MAJOR TECHNICAL SPECIFICATIONS

Item \ Area				EUROPE			
Body Type				4-Door Sedan			
Vehicle Grade				ENTRY		MID TECHNICAL	MID ELEGANT
Model Code				ZZT250R-AEMNKW	ZZT250L-AEMNKW	ZZT250L-AEMEKW	ZZT250L-AEMGKW
Major Dimension & Vehicle Weights	Overall	Length	mm (in.)	4630 (182.3)	4630 (182.3)	4630 (182.3)	4630 (182.3)
		Width	mm (in.)	1760 (69.3)	1760 (69.3)	1760 (69.3)	1760 (69.3)
		Height	mm (in.)	1480 (58.3)	1480 (58.3)	1480 (58.3)	1480 (58.3)
	Wheel Base		mm (in.)	2700 (106.3)	2700 (106.3)	2700 (106.3)	2700 (106.3)
	Tread	Front	mm (in.)	1506 (59.3)	1506 (59.3)	1506 (59.3)	1506 (59.3)
		Rear	mm (in.)	1510 (59.4)	1510 (59.4)	1510 (59.4)	1510 (59.4)
	Room	Length	mm (in.)	2090 (82.3)	2090 (82.3)	2090 (82.3)	2090 (82.3)
		Width	mm (in.)	1485 (58.5)	1485 (58.5)	1485 (58.5)	1485 (58.5)
		Height	mm (in.)	1210 (47.6), 1160 (45.7)*1	1210 (47.6), 1160 (45.7)*1	1210 (47.6), 1160 (45.7)*1	1210 (47.6), 1160 (45.7)*1
	Overhang	Front	mm (in.)	910 (35.8)	910 (35.8)	910 (35.8)	910 (35.8)
		Rear	mm (in.)	1025 (40.4)	1025 (40.4)	1025 (40.4)	1025 (40.4)
	Min. Running Ground Clearance		mm (in.)	135 (5.3), 155 (6.1)*2	135 (5.3), 155 (6.1)*2	135 (5.3), 155 (6.1)*2	135 (5.3), 155 (6.1)*2
	Angle of Approach		degrees	13.1°, 14.5°*2	13.1°, 14.5°*2	13.1°, 14.5°*2	13.1°, 14.5°*2
	Angle of Departure		degrees	18.7°, 20.1°*2	18.7°, 20.1°*2	18.7°, 20.1°*2	18.7°, 20.1°*2
	Curb Weight	Front	kg (lb)	710 - 750 (1565 - 1653)	710 - 750 (1565 - 1653)	720 - 750 (1587 - 1653)	720 - 750 (1587 - 1653)
		Rear	kg (lb)	535 - 560 (1179 - 1235)	535 - 560 (1179 - 1235)	550 - 570 (1213 - 1257)	550 - 570 (1213 - 1257)
		Total	kg (lb)	1245 - 1310 (2744 - 2888)	1245 - 1310 (2744 - 2888)	1270 - 1320 (2800 - 2910)	1270 - 1320 (2800 - 2910)
	Gross Vehicle Weight	Front	kg (lb)	840 (1852)	840 (1852)	840 (1852)	840 (1852)
		Rear	kg (lb)	980 (2161)	980 (2161)	980 (2161)	980 (2161)
		Total	kg (lb)	1820 (4013)	1820 (4013)	1820 (4013)	1820 (4013)
	Fuel Tank Capacity		ℓ (Imp.gal.)	60 (15.9, 13.2)	60 (15.9, 13.2)	60 (15.9, 13.2)	60 (15.9, 13.2)
	Luggage Compartment Capacity		m^3 (cu.ft.)	0.520 (18.4)	0.520 (18.4)	0.520 (18.4)	0.520 (18.4)
Performance	Max. Speed		km / h (mph)	190 (118)	190 (118)	190 (118)	190 (118)
	Max. Cruising Speed		km / h (mph)	—	—	—	—
	Acceleration	0 to 100 km / h	sec.	12.0	12.0	12.0	12.0
		0 to 400 m	sec.	18.1	18.1	18.1	18.1
	Max. Permissible Speed	1st Gear	km / h (mph)	47 (29)	47 (29)	47 (29)	47 (29)
		2nd Gear	km / h (mph)	87 (54)	87 (54)	87 (54)	87 (54)
		3rd Gear	km / h (mph)	127 (78)	127 (78)	127 (78)	127 (78)
		4th Gear	km / h (mph)	172 (106)	172 (106)	172 (106)	172 (106)
	Min. Turning Radius	Tire	m (ft.)	5.4 (17.7)	5.4 (17.7)	5.4 (17.7)	5.4 (17.7)
		Body	m (ft.)	5.75 (18.9)	5.75 (18.9)	5.75 (18.9)	5.75 (18.9)
Engine	Engine Type			3ZZ-FE	3ZZ-FE	3ZZ-FE	3ZZ-FE
	Valve Mechanism			16-Valve, DOHC	16-Valve, DOHC	16-Valve, DOHC	16-Valve, DOHC
	Bore x Stroke		mm (in.)	79.0 x 81.5 (3.11 x 3.21)	79.0 x 81.5 (3.11 x 3.21)	79.0 x 81.5 (3.11 x 3.21)	79.0 x 81.5 (3.11 x 3.21)
	Displacement		cm^3 (cu.in.)	1598 (97.5)	1598 (97.5)	1598 (97.5)	1598 (97.5)
	Compression Ratio			10.5	10.5	10.5	10.5
	Carburetor Type or Injection Pump Type (Diesel)			EFI	EFI	EFI	EFI
	Research Octane No. or Cetane No. (Diesel)			95 or higher	95 or higher	95 or higher	95 or higher
	Max. Output (EEC)		kW / rpm	81 / 6000	81 / 6000	81 / 6000	81 / 6000
	Max. Torque (EEC)		N·m / rpm	150 / 3800	150 / 3800	150 / 3800	150 / 3800
Engine Electric	Battery Capacity (5HR)		Voltage & Amp. hr.	12 - 32, 48*3	12 - 32, 48*3	12 - 32, 48*3	12 - 32, 48*3
	Alternator Output		Watts	960, 1080*3	960, 1080*3	960, 1080*3	960, 1080*3
	Starter Output		kW	1.3	1.3	1.3	1.3
Chassis	Clutch Type			Dry, Single Plate	Dry, Single Plate	Dry, Single Plate	Dry, Single Plate
	Transaxle Type			C50	C50	C50	C50
	Transmission Gear Ratio	In First		3.545	3.545	3.545	3.545
		In Second		1.904	1.904	1.904	1.904
		In Third		1.310	1.310	1.310	1.310
		In Fourth		0.969	0.969	0.969	0.969
		In Fifth		0.815	0.815	0.815	0.815
		In Reverse		3.250	3.250	3.250	3.250
	Counter Gear Ratio			—	—	—	—
	Differential Gear Ratio (Final)			4.312	4.312	4.312	4.312
	Brake Type	Front		Ventilated Disc	Ventilated Disc	Ventilated Disc	Ventilated Disc
		Rear		Solid Disc	Solid Disc	Solid Disc	Solid Disc
	Parking Brake Type			Drum	Drum	Drum	Drum
	Brake Booster Type and Size		in.	Tandem 8" + 9"	Tandem 8" + 9"	Tandem 8" + 9"	Tandem 8" + 9"
	Proportioning Valve Type			—	—	—	—
	Suspension Type	Front		MacPherson Strut.	MacPherson Strut.	MacPherson Strut.	MacPherson Strut.
		Rear		Double Wishbone	Double Wishbone	Double Wishbone	Double Wishbone
	Stabilizer Bar	Front		STD	STD	STD	STD
		Rear		STD	STD	STD	STD
	Steering Gear Type			Rack and Pinion	Rack and Pinion	Rack and Pinion	Rack and Pinion
	Steering Gear Ratio (Overall)			17.5	17.5	17.5	17.5
	Power Steering Type			EPS	EPS	EPS	EPS

*1: With Sun Roof
*2: Rough Road Pack
*3: Option

	EUROPE					
	4-Door Sedan					
	ENTRY				MID TECHNICAL	
	ZZT251R-AEMNKW	ZZT251L-AEMNKW	ZZT251R-AEPNKW	ZZT251L-AEPNKW	ZZT251R-AEMEKW	ZZT251L-AEMEKW
5	4630 (182.3)	4630 (182.3)	4630 (182.3)	4630 (182.3)	4630 (182.3)	4630 (182.3)
	1760 (69.3)	1760 (69.3)	1760 (69.3)	1760 (69.3)	1760 (69.3)	1760 (69.3)
	1480 (58.3)	1480 (58.3)	1480 (58.3)	1480 (58.3)	1480 (58.3)	1480 (58.3)
	2700 (106.3)	2700 (106.3)	2700 (106.3)	2700 (106.3)	2700 (106.3)	2700 (106.3)
	1506 (59.3)	1506 (59.3)	1506 (59.3)	1506 (59.3)	1506 (59.3)	1506 (59.3)
10	1510 (59.4)	1510 (59.4)	1510 (59.4)	1510 (59.4)	1510 (59.4)	1510 (59.4)
	2090 (82.3)	2090 (82.3)	2090 (82.3)	2090 (82.3)	2090 (82.3)	2090 (82.3)
	1485 (58.5)	1485 (58.5)	1485 (58.5)	1485 (58.5)	1485 (58.5)	1485 (58.5)
	1210 (47.6), 1160 (45.7)*1	1210 (47.6), 1160 (45.7)*1	1210 (47.6), 1160 (45.7)*1	1210 (47.6), 1160 (45.7)*1	1210 (47.6), 1160 (45.7)*1	1210 (47.6), 1160 (45.7)*1
	910 (35.8)	910 (35.8)	910 (35.8)	910 (35.8)	910 (35.8)	910 (35.8)
15	1025 (40.4)	1025 (40.4)	1025 (40.4)	1025 (40.4)	1025 (40.4)	1025 (40.4)
	135 (5.3), 155 (6.1)*2	135 (5.3), 155 (6.1)*2	135 (5.3), 155 (6.1)*2	135 (5.3), 155 (6.1)*2	135 (5.3), 155 (6.1)*2	135 (5.3), 155 (6.1)*2
	13.1°, 14.5°*2	13.1°, 14.5°*2	13.1°, 14.5°*2	13.1°, 14.5°*2	13.1°, 14.5°*2	13.1°, 14.5°*2
	18.7°, 20.1°*2	18.7°, 20.1°*2	18.7°, 20.1°*2	18.7°, 20.1°*2	18.7°, 20.1°*2	18.7°, 20.1°*2
	710 - 750 (1565 - 1653)	710 - 750 (1565 - 1653)	730 - 770 (1609 - 1698)	730 - 770 (1609 - 1698)	720 - 750 (1587 - 1653)	720 - 750 (1587 - 1653)
20	535 - 560 (1179 - 1235)	535 - 560 (1179 - 1235)	535 - 560 (1179 - 1235)	535 - 560 (1179 - 1235)	550 - 570 (1213 - 1257)	550 - 570 (1213 - 1257)
	1245 - 1310 (2744 - 2888)	1245 - 1310 (2744 - 2888)	1265 - 1330 (2788 - 2932)	1265 - 1330 (2788 - 2932)	1270 - 1320 (2800 - 2910)	1270 - 1320 (2800 - 2910)
	840 (1852)	840 (1852)	840 (1852)	840 (1852)	840 (1852)	840 (1852)
	980 (2161)	980 (2161)	980 (2161)	980 (2161)	980 (2161)	980 (2161)
	1820 (4013)	1820 (4013)	1820 (4013)	1820 (4013)	1820 (4013)	1820 (4013)
25	60 (15.9, 13.2)	60 (15.9, 13.2)	60 (15.9, 13.2)	60 (15.9, 13.2)	60 (15.9, 13.2)	60 (15.9, 13.2)
	0.520 (18.4)	0.520 (18.4)	0.520 (18.4)	0.520 (18.4)	0.520 (18.4)	0.520 (18.4)
	200 (124)	200 (124)	185 (115)	185 (115)	200 (124)	200 (124)
	—	—	—	—	—	—
	10.3	10.3	11.6	11.6	10.3	10.3
30	17.1	17.1	17.9	17.9	17.1	17.1
	51 (31)	51 (31)	59 (36)	59 (36)	51 (31)	51 (31)
	95 (59)	95 (59)	109 (67)	109 (67)	95 (59)	95 (59)
	139 (86)	139 (86)	169 (105)	169 (105)	139 (86)	139 (86)
	176 (109)	176 (109)	—	—	176 (109)	176 (109)
35	5.4 (17.7)	5.4 (17.7)	5.4 (17.7)	5.4 (17.7)	5.4 (17.7)	5.4 (17.7)
	5.75 (18.9)	5.75 (18.9)	5.75 (18.9)	5.75 (18.9)	5.75 (18.9)	5.75 (18.9)
	1ZZ-FE	1ZZ-FE	1ZZ-FE	1ZZ-FE	1ZZ-FE	1ZZ-FE
	16-Valve, DOHC	16-Valve, DOHC	16-Valve, DOHC	16-Valve, DOHC	16-Valve, DOHC	16-Valve, DOHC
	79.0 x 91.5 (3.11 x 3.60)	79.0 x 91.5 (3.11 x 3.60)	79.0 x 91.5 (3.11 x 3.60)	79.0 x 91.5 (3.11 x 3.60)	79.0 x 91.5 (3.11 x 3.60)	79.0 x 91.5 (3.11 x 3.60)
40	1794 (109.5)	1794 (109.5)	1794 (109.5)	1794 (109.5)	1794 (109.5)	1794 (109.5)
	10.0	10.0	10.0	10.0	10.0	10.0
	EFI	EFI	EFI	EFI	EFI	EFI
	95 or higher	95 or higher	95 or higher	95 or higher	95 or higher	95 or higher
	95 / 6000	95 / 6000	95 / 6000	95 / 6000	95 / 6000	95 / 6000
45	170 / 4200	170 / 4200	170 / 4200	170 / 4200	170 / 4200	170 / 4200
	12 - 32, 48*3	12 - 32, 48*3	12 - 32, 48*3	12 - 32, 48*3	12 - 32, 48*3	12 - 32, 48*3
	960, 1080*3	960, 1080*3	960, 1080*3	960, 1080*3	960, 1080*3	960, 1080*3
	1.3	1.3	1.3	1.3	1.3	1.3
	Dry, Single Plate	Dry, Single Plate	—	—	Dry, Single Plate	Dry, Single Plate
50	C250	C250	U341E	U341E	C250	C250
	3.545	3.545	2.847	2.847	3.545	3.545
	1.904	1.904	1.552	1.552	1.904	1.904
	1.310	1.310	1.000	1.000	1.310	1.310
	1.031	1.031	0.700	0.700	1.031	1.031
55	0.815	0.815	—	—	0.815	0.815
	3.250	3.250	2.343	2.343	3.250	3.250
	—	—	—	—	—	—
	3.941	3.941	4.237	4.237	3.941	3.941
	Ventilated Disc	Ventilated Disc	Ventilated Disc	Ventilated Disc	Ventilated Disc	Ventilated Disc
60	Solid Disc	Solid Disc	Solid Disc	Solid Disc	Solid Disc	Solid Disc
	Drum	Drum	Drum	Drum	Drum	Drum
	Tandem 8” + 9”	Tandem 8” + 9”	Tandem 8” + 9”	Tandem 8” + 9”	Tandem 8” + 9”	Tandem 8” + 9”
	—	—	—	—	—	—
	MacPherson Strut.	MacPherson Strut.	MacPherson Strut.	MacPherson Strut.	MacPherson Strut.	MacPherson Strut.
65	Double Wishbone	Double Wishbone	Double Wishbone	Double Wishbone	Double Wishbone	Double Wishbone
	STD	STD	STD	STD	STD	STD
	STD	STD	STD	STD	STD	STD
	Rack and Pinion	Rack and Pinion	Rack and Pinion	Rack and Pinion	Rack and Pinion	Rack and Pinion
	17.5	17.5	17.5	17.5	17.5	17.5
70	EPS	EPS	EPS	EPS	EPS	EPS

Item \ Area				EUROPE			
Body Type				4-Door Sedan			
Vehicle Grade				MID TECHNICAL		MID ELEGANT	
Model Code				ZZT251R-AEPEKW	ZZT251L-AEPEKW	ZZT251R-AEMGKW	ZZT251L-AEMGKW
Major Dimension & Vehicle Weights	Overall	Length	mm (in.)	4630 (182.3)	4630 (182.3)	4630 (182.3)	4630 (182.3)
		Width	mm (in.)	1760 (69.3)	1760 (69.3)	1760 (69.3)	1760 (69.3)
		Height	mm (in.)	1480 (58.3)	1480 (58.3)	1480 (58.3)	1480 (58.3)
	Wheel Base		mm (in.)	2700 (106.3)	2700 (106.3)	2700 (106.3)	2700 (106.3)
	Tread	Front	mm (in.)	1506 (59.3)	1506 (59.3)	1506 (59.3)	1506 (59.3)
		Rear	mm (in.)	1510 (59.4)	1510 (59.4)	1510 (59.4)	1510 (59.4)
	Room	Length	mm (in.)	2090 (82.3)	2090 (82.3)	2090 (82.3)	2090 (82.3)
		Width	mm (in.)	1485 (58.5)	1485 (58.5)	1485 (58.5)	1485 (58.5)
		Height	mm (in.)	1210 (47.6), 1160 (45.7)*1	1210 (47.6), 1160 (45.7)*1	1210 (47.6), 1160 (45.7)*1	1210 (47.6), 1160 (45.7)*1
	Overhang	Front	mm (in.)	910 (35.8)	910 (35.8)	910 (35.8)	910 (35.8)
		Rear	mm (in.)	1025 (40.4)	1025 (40.4)	1025 (40.4)	1025 (40.4)
	Min. Running Ground Clearance		mm (in.)	135 (5.3), 155 (6.1)*2	135 (5.3), 155 (6.1)*2	135 (5.3), 155 (6.1)*2	135 (5.3), 155 (6.1)*2
	Angle of Approach		degrees	13.1°, 14.5°*2	13.1°, 14.5°*2	13.1°, 14.5°*2	13.1°, 14.5°*2
	Angle of Departure		degrees	18.7°, 20.1°*2	18.7°, 20.1°*2	18.7°, 20.1°*2	18.7°, 20.1°*2
	Curb Weight	Front	kg (lb)	740 - 770 (1631 - 1698)	740 - 770 (1631 - 1698)	720 - 750 (1587 - 1653)	720 - 750 (1587 - 1653)
		Rear	kg (lb)	550 - 575 (1213 - 1268)	550 - 575 (1213 - 1268)	550 - 570 (1213 - 1257)	550 - 570 (1213 - 1257)
		Total	kg (lb)	1290 - 1345 (2844 - 2966)	1290 - 1345 (2844 - 2966)	1270 - 1320 (2800 - 2910)	1270 - 1320 (2800 - 2910)
	Gross Vehicle Weight	Front	kg (lb)	840 (1852)	840 (1852)	840 (1852)	840 (1852)
		Rear	kg (lb)	980 (2161)	980 (2161)	980 (2161)	980 (2161)
		Total	kg (lb)	1820 (4013)	1820 (4013)	1820 (4013)	1820 (4013)
	Fuel Tank Capacity		ℓ (Imp.gal.)	60 (15.9, 13.2)	60 (15.9, 13.2)	60 (15.9, 13.2)	60 (15.9, 13.2)
	Luggage Compartment Capacity		m^3 (cu.ft.)	0.520 (18.4)	0.520 (18.4)	0.520 (18.4)	0.520 (18.4)
Performance	Max. Speed		km / h (mph)	185 (115)	185 (115)	200 (124)	200 (124)
	Max. Cruising Speed		km / h (mph)	—	—	—	—
	Acceleration	0 to 100 km / h	sec.	11.6	11.6	10.3	10.3
		0 to 400 m	sec.	17.9	17.9	17.1	17.1
	Max. Permissible Speed	1st Gear	km / h (mph)	59 (36)	59 (36)	51 (31)	51 (31)
		2nd Gear	km / h (mph)	109 (67)	109 (67)	95 (59)	95 (59)
		3rd Gear	km / h (mph)	169 (105)	169 (105)	139 (86)	139 (86)
		4th Gear	km / h (mph)	—	—	176 (109)	176 (109)
	Min. Turning Radius	Tire	m (ft.)	5.4 (17.7)	5.4 (17.7)	5.4 (17.7)	5.4 (17.7)
		Body	m (ft.)	5.75 (18.9)	5.75 (18.9)	5.75 (18.9)	5.75 (18.9)
Engine	Engine Type			1ZZ-FE	1ZZ-FE	1ZZ-FE	1ZZ-FE
	Valve Mechanism			16-Valve, DOHC	16-Valve, DOHC	16-Valve, DOHC	16-Valve, DOHC
	Bore x Stroke		mm (in.)	79.0 x 91.5 (3.11 x 3.60)	79.0 x 91.5 (3.11 x 3.60)	79.0 x 91.5 (3.11 x 3.60)	79.0 x 91.5 (3.11 x 3.60)
	Displacement		cm^3 (cu.in.)	1794 (109.5)	1794 (109.5)	1794 (109.5)	1794 (109.5)
	Compression Ratio			10.0	10.0	10.0	10.0
	Carburetor Type or Injection Pump Type (Diesel)			EFI	EFI	EFI	EFI
	Research Octane No. or Cetane No. (Diesel)			95 or higher	95 or higher	95 or higher	95 or higher
	Max. Output (EEC)		kW / rpm	95 / 6000	95 / 6000	95 / 6000	95 / 6000
	Max. Torque (EEC)		N·m / rpm	170 / 4200	170 / 4200	170 / 4200	170 / 4200
Engine Electric	Battery Capacity (5HR)		Voltage & Amp. hr.	12 - 32, 48*3	12 - 32, 48*3	12 - 32, 48*3	12 - 32, 48*3
	Alternator Output		Watts	960, 1080*3	960, 1080*3	960, 1080*3	960, 1080*3
	Starter Output		kW	1.3	1.3	1.3	1.3
Chassis	Clutch Type			—	—	Dry, Single Plate	Dry, Single Plate
	Transaxle Type			U341E	U341E	C250	C250
	Transmission Gear Ratio	In First		2.847	2.847	3.545	3.545
		In Second		1.552	1.552	1.904	1.904
		In Third		1.000	1.000	1.310	1.310
		In Fourth		0.700	0.700	1.031	1.031
		In Fifth		—	—	0.815	0.815
		In Reverse		2.343	2.343	3.250	3.250
	Counter Gear Ratio			—	—	—	—
	Differential Gear Ratio (Final)			4.237	4.237	3.941	3.941
	Brake Type	Front		Ventilated Disc	Ventilated Disc	Ventilated Disc	Ventilated Disc
		Rear		Solid Disc	Solid Disc	Solid Disc	Solid Disc
	Parking Brake Type			Drum	Drum	Drum	Drum
	Brake Booster Type and Size		in.	Tandem 8" + 9"	Tandem 8" + 9"	Tandem 8" + 9"	Tandem 8" + 9"
	Proportioning Valve Type			—	—	—	—
	Suspension Type	Front		MacPherson Strut.	MacPherson Strut.	MacPherson Strut.	MacPherson Strut.
		Rear		Double Wishbone	Double Wishbone	Double Wishbone	Double Wishbone
	Stabilizer Bar	Front		STD	STD	STD	STD
		Rear		STD	STD	STD	STD
	Steering Gear Type			Rack and Pinion	Rack and Pinion	Rack and Pinion	Rack and Pinion
	Steering Gear Ratio (Overall)			17.5	17.5	17.5	17.5
	Power Steering Type			EPS	EPS	EPS	EPS

*1: With Sun Roof
*2: Rough Road Pack
*3: Option

EUROPE					
4-Door Sedan					
MID ELEGANT		MID TECHNICAL		MID ELEGANT	
ZZT251R-AEPGKW	ZZT251L-AEPGKW	AZT250L-AEMEKW	AZT250L-AEPEKW	AZT250L-AEMGKW	AZT250L-AEPGKW
4630 (182.3)	4630 (182.3)	4630 (182.3)	4630 (182.3)	4630 (182.3)	4630 (182.3)
1760 (69.3)	1760 (69.3)	1760 (69.3)	1760 (69.3)	1760 (69.3)	1760 (69.3)
1480 (58.3)	1480 (58.3)	1480 (58.3)	1480 (58.3)	1480 (58.3)	1480 (58.3)
2700 (106.3)	2700 (106.3)	2700 (106.3)	2700 (106.3)	2700 (106.3)	2700 (106.3)
1506 (59.3)	1506 (59.3)	1506 (59.3)	1506 (59.3)	1506 (59.3)	1506 (59.3)
1510 (59.4)	1510 (59.4)	1510 (59.4)	1510 (59.4)	1510 (59.4)	1510 (59.4)
2090 (82.3)	2090 (82.3)	2090 (82.3)	2090 (82.3)	2090 (82.3)	2090 (82.3)
1485 (58.5)	1485 (58.5)	1485 (58.5)	1485 (58.5)	1485 (58.5)	1485 (58.5)
1210 (47.6), 1160 (45.7)*1	1210 (47.6), 1160 (45.7)*1	1210 (47.6), 1160 (45.7)*1	1210 (47.6), 1160 (45.7)*1	1210 (47.6), 1160 (45.7)*1	1210 (47.6), 1160 (45.7)*1
910 (35.8)	910 (35.8)	910 (35.8)	910 (35.8)	910 (35.8)	910 (35.8)
1025 (40.4)	1025 (40.4)	1025 (40.4)	1025 (40.4)	1025 (40.4)	1025 (40.4)
135 (5.3), 155 (6.1)*2	135 (5.3), 155 (6.1)*2	135 (5.3), 155 (6.1)*2	135 (5.3), 155 (6.1)*2	135 (5.3), 155 (6.1)*2	135 (5.3), 155 (6.1)*2
13.1°, 14.5°*2	13.1°, 14.5°*2	13.1°, 14.5°*2	13.1°, 14.5°*2	13.1°, 14.5°*2	13.1°, 14.5°*2
18.7°, 20.1°*2	18.7°, 20.1°*2	18.7°, 20.1°*2	18.7°, 20.1°*2	18.7°, 20.1°*2	18.7°, 20.1°*2
740 - 770 (1631 - 1698)	740 - 770 (1631 - 1698)	765 - 800 (1687 - 1764)	795 - 830 (1753 - 1830)	765 - 800 (1687 - 1764)	795 - 830 (1753 - 1830)
550 - 575 (1213 - 1268)	550 - 575 (1213 - 1268)	540 - 555 (1190 - 1224)	540 - 555 (1190 - 1224)	540 - 555 (1190 - 1224)	540 - 555 (1190 - 1224)
1290 - 1345 (2844 - 2966)	1290 - 1345 (2844 - 2966)	1305 - 1355 (2877 - 2988)	1335 - 1385 (2943 - 3054)	1305 - 1355 (2877 - 2988)	1335 - 1385 (2943 - 3054)
840 (1852)	840 (1852)	915 (2017)	915 (2017)	915 (2017)	915 (2017)
980 (2161)	980 (2161)	975 (2150)	975 (2150)	975 (2150)	975 (2150)
1820 (4013)	1820 (4013)	1890 (4167)	1890 (4167)	1890 (4167)	1890 (4167)
60 (15.9, 13.2)	60 (15.9, 13.2)	60 (15.9, 13.2)	60 (15.9, 13.2)	60 (15.9, 13.2)	60 (15.9, 13.2)
0.520 (18.4)	0.520 (18.4)	0.520 (18.4)	0.520 (18.4)	0.520 (18.4)	0.520 (18.4)
185 (115)	185 (115)	200 (124)	190 (118)	200 (124)	190 (118)
—	—	—	—	—	—
11.6	11.6	9.5	11.1	9.5	11.1
17.9	17.9	16.7	17.6	16.7	17.6
59 (36)	59 (36)	51 (31)	62 (38)	51 (31)	62 (38)
109 (67)	109 (67)	88 (54)	111 (68)	88 (54)	111 (68)
169 (105)	169 (105)	136 (84)	174 (108)	136 (84)	174 (108)
—	—	177 (109)	—	177 (109)	—
5.4 (17.7)	5.4 (17.7)	5.6 (18.4)	5.6 (18.4)	5.6 (18.4)	5.6 (18.4)
5.75 (18.9)	5.75 (18.9)	5.995 (19.7)	5.995 (19.7)	5.995 (19.7)	5.995 (19.7)
1ZZ-FE	1ZZ-FE	1AZ-FE	1AZ-FE	1AZ-FE	1AZ-FE
16-Valve, DOHC	16-Valve, DOHC	16-Valve, DOHC	16-Valve, DOHC	16-Valve, DOHC	16-Valve, DOHC
79.0 x 91.5 (3.11 x 3.60)	79.0 x 91.5 (3.11 x 3.60)	86.0 x 86.0 (3.39 x 3.39)	86.0 x 86.0 (3.39 x 3.39)	86.0 x 86.0 (3.39 x 3.39)	86.0 x 86.0 (3.39 x 3.39)
1794 (109.5)	1794 (109.5)	1998 (121.9)	1998 (121.9)	1998 (121.9)	1998 (121.9)
10.0	10.0	9.8	9.8	9.8	9.8
EFI	EFI	EFI	EFI	EFI	EFI
95 or higher	95 or higher	95 or higher	95 or higher	95 or higher	95 or higher
95 / 6000	95 / 6000	108 / 6000	108 / 6000	108 / 6000	108 / 6000
170 / 4200	170 / 4200	192 / 4000	192 / 4000	192 / 4000	192 / 4000
12 - 32, 48*3	12 - 32, 48*3	12 - 32, 48*3	12 - 32, 48*3	12 - 32, 48*3	12 - 32, 48*3
960, 1080*3	960, 1080*3	1200	1200	1200	1200
1.3	1.3	1.3	1.3	1.3	1.3
—	—	Dry, Single Plate	—	Dry, Single Plate	—
U341E	U341E	E354	U241E	E354	U241E
2.847	2.847	3.538	3.943	3.538	3.943
1.552	1.552	2.054	2.197	2.054	2.197
1.000	1.000	1.333	1.413	1.333	1.413
0.700	0.700	1.028	1.020	1.028	1.020
—	—	0.820	—	0.820	—
2.343	2.343	3.583	3.145	3.583	3.145
—	—	—	—	—	—
4.237	4.237	3.944	2.923	3.944	2.923
Ventilated Disc	Ventilated Disc	Ventilated Disc	Ventilated Disc	Ventilated Disc	Ventilated Disc
Solid Disc	Solid Disc	Solid Disc	Solid Disc	Solid Disc	Solid Disc
Drum	Drum	Drum	Drum	Drum	Drum
Tandem 8” + 9”	Tandem 8” + 9”	Tandem 8” + 9”	Tandem 8” + 9”	Tandem 8” + 9”	Tandem 8” + 9”
—	—	—	—	—	—
MacPherson Strut.	MacPherson Strut.	MacPherson Strut.	MacPherson Strut.	MacPherson Strut.	MacPherson Strut.
Double Wishbone	Double Wishbone	Double Wishbone	Double Wishbone	Double Wishbone	Double Wishbone
STD	STD	STD	STD	STD	STD
STD	STD	STD	STD	STD	STD
Rack and Pinion	Rack and Pinion	Rack and Pinion	Rack and Pinion	Rack and Pinion	Rack and Pinion
17.5	17.5	16.1	16.1	16.1	16.1
EPS	EPS	Integral Type	Integral Type	Integral Type	Integral Type

Item \ Area				EUROPE			
Body Type				4-Door Sedan			
Vehicle Grade				MID TECHNICAL			
Model Code				AZT250R-AEMEHW	AZT250L-AEMEHW	AZT250R-AEPEHW	AZT250L-AEPEHW
Major Dimension & Vehicle Weights	Overall	Length	mm (in.)	4630 (182.3)	4630 (182.3)	4630 (182.3)	4630 (182.3)
		Width	mm (in.)	1760 (69.3)	1760 (69.3)	1760 (69.3)	1760 (69.3)
		Height	mm (in.)	1480 (58.3)	1480 (58.3)	1480 (58.3)	1480 (58.3)
	Wheel Base		mm (in.)	2700 (106.3)	2700 (106.3)	2700 (106.3)	2700 (106.3)
	Tread	Front	mm (in.)	1506 (59.3)	1506 (59.3)	1506 (59.3)	1506 (59.3)
		Rear	mm (in.)	1510 (59.4)	1510 (59.4)	1510 (59.4)	1510 (59.4)
	Room	Length	mm (in.)	2090 (82.3)	2090 (82.3)	2090 (82.3)	2090 (82.3)
		Width	mm (in.)	1485 (58.5)	1485 (58.5)	1485 (58.5)	1485 (58.5)
		Height	mm (in.)	1210 (47.6), 1160 (45.7)*1	1210 (47.6), 1160 (45.7)*1	1210 (47.6), 1160 (45.7)*1	1210 (47.6), 1160 (45.7)*1
	Overhang	Front	mm (in.)	910 (35.8)	910 (35.8)	910 (35.8)	910 (35.8)
		Rear	mm (in.)	1025 (40.4)	1025 (40.4)	1025 (40.4)	1025 (40.4)
	Min. Running Ground Clearance		mm (in.)	135 (5.3), 155 (6.1)*2	135 (5.3), 155 (6.1)*2	135 (5.3), 155 (6.1)*2	135 (5.3), 155 (6.1)*2
	Angle of Approach		degrees	13.1°, 14.5°*2	13.1°, 14.5°*2	13.1°, 14.5°*2	13.1°, 14.5°*2
	Angle of Departure		degrees	18.7°, 20.1°*2	18.7°, 20.1°*2	18.7°, 20.1°*2	18.7°, 20.1°*2
	Curb Weight	Front	kg (lb)	770 - 800 (1698 - 1764)	770 - 800 (1698 - 1764)	800 - 830 (1764 - 1830)	800 - 830 (1764 - 1830)
		Rear	kg (lb)	560 - 575 (1235 - 1268)	560 - 575 (1235 - 1268)	560 - 575 (1235 - 1268)	560 - 575 (1235 - 1268)
		Total	kg (lb)	1330 - 1375 (2932 - 3032)	1330 - 1375 (2932 - 3032)	1360 - 1405 (2999 - 3098)	1360 - 1405 (2999 - 3098)
	Gross Vehicle Weight	Front	kg (lb)	915 (2017)	915 (2017)	915 (2017)	915 (2017)
		Rear	kg (lb)	980 (2161)	980 (2161)	980 (2161)	980 (2161)
		Total	kg (lb)	1895 (4178)	1895 (4178)	1895 (4178)	1895 (4178)
	Fuel Tank Capacity		ℓ (Imp.gal.)	60 (15.9, 13.2)	60 (15.9, 13.2)	60 (15.9, 13.2)	60 (15.9, 13.2)
	Luggage Compartment Capacity		m^3 (cu.ft.)	0.520 (18.4)	0.520 (18.4)	0.520 (18.4)	0.520 (18.4)
Performance	Max. Speed		km / h (mph)	205 (127)	205 (127)	195 (121)	195 (121)
	Max. Cruising Speed		km / h (mph)	—	—	—	—
	Acceleration	0 to 100 km / h	sec.	9.4	9.4	11.1	11.1
		0 to 400 m	sec.	16.6	16.6	17.6	17.6
	Max. Permissible Speed	1st Gear	km / h (mph)	56 (34)	56 (34)	63 (39)	63 (39)
		2nd Gear	km / h (mph)	96 (59)	96 (59)	114 (71)	114 (71)
		3rd Gear	km / h (mph)	149 (92)	149 (92)	177 (110)	177 (110)
		4th Gear	km / h (mph)	193 (119)	193 (119)	—	—
	Min. Turning Radius	Tire	m (ft.)	5.6 (18.4)	5.6 (18.4)	5.6 (18.4)	5.6 (18.4)
		Body	m (ft.)	5.995 (19.7)	5.995 (19.7)	5.995 (19.7)	5.995 (19.7)
Engine	Engine Type			1AZ-FSE	1AZ-FSE	1AZ-FSE	1AZ-FSE
	Valve Mechanism			16-Valve, DOHC	16-Valve, DOHC	16-Valve, DOHC	16-Valve, DOHC
	Bore x Stroke		mm (in.)	86.0 x 86.0 (3.39 x 3.39)	86.0 x 86.0 (3.39 x 3.39)	86.0 x 86.0 (3.39 x 3.39)	86.0 x 86.0 (3.39 x 3.39)
	Displacement		cm^3 (cu.in.)	1998 (121.9)	1998 (121.9)	1998 (121.9)	1998 (121.9)
	Compression Ratio			11.0	11.0	11.0	11.0
	Carburetor Type or Injection Pump Type (Diesel)			EFI	EFI	EFI	EFI
	Research Octane No. or Cetane No. (Diesel)			95 or higher	95 or higher	95 or higher	95 or higher
	Max. Output (EEC)		kW / rpm	108 / 5700	108 / 5700	108 / 5700	108 / 5700
	Max. Torque (EEC)		N·m / rpm	196 / 4000	196 / 4000	196 / 4000	196 / 4000
Engine Electric	Battery Capacity (5HR)		Voltage & Amp. hr.	12 - 32, 48*3	12 - 32, 48*3	12 - 48	12 - 48
	Alternator Output		Watts	1200	1200	1200	1200
	Starter Output		kW	1.3, 1.6*3	1.3, 1.6*3	1.6	1.6
Chassis	Clutch Type			Dry, Single Plate	Dry, Single Plate	—	—
	Transaxle Type			E354	E354	U241E*4	U241E*4
	Transmission Gear Ratio	In First		3.538	3.538	3.943	3.943
		In Second		2.054	2.054	2.197	2.197
		In Third		1.333	1.333	1.413	1.413
		In Fourth		1.028	1.028	1.020	1.020
		In Fifth		0.820	0.820	—	—
		In Reverse		3.583	3.583	3.145	3.145
	Counter Gear Ratio			—	—	—	—
	Differential Gear Ratio (Final)			3.684	3.684	2.923	2.923
	Brake Type	Front		Ventilated Disc	Ventilated Disc	Ventilated Disc	Ventilated Disc
		Rear		Solid Disc	Solid Disc	Solid Disc	Solid Disc
	Parking Brake Type			Drum	Drum	Drum	Drum
	Brake Booster Type and Size		in.	Tandem 8" + 9"	Tandem 8" + 9"	Tandem 8" + 9"	Tandem 8" + 9"
	Proportioning Valve Type			—	—	—	—
	Suspension Type	Front		MacPherson Strut.	MacPherson Strut.	MacPherson Strut.	MacPherson Strut.
		Rear		Double Wishbone	Double Wishbone	Double Wishbone	Double Wishbone
	Stabilizer Bar	Front		STD	STD	STD	STD
		Rear		STD	STD	STD	STD
	Steering Gear Type			Rack and Pinion	Rack and Pinion	Rack and Pinion	Rack and Pinion
	Steering Gear Ratio (Overall)			16.1	16.1	16.1	16.1
	Power Steering Type			Integral Type	Integral Type	Integral Type	Integral Type

*1: With Sun Roof
*2: Rough Road Pack
*3: Option
*4: Snow Mord Type

EUROPE					
4-Door Sedan					
MID ELEGANT				ENTRY	
AZT250R-AEMGHW	AZT250L-AEMGHW	AZT250R-AEPGHW	AZT250L-AEPGHW	CDT250R-AEMNYW	CDT250L-AEMNYW
4630 (182.3)	4630 (182.3)	4630 (182.3)	4630 (182.3)	4630 (182.3)	4630 (182.3)
1760 (69.3)	1760 (69.3)	1760 (69.3)	1760 (69.3)	1760 (69.3)	1760 (69.3)
1480 (58.3)	1480 (58.3)	1480 (58.3)	1480 (58.3)	1480 (58.3)	1480 (58.3)
2700 (106.3)	2700 (106.3)	2700 (106.3)	2700 (106.3)	2700 (106.3)	2700 (106.3)
1506 (59.3)	1506 (59.3)	1506 (59.3)	1506 (59.3)	1506 (59.3)	1506 (59.3)
1510 (59.4)	1510 (59.4)	1510 (59.4)	1510 (59.4)	1510 (59.4)	1510 (59.4)
2090 (82.3)	2090 (82.3)	2090 (82.3)	2090 (82.3)	2090 (82.3)	2090 (82.3)
1485 (58.5)	1485 (58.5)	1485 (58.5)	1485 (58.5)	1485 (58.5)	1485 (58.5)
1210 (47.6), 1160 (45.7)*1	1210 (47.6), 1160 (45.7)*1	1210 (47.6), 1160 (45.7)*1	1210 (47.6), 1160 (45.7)*1	1210 (47.6), 1160 (45.7)*1	1210 (47.6), 1160 (45.7)*1
910 (35.8)	910 (35.8)	910 (35.8)	910 (35.8)	910 (35.8)	910 (35.8)
1025 (40.4)	1025 (40.4)	1025 (40.4)	1025 (40.4)	1025 (40.4)	1025 (40.4)
135 (5.3), 155 (6.1)*2	135 (5.3), 155 (6.1)*2	135 (5.3), 155 (6.1)*2	135 (5.3), 155 (6.1)*2	135 (5.3), 155 (6.1)*2	135 (5.3), 155 (6.1)*2
13.1°, 14.5°*2	13.1°, 14.5°*2	13.1°, 14.5°*2	13.1°, 14.5°*2	13.1°, 14.5°*2	13.1°, 14.5°*2
18.7°, 20.1°*2	18.7°, 20.1°*2	18.7°, 20.1°*2	18.7°, 20.1°*2	18.7°, 20.1°*2	18.7°, 20.1°*2
770 - 800 (1698 - 1764)	770 - 800 (1698 - 1764)	800 - 830 (1764 - 1830)	800 - 830 (1764 - 1830)	845 - 895 (1863 - 1973)	845 - 895 (1863 - 1973)
560 - 575 (1235 - 1268)	560 - 575 (1235 - 1268)	560 - 575 (1235 - 1268)	560 - 575 (1235 - 1268)	535 - 550 (1179 - 1213)	535 - 550 (1179 - 1213)
1330 - 1375 (2932 - 3031)	1330 - 1375 (2932 - 3031)	1360 - 1405 (2998 - 3097)	1360 - 1405 (2998 - 3097)	1380 - 1445 (3042 - 3186)	1380 - 1445 (3042 - 3186)
915 (2017)	915 (2017)	915 (2017)	915 (2017)	985 (2172)	985 (2172)
980 (2161)	980 (2161)	980 (2161)	980 (2161)	985 (2172)	985 (2172)
1895 (4178)	1895 (4178)	1895 (4178)	1895 (4178)	1970 (4343)	1970 (4343)
60 (15.9, 13.2)	60 (15.9, 13.2)	60 (15.9, 13.2)	60 (15.9, 13.2)	60 (15.9, 13.2)	60 (15.9, 13.2)
0.520 (18.4)	0.520 (18.4)	0.520 (18.4)	0.520 (18.4)	0.520 (18.4)	0.520 (18.4)
205 (127)	205 (127)	195 (121)	195 (121)	195 (121)	195 (121)
—	—	—	—	—	—
9.4	9.4	11.1	11.1	11.2	11.2
16.6	16.6	17.6	17.6	17.7	17.7
56 (34)	56 (34)	63 (39)	63 (39)	45 (27)	45 (27)
96 (59)	96 (59)	114 (71)	114 (71)	84 (52)	84 (52)
149 (92)	149 (92)	177 (110)	177 (110)	128 (79)	128 (79)
193 (119)	193 (119)	—	—	176 (109)	176 (109)
5.6 (18.4)	5.6 (18.4)	5.6 (18.4)	5.6 (18.4)	5.6 (18.4)	5.6 (18.4)
5.995 (19.7)	5.995 (19.7)	5.995 (19.7)	5.995 (19.7)	5.995 (19.7)	5.995 (19.7)
1AZ-FSE	1AZ-FSE	1AZ-FSE	1AZ-FSE	1CD-FTV	1CD-FTV
16-Valve, DOHC	16-Valve, DOHC	16-Valve, DOHC	16-Valve, DOHC	16-Valve, DOHC	16-Valve, DOHC
86.0 x 86.0 (3.39 x 3.39)	86.0 x 86.0 (3.39 x 3.39)	86.0 x 86.0 (3.39 x 3.39)	86.0 x 86.0 (3.39 x 3.39)	82.2 x 94.0 (3.24 x 3.70)	82.2 x 94.0 (3.24 x 3.70)
1998 (121.9)	1998 (121.9)	1998 (121.9)	1998 (121.9)	1995 (121.7)	1995 (121.7)
11.0	11.0	11.0	11.0	17.8	17.8
EFI	EFI	EFI	EFI	Common-Rail Type	Common-Rail Type
95 or higher	95 or higher	95 or higher	95 or higher	48 or higher	48 or higher
108 / 5700	108 / 5700	108 / 5700	108 / 5700	85 / 3600	85 / 3600
196 / 4000	196 / 4000	196 / 4000	196 / 4000	280 / 2000 - 2200	280 / 2000 - 2200
12 - 32, 48*3	12 - 32, 48*3	12 - 48	12 - 48	12 - 60	12 - 60
1200	1200	1200	1200	1200, 1080*3	1200, 1080*3
1.3, 1.6*3	1.3, 1.6*3	1.6	1.6	2.0	2.0
Dry, Single Plate	Dry, Single Plate	—	—	Dry, Single Plate	Dry, Single Plate
E354	E354	U241E*4	U241E*4	E357	E357
3.538	3.538	3.943	3.943	3.538	3.538
2.054	2.054	2.197	2.197	1.913	1.913
1.333	1.333	1.413	1.413	1.258	1.258
1.028	1.028	1.020	1.020	0.918	0.918
0.820	0.820	—	—	0.690	0.690
3.583	3.583	3.145	3.145	3.583	3.583
—	—	—	—	—	—
3.684	3.684	2.923	2.923	3.684	3.684
Ventilated Disc	Ventilated Disc	Ventilated Disc	Ventilated Disc	Ventilated Disc	Ventilated Disc
Solid Disc	Solid Disc	Solid Disc	Solid Disc	Solid Disc	Solid Disc
Drum	Drum	Drum	Drum	Drum	Drum
Tandem 8” + 9”	Tandem 8” + 9”	Tandem 8” + 9”	Tandem 8” + 9”	Tandem 8” + 9”	Tandem 8” + 9”
—	—	—	—	—	—
MacPherson Strut.	MacPherson Strut.	MacPherson Strut.	MacPherson Strut.	MacPherson Strut.	MacPherson Strut.
Double Wishbone	Double Wishbone	Double Wishbone	Double Wishbone	Double Wishbone	Double Wishbone
STD	STD	STD	STD	STD	STD
STD	STD	STD	STD	STD	STD
Rack and Pinion	Rack and Pinion	Rack and Pinion	Rack and Pinion	Rack and Pinion	Rack and Pinion
16.1	16.1	16.1	16.1	16.1	16.1
Integral Type	Integral Type	Integral Type	Integral Type	Integral Type	Integral Type

Item \ Area				EUROPE			
Body Type				4-Door Sedan			
Vehicle Grade				MID TECHNICAL		MID ELEGANT	
Model Code				CDT250R-AEMEYW	CDT250L-AEMEYW	CDT250R-AEMGYW	CDT250L-AEMGYW
Major Dimension & Vehicle Weights	Overall	Length	mm (in.)	4630 (182.3)	4630 (182.3)	4630 (182.3)	4630 (182.3)
		Width	mm (in.)	1760 (69.3)	1760 (69.3)	1760 (69.3)	1760 (69.3)
		Height	mm (in.)	1480 (58.3)	1480 (58.3)	1480 (58.3)	1480 (58.3)
	Wheel Base		mm (in.)	2700 (106.3)	2700 (106.3)	2700 (106.3)	2700 (106.3)
	Tread	Front	mm (in.)	1506 (59.3)	1506 (59.3)	1506 (59.3)	1506 (59.3)
		Rear	mm (in.)	1510 (59.4)	1510 (59.4)	1510 (59.4)	1510 (59.4)
	Room	Length	mm (in.)	2090 (82.3)	2090 (82.3)	2090 (82.3)	2090 (82.3)
		Width	mm (in.)	1485 (58.5)	1485 (58.5)	1485 (58.5)	1485 (58.5)
		Height	mm (in.)	1210 (47.6), 1160 (45.7)*1	1210 (47.6), 1160 (45.7)*1	1210 (47.6), 1160 (45.7)*1	1210 (47.6), 1160 (45.7)*1
	Overhang	Front	mm (in.)	910 (35.8)	910 (35.8)	910 (35.8)	910 (35.8)
		Rear	mm (in.)	1025 (40.4)	1025 (40.4)	1025 (40.4)	1025 (40.4)
	Min. Running Ground Clearance		mm (in.)	135 (5.3), 155 (6.1)*2	135 (5.3), 155 (6.1)*2	135 (5.3), 155 (6.1)*2	135 (5.3), 155 (6.1)*2
	Angle of Approach		degrees	13.1°, 14.5°*2	13.1°, 14.5°*2	13.1°, 14.5°*2	13.1°, 14.5°*2
	Angle of Departure		degrees	18.7°, 20.1°*2	18.7°, 20.1°*2	18.7°, 20.1°*2	18.7°, 20.1°*2
	Curb Weight	Front	kg (lb)	845 - 900 (1863 - 1984)	845 - 900 (1863 - 1984)	845 - 900 (1863 - 1984)	845 - 900 (1863 - 1984)
		Rear	kg (lb)	535 - 565 (1179 - 1246)	535 - 565 (1179 - 1246)	535 - 565 (1179 - 1246)	535 - 565 (1179 - 1246)
		Total	kg (lb)	1380 - 1465 (3042 - 3230)	1380 - 1465 (3042 - 3230)	1380 - 1465 (3042 - 3230)	1380 - 1465 (3042 - 3230)
	Gross Vehicle Weight	Front	kg (lb)	985 (2172)	985 (2172)	985 (2172)	985 (2172)
		Rear	kg (lb)	985 (2172)	985 (2172)	985 (2172)	985 (2172)
		Total	kg (lb)	1970 (4344)	1970 (4344)	1970 (4344)	1970 (4344)
	Fuel Tank Capacity		ℓ (Imp.gal.)	60 (15.9, 13.2)	60 (15.9, 13.2)	60 (15.9, 13.2)	60 (15.9, 13.2)
	Luggage Compartment Capacity		m^3 (cu.ft.)	0.520 (18.4)	0.520 (18.4)	0.520 (18.4)	0.520 (18.4)
Performance	Max. Speed		km / h (mph)	195 (121)	195 (121)	195 (121)	195 (121)
	Max. Cruising Speed		km / h (mph)	—	—	—	—
	Acceleration	0 to 100 km / h	sec.	11.2	11.2	11.2	11.2
		0 to 400 m	sec.	17.7	17.7	17.7	17.7
	Max. Permissible Speed	1st Gear	km / h (mph)	45 (27)	45 (27)	45 (27)	45 (27)
		2nd Gear	km / h (mph)	84 (52)	84 (52)	84 (52)	84 (52)
		3rd Gear	km / h (mph)	128 (79)	128 (79)	128 (79)	128 (79)
		4th Gear	km / h (mph)	176 (109)	176 (109)	176 (109)	176 (109)
	Min. Turning Radius	Tire	m (ft.)	5.6 (18.4)	5.6 (18.4)	5.6 (18.4)	5.6 (18.4)
		Body	m (ft.)	5.995 (19.7)	5.995 (19.7)	5.995 (19.7)	5.995 (19.7)
Engine	Engine Type			1CD-FTV	1CD-FTV	1CD-FTV	1CD-FTV
	Valve Mechanism			16-Valve, DOHC	16-Valve, DOHC	16-Valve, DOHC	16-Valve, DOHC
	Bore x Stroke		mm (in.)	82.2 x 94.0 (3.24 x 3.70)	82.2 x 94.0 (3.24 x 3.70)	82.2 x 94.0 (3.24 x 3.70)	82.2 x 94.0 (3.24 x 3.70)
	Displacement		cm^3 (cu.in.)	1995 (121.7)	1995 (121.7)	1995 (121.7)	1995 (121.7)
	Compression Ratio			17.8	17.8	17.8	17.8
	Carburetor Type or Injection Pump Type (Diesel)			Common-Rail Type	Common-Rail Type	Common-Rail Type	Common-Rail Type
	Research Octane No. or Cetane No. (Diesel)			48 or higher	48 or higher	48 or higher	48 or higher
	Max. Output (EEC)		kW / rpm	85 / 3600	85 / 3600	85 / 3600	85 / 3600
	Max. Torque (EEC)		N·m / rpm	280 / 2000 - 2200	280 / 2000 - 2200	280 / 2000 - 2200	280 / 2000 - 2200
Engine Electric	Battery Capacity (5HR)		Voltage & Amp. hr.	12 - 60	12 - 60	12 - 60	12 - 60
	Alternator Output		Watts	1200	1200	1200	1200
	Starter Output		kW	2.0	2.0	2.0	2.0
Chassis	Clutch Type			Dry, Single Plate	Dry, Single Plate	Dry, Single Plate	Dry, Single Plate
	Transaxle Type			E357	E357	E357	E357
	Transmission Gear Ratio	In First		3.538	3.538	3.538	3.538
		In Second		1.913	1.913	1.913	1.913
		In Third		1.258	1.258	1.258	1.258
		In Fourth		0.918	0.918	0.918	0.918
		In Fifth		0.690	0.690	0.690	0.690
		In Reverse		3.583	3.583	3.583	3.583
	Counter Gear Ratio			—	—	—	—
	Differential Gear Ratio (Final)			3.684	3.684	3.684	3.684
	Brake Type	Front		Ventilated Disc	Ventilated Disc	Ventilated Disc	Ventilated Disc
		Rear		Solid Disc	Solid Disc	Solid Disc	Solid Disc
	Parking Brake Type			Drum	Drum	Drum	Drum
	Brake Booster Type and Size		in.	Tandem 8" + 9"	Tandem 8" + 9"	Tandem 8" + 9"	Tandem 8" + 9"
	Proportioning Valve Type			—	—	—	—
	Suspension Type	Front		MacPherson Strut.	MacPherson Strut.	MacPherson Strut.	MacPherson Strut.
		Rear		Double Wishbone	Double Wishbone	Double Wishbone	Double Wishbone
	Stabilizer Bar	Front		STD	STD	STD	STD
		Rear		STD	STD	STD	STD
	Steering Gear Type			Rack and Pinion	Rack and Pinion	Rack and Pinion	Rack and Pinion
	Steering Gear Ratio (Overall)			16.1	16.1	16.1	16.1
	Power Steering Type			Integral Type	Integral Type	Integral Type	Integral Type

*1: With Sun Roof
*2: Rough Road Pack
*3: Option

EUROPE					
5-Door Liftback					
ENTRY					
ZZT250R-ALMNKW	ZZT250L-ALMNKW	ZZT251R-ALMNKW	ZZT251L-ALMNKW	ZZT251R-ALPNKW	ZZT251L-ALPNKW
4630 (182.3)	4630 (182.3)	4630 (182.3)	4630 (182.3)	4630 (182.3)	4630 (182.3)
1760 (69.3)	1760 (69.3)	1760 (69.3)	1760 (69.3)	1760 (69.3)	1760 (69.3)
1480 (58.3)	1480 (58.3)	1480 (58.3)	1480 (58.3)	1480 (58.3)	1480 (58.3)
2700 (106.3)	2700 (106.3)	2700 (106.3)	2700 (106.3)	2700 (106.3)	2700 (106.3)
1506 (59.3)	1506 (59.3)	1506 (59.3)	1506 (59.3)	1506 (59.3)	1506 (59.3)
1510 (59.4)	1510 (59.4)	1510 (59.4)	1510 (59.4)	1510 (59.4)	1510 (59.4)
2090 (82.3)	2090 (82.3)	2090 (82.3)	2090 (82.3)	2090 (82.3)	2090 (82.3)
1485 (58.5)	1485 (58.5)	1485 (58.5)	1485 (58.5)	1485 (58.5)	1485 (58.5)
1210 (47.6), 1160 (45.7)*1	1210 (47.6), 1160 (45.7)*1	1210 (47.6), 1160 (45.7)*1	1210 (47.6), 1160 (45.7)*1	1210 (47.6), 1160 (45.7)*1	1210 (47.6), 1160 (45.7)*1
910 (35.8)	910 (35.8)	910 (35.8)	910 (35.8)	910 (35.8)	910 (35.8)
1025 (40.4)	1025 (40.4)	1025 (40.4)	1025 (40.4)	1025 (40.4)	1025 (40.4)
135 (5.3), 155 (6.1)*2	135 (5.3), 155 (6.1)*2	135 (5.3), 155 (6.1)*2	135 (5.3), 155 (6.1)*2	135 (5.3), 155 (6.1)*2	135 (5.3), 155 (6.1)*2
13.1°, 14.5°*2	13.1°, 14.5°*2	13.1°, 14.5°*2	13.1°, 14.5°*2	13.1°, 14.5°*2	13.1°, 14.5°*2
18.7°, 20.1°*2	18.7°, 20.1°*2	18.7°, 20.1°*2	18.7°, 20.1°*2	18.7°, 20.1°*2	18.7°, 20.1°*2
710 - 750 (1565 - 1653)	710 - 750 (1565 - 1653)	710 - 750 (1565 - 1653)	710 - 750 (1565 - 1653)	730 - 770 (1609 - 1698)	730 - 770 (1609 - 1698)
555 - 570 (1224 - 1257)	555 - 570 (1224 - 1257)	555 - 580 (1224 - 1279)	555 - 580 (1224 - 1279)	555 - 580 (1224 - 1279)	555 - 580 (1224 - 1279)
1265 - 1320 (2789 - 2910)	1265 - 1320 (2789 - 2910)	1265 - 1330 (2789 - 2932)	1265 - 1330 (2789 - 2932)	1285 - 1350 (2833 - 2977)	1285 - 1350 (2833 - 2977)
840 (1852)	840 (1852)	840 (1852)	840 (1852)	840 (1852)	840 (1852)
980 (2161)	980 (2161)	980 (2161)	980 (2161)	980 (2161)	980 (2161)
1820 (4013)	1820 (4013)	1820 (4013)	1820 (4013)	1820 (4013)	1820 (4013)
60 (15.9, 13.2)	60 (15.9, 13.2)	60 (15.9, 13.2)	60 (15.9, 13.2)	60 (15.9, 13.2)	60 (15.9, 13.2)
0.510 (18.0)	0.510 (18.0)	0.510 (18.0)	0.510 (18.0)	0.510 (18.0)	0.510 (18.0)
190 (118)	190 (118)	200 (124)	200 (124)	185 (115)	185 (115)
—	—	—	—	—	—
12.0	12.0	10.3	10.3	11.6	11.6
18.1	18.1	17.1	17.1	17.9	17.9
47 (29)	47 (29)	51 (31)	51 (31)	59 (36)	59 (36)
87 (54)	87 (54)	95 (59)	95 (59)	109 (67)	109 (67)
127 (78)	127 (78)	139 (86)	139 (86)	169 (105)	169 (105)
172 (106)	172 (106)	176 (109)	176 (109)	—	—
5.4 (17.7)	5.4 (17.7)	5.4 (17.7)	5.4 (17.7)	5.4 (17.7)	5.4 (17.7)
5.75 (18.9)	5.75 (18.9)	5.75 (18.9)	5.75 (18.9)	5.75 (18.9)	5.75 (18.9)
3ZZ-FE	3ZZ-FE	1ZZ-FE	1ZZ-FE	1ZZ-FE	1ZZ-FE
16-Valve, DOHC	16-Valve, DOHC	16-Valve, DOHC	16-Valve, DOHC	16-Valve, DOHC	16-Valve, DOHC
79.0 x 81.5 (3.11 x 3.21)	79.0 x 81.5 (3.11 x 3.21)	79.0 x 91.5 (3.11 x 3.60)	79.0 x 91.5 (3.11 x 3.60)	79.0 x 91.5 (3.11 x 3.60)	79.0 x 91.5 (3.11 x 3.60)
1598 (97.5)	1598 (97.5)	1794 (109.5)	1794 (109.5)	1794 (109.5)	1794 (109.5)
10.5	10.5	10.0	10.0	10.0	10.0
EFI	EFI	EFI	EFI	EFI	EFI
95 or higher	95 or higher	95 or higher	95 or higher	95 or higher	95 or higher
81 / 6000	81 / 6000	95 / 6000	95 / 6000	95 / 6000	95 / 6000
150 / 3800	150 / 3800	170 / 4200	170 / 4200	170 / 4200	170 / 4200
12 - 32, 48*3	12 - 32, 48*3	12 - 32, 48*3	12 - 32, 48*3	12 - 32, 48*3	12 - 32, 48*3
960, 1080*3	960, 1080*3	960, 1080*3	960, 1080*3	960, 1080*3	960, 1080*3
1.3	1.3	1.3	1.3	1.3	1.3
Dry, Single Plate	Dry, Single Plate	Dry, Single Plate	Dry, Single Plate	—	—
C50	C50	C250	C250	U341E	U341E
3.545	3.545	3.545	3.545	2.847	2.847
1.904	1.904	1.904	1.904	1.552	1.552
1.310	1.310	1.310	1.310	1.000	1.000
0.969	0.969	1.031	1.031	0.700	0.700
0.815	0.815	0.815	0.815	—	—
3.250	3.250	3.250	3.250	2.343	2.343
—	—	—	—	—	—
4.312	4.312	3.941	3.941	4.237	4.237
Ventilated Disc	Ventilated Disc	Ventilated Disc	Ventilated Disc	Ventilated Disc	Ventilated Disc
Solid Disc	Solid Disc	Solid Disc	Solid Disc	Solid Disc	Solid Disc
Drum	Drum	Drum	Drum	Drum	Drum
Tandem 8” + 9”	Tandem 8” + 9”	Tandem 8” + 9”	Tandem 8” + 9”	Tandem 8” + 9”	Tandem 8” + 9”
—	—	—	—	—	—
MacPherson Strut.	MacPherson Strut.	MacPherson Strut.	MacPherson Strut.	MacPherson Strut.	MacPherson Strut.
Double Wishbone	Double Wishbone	Double Wishbone	Double Wishbone	Double Wishbone	Double Wishbone
STD	STD	STD	STD	STD	STD
STD	STD	STD	STD	STD	STD
Rack and Pinion	Rack and Pinion	Rack and Pinion	Rack and Pinion	Rack and Pinion	Rack and Pinion
17.5	17.5	17.5	17.5	17.5	17.5
EPS	EPS	EPS	EPS	EPS	EPS

Item \ Area				EUROPE			
Body Type				5-Door Liftback			
Vehicle Grade				MID TECHNICAL			
Model Code				ZZT251R-ALMEKW	ZZT251L-ALMEKW	ZZT251R-ALPEKW	ZZT251L-ALPEKW
Major Dimension & Vehicle Weights	Overall	Length	mm (in.)	4630 (182.3)	4630 (182.3)	4630 (182.3)	4630 (182.3)
		Width	mm (in.)	1760 (69.3)	1760 (69.3)	1760 (69.3)	1760 (69.3)
		Height	mm (in.)	1480 (58.3)	1480 (58.3)	1480 (58.3)	1480 (58.3)
	Wheel Base		mm (in.)	2700 (106.3)	2700 (106.3)	2700 (106.3)	2700 (106.3)
	Tread	Front	mm (in.)	1506 (59.3)	1506 (59.3)	1506 (59.3)	1506 (59.3)
		Rear	mm (in.)	1510 (59.4)	1510 (59.4)	1510 (59.4)	1510 (59.4)
	Room	Length	mm (in.)	2090 (82.3)	2090 (82.3)	2090 (82.3)	2090 (82.3)
		Width	mm (in.)	1485 (58.5)	1485 (58.5)	1485 (58.5)	1485 (58.5)
		Height	mm (in.)	1210 (47.6), 1160 (45.7)*1	1210 (47.6), 1160 (45.7)*1	1210 (47.6), 1160 (45.7)*1	1210 (47.6), 1160 (45.7)*1
	Overhang	Front	mm (in.)	910 (35.8)	910 (35.8)	910 (35.8)	910 (35.8)
		Rear	mm (in.)	1025 (40.4)	1025 (40.4)	1025 (40.4)	1025 (40.4)
	Min. Running Ground Clearance		mm (in.)	135 (5.3), 155 (6.1)*2	135 (5.3), 155 (6.1)*2	135 (5.3), 155 (6.1)*2	135 (5.3), 155 (6.1)*2
	Angle of Approach		degrees	13.1°, 14.5°*2	13.1°, 14.5°*2	13.1°, 14.5°*2	13.1°, 14.5°*2
	Angle of Departure		degrees	18.7°, 20.1°*2	18.7°, 20.1°*2	18.7°, 20.1°*2	18.7°, 20.1°*2
	Curb Weight	Front	kg (lb)	720 - 750 (1587 - 1653)	720 - 750 (1587 - 1653)	730 - 770 (1609 - 1698)	730 - 770 (1609 - 1698)
		Rear	kg (lb)	555 - 580 (1224 - 1279)	555 - 580 (1224 - 1279)	555 - 580 (1224 - 1279)	555 - 580 (1224 - 1279)
		Total	kg (lb)	1275 - 1330 (2811 - 2932)	1275 - 1330 (2811 - 2932)	1285 - 1350 (2833 - 2977)	1285 - 1350 (2833 - 2977)
	Gross Vehicle Weight	Front	kg (lb)	840 (1852)	840 (1852)	840 (1852)	840 (1852)
		Rear	kg (lb)	980 (2161)	980 (2161)	980 (2161)	980 (2161)
		Total	kg (lb)	1820 (4013)	1820 (4013)	1820 (4013)	1820 (4013)
	Fuel Tank Capacity		ℓ (Imp.gal.)	60 (15.9, 13.2)	60 (15.9, 13.2)	60 (15.9, 13.2)	60 (15.9, 13.2)
	Luggage Compartment Capacity		m^3 (cu.ft.)	0.510 (18.0)	0.510 (18.0)	0.510 (18.0)	0.510 (18.0)
Performance	Max. Speed		km / h (mph)	200 (124)	200 (124)	185 (115)	185 (115)
	Max. Cruising Speed		km / h (mph)	—	—	—	—
	Acceleration	0 to 100 km / h	sec.	10.3	10.3	11.6	11.6
		0 to 400 m	sec.	17.1	17.1	17.9	17.9
	Max. Permissible Speed	1st Gear	km / h (mph)	51 (31)	51 (31)	59 (36)	59 (36)
		2nd Gear	km / h (mph)	95 (59)	95 (59)	109 (67)	109 (67)
		3rd Gear	km / h (mph)	139 (86)	139 (86)	169 (105)	169 (105)
		4th Gear	km / h (mph)	176 (109)	176 (109)	—	—
	Min. Turning Radius	Tire	m (ft.)	5.4 (17.7)	5.4 (17.7)	5.4 (17.7)	5.4 (17.7)
		Body	m (ft.)	5.75 (18.9)	5.75 (18.9)	5.75 (18.9)	5.75 (18.9)
Engine	Engine Type			1ZZ-FE	1ZZ-FE	1ZZ-FE	1ZZ-FE
	Valve Mechanism			16-Valve, DOHC	16-Valve, DOHC	16-Valve, DOHC	16-Valve, DOHC
	Bore x Stroke		mm (in.)	79.0 x 91.5 (3.11 x 3.60)	79.0 x 91.5 (3.11 x 3.60)	79.0 x 91.5 (3.11 x 3.60)	79.0 x 91.5 (3.11 x 3.60)
	Displacement		cm^3 (cu.in.)	1794 (109.5)	1794 (109.5)	1794 (109.5)	1794 (109.5)
	Compression Ratio			10.0	10.0	10.0	10.0
	Carburetor Type or Injection Pump Type (Diesel)			EFI	EFI	EFI	EFI
	Research Octane No. or Cetane No. (Diesel)			95 or higher	95 or higher	95 or higher	95 or higher
	Max. Output (EEC)		kW / rpm	95 / 6000	95 / 6000	95 / 6000	95 / 6000
	Max. Torque (EEC)		N·m / rpm	170 / 4200	170 / 4200	170 / 4200	170 / 4200
Engine Electric	Battery Capacity (5HR)		Voltage & Amp. hr.	12 - 32, 48*3	12 - 32, 48*3	12 - 32, 48*3	12 - 32, 48*3
	Alternator Output		Watts	960, 1080*3	960, 1080*3	960, 1080*3	960, 1080*3
	Starter Output		kW	1.3	1.3	1.3	1.3
Chassis	Clutch Type			Dry, Single Plate	Dry, Single Plate	—	—
	Transaxle Type			C250	C250	U341E	U341E
	Transmission Gear Ratio	In First		3.545	3.545	2.847	2.847
		In Second		1.904	1.904	1.552	1.552
		In Third		1.310	1.310	1.000	1.000
		In Fourth		1.031	1.031	0.700	0.700
		In Fifth		0.815	0.815	—	—
		In Reverse		3.250	3.250	2.343	2.343
	Counter Gear Ratio			—	—	—	—
	Differential Gear Ratio (Final)			3.941	3.941	4.237	4.237
	Brake Type	Front		Ventilated Disc	Ventilated Disc	Ventilated Disc	Ventilated Disc
		Rear		Solid Disc	Solid Disc	Solid Disc	Solid Disc
	Parking Brake Type			Drum	Drum	Drum	Drum
	Brake Booster Type and Size		in.	Tandem 8" + 9"	Tandem 8" + 9"	Tandem 8" + 9"	Tandem 8" + 9"
	Proportioning Valve Type			—	—	—	—
	Suspension Type	Front		MacPherson Strut.	MacPherson Strut.	MacPherson Strut.	MacPherson Strut.
		Rear		Double Wishbone	Double Wishbone	Double Wishbone	Double Wishbone
	Stabilizer Bar	Front		STD	STD	STD	STD
		Rear		STD	STD	STD	STD
	Steering Gear Type			Rack and Pinion	Rack and Pinion	Rack and Pinion	Rack and Pinion
	Steering Gear Ratio (Overall)			17.5	17.5	17.5	17.5
	Power Steering Type			EPS	EPS	EPS	EPS

*1: With Sun Roof
*2: Rough Road Pack
*3: Option

	EUROPE					
	5-Door Liftback					
	MID ELEGANT				MID TECHNICAL	
	ZZT251R-ALMGKW	ZZT251L-ALMGKW	ZZT251R-ALPGKW	ZZT251L-ALPGKW	AZT250R-ALMEHW	AZT250L-ALMEHW
5	4630 (182.3)	4630 (182.3)	4630 (182.3)	4630 (182.3)	4630 (182.3)	4630 (182.3)
	1760 (69.3)	1760 (69.3)	1760 (69.3)	1760 (69.3)	1760 (69.3)	1760 (69.3)
	1480 (58.3)	1480 (58.3)	1480 (58.3)	1480 (58.3)	1480 (58.3)	1480 (58.3)
	2700 (106.3)	2700 (106.3)	2700 (106.3)	2700 (106.3)	2700 (106.3)	2700 (106.3)
	1506 (59.3)	1506 (59.3)	1506 (59.3)	1506 (59.3)	1506 (59.3)	1506 (59.3)
10	1510 (59.4)	1510 (59.4)	1510 (59.4)	1510 (59.4)	1510 (59.4)	1510 (59.4)
	2090 (82.3)	2090 (82.3)	2090 (82.3)	2090 (82.3)	2090 (82.3)	2090 (82.3)
	1485 (58.5)	1485 (58.5)	1485 (58.5)	1485 (58.5)	1485 (58.5)	1485 (58.5)
	1210 (47.6), 1160 (45.7)*1	1210 (47.6), 1160 (45.7)*1	1210 (47.6), 1160 (45.7)*1	1210 (47.6), 1160 (45.7)*1	1210 (47.6), 1160 (45.7)*1	1210 (47.6), 1160 (45.7)*1
	910 (35.8)	910 (35.8)	910 (35.8)	910 (35.8)	910 (35.8)	910 (35.8)
15	1025 (40.4)	1025 (40.4)	1025 (40.4)	1025 (40.4)	1025 (40.4)	1025 (40.4)
	135 (5.3), 155 (6.1)*2	135 (5.3), 155 (6.1)*2	135 (5.3), 155 (6.1)*2	135 (5.3), 155 (6.1)*2	135 (5.3), 155 (6.1)*2	135 (5.3), 155 (6.1)*2
	13.1°, 14.5°*2	13.1°, 14.5°*2	13.1°, 14.5°*2	13.1°, 14.5°*2	13.1°, 14.5°*2	13.1°, 14.5°*2
	18.7°, 20.1°*2	18.7°, 20.1°*2	18.7°, 20.1°*2	18.7°, 20.1°*2	18.7°, 20.1°*2	18.7°, 20.1°*2
	720 - 750 (1587 - 1653)	720 - 750 (1587 - 1653)	730 - 770 (1609 - 1698)	730 - 770 (1609 - 1698)	770 - 800 (1698 - 1764)	770 - 800 (1698 - 1764)
20	555 - 580 (1224 - 1279)	555 - 580 (1224 - 1279)	555 - 580 (1224 - 1279)	555 - 580 (1224 - 1279)	565 - 580 (1246 - 1279)	565 - 580 (1246 - 1279)
	1275 - 1330 (2811 - 2932)	1275 - 1330 (2811 - 2932)	1285 - 1350 (2833 - 2976)	1285 - 1350 (2833 - 2976)	1335 - 1380 (2944 - 3043)	1335 - 1380 (2944 - 3043)
	840 (1852)	840 (1852)	840 (1852)	840 (1852)	915 (2017)	915 (2017)
	980 (2161)	980 (2161)	980 (2161)	980 (2161)	980 (2161)	980 (2161)
	1820 (4013)	1820 (4013)	1820 (4013)	1820 (4013)	1895 (4178)	1895 (4178)
25	60 (15.9, 13.2)	60 (15.9, 13.2)	60 (15.9, 13.2)	60 (15.9, 13.2)	60 (15.9, 13.2)	60 (15.9, 13.2)
	0.510 (18.0)	0.510 (18.0)	0.510 (18.0)	0.510 (18.0)	0.510 (18.0)	0.510 (18.0)
	200 (124)	200 (124)	185 (115)	185 (115)	205 (127)	205 (127)
	—	—	—	—	—	—
	10.3	10.3	11.6	11.6	9.4	9.4
30	17.1	17.1	17.9	17.9	16.6	16.6
	51 (31)	51 (31)	59 (36)	59 (36)	56 (34)	56 (34)
	95 (59)	95 (59)	109 (67)	109 (67)	96 (59)	96 (59)
	139 (86)	139 (86)	169 (105)	169 (105)	149 (92)	149 (92)
	176 (109)	176 (109)	—	—	193 (119)	193 (119)
35	5.4 (17.7)	5.4 (17.7)	5.4 (17.7)	5.4 (17.7)	5.6 (18.4)	5.6 (18.4)
	5.75 (18.9)	5.75 (18.9)	5.75 (18.9)	5.75 (18.9)	5.995 (19.7)	5.995 (19.7)
	1ZZ-FE	1ZZ-FE	1ZZ-FE	1ZZ-FE	1AZ-FSE	1AZ-FSE
	16-Valve, DOHC	16-Valve, DOHC	16-Valve, DOHC	16-Valve, DOHC	16-Valve, DOHC	16-Valve, DOHC
	79.0 x 91.5 (3.11 x 3.60)	79.0 x 91.5 (3.11 x 3.60)	79.0 x 91.5 (3.11 x 3.60)	79.0 x 91.5 (3.11 x 3.60)	86.0 x 86.0 (3.39 x 3.39)	86.0 x 86.0 (3.39 x 3.39)
40	1794 (109.5)	1794 (109.5)	1794 (109.5)	1794 (109.5)	1998 (121.9)	1998 (121.9)
	10.0	10.0	10.0	10.0	11.0	11.0
	EFI	EFI	EFI	EFI	EFI	EFI
	95 or higher	95 or higher	95 or higher	95 or higher	95 or higher	95 or higher
	95 / 6000	95 / 6000	95 / 6000	95 / 6000	108 / 5700	108 / 5700
45	170 / 4200	170 / 4200	170 / 4200	170 / 4200	196 / 4000	196 / 4000
	12 - 32, 48*3	12 - 32, 48*3	12 - 32, 48*3	12 - 32, 48*3	12 - 32, 48*3	12 - 32, 48*3
	960, 1080*3	960, 1080*3	960, 1080*3	960, 1080*3	1200	1200
	1.3	1.3	1.3	1.3	1.3, 1.6*3	1.3, 1.6*3
	Dry, Single Plate	Dry, Single Plate	—	—	Dry, Single Plate	Dry, Single Plate
50	C250	C250	U341E	U341E	E354	E354
	3.545	3.545	2.847	2.847	3.538	3.538
	1.904	1.904	1.552	1.552	2.054	2.054
	1.310	1.310	1.000	1.000	1.333	1.333
	1.031	1.031	0.700	0.700	1.028	1.028
55	0.815	0.815	—	—	0.820	0.820
	3.250	3.250	2.343	2.343	3.583	3.583
	—	—	—	—	—	—
	3.941	3.941	4.237	4.237	3.684	3.684
	Ventilated Disc	Ventilated Disc	Ventilated Disc	Ventilated Disc	Ventilated Disc	Ventilated Disc
60	Solid Disc	Solid Disc	Solid Disc	Solid Disc	Solid Disc	Solid Disc
	Drum	Drum	Drum	Drum	Drum	Drum
	Tandem 8” + 9”	Tandem 8” + 9”	Tandem 8” + 9”	Tandem 8” + 9”	Tandem 8” + 9”	Tandem 8” + 9”
	—	—	—	—	—	—
	MacPherson Strut.	MacPherson Strut.	MacPherson Strut.	MacPherson Strut.	MacPherson Strut.	MacPherson Strut.
65	Double Wishbone	Double Wishbone	Double Wishbone	Double Wishbone	Double Wishbone	Double Wishbone
	STD	STD	STD	STD	STD	STD
	STD	STD	STD	STD	STD	STD
	Rack and Pinion	Rack and Pinion	Rack and Pinion	Rack and Pinion	Rack and Pinion	Rack and Pinion
	17.5	17.5	17.5	17.5	16.1	16.1
70	EPS	EPS	EPS	EPS	Integral Type	Integral Type

Item \ Area				EUROPE			
Body Type				5-Door Liftback			
Vehicle Grade				MID TECHNICAL		MID ELEGANT	
Model Code				AZT250R-ALPEHW	AZT250L-ALPEHW	AZT250R-ALMGHW	AZT250L-ALMGHW
Major Dimension & Vehicle Weights	Overall	Length	mm (in.)	4630 (182.3)	4630 (182.3)	4630 (182.3)	4630 (182.3)
		Width	mm (in.)	1760 (69.3)	1760 (69.3)	1760 (69.3)	1760 (69.3)
		Height	mm (in.)	1480 (58.3)	1480 (58.3)	1480 (58.3)	1480 (58.3)
	Wheel Base		mm (in.)	2700 (106.3)	2700 (106.3)	2700 (106.3)	2700 (106.3)
	Tread	Front	mm (in.)	1506 (59.3)	1506 (59.3)	1506 (59.3)	1506 (59.3)
		Rear	mm (in.)	1510 (59.4)	1510 (59.4)	1510 (59.4)	1510 (59.4)
	Room	Length	mm (in.)	2090 (82.3)	2090 (82.3)	2090 (82.3)	2090 (82.3)
		Width	mm (in.)	1485 (58.5)	1485 (58.5)	1485 (58.5)	1485 (58.5)
		Height	mm (in.)	1210 (47.6), 1160 (45.7)*1	1210 (47.6), 1160 (45.7)*1	1210 (47.6), 1160 (45.7)*1	1210 (47.6), 1160 (45.7)*1
	Overhang	Front	mm (in.)	910 (35.8)	910 (35.8)	910 (35.8)	910 (35.8)
		Rear	mm (in.)	1025 (40.4)	1025 (40.4)	1025 (40.4)	1025 (40.4)
	Min. Running Ground Clearance		mm (in.)	135 (5.3), 155 (6.1)*2	135 (5.3), 155 (6.1)*2	135 (5.3), 155 (6.1)*2	135 (5.3), 155 (6.1)*2
	Angle of Approach		degrees	13.1°, 14.5°*2	13.1°, 14.5°*2	13.1°, 14.5°*2	13.1°, 14.5°*2
	Angle of Departure		degrees	18.7°, 20.1°*2	18.7°, 20.1°*2	18.7°, 20.1°*2	18.7°, 20.1°*2
	Curb Weight	Front	kg (lb)	800 - 835 (1764 - 1841)	800 - 835 (1764 - 1841)	770 - 800 (1698 - 1764)	770 - 800 (1698 - 1764)
		Rear	kg (lb)	565 - 585 (1246 - 1290)	565 - 585 (1246 - 1290)	565 - 580 (1246 - 1279)	565 - 580 (1246 - 1279)
		Total	kg (lb)	1365 - 1420 (3010 - 3131)	1365 - 1420 (3010 - 3131)	1335 - 1380 (2944 - 3043)	1335 - 1380 (2944 - 3043)
	Gross Vehicle Weight	Front	kg (lb)	915 (2017)	915 (2017)	915 (2017)	915 (2017)
		Rear	kg (lb)	980 (2161)	980 (2161)	980 (2161)	980 (2161)
		Total	kg (lb)	1895 (4178)	1895 (4178)	1895 (4178)	1895 (4178)
	Fuel Tank Capacity		ℓ (Imp.gal.)	60 (15.9, 13.2)	60 (15.9, 13.2)	60 (15.9, 13.2)	60 (15.9, 13.2)
	Luggage Compartment Capacity		m^3 (cu.ft.)	0.510 (18.0)	0.510 (18.0)	0.510 (18.0)	0.510 (18.0)
Performance	Max. Speed		km / h (mph)	195 (121)	195 (121)	205 (127)	205 (127)
	Max. Cruising Speed		km / h (mph)	—	—	—	—
	Acceleration	0 to 100 km / h	sec.	11.1	11.1	9.4	9.4
		0 to 400 m	sec.	17.6	17.6	16.6	16.6
	Max. Permissible Speed	1st Gear	km / h (mph)	63 (39)	63 (39)	56 (34)	56 (34)
		2nd Gear	km / h (mph)	114 (71)	114 (71)	96 (59)	96 (59)
		3rd Gear	km / h (mph)	177 (110)	177 (110)	149 (92)	149 (92)
		4th Gear	km / h (mph)	—	—	193 (119)	193 (119)
	Min. Turning Radius	Tire	m (ft.)	5.6 (18.4)	5.6 (18.4)	5.6 (18.4)	5.6 (18.4)
		Body	m (ft.)	5.995 (19.7)	5.995 (19.7)	5.995 (19.7)	5.995 (19.7)
Engine	Engine Type			1AZ-FSE	1AZ-FSE	1AZ-FSE	1AZ-FSE
	Valve Mechanism			16-Valve, DOHC	16-Valve, DOHC	16-Valve, DOHC	16-Valve, DOHC
	Bore x Stroke		mm (in.)	86.0 x 86.0 (3.39 x 3.39)	86.0 x 86.0 (3.39 x 3.39)	86.0 x 86.0 (3.39 x 3.39)	86.0 x 86.0 (3.39 x 3.39)
	Displacement		cm^3 (cu.in.)	1998 (121.9)	1998 (121.9)	1998 (121.9)	1998 (121.9)
	Compression Ratio			11.0	11.0	11.0	11.0
	Carburetor Type or Injection Pump Type (Diesel)			EFI	EFI	EFI	EFI
	Research Octane No. or Cetane No. (Diesel)			95 or higher	95 or higher	95 or higher	95 or higher
	Max. Output (EEC)		kW / rpm	108 / 5700	108 / 5700	108 / 5700	108 / 5700
	Max. Torque (EEC)		N·m / rpm	196 / 4000	196 / 4000	196 / 4000	196 / 4000
Engine Electric	Battery Capacity (5HR)		Voltage & Amp. hr.	12 - 48	12 - 48	12 - 32, 48*3	12 - 32, 48*3
	Alternator Output		Watts	1200	1200	1200	1200
	Starter Output		kW	1.6	1.6	1.3, 1.6*3	1.3, 1.6*3
Chassis	Clutch Type			—	—	Dry, Single Plate	Dry, Single Plate
	Transaxle Type			U241E*4	U241E*4	E354	E354
	Transmission Gear Ratio	In First		3.943	3.943	3.538	3.538
		In Second		2.197	2.197	2.054	2.054
		In Third		1.413	1.413	1.333	1.333
		In Fourth		1.020	1.020	1.028	1.028
		In Fifth		—	—	0.820	0.820
		In Reverse		3.145	3.145	3.583	3.583
	Counter Gear Ratio			—	—	—	—
	Differential Gear Ratio (Final)			2.923	2.923	3.684	3.684
	Brake Type	Front		Ventilated Disc	Ventilated Disc	Ventilated Disc	Ventilated Disc
		Rear		Solid Disc	Solid Disc	Solid Disc	Solid Disc
	Parking Brake Type			Drum	Drum	Drum	Drum
	Brake Booster Type and Size		in.	Tandem 8" + 9"	Tandem 8" + 9"	Tandem 8" + 9"	Tandem 8" + 9"
	Proportioning Valve Type			—	—	—	—
	Suspension Type	Front		MacPherson Strut.	MacPherson Strut.	MacPherson Strut.	MacPherson Strut.
		Rear		Double Wishbone	Double Wishbone	Double Wishbone	Double Wishbone
	Stabilizer Bar	Front		STD	STD	STD	STD
		Rear		STD	STD	STD	STD
	Steering Gear Type			Rack and Pinion	Rack and Pinion	Rack and Pinion	Rack and Pinion
	Steering Gear Ratio (Overall)			16.1	16.1	16.1	16.1
	Power Steering Type			Integral Type	Integral Type	Integral Type	Integral Type

*1: With Sun Roof
*2: Rough Road Pack
*3: Option
*4: Snow Mord Type

EUROPE					
5-Door Liftback					
MID ELEGANT		ENTRY		MID TECHNICAL	
AZT250R-ALPGHW	AZT250L-ALPGHW	CDT250R-ALMNYW	CDT250L-ALMNYW	CDT250R-ALMEYW	CDT250L-ALMEYW
4630 (182.3)	4630 (182.3)	4630 (182.3)	4630 (182.3)	4630 (182.3)	4630 (182.3)
1760 (69.3)	1760 (69.3)	1760 (69.3)	1760 (69.3)	1760 (69.3)	1760 (69.3)
1480 (58.3)	1480 (58.3)	1480 (58.3)	1480 (58.3)	1480 (58.3)	1480 (58.3)
2700 (106.3)	2700 (106.3)	2700 (106.3)	2700 (106.3)	2700 (106.3)	2700 (106.3)
1506 (59.3)	1506 (59.3)	1506 (59.3)	1506 (59.3)	1506 (59.3)	1506 (59.3)
1510 (59.4)	1510 (59.4)	1510 (59.4)	1510 (59.4)	1510 (59.4)	1510 (59.4)
2090 (82.3)	2090 (82.3)	2090 (82.3)	2090 (82.3)	2090 (82.3)	2090 (82.3)
1485 (58.5)	1485 (58.5)	1485 (58.5)	1485 (58.5)	1485 (58.5)	1485 (58.5)
1210 (47.6), 1160 (45.7)*1	1210 (47.6), 1160 (45.7)*1	1210 (47.6), 1160 (45.7)*1	1210 (47.6), 1160 (45.7)*1	1210 (47.6), 1160 (45.7)*1	1210 (47.6), 1160 (45.7)*1
910 (35.8)	910 (35.8)	910 (35.8)	910 (35.8)	910 (35.8)	910 (35.8)
1025 (40.4)	1025 (40.4)	1025 (40.4)	1025 (40.4)	1025 (40.4)	1025 (40.4)
135 (5.3), 155 (6.1)*2	135 (5.3), 155 (6.1)*2	135 (5.3), 155 (6.1)*2	135 (5.3), 155 (6.1)*2	135 (5.3), 155 (6.1)*2	135 (5.3), 155 (6.1)*2
13.1°, 14.5°*2	13.1°, 14.5°*2	13.1°, 14.5°*2	13.1°, 14.5°*2	13.1°, 14.5°*2	13.1°, 14.5°*2
18.7°, 20.1°*2	18.7°, 20.1°*2	18.7°, 20.1°*2	18.7°, 20.1°*2	18.7°, 20.1°*2	18.7°, 20.1°*2
800 - 835 (1764 - 1841)	800 - 835 (1764 - 1841)	845 - 895 (1863 - 1973)	845 - 895 (1863 - 1973)	845 - 895 (1863 - 1973)	845 - 895 (1863 - 1973)
565 - 585 (1246 - 1290)	565 - 585 (1246 - 1290)	555 - 565 (1224 - 1246)	555 - 565 (1224 - 1246)	555 - 570 (1224 - 1257)	555 - 570 (1224 - 1257)
1365 - 1420 (3010 - 3131)	1365 - 1420 (3010 - 3131)	1400 - 1460 (3087 - 3219)	1400 - 1460 (3087 - 3219)	1400 - 1465 (3087 - 3230)	1400 - 1465 (3087 - 3230)
915 (2017)	915 (2017)	985 (2172)	985 (2172)	985 (2172)	985 (2172)
980 (2161)	980 (2161)	985 (2172)	985 (2172)	985 (2172)	985 (2172)
1895 (4178)	1895 (4178)	1970 (4344)	1970 (4344)	1970 (4344)	1970 (4344)
60 (15.9, 13.2)	60 (15.9, 13.2)	60 (15.9, 13.2)	60 (15.9, 13.2)	60 (15.9, 13.2)	60 (15.9, 13.2)
0.510 (18.0)	0.510 (18.0)	0.510 (18.0)	0.510 (18.0)	0.510 (18.0)	0.510 (18.0)
195 (121)	195 (121)	195 (121)	195 (121)	195 (121)	195 (121)
—	—	—	—	—	—
11.1	11.1	11.2	11.2	11.2	11.2
17.6	17.6	17.7	17.7	17.7	17.7
63 (39)	63 (39)	45 (27)	45 (27)	45 (27)	45 (27)
114 (71)	114 (71)	84 (52)	84 (52)	84 (52)	84 (52)
177 (110)	177 (110)	128 (79)	128 (79)	128 (79)	128 (79)
—	—	176 (109)	176 (109)	176 (109)	176 (109)
5.6 (18.4)	5.6 (18.4)	5.6 (18.4)	5.6 (18.4)	5.6 (18.4)	5.6 (18.4)
5.995 (19.7)	5.995 (19.7)	5.995 (19.7)	5.995 (19.7)	5.995 (19.7)	5.995 (19.7)
1AZ-FSE	1AZ-FSE	1CD-FTV	1CD-FTV	1CD-FTV	1CD-FTV
16-Valve, DOHC	16-Valve, DOHC	16-Valve, DOHC	16-Valve, DOHC	16-Valve, DOHC	16-Valve, DOHC
86.0 x 86.0 (3.39 x 3.39)	86.0 x 86.0 (3.39 x 3.39)	82.2 x 94.0 (3.24 x 3.70)	82.2 x 94.0 (3.24 x 3.70)	82.2 x 94.0 (3.24 x 3.70)	82.2 x 94.0 (3.24 x 3.70)
1998 (121.9)	1998 (121.9)	1995 (121.7)	1995 (121.7)	1995 (121.7)	1995 (121.7)
11.0	11.0	17.8	17.8	17.8	17.8
EFI	EFI	Common-Rail Type	Common-Rail Type	Common-Rail Type	Common-Rail Type
95 or higher	95 or higher	48 or higher	48 or higher	48 or higher	48 or higher
108 / 5700	108 / 5700	85 / 3600	85 / 3600	85 / 3600	85 / 3600
196 / 4000	196 / 4000	280 / 2000 - 2200	280 / 2000 - 2200	280 / 2000 - 2200	280 / 2000 - 2200
12 - 48	12 - 48	12 - 60	12 - 60	12 - 60	12 - 60
1200	1200	1200	1200	1200	1200
1.6	1.6	2.0	2.0	2.0	2.0
—	—	Dry, Single Plate	Dry, Single Plate	Dry, Single Plate	Dry, Single Plate
U241E*4	U241E*4	E357	E357	E357	E357
3.943	3.943	3.538	3.538	3.538	3.538
2.197	2.197	1.913	1.913	1.913	1.913
1.413	1.413	1.258	1.258	1.258	1.258
1.020	1.020	0.918	0.918	0.918	0.918
—	—	0.690	0.690	0.690	0.690
3.145	3.145	3.583	3.583	3.583	3.583
—	—	—	—	—	—
2.923	2.923	3.684	3.684	3.684	3.684
Ventilated Disc	Ventilated Disc	Ventilated Disc	Ventilated Disc	Ventilated Disc	Ventilated Disc
Solid Disc	Solid Disc	Solid Disc	Solid Disc	Solid Disc	Solid Disc
Drum	Drum	Drum	Drum	Drum	Drum
Tandem 8” + 9”	Tandem 8” + 9”	Tandem 8” + 9”	Tandem 8” + 9”	Tandem 8” + 9”	Tandem 8” + 9”
—	—	—	—	—	—
MacPherson Strut.	MacPherson Strut.	MacPherson Strut.	MacPherson Strut.	MacPherson Strut.	MacPherson Strut.
Double Wishbone	Double Wishbone	Double Wishbone	Double Wishbone	Double Wishbone	Double Wishbone
STD	STD	STD	STD	STD	STD
STD	STD	STD	STD	STD	STD
Rack and Pinion	Rack and Pinion	Rack and Pinion	Rack and Pinion	Rack and Pinion	Rack and Pinion
16.1	16.1	16.1	16.1	16.1	16.1
Integral Type	Integral Type	Integral Type	Integral Type	Integral Type	Integral Type

Item \ Area				EUROPE			
Body Type				5-Door Liftback		5-Door Wagon	
Vehicle Grade				MID ELEGANT		ENTRY	
Model Code				CDT250R-ALMGYW	CDT250L-ALMGYW	ZZT250L-AWMNKW	ZZT251R-AWMNKW
Major Dimension & Vehicel Weights	Overall	Length	mm (in.)	4630 (182.3)	4630 (182.3)	4700 (185.0)	4700 (185.0)
		Width	mm (in.)	1760 (69.3)	1760 (69.3)	1760 (69.3)	1760 (69.3)
		Height	mm (in.)	1480 (58.3)	1480 (58.3)	1525 (60.0)	1525 (60.0)
	Wheel Base		mm (in.)	2700 (106.3)	2700 (106.3)	2700 (106.3)	2700 (106.3)
	Tread	Front	mm (in.)	1506 (59.3)	1506 (59.3)	1506 (59.3)	1506 (59.3)
		Rear	mm (in.)	1510 (59.4)	1510 (59.4)	1510 (59.4)	1510 (59.4)
	Room	Length	mm (in.)	2090 (82.3)	2090 (82.3)	2090 (82.3)	2090 (82.3)
		Width	mm (in.)	1485 (58.5)	1485 (58.5)	1485 (58.5)	1485 (58.5)
		Height	mm (in.)	1210 (47.6), 1160 (45.7)*1	1210 (47.6), 1160 (45.7)*1	1210 (47.6), 1160 (45.7)*1	1210 (47.6), 1160 (45.7)*1
	Overhang	Front	mm (in.)	910 (35.8)	910 (35.8)	910 (35.8)	910 (35.8)
		Rear	mm (in.)	1025 (40.4)	1025 (40.4)	1095 (43.1)	1095 (43.1)
	Min. Running Ground Clearance		mm (in.)	135 (5.3), 155 (6.1)*2	135 (5.3), 155 (6.1)*2	135 (5.3), 155 (6.1)*2	135 (5.3), 155 (6.1)*2
	Angle of Approach		degrees	13.1°, 14.5°*2	13.1°, 14.5°*2	13.1°, 14.5°*2	13.1°, 14.5°*2
	Angle of Departure		degrees	18.7°, 20.1°*2	18.7°, 20.1°*2	18.7°, 19.2°*2	18.7°, 19.2°*2
	Curb Weight	Front	kg (lb)	845 - 895 (1863 - 1973)	845 - 895 (1863 - 1973)	715 - 750 (1576 - 1653)	715 - 750 (1576 - 1653)
		Rear	kg (lb)	555 - 570 (1224 - 1257)	555 - 570 (1224 - 1257)	580 - 590 (1279 - 1301)	580 - 595 (1279 - 1312)
		Total	kg (lb)	1400 - 1465 (3087 - 3230)	1400 - 1465 (3087 - 3230)	1295 - 1340 (2855 - 2954)	1295 - 1345 (2855 - 2965)
	Gross Vehicle Weight	Front	kg (lb)	985 (2172)	985 (2172)	840 (1852)	840 (1852)
		Rear	kg (lb)	985 (2172)	985 (2172)	980 (2161)	980 (2161)
		Total	kg (lb)	1970 (4344)	1970 (4344)	1820 (4013)	1820 (4013)
	Fuel Tank Capacity		ℓ (Imp.gal.)	60 (15.9, 13.2)	60 (15.9, 13.2)	60 (15.9, 13.2)	60 (15.9, 13.2)
	Luggage Compartment Capacity		m^3 (cu.ft.)	0.510 (18.0)	0.510 (18.0)	0.520 (18.4)	0.520 (18.4)
Performance	Max. Speed		km / h (mph)	195 (121)	195 (121)	185 (115)	195 (121)
	Max. Cruising Speed		km / h (mph)	—	—	—	—
	Acceleration	0 to 100 km / h	sec.	11.2	11.2	12.2	10.5
		0 to 400 m	sec.	17.7	17.7	18.2	17.2
	Max. Permissible Speed	1st Gear	km / h (mph)	45 (27)	45 (27)	47 (29)	51 (31)
		2nd Gear	km / h (mph)	84 (52)	84 (52)	87 (54)	95 (59)
		3rd Gear	km / h (mph)	128 (79)	128 (79)	127 (78)	139 (86)
		4th Gear	km / h (mph)	176 (109)	176 (109)	172 (106)	176 (109)
	Min. Turning Radius	Tire	m (ft.)	5.6 (18.4)	5.6 (18.4)	5.4 (17.7)	5.4 (17.7)
		Body	m (ft.)	5.995 (19.7)	5.995 (19.7)	5.75 (18.9)	5.75 (18.9)
Engine	Engine Type			1CD-FTV	1CD-FTV	3ZZ-FE	1ZZ-FE
	Valve Mechanism			16-Valve, DOHC	16-Valve, DOHC	16-Valve, DOHC	16-Valve, DOHC
	Bore x Stroke		mm (in.)	82.2 x 94.0 (3.24 x 3.70)	82.2 x 94.0 (3.24 x 3.70)	79.0 x 81.5 (3.11 x 3.21)	79.0 x 91.5 (3.11 x 3.60)
	Displacement		cm^3 (cu.in.)	1995 (121.7)	1995 (121.7)	1598 (97.5)	1794 (109.5)
	Compression Ratio			17.8	17.8	10.5	10.0
	Carburetor Type or Injection Pump Type (Diesel)			Common-Rail Type	Common-Rail Type	EFI	EFI
	Research Octane No. or Cetane No. (Diesel)			48 or higher	48 or higher	95 or higher	95 or higher
	Max. Output (EEC)		kW / rpm	85 / 3600	85 / 3600	81 / 6000	95 / 6000
	Max. Torque (EEC)		N·m / rpm	280 / 2000 - 2200	280 / 2000 - 2200	150 / 3800	170 / 4200
Engine Electric	Battery Capacity (5HR)		Voltage & Amp. hr.	12 - 60	12 - 60	12 - 32, 48*3	12 - 32, 48*3
	Alternator Output		Watts	1200	1200	960, 1080*3	960, 1080*3
	Starter Output		kW	2.0	2.0	1.3	1.3
Chassis	Clutch Type			Dry, Single Plate	Dry, Single Plate	Dry, Single Plate	Dry, Single Plate
	Transaxle Type			E357	E357	C50	C250
	Transmission Gear Ratio	In First		3.538	3.538	3.545	3.545
		In Second		1.913	1.913	1.904	1.904
		In Third		1.258	1.258	1.310	1.310
		In Fourth		0.918	0.918	0.969	1.031
		In Fifth		0.690	0.690	0.815	0.815
		In Reverse		3.583	3.583	3.250	3.250
	Counter Gear Ratio			—	—	—	—
	Differential Gear Ratio (Final)			3.684	3.684	4.312	3.941
	Brake Type	Front		Ventilated Disc	Ventilated Disc	Ventilated Disc	Ventilated Disc
		Rear		Solid Disc	Solid Disc	Solid Disc	Solid Disc
	Parking Brake Type			Drum	Drum	Drum	Drum
	Brake Booster Type and Size		in.	Tandem 8" + 9"	Tandem 8" + 9"	Tandem 8" + 9"	Tandem 8" + 9"
	Proportioning Valve Type			—	—	—	—
	Suspension Type	Front		MacPherson Strut.	MacPherson Strut.	MacPherson Strut.	MacPherson Strut.
		Rear		Double Wishbone	Double Wishbone	Double Wishbone	Double Wishbone
	Stabilizer Bar	Front		STD	STD	STD	STD
		Rear		STD	STD	STD	STD
	Steering Gear Type			Rack and Pinion	Rack and Pinion	Rack and Pinion	Rack and Pinion
	Steering Gear Ratio (Overall)			16.1	16.1	17.5	17.5
	Power Steering Type			Integral Type	Integral Type	EPS	EPS

*1: With Sun Roof
*2: Rough Road Pack
*3: Option

EUROPE					
5-Door Wagon					
ENTRY		MID TECHNICAL			MID ELEGANT
ZZT251L-AWMNKW	ZZT251L-AWPNKW	ZZT251R-AWMEKW	ZZT251L-AWMEKW	ZZT251L-AWPEKW	ZZT251R-AWMGKW
4700 (185.0)	4700 (185.0)	4700 (185.0)	4700 (185.0)	4700 (185.0)	4700 (185.0)
1760 (69.3)	1760 (69.3)	1760 (69.3)	1760 (69.3)	1760 (69.3)	1760 (69.3)
1525 (60.0)	1525 (60.0)	1525 (60.0)	1525 (60.0)	1525 (60.0)	1525 (60.0)
2700 (106.3)	2700 (106.3)	2700 (106.3)	2700 (106.3)	2700 (106.3)	2700 (106.3)
1506 (59.3)	1506 (59.3)	1506 (59.3)	1506 (59.3)	1506 (59.3)	1506 (59.3)
1510 (59.4)	1510 (59.4)	1510 (59.4)	1510 (59.4)	1510 (59.4)	1510 (59.4)
2090 (82.3)	2090 (82.3)	2090 (82.3)	2090 (82.3)	2090 (82.3)	2090 (82.3)
1485 (58.5)	1485 (58.5)	1485 (58.5)	1485 (58.5)	1485 (58.5)	1485 (58.5)
1210 (47.6), 1160 (45.7)*1	1210 (47.6), 1160 (45.7)*1	1210 (47.6), 1160 (45.7)*1	1210 (47.6), 1160 (45.7)*1	1210 (47.6), 1160 (45.7)*1	1210 (47.6), 1160 (45.7)*1
910 (35.8)	910 (35.8)	910 (35.8)	910 (35.8)	910 (35.8)	910 (35.8)
1095 (43.1)	1095 (43.1)	1095 (43.1)	1095 (43.1)	1095 (43.1)	1095 (43.1)
135 (5.3), 155 (6.1)*2	135 (5.3), 155 (6.1)*2	135 (5.3), 155 (6.1)*2	135 (5.3), 155 (6.1)*2	135 (5.3), 155 (6.1)*2	135 (5.3), 155 (6.1)*2
13.1°, 14.5°*2	13.1°, 14.5°*2	13.1°, 14.5°*2	13.1°, 14.5°*2	13.1°, 14.5°*2	13.1°, 14.5°*2
18°, 19.2°*2	18°, 19.2°*2	18°, 19.2°*2	18°, 19.2°*2	18°, 19.2°*2	18°, 19.2°*2
715 - 750 (1576 - 1653)	745 - 775 (1642 - 1709)	715 - 750 (1576 - 1653)	715 - 750 (1576 - 1653)	745 - 775 (1642 - 1709)	715 - 750 (1576 - 1653)
580 - 595 (1279 - 1312)	580 - 600 (1279 - 1323)	580 - 595 (1279 - 1312)	580 - 595 (1279 - 1312)	580 - 600 (1279 - 1323)	580 - 595 (1279 - 1312)
1295 - 1345 (2855 - 2965)	1325 - 1375 (2921 - 3032)	1295 - 1345 (2855 - 2965)	1295 - 1345 (2855 - 2965)	1325 - 1375 (2921 - 3032)	1295 - 1345 (2855 - 2965)
840 (1852)	840 (1852)	840 (1852)	840 (1852)	840 (1852)	840 (1852)
980 (2161)	980 (2161)	980 (2161)	980 (2161)	980 (2161)	980 (2161)
1820 (4013)	1820 (4013)	1820 (4013)	1820 (4013)	1820 (4013)	1820 (4013)
60 (15.9, 13.2)	60 (15.9, 13.2)	60 (15.9, 13.2)	60 (15.9, 13.2)	60 (15.9, 13.2)	60 (15.9, 13.2)
0.520 (18.4)	0.520 (18.4)	0.520 (18.4)	0.520 (18.4)	0.520 (18.4)	0.520 (18.4)
195 (121)	180 (112)	195 (121)	195 (121)	180 (112)	195 (121)
—	—	—	—	—	—
10.5	11.8	10.5	10.5	11.8	10.5
17.2	18.0	17.2	17.2	18.0	17.2
51 (31)	59 (36)	51 (31)	51 (31)	59 (36)	51 (31)
95 (59)	109 (67)	95 (59)	95 (59)	109 (67)	95 (59)
139 (86)	169 (105)	139 (86)	139 (86)	169 (105)	139 (86)
176 (109)	—	176 (109)	176 (109)	—	176 (109)
5.4 (17.7)	5.4 (17.7)	5.4 (17.7)	5.4 (17.7)	5.4 (17.7)	5.4 (17.7)
5.75 (18.9)	5.75 (18.9)	5.75 (18.9)	5.75 (18.9)	5.75 (18.9)	5.75 (18.9)
1ZZ-FE	1ZZ-FE	1ZZ-FE	1ZZ-FE	1ZZ-FE	1ZZ-FE
16-Valve, DOHC	16-Valve, DOHC	16-Valve, DOHC	16-Valve, DOHC	16-Valve, DOHC	16-Valve, DOHC
79.0 x 91.5 (3.11 x 3.60)	79.0 x 91.5 (3.11 x 3.60)	79.0 x 91.5 (3.11 x 3.60)	79.0 x 91.5 (3.11 x 3.60)	79.0 x 91.5 (3.11 x 3.60)	79.0 x 91.5 (3.11 x 3.60)
1794 (109.5)	1794 (109.5)	1794 (109.5)	1794 (109.5)	1794 (109.5)	1794 (109.5)
10.0	10.0	10.0	10.0	10.0	10.0
EFI	EFI	EFI	EFI	EFI	EFI
95 or higher	95 or higher	95 or higher	95 or higher	95 or higher	95 or higher
95 / 6000	95 / 6000	95 / 6000	95 / 6000	95 / 6000	95 / 6000
170 / 4200	170 / 4200	170 / 4200	170 / 4200	170 / 4200	170 / 4200
12 - 32, 48*2	12 - 32, 48*2	12 - 32, 48*2	12 - 32, 48*2	12 - 32, 48*2	12 - 32, 48*2
960, 1080*2	960, 1080*2	960, 1080*2	960, 1080*2	960, 1080*2	960, 1080*2
1.3	1.3	1.3	1.3	1.3	1.3
Dry, Single Plate	—	Dry, Single Plate	Dry, Single Plate	—	Dry, Single Plate
C250	U341E	C250	C250	U341E	C250
3.545	2.847	3.545	3.545	2.847	3.545
1.904	1.552	1.904	1.904	1.552	1.904
1.310	1.000	1.310	1.310	1.000	1.310
1.031	0.700	1.031	1.031	0.700	1.031
0.815	—	0.815	0.815	—	0.815
3.250	2.343	3.250	3.250	2.343	3.250
—	—	—	—	—	—
3.941	4.237	3.941	3.941	4.237	3.941
Ventilated Disc	Ventilated Disc	Ventilated Disc	Ventilated Disc	Ventilated Disc	Ventilated Disc
Solid Disc	Solid Disc	Solid Disc	Solid Disc	Solid Disc	Solid Disc
Drum	Drum	Drum	Drum	Drum	Drum
Tandem 8” + 9”	Tandem 8” + 9”	Tandem 8” + 9”	Tandem 8” + 9”	Tandem 8” + 9”	Tandem 8” + 9”
—	—	—	—	—	—
MacPherson Strut.	MacPherson Strut.	MacPherson Strut.	MacPherson Strut.	MacPherson Strut.	MacPherson Strut.
Double Wishbone	Double Wishbone	Double Wishbone	Double Wishbone	Double Wishbone	Double Wishbone
STD	STD	STD	STD	STD	STD
STD	STD	STD	STD	STD	STD
Rack and Pinion	Rack and Pinion	Rack and Pinion	Rack and Pinion	Rack and Pinion	Rack and Pinion
17.5	17.5	17.5	17.5	17.5	17.5
EPS	EPS	EPS	EPS	EPS	EPS

Item \ Area				EUROPE			
Body Type				5-Door Wagon			
Vehicle Grade				MID ELEGANT		MID TECHNICAL	MID ELEGANT
Model Code				ZZT251L-AWMGKW	ZZT251L-AWPGKW	AZT250L-AWPEKW	AZT250L-AWPGKW
Major Dimension & Vehicle Weights	Overall	Length	mm (in.)	4700 (185.0)	4700 (185.0)	4700 (185.0)	4700 (185.0)
		Width	mm (in.)	1760 (69.3)	1760 (69.3)	1760 (69.3)	1760 (69.3)
		Height	mm (in.)	1525 (60.0)	1525 (60.0)	1525 (60.0)	1525 (60.0)
	Wheel Base		mm (in.)	2700 (106.3)	2700 (106.3)	2700 (106.3)	2700 (106.3)
	Tread	Front	mm (in.)	1506 (59.3)	1506 (59.3)	1506 (59.3)	1506 (59.3)
		Rear	mm (in.)	1510 (59.4)	1510 (59.4)	1510 (59.4)	1510 (59.4)
	Room	Length	mm (in.)	2090 (82.3)	2090 (82.3)	2090 (82.3)	2090 (82.3)
		Width	mm (in.)	1485 (58.5)	1485 (58.5)	1485 (58.5)	1485 (58.5)
		Height	mm (in.)	1210 (47.6), 1160 (45.7)*1	1210 (47.6), 1160 (45.7)*1	1210 (47.6), 1160 (45.7)*1	1210 (47.6), 1160 (45.7)*1
	Overhang	Front	mm (in.)	910 (35.8)	910 (35.8)	910 (35.8)	910 (35.8)
		Rear	mm (in.)	1095 (43.1)	1095 (43.1)	1095 (43.1)	1095 (43.1)
	Min. Running Ground Clearance		mm (in.)	135 (5.3), 155 (6.1)*2	135 (5.3), 155 (6.1)*2	135 (5.3), 155 (6.1)*2	135 (5.3), 155 (6.1)*2
	Angle of Approach		degrees	13.1°, 14.5°*2	13.1°, 14.5°*2	13.1°, 14.5°*2	13.1°, 14.5°*2
	Angle of Departure		degrees	18°, 19.2°*2	18°, 19.2°*2	18°, 19.2°*2	18°, 19.2°*2
	Curb Weight	Front	kg (lb)	715 - 750 (1576 - 1653)	745 - 775 (1642 - 1709)	795 - 830 (1753 - 1830)	795 - 830 (1753 - 1830)
		Rear	kg (lb)	580 - 595 (1279 - 1312)	580 - 600 (1279 - 1323)	570 - 590 (1257 - 1301)	570 - 590 (1257 - 1301)
		Total	kg (lb)	1295 - 1345 (2855 - 2965)	1325 - 1375 (2921 - 3032)	1365 - 1420 (3009 - 3131)	1365 - 1420 83010 - 3131)
	Gross Vehicle Weight	Front	kg (lb)	840 (1852)	840 (1852)	915 (2017)	915 (2017)
		Rear	kg (lb)	980 (2161)	980 (2161)	975 (2150)	975 (2150)
		Total	kg (lb)	1820 (4013)	1820 (4013)	1890 (4167)	1890 (4167)
	Fuel Tank Capacity		ℓ (Imp.gal.)	60 (15.9, 13.2)	60 (15.9, 13.2)	60 (15.9, 13.2)	60 (15.9, 13.2)
	Luggage Compartment Capacity		m^3 (cu.ft.)	0.520 (18.4)	0.520 (18.4)	0.520 (18.4)	0.520 (18.4)
Performance	Max. Speed		km / h (mph)	195 (121)	180 (112)	185 (115)	185 (115)
	Max. Cruising Speed		km / h (mph)	—	—	—	—
	Acceleration	0 to 100 km / h	sec.	10.5	11.8	11.3	11.3
		0 to 400 m	sec.	17.2	18.0	17.7	17.7
	Max. Permissible Speed	1st Gear	km / h (mph)	51 (31)	59 (36)	62 (38)	62 (38)
		2nd Gear	km / h (mph)	95 (59)	109 (67)	111 (68)	111 (68)
		3rd Gear	km / h (mph)	139 (86)	169 (105)	174 (108)	174 (108)
		4th Gear	km / h (mph)	176 (109)	—	—	—
	Min. Turning Radius	Tire	m (ft.)	5.4 (17.7)	5.4 (17.7)	5.6 (18.4)	5.6 (18.4)
		Body	m (ft.)	5.75 (18.9)	5.75 (18.9)	5.995 (19.7)	5.995 (19.7)
Engine	Engine Type			1ZZ-FE	1ZZ-FE	1AZ-FE	1AZ-FE
	Valve Mechanism			16-Valve, DOHC	16-Valve, DOHC	16-Valve, DOHC	16-Valve, DOHC
	Bore x Stroke		mm (in.)	79.0 x 91.5 (3.11 x 3.60)	79.0 x 91.5 (3.11 x 3.60)	86.0 x 86.0 (3.39 x 3.39)	86.0 x 86.0 (3.39 x 3.39)
	Displacement		cm^3 (cu.in.)	1794 (109.5)	1794 (109.5)	1998 (121.9)	1998 (121.9)
	Compression Ratio			10.0	10.0	9.8	9.8
	Carburetor Type or Injection Pump Type (Diesel)			EFI	EFI	EFI	EFI
	Research Octane No. or Cetane No. (Diesel)			95 or higher	95 or higher	95 or higher	95 or higher
	Max. Output (EEC)		kW / rpm	95 / 6000	95 / 6000	108 / 6000	108 / 6000
	Max. Torque (EEC)		N·m / rpm	170 / 4200	170 / 4200	192 / 4000	192 / 4000
Engine Electric	Battery Capacity (5HR)		Voltage & Amp. hr.	12 - 32, 48*3	12 - 32, 48*3	12 - 32, 48*3	12 - 32, 48*3
	Alternator Output		Watts	960, 1080*3	960, 1080*3	1200	1200
	Starter Output		kW	1.3	1.3	1.3	1.3
Chassis	Clutch Type			Dry, Single Plate	—	—	—
	Transaxle Type			C250	U341E	U241E	U241E
	Transmission Gear Ratio	In First		3.545	2.847	3.943	3.943
		In Second		1.904	1.552	2.197	2.197
		In Third		1.310	1.000	1.413	1.413
		In Fourth		1.031	0.700	1.020	1.020
		In Fifth		0.815	—	—	—
		In Reverse		3.250	2.343	3.145	3.145
	Counter Gear Ratio				—	—	—
	Differential Gear Ratio (Final)			3.941	4.237	2.923	2.923
	Brake Type	Front		Ventilated Disc	Ventilated Disc	Ventilated Disc	Ventilated Disc
		Rear		Solid Disc	Solid Disc	Solid Disc	Solid Disc
	Parking Brake Type			Drum	Drum	Drum	Drum
	Brake Booster Type and Size		in.	Tandem 8" + 9"	Tandem 8" + 9"	Tandem 8" + 9"	Tandem 8" + 9"
	Proportioning Valve Type			—	—	—	—
	Suspension Type	Front		MacPherson Strut.	MacPherson Strut.	MacPherson Strut.	MacPherson Strut.
		Rear		Double Wishbone	Double Wishbone	Double Wishbone	Double Wishbone
	Stabilizer Bar	Front		STD	STD	STD	STD
		Rear		STD	STD	STD	STD
	Steering Gear Type			Rack and Pinion	Rack and Pinion	Rack and Pinion	Rack and Pinion
	Steering Gear Ratio (Overall)			17.5	17.5	16.1	16.1
	Power Steering Type			EPS	EPS	Integral Type	Integral Type

*1: With Sun Roof
*2: Rough Road Pack
*3: Option
*4: Snow Mord Type

EUROPE					
5-Door Wagon					
MID TECHNICAL				MID ELEGANT	
AZT250R-AWMEHW	AZT250L-AWMEHW	AZT250R-AWPEHW	AZT250L-AWPEHW	AZT250R-AWMGHW	AZT250L-AWMGHW
4700 (185.0)	4700 (185.0)	4700 (185.0)	4700 (185.0)	4700 (185.0)	4700 (185.0)
1760 (69.3)	1760 (69.3)	1760 (69.3)	1760 (69.3)	1760 (69.3)	1760 (69.3)
1525 (60.0)	1525 (60.0)	1525 (60.0)	1525 (60.0)	1525 (60.0)	1525 (60.0)
2700 (106.3)	2700 (106.3)	2700 (106.3)	2700 (106.3)	2700 (106.3)	2700 (106.3)
1506 (59.3)	1506 (59.3)	1506 (59.3)	1506 (59.3)	1506 (59.3)	1506 (59.3)
1510 (59.4)	1510 (59.4)	1510 (59.4)	1510 (59.4)	1510 (59.4)	1510 (59.4)
2090 (82.3)	2090 (82.3)	2090 (82.3)	2090 (82.3)	2090 (82.3)	2090 (82.3)
1485 (58.5)	1485 (58.5)	1485 (58.5)	1485 (58.5)	1485 (58.5)	1485 (58.5)
1210 (47.6), 1160 (45.7)*1	1210 (47.6), 1160 (45.7)*1	1210 (47.6), 1160 (45.7)*1	1210 (47.6), 1160 (45.7)*1	1210 (47.6), 1160 (45.7)*1	1210 (47.6), 1160 (45.7)*1
910 (35.8)	910 (35.8)	910 (35.8)	910 (35.8)	910 (35.8)	910 (35.8)
1095 (43.1)	1095 (43.1)	1095 (43.1)	1095 (43.1)	1095 (43.1)	1095 (43.1)
135 (5.3), 155 (6.1)*2	135 (5.3), 155 (6.1)*2	135 (5.3), 155 (6.1)*2	135 (5.3), 155 (6.1)*2	135 (5.3), 155 (6.1)*2	135 (5.3), 155 (6.1)*2
13.1°, 14.5°*2	13.1°, 14.5°*2	13.1°, 14.5°*2	13.1°, 14.5°*2	13.1°, 14.5°*2	13.1°, 14.5°*2
18°, 19.2°*2	18°, 19.2°*2	18°, 19.2°*2	18°, 19.2°*2	18°, 19.2°*2	18°, 19.2°*2
770 - 800 (1698 - 1764)	770 - 800 (1698 - 1764)	800 - 825 (1764 - 1819)	800 - 825 (1764 - 1819)	770 - 800 (1698 - 1764)	770 - 800 (1698 - 1764)
585 - 600 (1290 - 1323)	585 - 600 (1290 - 1323)	585 - 600 (1290 - 1323)	585 - 600 (1290 - 1323)	585 - 600 (1290 - 1323)	585 - 600 (1290 - 1323)
1355 - 1400 (2988 - 3087)	1355 - 1400 (2988 - 3087)	1385 - 1420 (3054 - 3131)	1385 - 1420 (3054 - 3131)	1355 - 1400 (2988 - 3087)	1355 - 1400 (2988 - 3087)
915 (2017)	915 (2017)	915 (2017)	915 (2017)	915 (2017)	915 (2017)
980 (2161)	980 (2161)	980 (2161)	980 (2161)	980 (2161)	980 (2161)
1895 (4178)	1895 (4178)	1895 (4178)	1895 (4178)	1895 (4178)	1895 (4178)
60 (15.9, 13.2)	60 (15.9, 13.2)	60 (15.9, 13.2)	60 (15.9, 13.2)	60 (15.9, 13.2)	60 (15.9, 13.2)
0.520 (18.4)	0.520 (18.4)	0.520 (18.4)	0.520 (18.4)	0.520 (18.4)	0.520 (18.4)
200 (124)	200 (124)	190 (118)	190 (118)	200 (124)	200 (124)
—	—	—	—	—	—
9.6	9.6	11.3	11.3	9.6	9.6
16.7	16.7	17.7	17.7	16.7	16.7
56 (34)	56 (34)	63 (39)	63 (39)	56 (34)	56 (34)
96 (59)	96 (59)	114 (71)	114 (71)	96 (59)	96 (59)
149 (92)	149 (92)	177 (110)	177 (110)	149 (92)	149 (92)
193 (119)	193 (119)	—	—	193 (119)	193 (119)
5.6 (18.4)	5.6 (18.4)	5.6 (18.4)	5.6 (18.4)	5.6 (18.4)	5.6 (18.4)
5.995 (19.7)	5.995 (19.7)	5.995 (19.7)	5.995 (19.7)	5.995 (19.7)	5.995 (19.7)
1AZ-FSE	1AZ-FSE	1AZ-FSE	1AZ-FSE	1AZ-FSE	1AZ-FSE
16-Valve, DOHC	16-Valve, DOHC	16-Valve, DOHC	16-Valve, DOHC	16-Valve, DOHC	16-Valve, DOHC
86.0 x 86.0 (3.39 x 3.39)	86.0 x 86.0 (3.39 x 3.39)	86.0 x 86.0 (3.39 x 3.39)	86.0 x 86.0 (3.39 x 3.39)	86.0 x 86.0 (3.39 x 3.39)	86.0 x 86.0 (3.39 x 3.39)
1998 (121.9)	1998 (121.9)	1998 (121.9)	1998 (121.9)	1998 (121.9)	1998 (121.9)
11.0	11.0	11.0	11.0	11.0	11.0
EFI	EFI	EFI	EFI	EFI	EFI
95 or higher	95 or higher	95 or higher	95 or higher	95 or higher	95 or higher
110 / 5700	110 / 5700	110 / 5700	110 / 5700	110 / 5700	110 / 5700
200 / 4000	200 / 4000	200 / 4000	200 / 4000	200 / 4000	200 / 4000
12 - 32, 48*3	12 - 32, 48*3	12 - 48	12 - 48	12 - 32, 48*3	12 - 32, 48*3
1200	1200	1200	1200	1200	1200
1.3, 1.6*3	1.3, 1.6*3	1.6	1.6	1.3, 1.6*3	1.3, 1.6*3
Dry, Single Plate	Dry, Single Plate	—	—	Dry, Single Plate	Dry, Single Plate
E354	E354	U241E*4	U241E*4	E354	E354
3.538	3.538	3.943	3.943	3.538	3.538
2.045	2.045	2.197	2.197	2.054	2.054
1.333	1.333	1.413	1.413	1.333	1.333
1.028	1.028	1.020	1.020	1.028	1.028
0.820	0.820	—	—	0.820	0.820
3.583	3.583	3.145	3.145	3.583	3.583
—	—	—	—	—	—
3.684	3.684	2.923	2.923	3.684	3.684
Ventilated Disc	Ventilated Disc	Ventilated Disc	Ventilated Disc	Ventilated Disc	Ventilated Disc
Solid Disc	Solid Disc	Solid Disc	Solid Disc	Solid Disc	Solid Disc
Drum	Drum	Drum	Drum	Drum	Drum
Tandem 8” + 9”	Tandem 8” + 9”	Tandem 8” + 9”	Tandem 8” + 9”	Tandem 8” + 9”	Tandem 8” + 9”
—	—	—	—	—	—
MacPherson Strut.	MacPherson Strut.	MacPherson Strut.	MacPherson Strut.	MacPherson Strut.	MacPherson Strut.
Double Wishbone	Double Wishbone	Double Wishbone	Double Wishbone	Double Wishbone	Double Wishbone
STD	STD	STD	STD	STD	STD
STD	STD	STD	STD	STD	STD
Rack and Pinion	Rack and Pinion	Rack and Pinion	Rack and Pinion	Rack and Pinion	Rack and Pinion
16.1	16.1	16.1	16.1	16.1	16.1
Integral Type	Integral Type	Integral Type	Integral Type	Integral Type	Integral Type

Item \ Area				EUROPE			
Body Type				5-Door Wagon			
Vehicle Grade				MID ELEGANT		ENTRY	
Model Code				AZT250R-AWPGHW	AZT250L-AWPGHW	CDT250R-AWMNYW	CDT250L-AWMNYW
Major Dimension & Vehicle Weights	Overall	Length	mm (in.)	4700 (185.0)	4700 (185.0)	4700 (185.0)	4700 (185.0)
		Width	mm (in.)	1760 (69.3)	1760 (69.3)	1760 (69.3)	1760 (69.3)
		Height	mm (in.)	1525 (60.0)	1525 (60.0)	1525 (60.0)	1525 (60.0)
	Wheel Base		mm (in.)	2700 (106.3)	2700 (106.3)	2700 (106.3)	2700 (106.3)
	Tread	Front	mm (in.)	1506 (59.3)	1506 (59.3)	1506 (59.3)	1506 (59.3)
		Rear	mm (in.)	1510 (59.4)	1510 (59.4)	1510 (59.4)	1510 (59.4)
	Room	Length	mm (in.)	2090 (82.3)	2090 (82.3)	2090 (82.3)	2090 (82.3)
		Width	mm (in.)	1485 (58.5)	1485 (58.5)	1485 (58.5)	1485 (58.5)
		Height	mm (in.)	1210 (47.6), 1160 (45.7)*1	1210 (47.6), 1160 (45.7)*1	1210 (47.6), 1160 (45.7)*1	1210 (47.6), 1160 (45.7)*1
	Overhang	Front	mm (in.)	910 (35.8)	910 (35.8)	910 (35.8)	910 (35.8)
		Rear	mm (in.)	1095 (43.1)	1095 (43.1)	1095 (43.1)	1095 (43.1)
	Min. Running Ground Clearance		mm (in.)	135 (5.3), 155 (6.1)*2	135 (5.3), 155 (6.1)*2	135 (5.3), 155 (6.1)*2	135 (5.3), 155 (6.1)*2
	Angle of Approach		degrees	13.1°, 14.5°*2	13.1°, 14.5°*2	13.1°, 14.5°*2	13.1°, 14.5°*2
	Angle of Departure		degrees	18°, 19.2°*2	18°, 19.2°*2	18°, 19.2°*2	18°, 19.2°*2
	Curb Weight	Front	kg (lb)	800 - 825 (1764 - 1819)	800 - 825 (1764 - 1819)	850 - 900 (1874 - 1984)	850 - 900 (1874 - 1984)
		Rear	kg (lb)	585 - 595 (1290 - 1312)	585 - 595 (1290 - 1312)	580 - 590 (1279 - 1301)	580 - 590 (1279 - 1301)
		Total	kg (lb)	1385 - 1420 (3054 - 3131)	1385 - 1420 (3054 - 3131)	1430 - 1490 (3153 - 3285)	1430 - 1490 (3153 - 3285)
	Gross Vehicle Weight	Front	kg (lb)	915 (2017)	915 (2017)	985 (2172)	985 (2172)
		Rear	kg (lb)	980 (2161)	980 (2161)	985 (2172)	985 (2172)
		Total	kg (lb)	1895 (4178)	1895 (4178)	1970 (4344)	1970 (4344)
	Fuel Tank Capacity		ℓ (Imp.gal.)	60 (15.9, 13.2)	60 (15.9, 13.2)	60 (15.9, 13.2)	60 (15.9, 13.2)
	Luggage Compartment Capacity		m^3 (cu.ft.)	0.520 (18.4)	0.520 (18.4)	0.520 (18.4)	0.520 (18.4)
Performance	Max. Speed		km / h (mph)	190 (118)	190 (118)	190 (118)	190 (118)
	Max. Cruising Speed		km / h (mph)	—	—	—	—
	Acceleration	0 to 100 km / h	sec.	11.3	11.3	11.4	11.4
		0 to 400 m	sec.	17.7	17.7	17.8	17.8
	Max. Permissible Speed	1st Gear	km / h (mph)	63 (39)	63 (39)	45 (27)	45 (27)
		2nd Gear	km / h (mph)	114 (71)	114 (71)	84 (52)	84 (52)
		3rd Gear	km / h (mph)	177 (110)	177 (110)	128 (79)	128 (79)
		4th Gear	km / h (mph)	—	—	176 (109)	176 (109)
	Min. Turning Radius	Tire	m (ft.)	5.6 (18.4)	5.6 (18.4)	5.6 (18.4)	5.6 (18.4)
		Body	m (ft.)	5.995 (19.7)	5.995 (19.7)	5.995 (19.7)	5.995 (19.7)
Engine	Engine Type			1AZ-FSE	1AZ-FSE	1CD-FTV	1CD-FTV
	Valve Mechanism			16-Valve, DOHC	16-Valve, DOHC	16-Valve, DOHC	16-Valve, DOHC
	Bore x Stroke		mm (in.)	86.0 x 86.0 (3.39 x 3.39)	86.0 x 86.0 (3.39 x 3.39)	82.2 x 94.0 (3.24 x 3.70)	82.2 x 94.0 (3.24 x 3.70)
	Displacement		cm^3 (cu.in.)	1998 (121.9)	1998 (121.9)	1995 (121.7)	1995 (121.7)
	Compression Ratio			11.0	11.0	17.8	17.8
	Carburetor Type or Injection Pump Type (Diesel)			EFI	EFI	Common-Rail Type	Common-Rail Type
	Research Octane No. or Cetane No. (Diesel)			95 or higher	95 or higher	48 or higher	48 or higher
	Max. Output (EEC)		kW / rpm	108 / 5700	108 / 5700	85 / 3600	85 / 3600
	Max. Torque (EEC)		N·m / rpm	196 / 4000	196 / 4000	280 / 2000 - 2200	280 / 2000 - 2200
Engine Electric	Battery Capacity (5HR)		Voltage & Amp. hr.	12 - 48	12 - 48	12 - 60	12 - 60
	Alternator Output		Watts	1200	1200	1200	1200
	Starter Output		kW	1.6	1.6	2.0	2.0
Chassis	Clutch Type			—	—	Dry, Single Plate	Dry, Single Plate
	Transaxle Type			U241E*4	U241E*4	E357	E357
	Transmission Gear Ratio	In First		3.943	3.943	3.538	3.538
		In Second		2.197	2.197	1.913	1.913
		In Third		1.413	1.413	1.258	1.258
		In Fourth		1.020	1.020	0.918	0.918
		In Fifth		—	—	0.690	0.690
		In Reverse		3.145	3.145	3.583	3.583
	Counter Gear Ratio			—	—	—	—
	Differential Gear Ratio (Final)			2.923	2.923	3.684	3.684
	Brake Type	Front		Ventilated Disc	Ventilated Disc	Ventilated Disc	Ventilated Disc
		Rear		Solid Disc	Solid Disc	Solid Disc	Solid Disc
	Parking Brake Type			Drum	Drum	Drum	Drum
	Brake Booster Type and Size		in.	Tandem 8" + 9"	Tandem 8" + 9"	Tandem 8" + 9"	Tandem 8" + 9"
	Proportioning Valve Type			—	—	—	—
	Suspension Type	Front		MacPherson Strut.	MacPherson Strut.	MacPherson Strut.	MacPherson Strut.
		Rear		Double Wishbone	Double Wishbone	Double Wishbone	Double Wishbone
	Stabilizer Bar	Front		STD	STD	STD	STD
		Rear		STD	STD	STD	STD
	Steering Gear Type			Rack and Pinion	Rack and Pinion	Rack and Pinion	Rack and Pinion
	Steering Gear Ratio (Overall)			16.1	16.1	16.1	16.1
	Power Steering Type			Integral Type	Integral Type	Integral Type	Integral Type

*1: With Sun Roof
*2: Rough Road Pack
*3: Option
*4: Snow Mord Type

EUROPE		GENERAL COUNTRIES		
5-Door Wagon		4-Door Sedan		
MID TECHNICAL	MID ELEGANT	ENTRY		
CDT250L-AWMEYW	CDT250L-AWMGYW	AZT250L-AEMNK	AZT250R-AEPNK	AZT250L-AEPNK
4700 (185.0)	4700 (185.0)	4630 (182.3)	4630 (182.3)	4630 (182.3)
1760 (69.3)	1760 (69.3)	1760 (69.3)	1760 (69.3)	1760 (69.3)
1525 (60.0)	1525 (60.0)	1480 (58.3)	1480 (58.3)	1480 (58.3)
2700 (106.3)	2700 (106.3)	2700 (106.3)	2700 (106.3)	2700 (106.3)
1506 (59.3)	1506 (59.3)	1506 (59.3)	1506 (59.3)	1506 (59.3)
1510 (59.4)	1510 (59.4)	1510 (59.4)	1510 (59.4)	1510 (59.4)
2090 (82.3)	2090 (82.3)	2090 (82.3)	2090 (82.3)	2090 (82.3)
1485 (58.5)	1485 (58.5)	1485 (58.5)	1485 (58.5)	1485 (58.5)
1210 (47.6), 1160 (45.7)*1	1210 (47.6), 1160 (45.7)*1	1210 (47.6), 1160 (45.7)*1	1210 (47.6), 1160 (45.7)*1	1210 (47.6), 1160 (45.7)*1
910 (35.8)	910 (35.8)	910 (35.8)	910 (35.8)	910 (35.8)
1095 (43.1)	1095 (43.1)	1025 (40.4)	1025 (40.4)	1025 (40.4)
135 (5.3), 155 (6.1)*2	135 (5.3), 155 (6.1)*2	135 (5.3), 155 (6.1)*2	135 (5.3), 155 (6.1)*2	135 (5.3), 155 (6.1)*2
13.1°, 14.5°*2	13.1°, 14.5°*2	13.1°, 14.5°*2	13.1°, 14.5°*2	13.1°, 14.5°*2
18°, 19.2°*2	18°, 19.2°*2	18°, 19.2°*2	18°, 19.2°*2	18°, 19.2°*2
860 - 900 (1896 - 1984)	860 - 900 (1896 - 1984)	750 - 780 (1653 - 1720)	780 - 810 (1720 - 1786)	780 - 810 (1720 - 1786)
580 - 595 (1279 - 1312)	580 - 595 (1279 - 1312)	525 - 530 (1157 - 1168)	525 - 530 (1157 - 1168)	525 - 530 (1157 - 1168)
1440 - 1495 (3175 - 3296)	1440 - 1495 (3175 - 3296)	1275 - 1310 (2810 - 2888)	1305 - 1340 (2877 - 2954)	1305 - 1340 (2877 - 2954)
985 (2172)	985 (2172)	890 (1962)	890 (1962)	890 (1962)
985 (2172)	985 (2172)	915 (2017)	915 (2017)	915 (2017)
1970 (4343)	1970 (4343)	1805 (3979)	1805 (3979)	1805 (3979)
60 (15.9, 13.2)	60 (15.9, 13.2)	60 (15.9, 13.2)	60 (15.9, 13.2)	60 (15.9, 13.2)
0.520 (18.4)	0.520 (18.4)	0.520 (18.4)	0.520 (18.4)	0.520 (18.4)
190 (118)	190 (118)	195 (121)	190 (121)	190 (121)
—	—	—	—	—
11.4	11.4	10.0	11.8	11.8
17.8	17.8	17.1	18.0	18.0
45 (27)	45 (27)	51 (31)	62 (38)	62 (38)
84 (52)	84 (52)	88 (54)	111 (68)	111 (68)
128 (79)	128 (79)	136 (86)	174 (108)	174 (108)
176 (109)	176 (109)	177 (109)	—	—
5.6 (18.4)	5.6 (18.4)	5.6 (18.4)	5.6 (18.4)	5.6 (18.4)
5.995 (19.7)	5.995 (19.7)	5.995 (19.7)	5.995 (19.7)	5.995 (19.7)
1CD-FTV	1CD-FTV	1AZ-FE	1AZ-FE	1AZ-FE
16-Valve, DOHC	16-Valve, DOHC	16-Valve, DOHC	16-Valve, DOHC	16-Valve, DOHC
82.2 x 94.0 (3.24 x 3.70)	82.2 x 94.0 (3.24 x 3.70)	86.0 x 86.0 (3.39 x 3.39)	86.0 x 86.0 (3.39 x 3.39)	86.0 x 86.0 (3.39 x 3.39)
1995 (121.7)	1995 (121.7)	1998 (121.9)	1998 (121.9)	1998 (121.9)
17.8	17.8	9.5	9.5	9.5
Common-Rail Type	Common-Rail Type	EFI	EFI	EFI
48 or higher	48 or higher	95 or higher	95 or higher	95 or higher
85 / 3600	85 / 3600	100 / 5600	100 / 5600	100 / 5600
280 / 2000 - 2200	280 / 2000 - 2200	190 / 4000	190 / 4000	190 / 4000
12 - 60	12 - 60	12 - 32, 48*2	12 - 32, 48*2	12 - 32, 48*2
1200	1200	1200	1200	1200
2.0	2.0	1.3	1.3	1.3
Dry, Single Plate	Dry, Single Plate	Dry, Single Plate	—	—
E357	E357	E354	U241E	U241E
3.538	3.538	3.538	3.943	3.943
1.913	1.913	2.045	2.197	2.197
1.258	1.258	1.333	1.413	1.413
0.918	0.918	1.028	1.020	1.020
0.690	0.690	0.820	—	—
3.583	3.583	3.583	3.145	3.145
—	—	—	—	—
3.684	3.684	3.944	3.120	3.120
Ventilated Disc	Ventilated Disc	Ventilated Disc	Ventilated Disc	Ventilated Disc
Solid Disc	Solid Disc	Solid Disc	Solid Disc	Solid Disc
Drum	Drum	Drum	Drum	Drum
Tandem 8” + 9”	Tandem 8” + 9”	Tandem 8” + 9”	Tandem 8” + 9”	Tandem 8” + 9”
—	—	—	—	—
MacPherson Strut.	MacPherson Strut.	MacPherson Strut.	MacPherson Strut.	MacPherson Strut.
Double Wishbone	Double Wishbone	Double Wishbone	Double Wishbone	Double Wishbone
STD	STD	STD	STD	STD
STD	STD	STD	STD	STD
Rack and Pinion	Rack and Pinion	Rack and Pinion	Rack and Pinion	Rack and Pinion
16.1	16.1	16.1	16.1	16.1
Integral Type	Integral Type	Integral Type	Integral Type	Integral Type

– MEMO –

– MEMO –

– MEMO –

BODY ELECTRICAL

MULTIPLEX COMMUNICATION

■ DESCRIPTION

Multiplex communication has been adopted in the body electrical system control of the new Avensis. A multiplex communication is used for body electrical system control and to achieve a slimmer wire harnesses configuration.

- On the new Avensis, BEAN (Body Electronics Area Network) and AVC-LAN (Audio Visual Communication – Local Area Network) are used. However, AVC-LAN is used on the multi display or multi-information display models.
- The BEAN in the new Avensis is established among the Engine ECU, combination meter (Meter ECU), A/C amplifier and integration relay (Body ECU); and between the combination meter (Meter ECU) and the theft deterrent ECU.

▶ BEAN System Diagram ◀

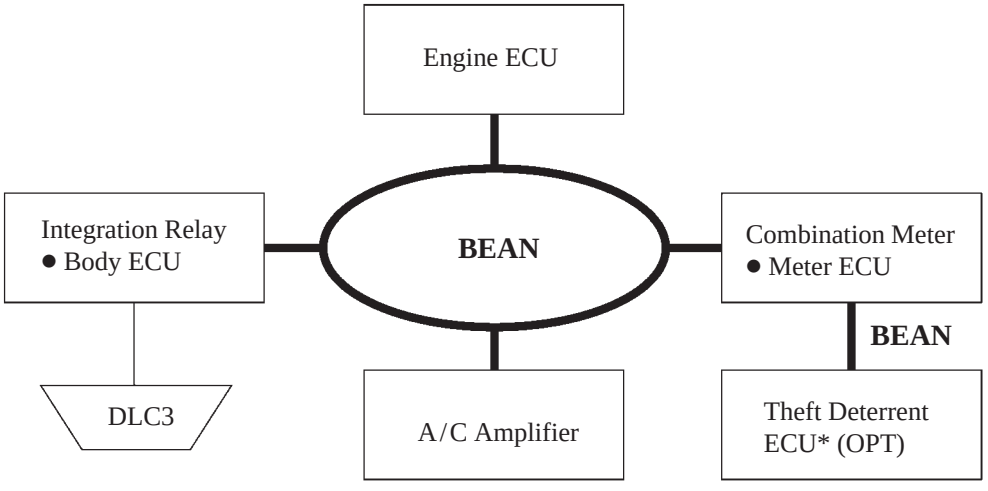

240BE15

*: Only for RHD model

- The AVC-LAN in the model with the multi display, which is centered on the multi display, is established among the navigation ECU, the audio head unit, and the combination meter (Meter ECU).
- The AVC-LAN in the model with the multi-information display is established between the combination meter (Meter ECU) and the multi-information display.

▶ AVC-LAN System Diagram ◀

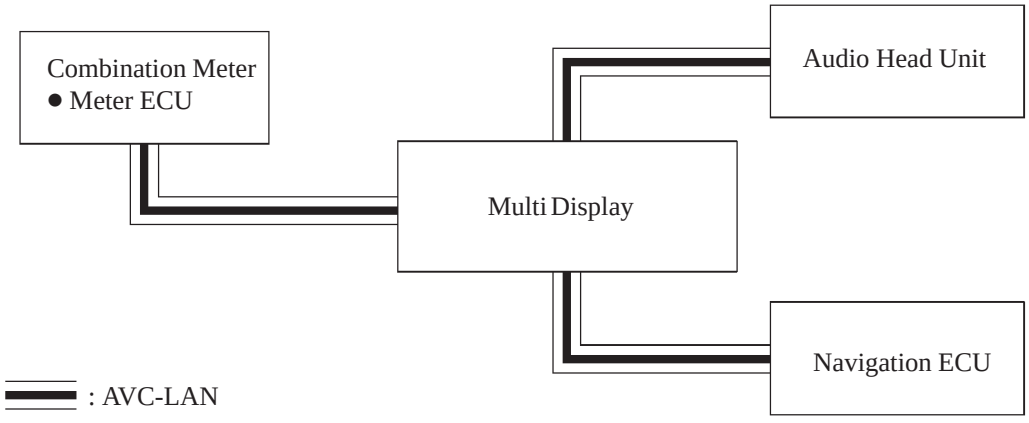

240BE25

with Multi Display Model

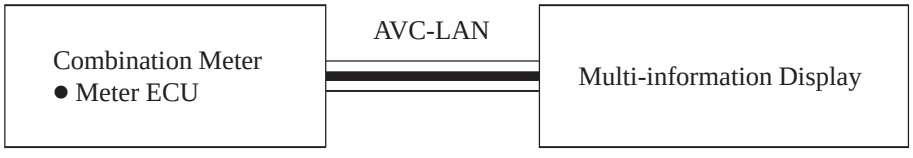

with Multi-information Display Model

240BE26

■LAYOUT OF BEAN COMPONENT

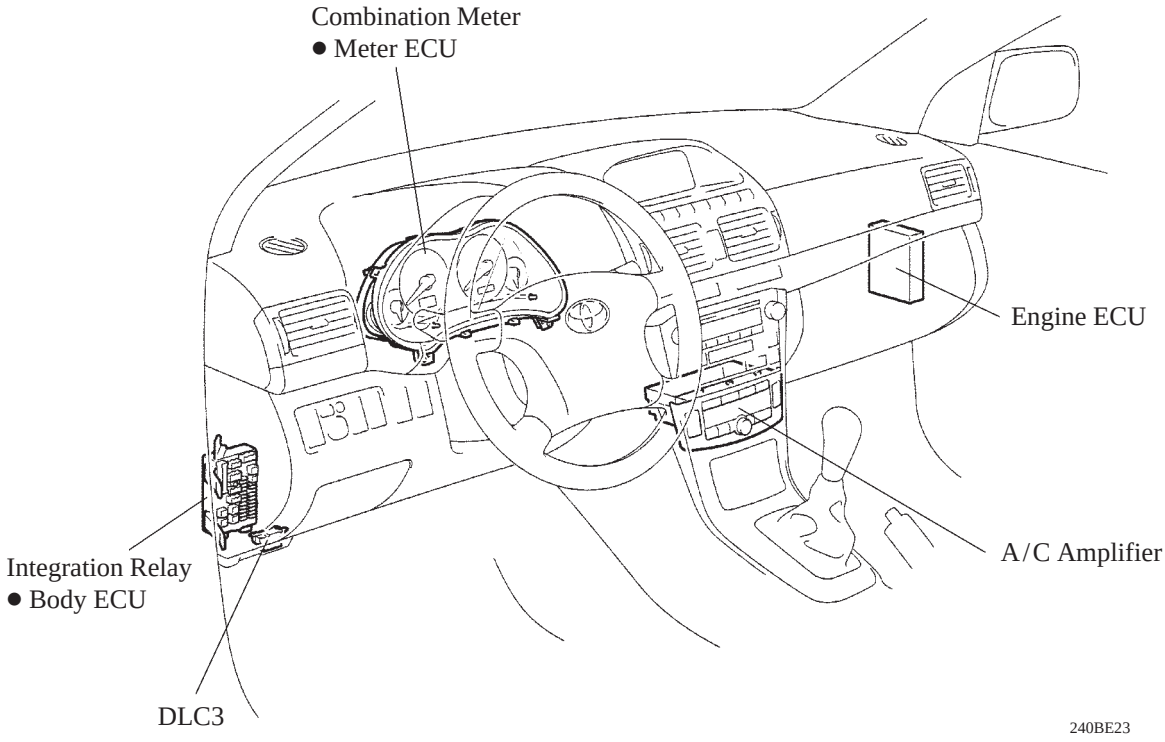

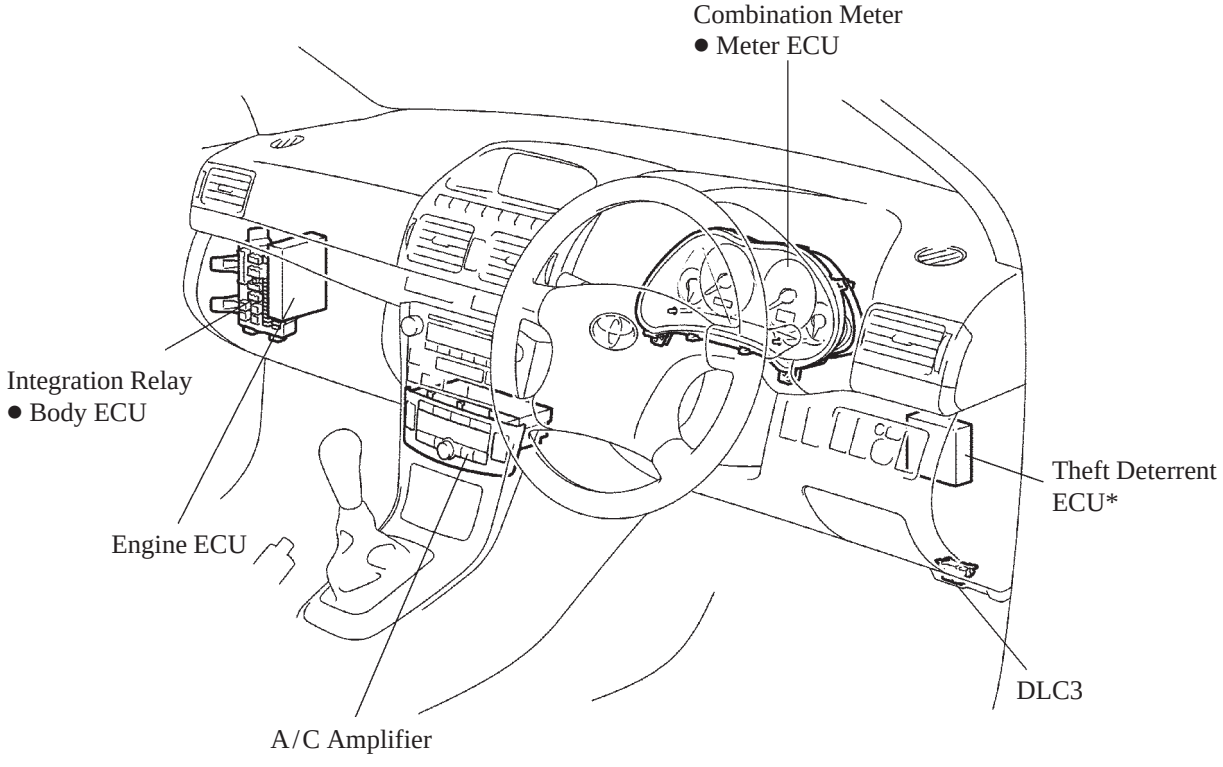

*: with Theft Deterrent System

■LAYOUT OF AVC-LAN COMPONENT

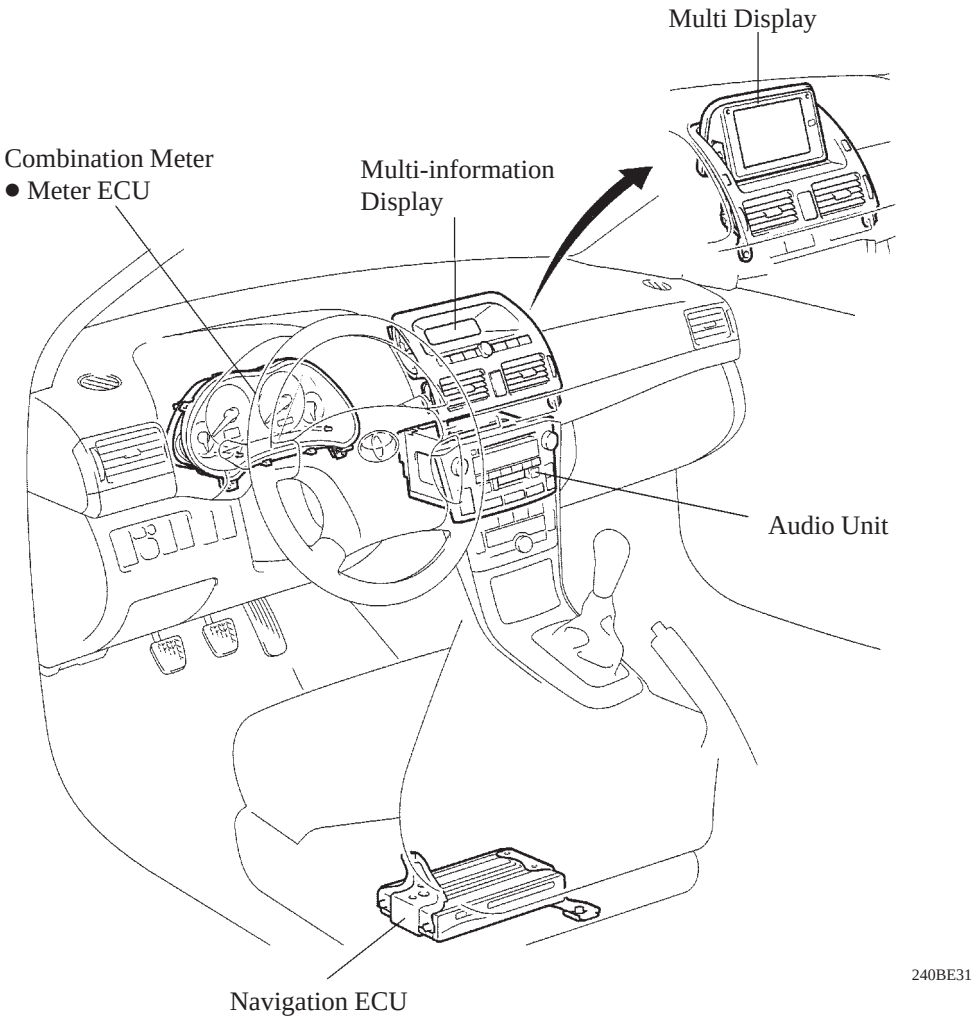

■BASIC OF MPX

1. General

In the conventional system, parallel communication is used to exchange information between ECUs. To transmit four pieces of information, for example, parallel communication requires four communication wires. In contrast, multiplex communication is used on serial communication, which converts multiple pieces of information into serial communication data. Thus, they can be transmitted through a single communication wire.

▶ Conceptual Drawing ◀

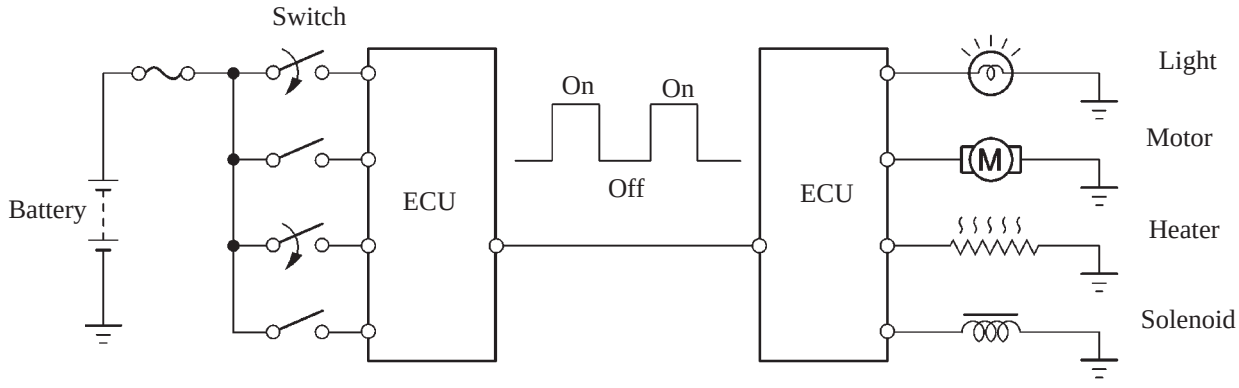

Serial Communication

240BE03

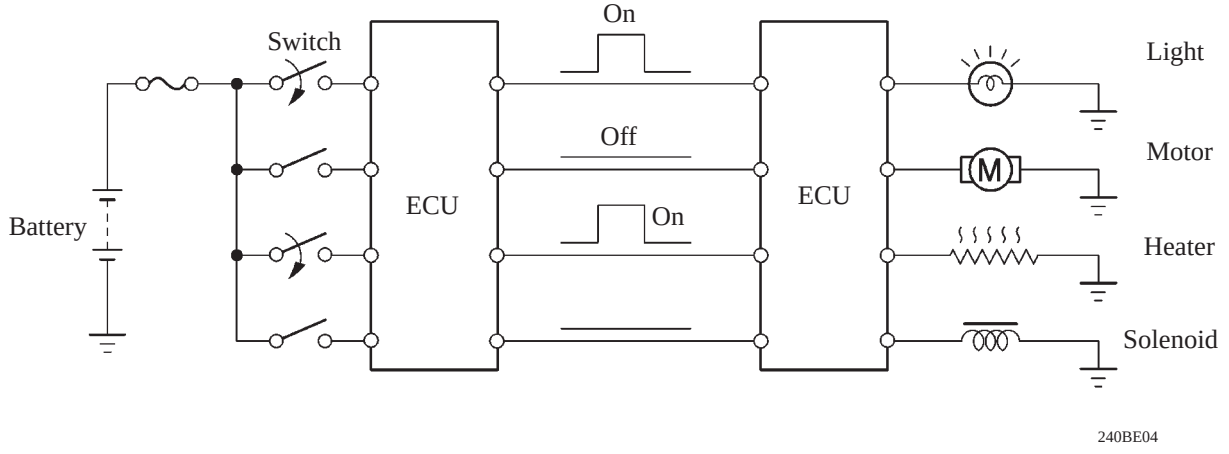

240BE04

Parallel Communication

- Serial communication data consists of bits and frames. A bit is the basic unit that represents the amount of information. A bit is represented by binary values “0” or “1”. A frame is a body of data that is transmitted together. A frame contains a header that indicates the beginning, and an end message that indicates the end.

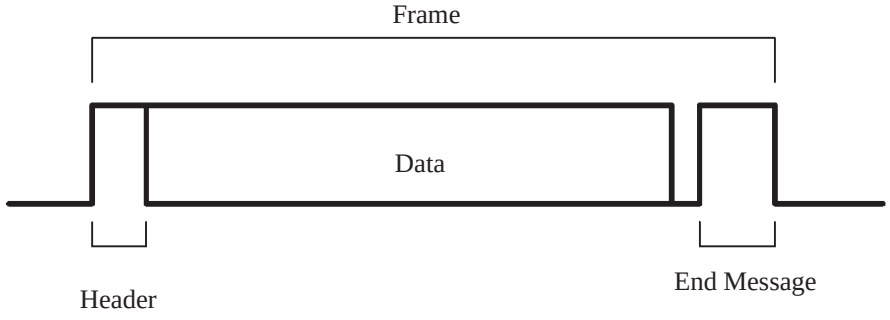

240BE05

2. Network Style

General

Based on serial communication, various ECUs are connected on a network to exchange various pieces of information. Such a system is called “Multiplex Communication”. There are three styles of networks: ring, star, and bus.

Ring Style

In this style of network, the ECUs are connected in a ring form. A feature of this style is that a signal that is output by a transmitting ECU circles the ring and returns to its original ECU.

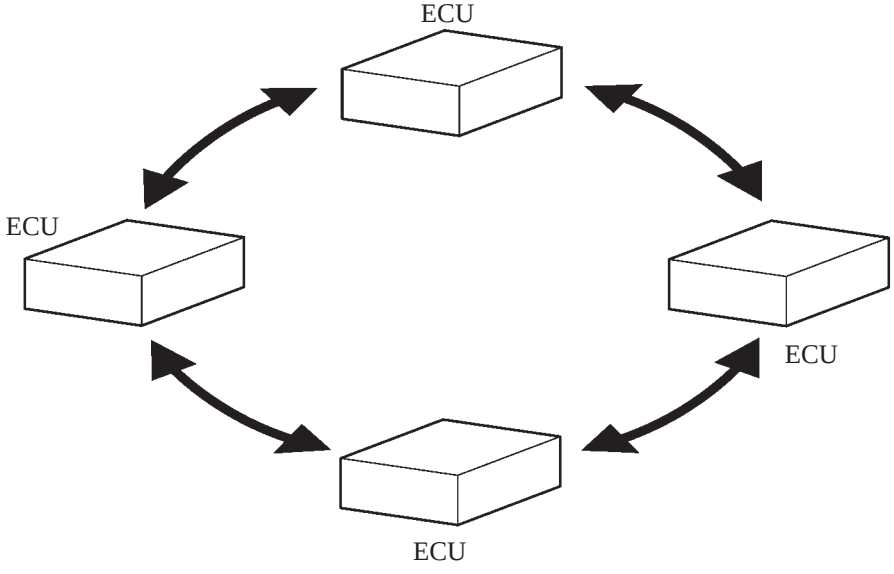

240BE06

Star Style

This style is centered on a master ECU, which holds a central control function. The ECUs are connected in a star shape. The ECUs cannot establish communication with other ECUs without passing through the master ECU.

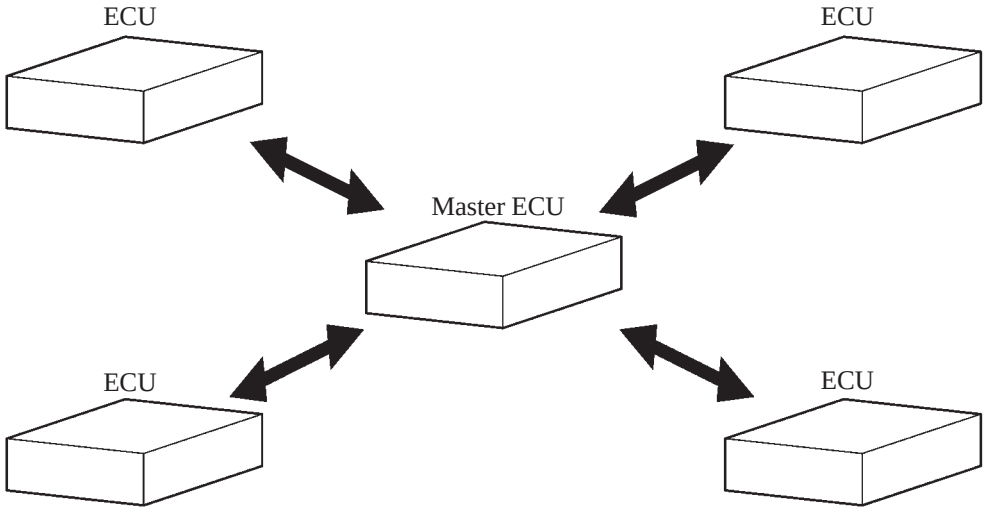

240BE07

Bus Style

In this style of network, all ECUs are connected to a single common communication wire. The transmitting ECUs output signals through a common communication wire and the receiving ECUs input data through a common communication wire.

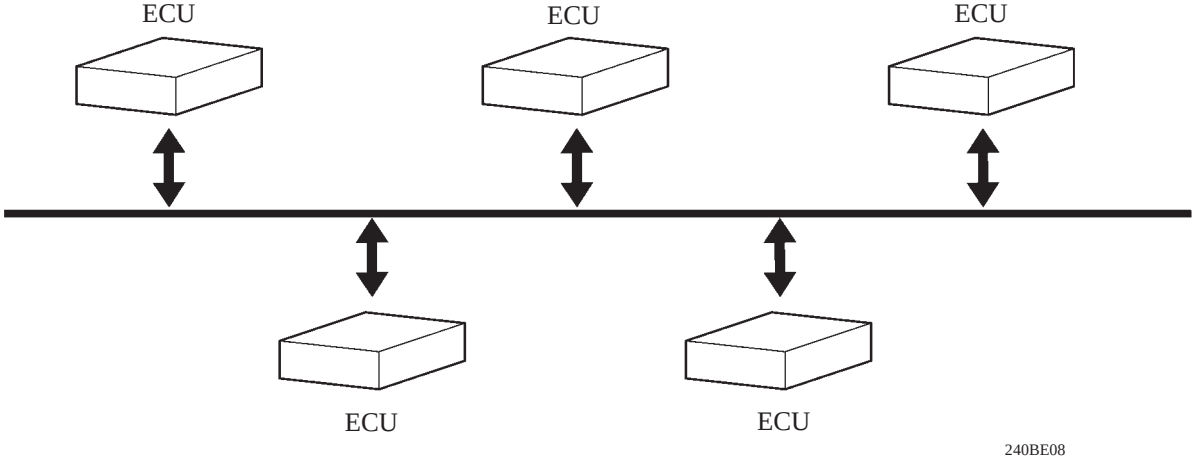

240BE08

— Reference —

- The BEAN on the Avensis uses the ring and bus styles of networks to connect four ECUs. This style of connection method is called a “Daisy Chain”. In a daisy chain, communication can be maintained even if there is an area that has an open circuit.

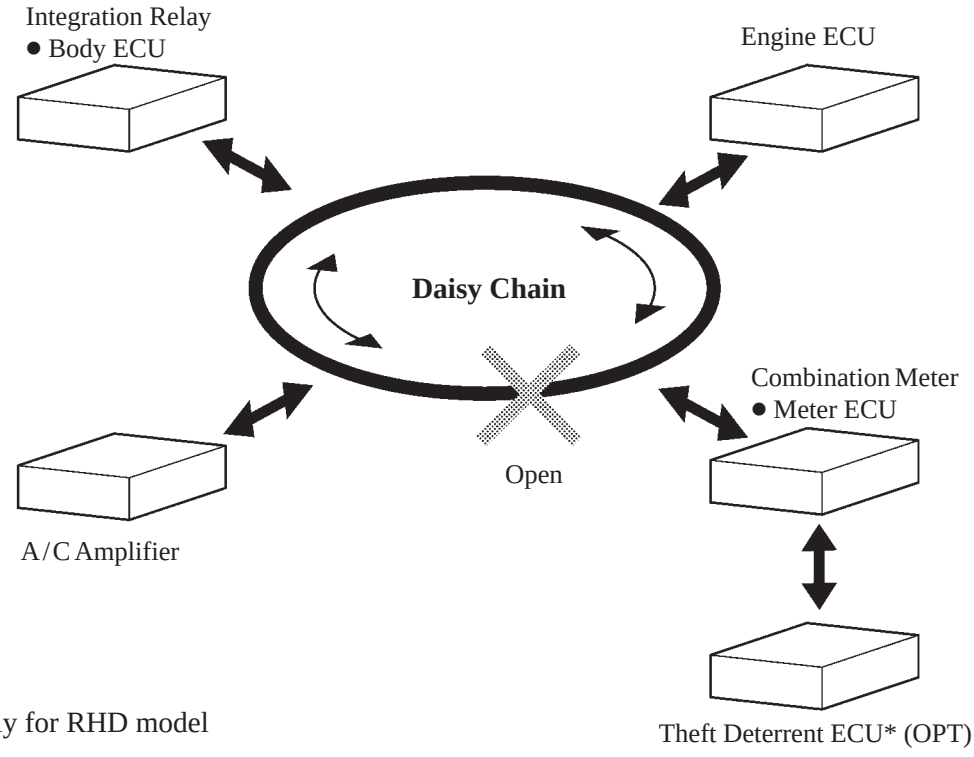

*: Only for RHD model

- The AVC-LAN in the model with multi display uses a star style, which is centered on the multi display.

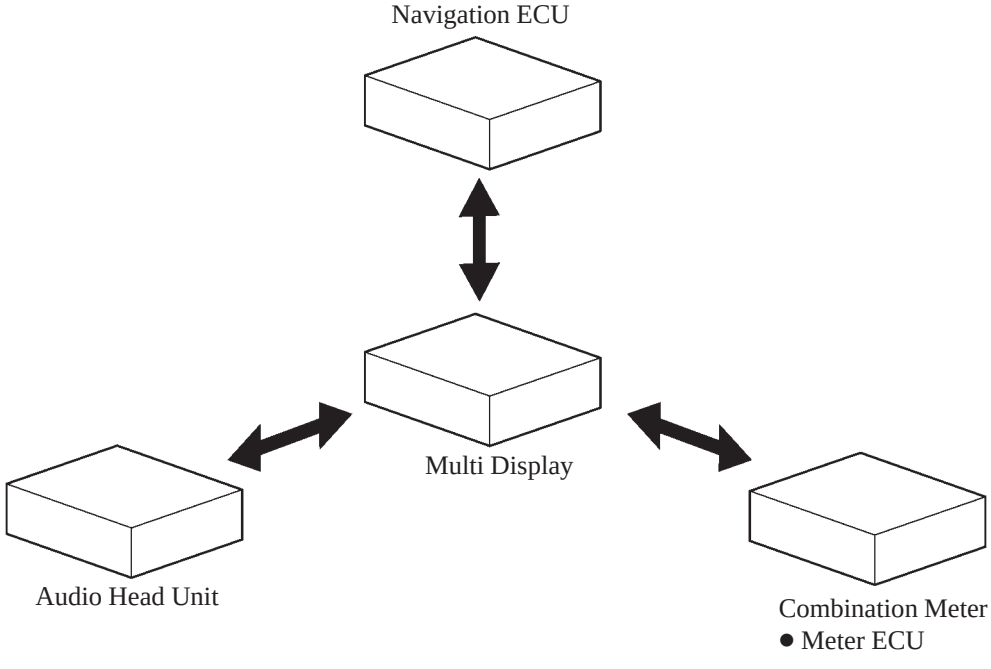

3. Difference of BEAN and AVC-LAN

The protocols, which are the rules for establishing data communication, differ between the BEAN and the AVC-LAN. If ECUs use different types of data such as communication speed, communication wire, and signals, they will be unable to understand each other. Therefore, protocols (rules) must be established among them.

Protocol	BEAN	AVC-LAN
Communication Speed	Max. 10 k bps*	Max. 17.8 k bps*
Communication Wire	AV Single Wire	Twist Pair Wire
Drive Type	Single Wire Voltage Drive	Differential Voltage Drive
Data Length	1 – 11 Byte (Variable)	0 – 32 Byte (Variable)

*: bps: abbreviation for “Bits Per Second”, indicating the number of bits that can be transmitted per second.

— Reference —

There are two types of BEAN communication methods: the one-way type and the two-way type. The new Avensis uses the two-way type, which is currently in the main stream.

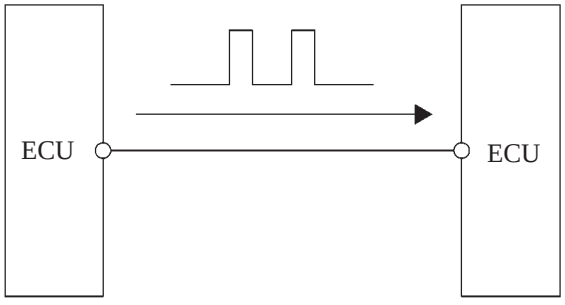

240BE13

One-way Type

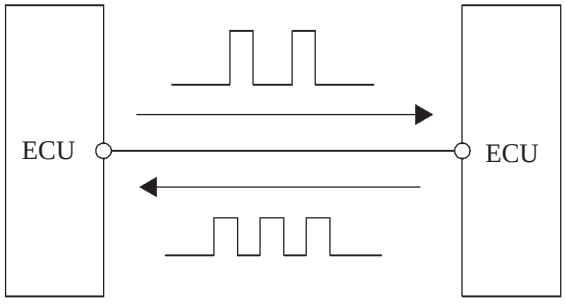

240BE14

Two-way Type

4. Communication Wire

A single, AV (Automobile Vinyl) wire is used for BEAN communication. A twisted-pair wire is used for AVC-LAN communication.

Communication Wire	Outline
AV Single Wire 240BE09	This is a lightweight single communication wire that consists of a single core line surrounded by insulation. Voltage is applied to this line in order to drive communication, and this system is called a “Single Wire Voltage Drive”.
Twisted-pair Wire 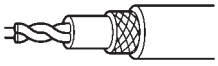 240BE10	In this communication wire, a pair of lines are twisted together and covered with insulation. Communication is driven by applying positive (+) and negative (–) voltage to the two lines in order to send a single signal. This system, which is called a “Differential Voltage Drive”, can reduce noise.

▶ Single Wire Voltage Drive ◀

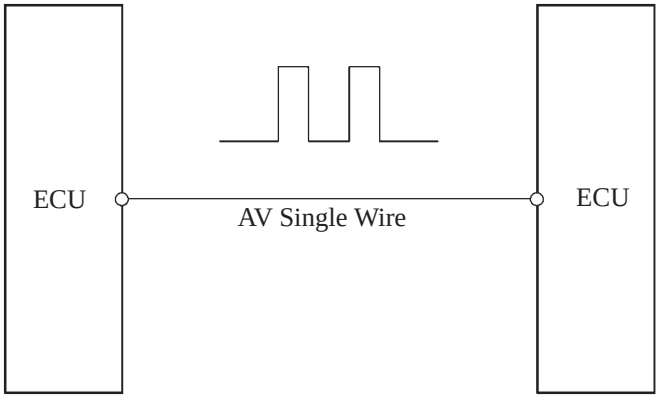

240BE11

▶ Differential Voltage Drive ◀

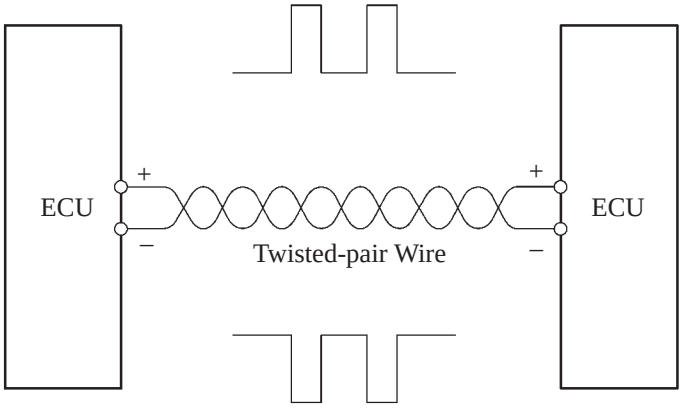

240BE12

BE

■ DIAGNOSIS

- If a malfunction occurs in BEAN communication line, integration relay (Body ECU) outputs DTC (Diagnostic Trouble Codes).
  The DTC can be read by connecting a hand-held tester to DLC3. For details, see the Avensis Repair Manual (Pub. No. RM1018E).
- If a malfunction occurs in AVC-LAN communication line with multi display, multi display stored DTC (Diagnostic Trouble Codes) in its memory.
  The DTC of the AVC-LAN can be read on the diagnosis menu display of the multi display. For details, see the navigation section on page BE-81.
- AVC-LAN communication line with multi-information display has not the diagnosis function.

LIGHTING

■DESCRIPTION

1. General

The new Avensis has a lighting system with the following equipment:

Destination		Europe						General Countries
Engine		1ZZ-FE, 3ZZ-FE		1AZ-FE	1AZ-FSE	1CD-FTV		1AZ-FE
System \ Grade		ENTRY	Others	—	—	ENTRY	Others	—
Headlight Beam Level Control	Manual	STD	STD	STD	STD	STD	STD	—
	Auto	—	SET OPT	SET OPT	SET OPT	—	SET OPT	—
HID Headlight		—				—		—
Daytime Running Light*		OPT	OPT	OPT	OPT	OPT	OPT	—
Illuminated Entry		STD	STD	STD	STD	STD	STD	STD
Light Reminder		STD	STD	STD	STD	STD	STD	STD
Front Fog Light		OPT	STD	OPT	STD	OPT	STD	OPT*
Rear Fog Light		STD	STD	STD	STD	STD	STD	—

*: Only for LHD model

2. Front Exterior Light

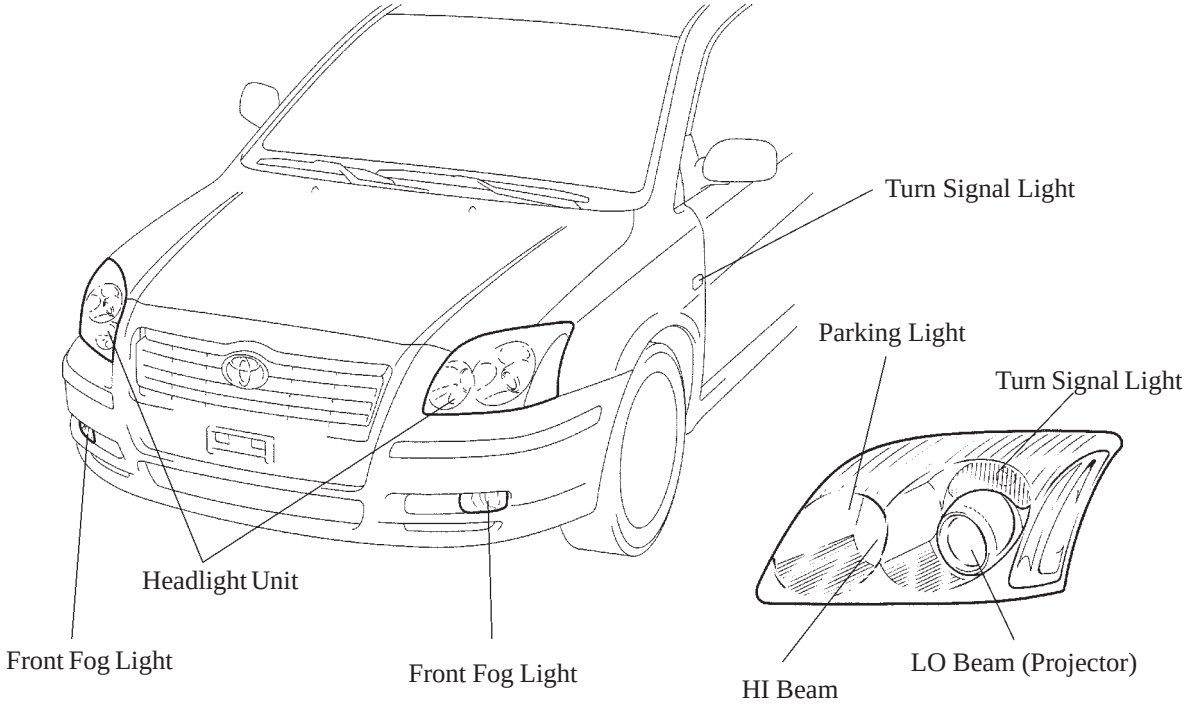

240BE17

BE

3. Rear Exterior Light

Each taillight of the sedan model contains 3 bulbs and a reflector to provide 9 points of beams.

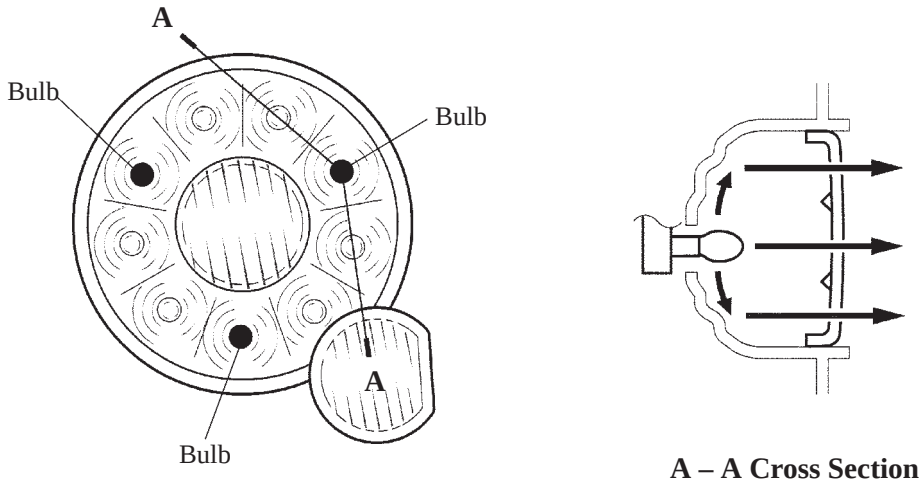

A – A Cross Section

240BE18

▶ Sedan Model ◀

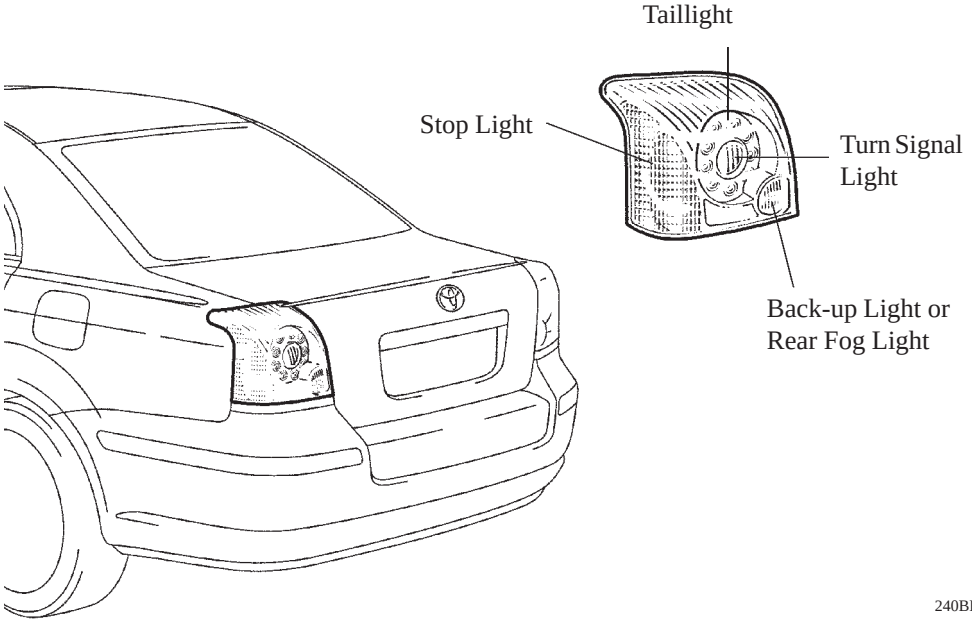

240BE19

▶ Liftback Model ◀

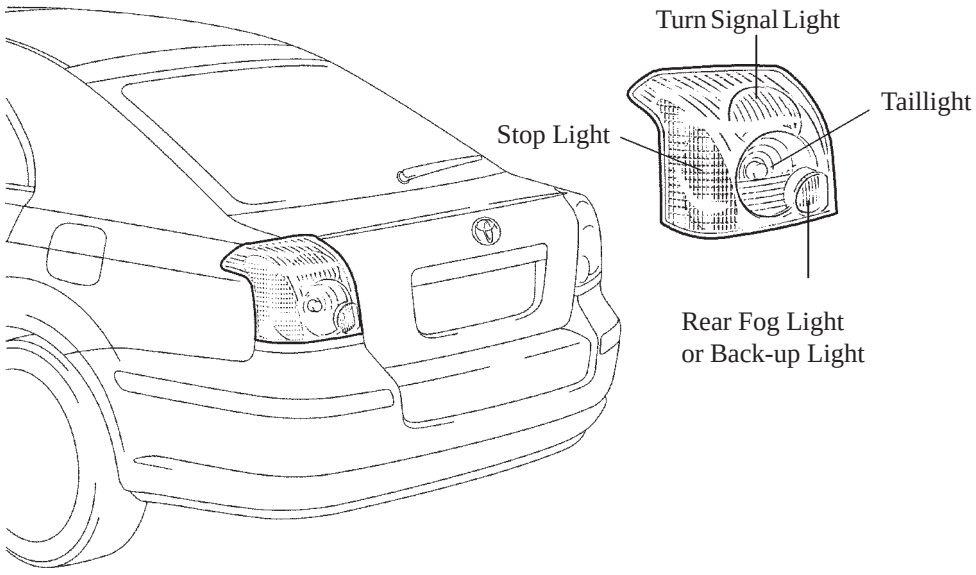

240BE20

▶ Wagon Model ◀

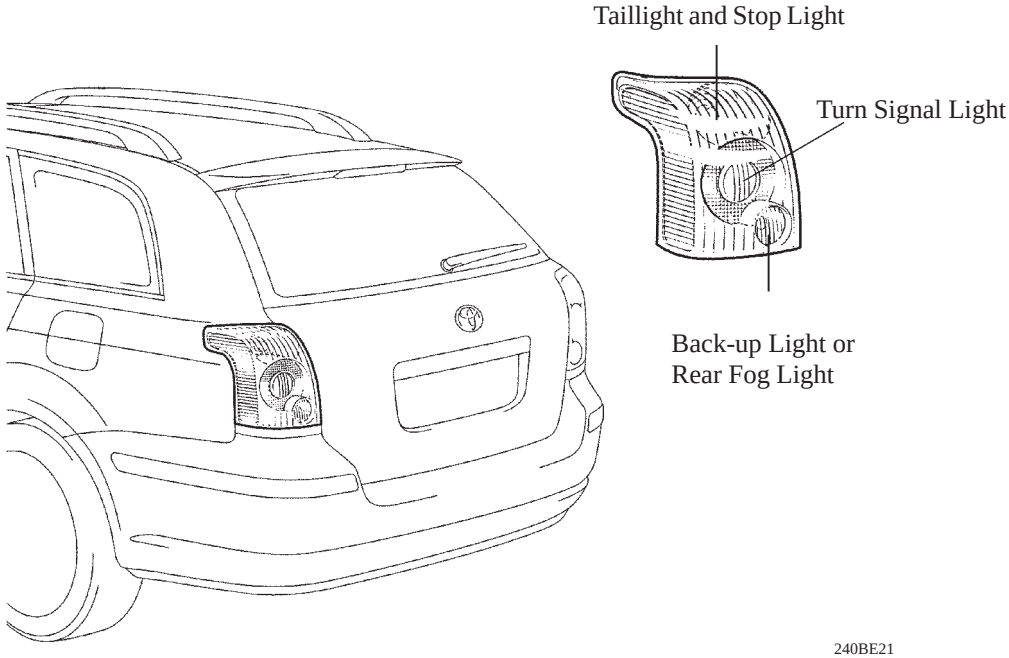

240BE21

■ HEADLIGHT BEAM LEVEL CONTROL

1. Manual Headlight Beam Level Control

General

When the vehicle posture is changed in accordance with the number (weight) of passengers and volume of luggage, this system enable to adjust the LO beam level (5-step) of the headlights manually to the appropriate level controlled by headlight beam level control switch from driver. The beam level of the headlights can be adjusted with the actuators that are integrated in the headlight units.

▶ System Diagram ◀

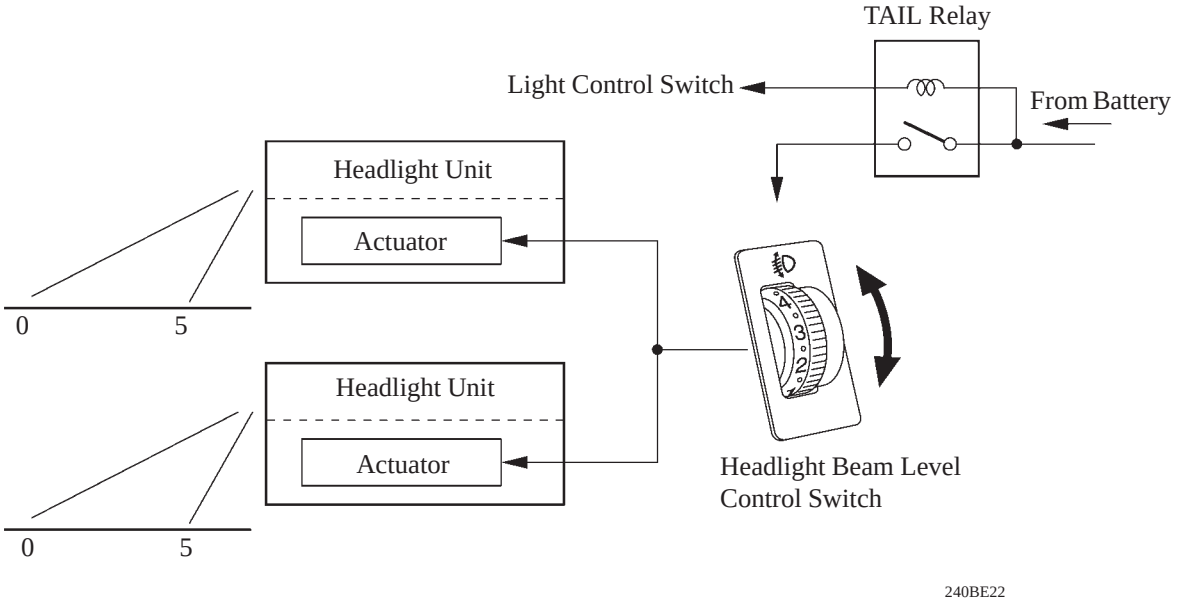

Layout of Main Component

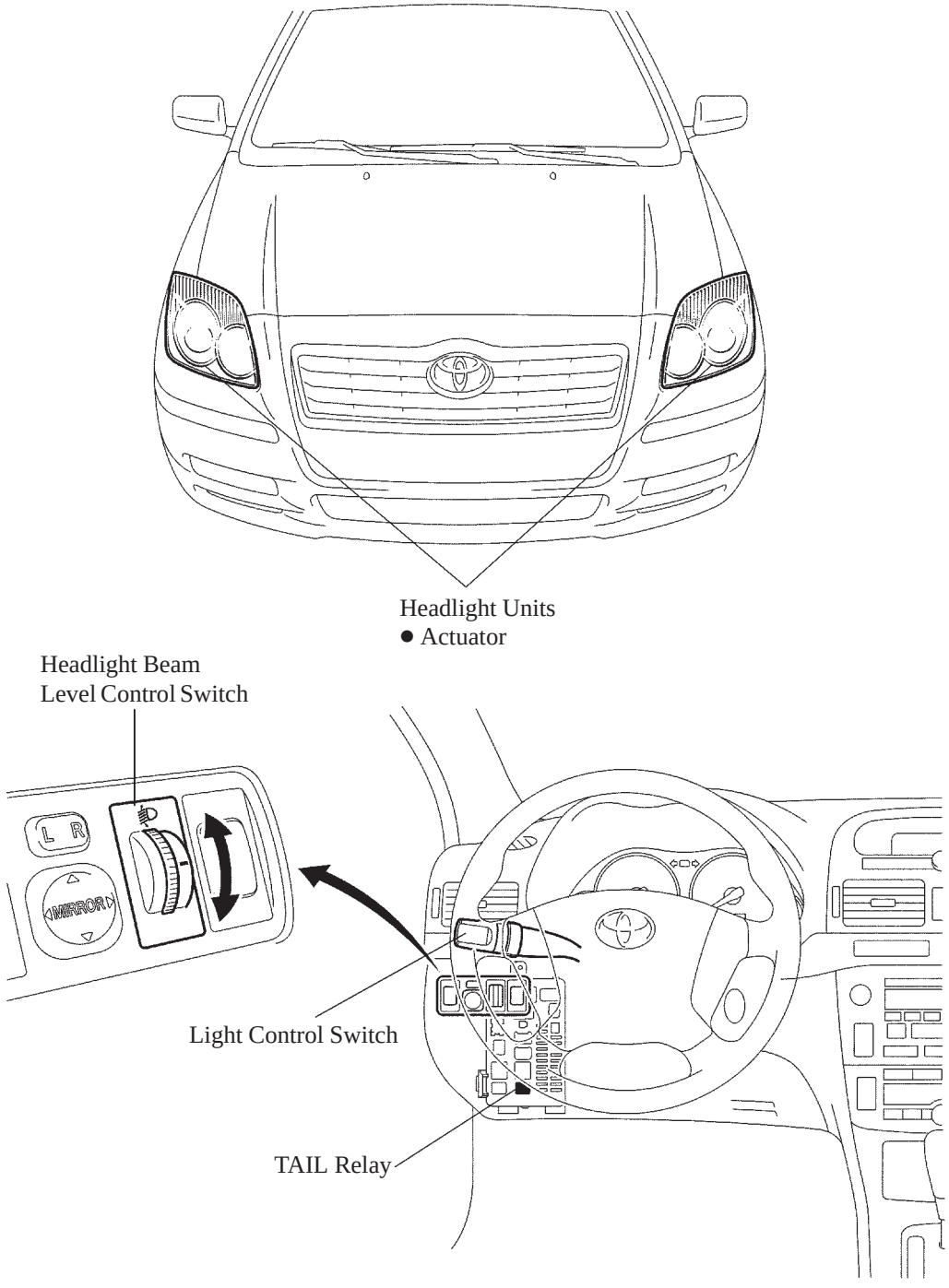

240BE32

2. Automatic Headlight Beam Level Control

General

- This system maintains the headlight LO beams at a constant level while the vehicle is stopping or being driven at a constant speed.
- This system is controlled by the headlight level control ECU. This ECU detects the vehicle posture via the front and rear height control sensors, and detects the vehicle speed via the combination meter. The ECU then controls the headlight leveling actuator based on these pieces of information, in order to change the headlight reflector angle.

▶ System Diagram ◀

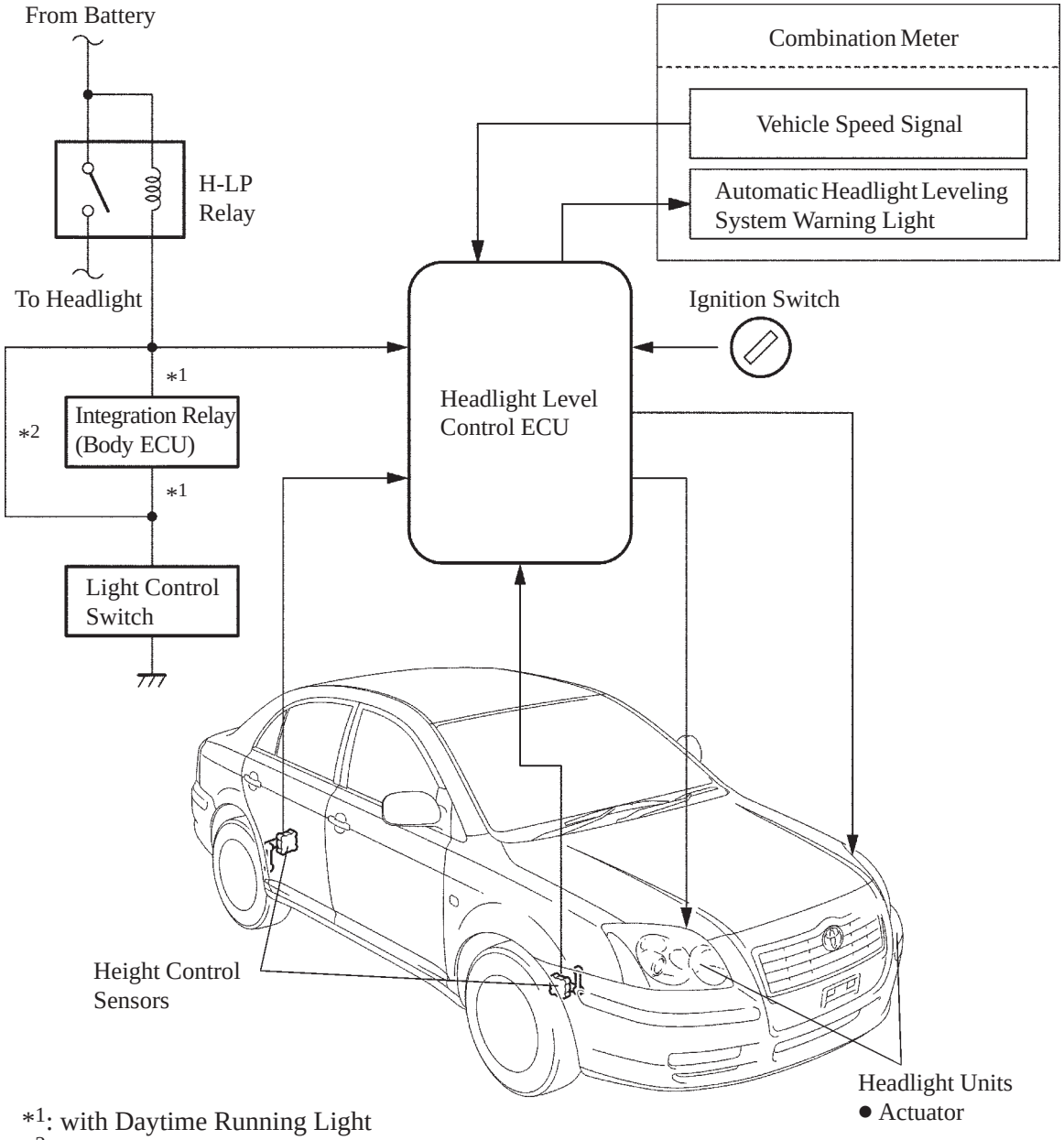

Layout of Main Component

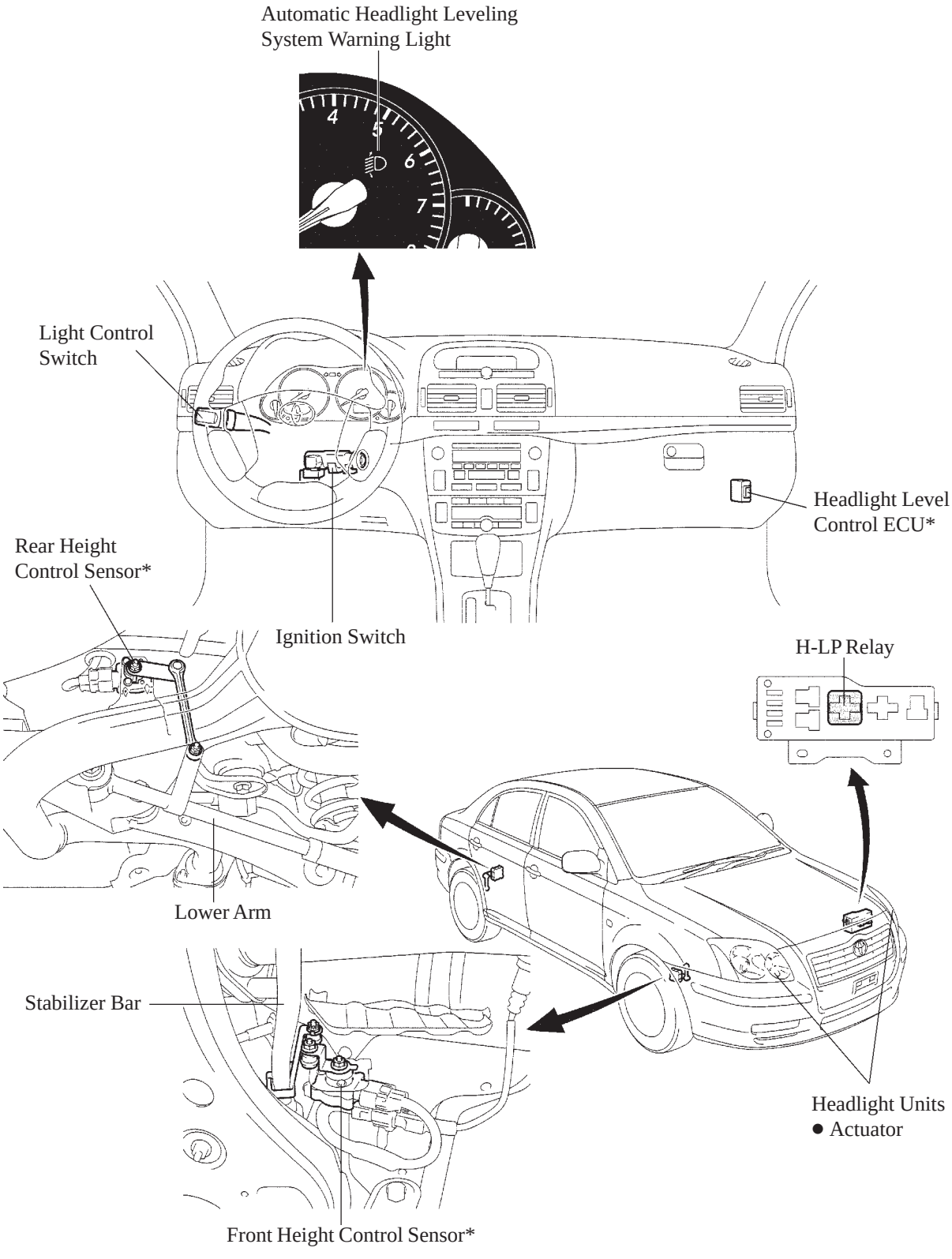

*: These installation positions remain unchanged on the RHD model.

Wiring Diagram

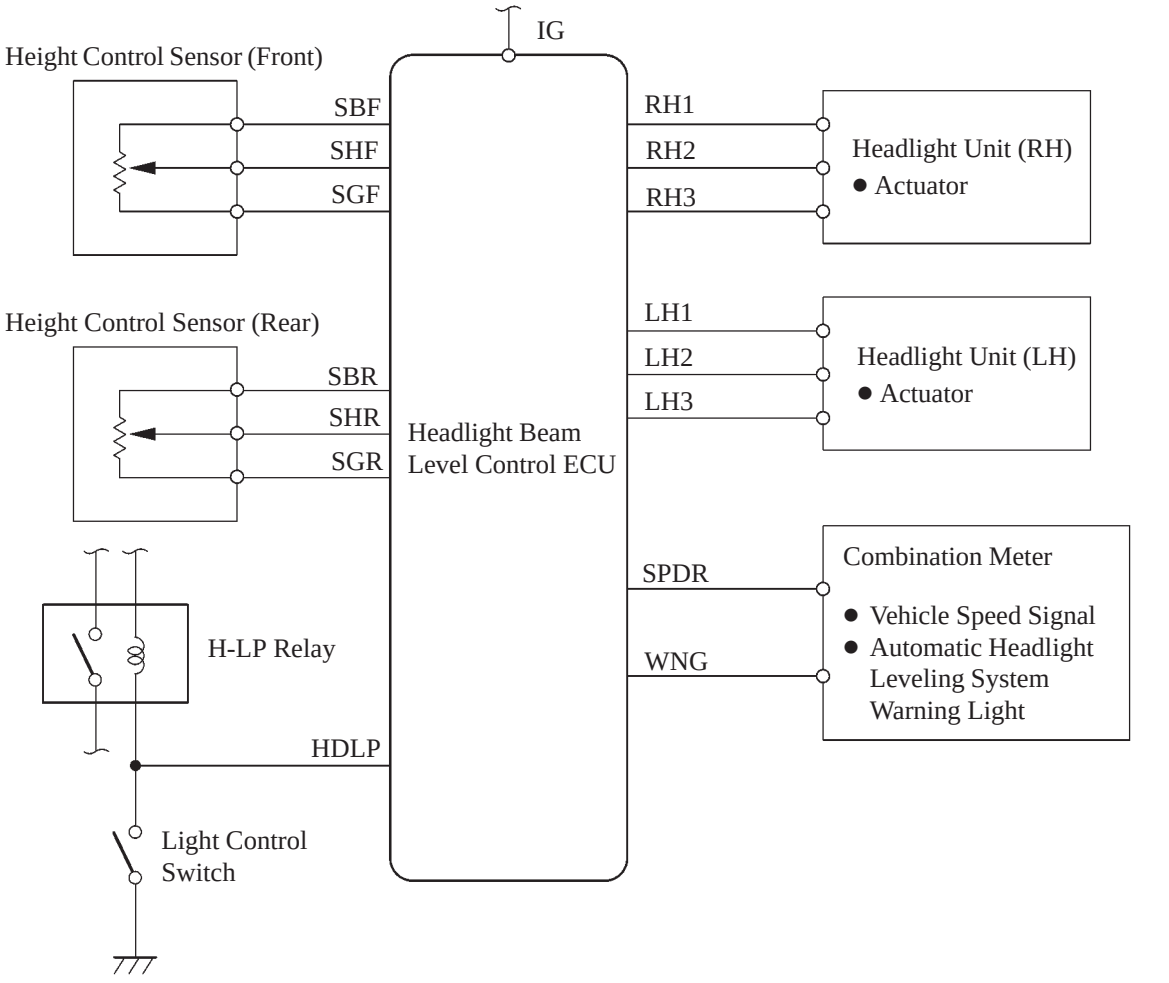

240BE27

Function and Construction of Component

Components		Function and Construction
Front and Rear Height Control Sensors		Detect the amount of vehicle height.
Combination Meter ● Automatic Headlight Leveling System Warning Light		● Outputs the vehicle speed signal to the headlight beam level control ECU. ● Lights up to alert the driver when the headlight beam level control ECU detects the malfunction in this system.
Headlight Units (RH and LH)	Actuator	● Based on the signals received from the headlight beam level control ECU, each actuator moves the reflector in the headlight to vary its LO beam. ● This actuator uses a DC motor and precisely regulates the angle of the reflector. ● The actuator is integrated with the headlight unit. In case of an actuator malfunction, the headlight unit must be replaced.
Headlight Beam Level Control ECU		● Based on the signals that are transmitted by height control sensors and combination meter, this ECU detects the amount of variance of the vehicle posture while the vehice is stopped or being driven ata constant speed (above 30 km/h or below 180 km/h). ● Based on the detected value, this ECU output control signal to the actuator. ● This ECU provides initial set control and fail-safe function.

Initial Set Control

When the ignition switch is turned ON, this function executes the initial set of the headlight beam level control ECU. Then, after sampling the wheel speeds, and the vehicle speed has been determined to be below 0.7 km/h (0.4 mph), the DC motors are set to their initial setting.

Fail-Safe Function

The headlight beam level control ECU operates in the fail-safe mode if an abnormal condition such as those listed below has been detected, and illuminates the automatic headlight leveling system warning light in the combination meter.

Item	Abnormality Detection Condition	Description of Control
Actuator	Open or Short	Holds the beam at the position of the headlight leveling actuator when the abnormality has been detected.
Height Control Sensor	Signal Level Abnormality	Returns the beam to the headlight leveling actuator's initial set position if an abnormality has been detected higher than the initial set position.
		Holds the beam at the position of the headlight leveling actuator when an abnormality has been detected, if the abnormality has been detected lower than the initial set position.
Headlight Beam Level Control ECU	When an abnormal processing of the CPU has been detected.	Holds the beam at position of the headlight leveling actuator when the abnormality has been detected.

■HID HEADLIGHT SYSTEM

1. General

The HID (High Intensity Discharge) headlight system applies high voltage to the electrodes on the LO beam light bulb to discharge arcs, the metal atoms that are enclosed in the bulb to emit light.

- This system consists of metal halide bulbs and a light control ECU. The light control ECU transforms the voltage that is input from the battery to a high voltage of up to max. 20,000 V and applies it to the metal halide bulbs in order to illuminate them.
- A fail-safe function is provided as a countermeasure against the high voltage that is generated in case that a problem occurs in the headlight system.

▶ System Diagram ◀

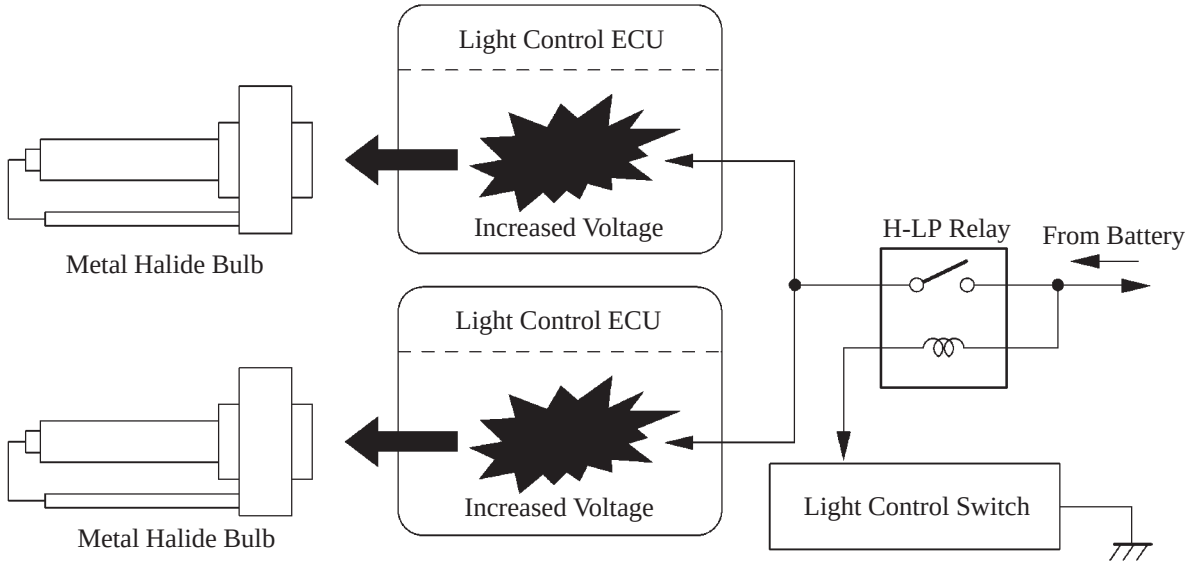

240BE28

2. Layout of Main Component

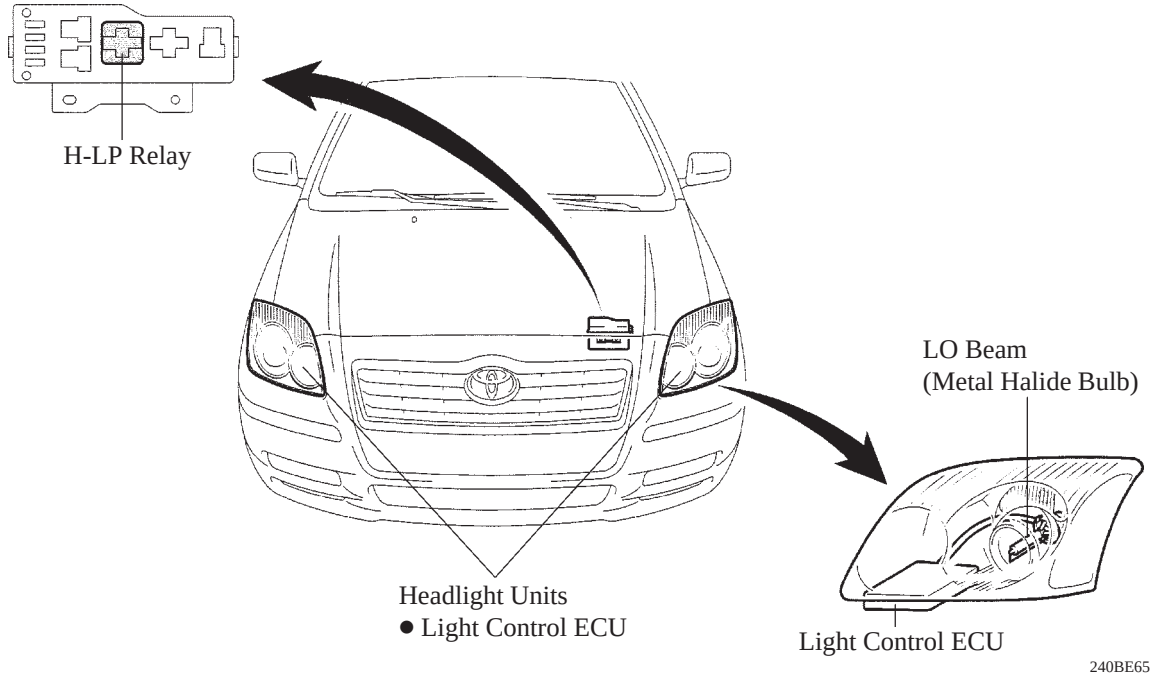

240BE65

3. Metal Halide Bulb

Instead of the filament contained in a halogen bulb, a metal halide bulb contains an arc tube, which is filled with xenon gas, mercury, and metal halide.

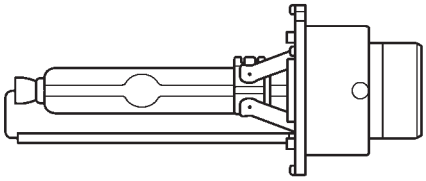

240BE29

4. System Operation

a) The light control ECU applies the generated high voltage to the electrodes of the metal halide bulb.

b) As the temperature in the bulb rises, the mercury evaporates and causes arcs to be discharged.

c) As the temperature in the bulb rises ever further, the metal halide in the mercury arc separates into metal atoms and iodine atoms.

d) The separated metal atoms discharge light, which causes the bulb to emit light.

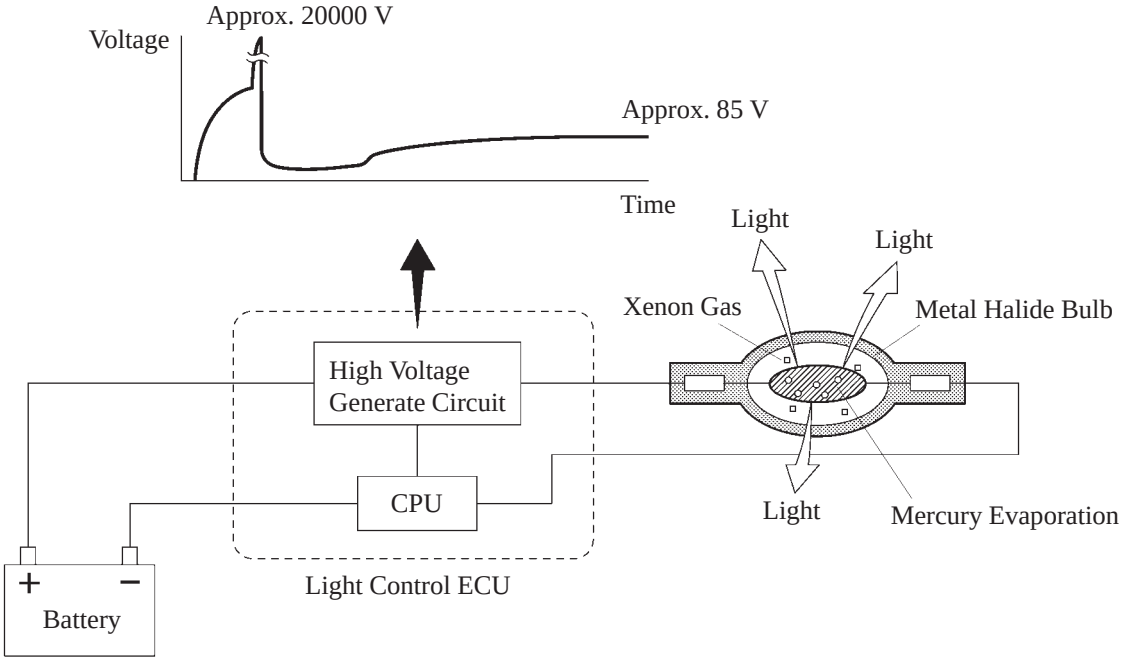

240BE30

BE

5. Fail-Safe Function

The light control ECU executes the fail-safe actions listed below in accordance with the item that has been detected.

Item	Outline
Detection of Abnormal Input Voltage	If the voltage that is input to the light control ECU deviates from the operating voltage (9 – 16 volts), the light control ECU stops illuminating the headlights, and resumes illuminating the headlights once the voltage reverts to the operating voltage range. However, if the input voltage decreases after the headlights have illuminated, the headlights will remain illuminated until the bulbs are extinguished.
Detection of Abnormal Output (Open Circuit or Short Circuit) or Flashing Bulb	If an abnormal condition (open or short) occurs in the voltage that is output by the light control ECU, or if the bulb flashes, the light control ECU stops illuminating the headlights and will maintain this state until the power is reinstated (by turning the headlight control switch from OFF to ON).
Detection of Bulb Open	If a bulb is not inserted in its socket, the light control ECU stops generating high voltage until the bulb is inserted correctly and the power is reinstated (by turning the headlight control switch from OFF to ON or turning the ignition switch from OFF to ON).

6. Precautions for Handling Parts

- When the HID headlights illuminate, a high voltage (approximately 20,000V) is applied momentarily to the bulb sockets, which could lead to a serious accident.
- Never connect the tester to the high voltage socket of HID headlight for measurement, as this leads to a serious accident because of high voltage.
- When performing operation related to the HID headlight, make sure to do it in the place with no water of rain to prevent electric shock, with light control switch OFF, battery terminal removed, connector of light control ECU disconnected.
- When performing operating related to the HID headlight, make sure to do it after assembling has been completely over and never light up without a bulb installed.
- Do not light up the HID headlight using another power source except vehicle’s.
- When there is a defect on the HID headlight or any shock has been applied to it, replace the light with a new one.
- A metal halide bulb reaches a high temperature when it is illuminated. For this reason, the use life of the bulb could be shortened if any oil comes in contact with the glass portion of the bulb. Do not touch the glass portion of a bulb with bare hands.

■DAYTIME RUNNING LIGHT SYSTEM

1. General

This system is designed to automatically activate the LO beam of headlights, parking lights, license plate lights and taillights during the daytime to keep the car highly visible to other vehicles. This system is controlled by the integration relay.
This system is enabled when the conditions given below are met:

- Ignition Switch ON
- Alternator L terminal Signal Input (Engine Running Condition)
- Light Control Switch OFF

▶ System Diagram ◀

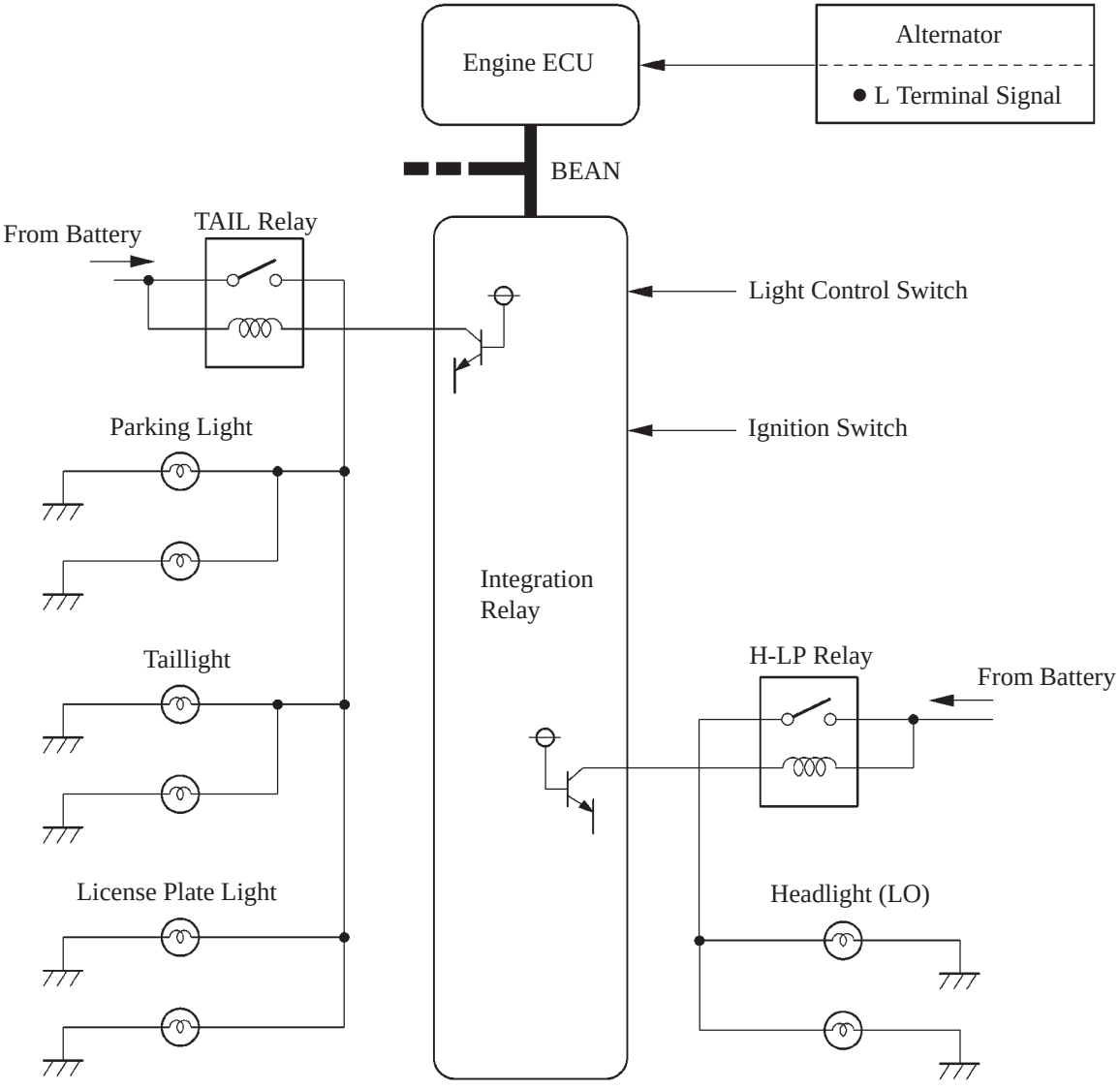

240BE35

BE

2. Layout of Main Component

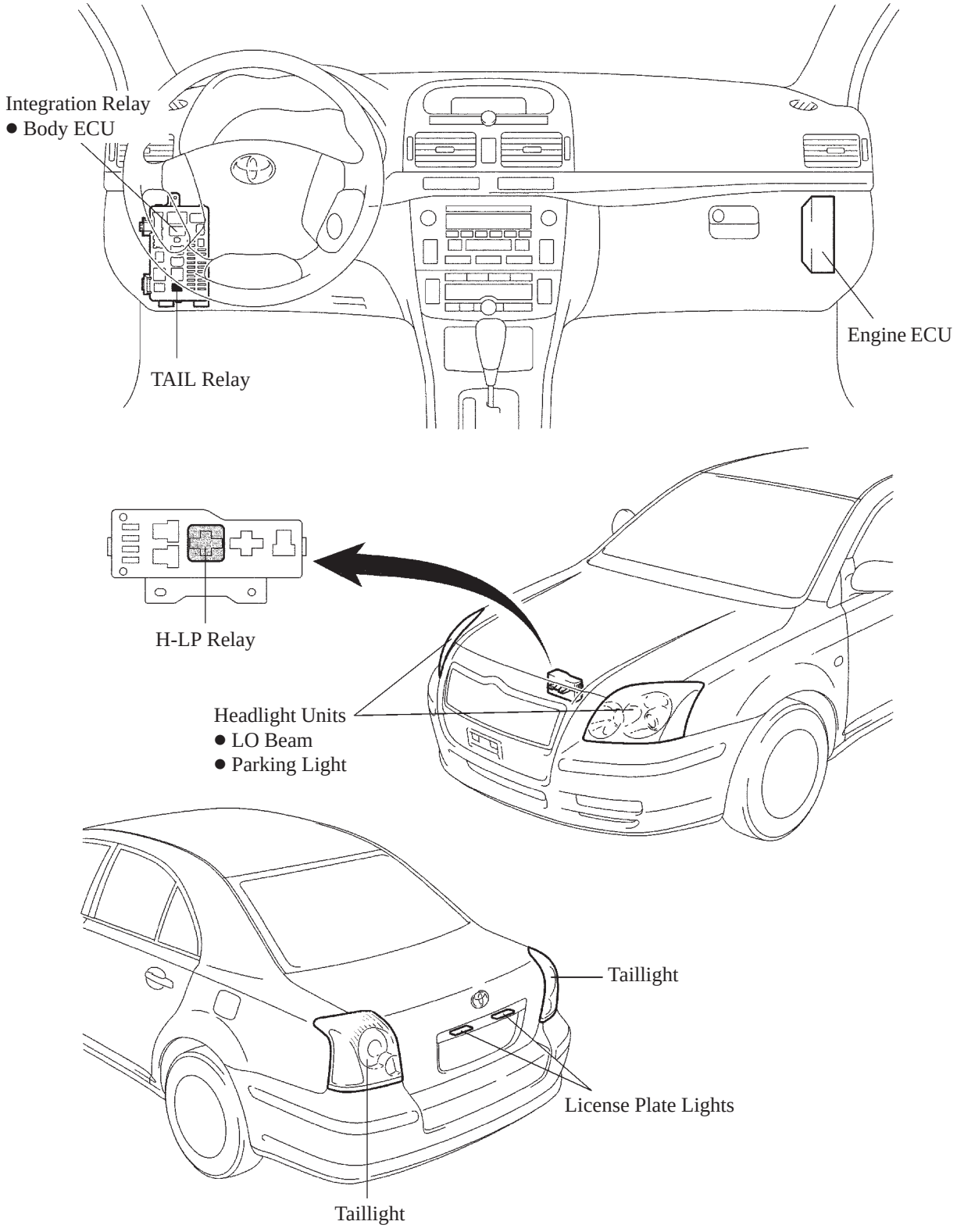

240BE66

■ILLUMINATED ENTRY SYSTEM

1. General

When the any following condition satisfied, the illuminated entry system turns ON front interior light and key illumination.

- A door is unlocked through a driver door key operation or transmitter operation.
- Any door (except luggage door) is opened.
- All door closed and ignitin switch is changed from ON to OFF.

When any following condition satisfied, these lights fade out (approx. 3 sec.)

- After continuiting to be ON for approx. 15 sec. after all doors have been properly closed.
- All doors are closed and driver, front passenger, and rear doors are locked.
- All doors are closed and ignition switch is turned to ACC or ON.

This system is controlled by the integration relay (Body ECU).

▶ System Diagram ◀

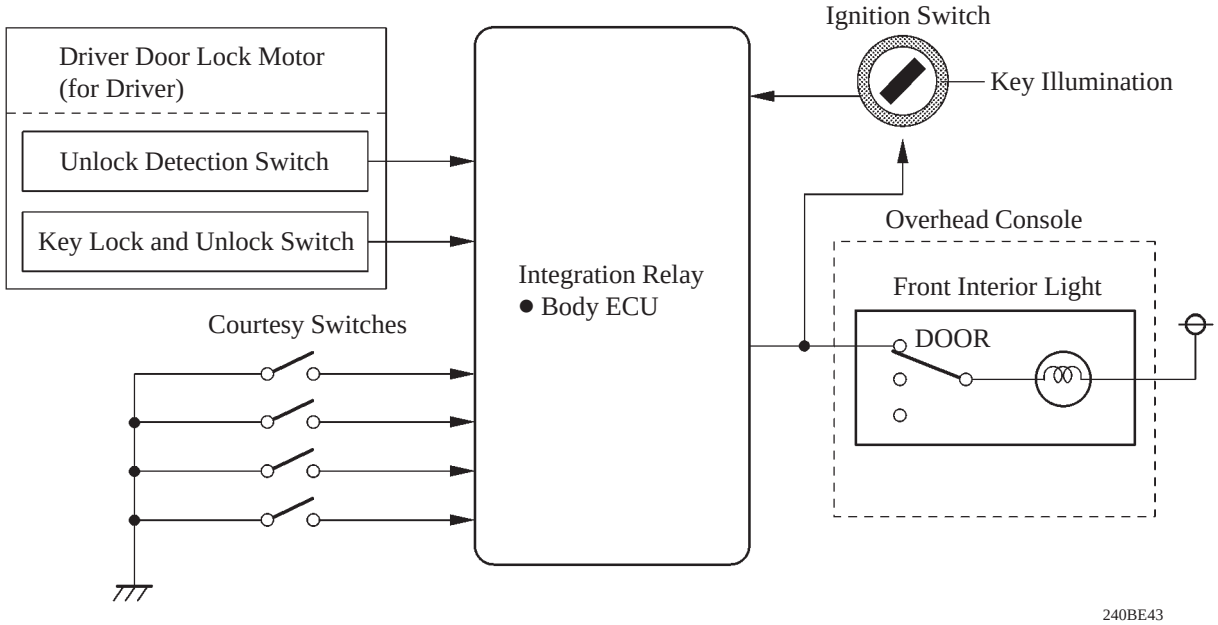

240BE43

2. Layout of Main Component

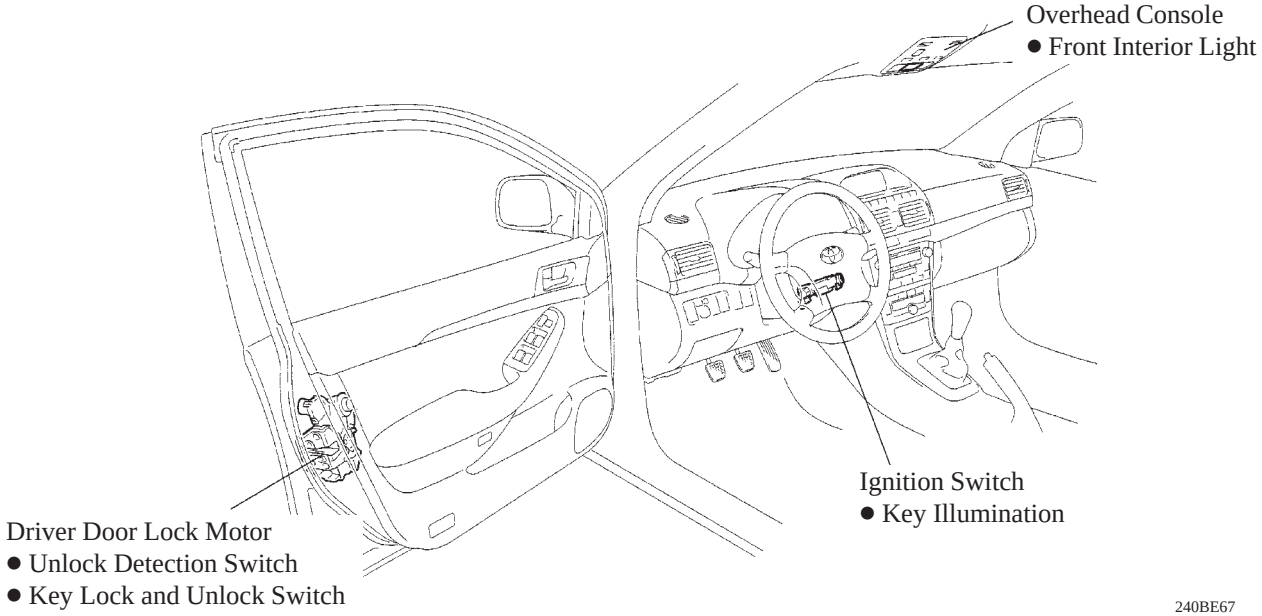

240BE67

BE

■LIGHT REMINDER SYSTEM

1. General

- This system sounds the buzzer in the combination meter to warn the driver that the lights remain ON if the driver's door is opened while the headlights or taillights are ON and the key is not inserted in the key cylinder.
- If the key is inserted in the key cylinder while the headlights or taillights are ON, the activation of the key reminder system takes precedence.

▶ System Diagram ◀

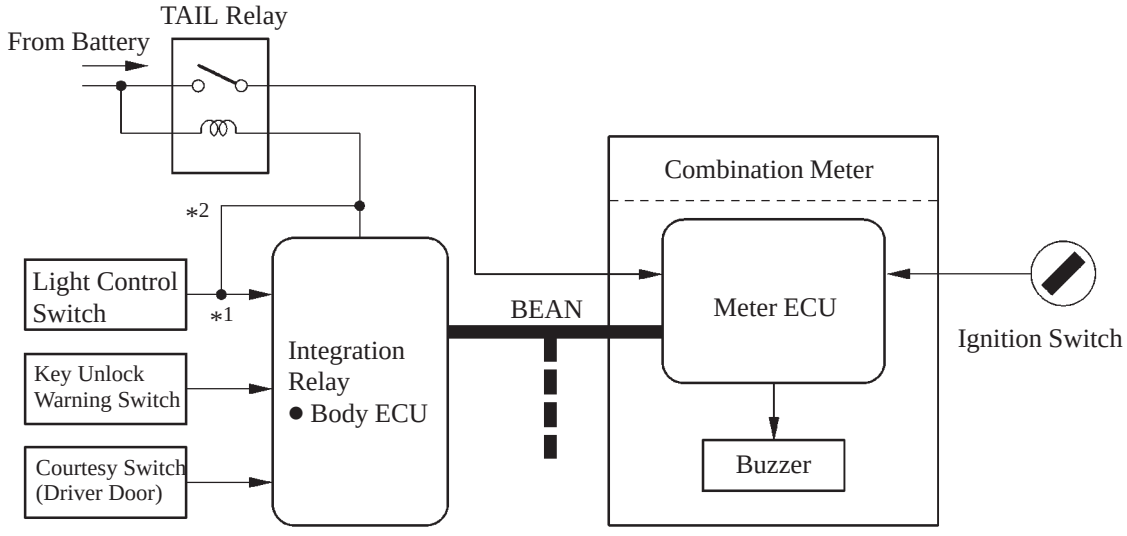

∗1: with Daytime Running Light
∗2: without Daytime Running Light

240BE44

2. Layout of Main Component

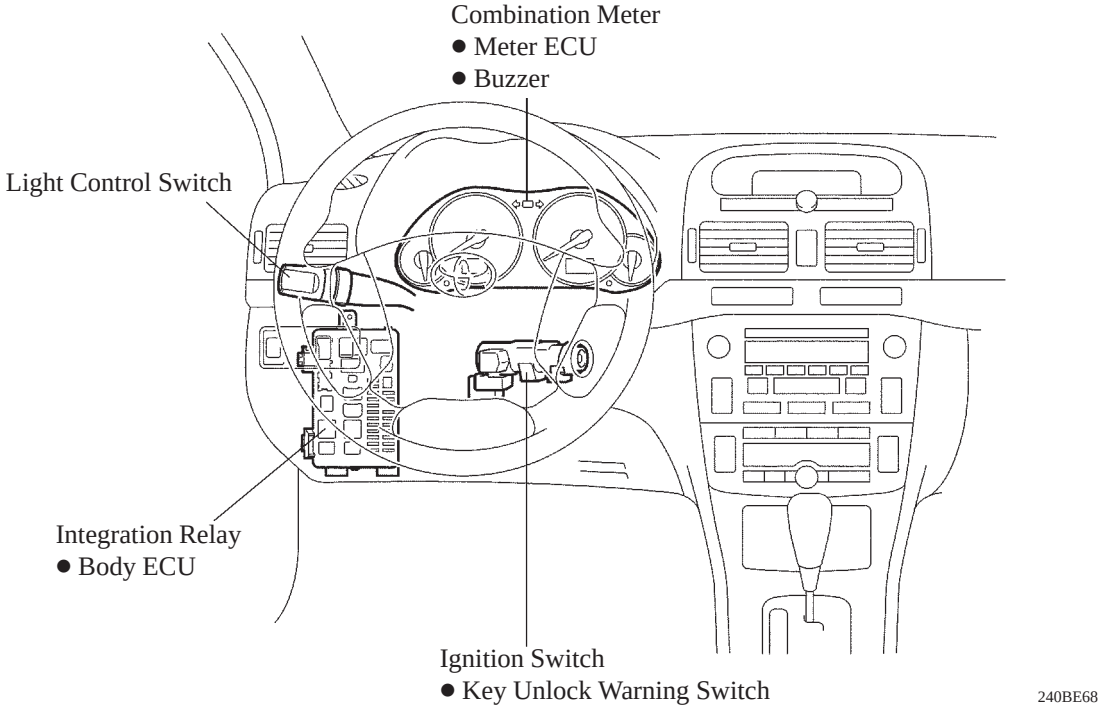

240BE68

METER

■COMBINATION METER

1. General

An optitron display type combination meter is used. This type meter realizes excellent visibility through the use of smoke acylic in the protective panel, and LEDs (Light Emitting Diodes) that vary bright with variable brightness, have high contrast for illuminating the indicator and the dial (see-through illumination). Its face is black when no current is applied. The combination meter in the new Avensis has the following features:

- The combination meter has a built-in meter ECU and buzzer for the reminder system (light, key, and seat belt) and warning system (multi-mode automatic transmission).
- The each LCD (Liquid Crystal Display) is provided in the speedometer and tachometer.
- The odometer, trip meter (two setting), ambient temperature gauge, and illumination level in the speedometer use an LCD.
- The clock and automatic transmission indicator in the tachometer use an LCD.
- All the meters, gauges, indicator lights and warning lights use LEDs (Light Emitting Diodes) to reduce consumption of electrical energy.
- The fuel gauge display is changed from F and E to 1/1 and R, and added to 1/2.
- A fuel lid mark uses to point the side of the vehicle where the fuel lid is located.
- In adoption of the new system (cruise control, seat belt reminder, automatic headlight leveling, taillight indicator and EPS) each indicator, reminder, and warning lights have been provided.
- An active circuit is used in the ABS warning light, brake system warning light, EPS warning light, and SRS warning light circuits.

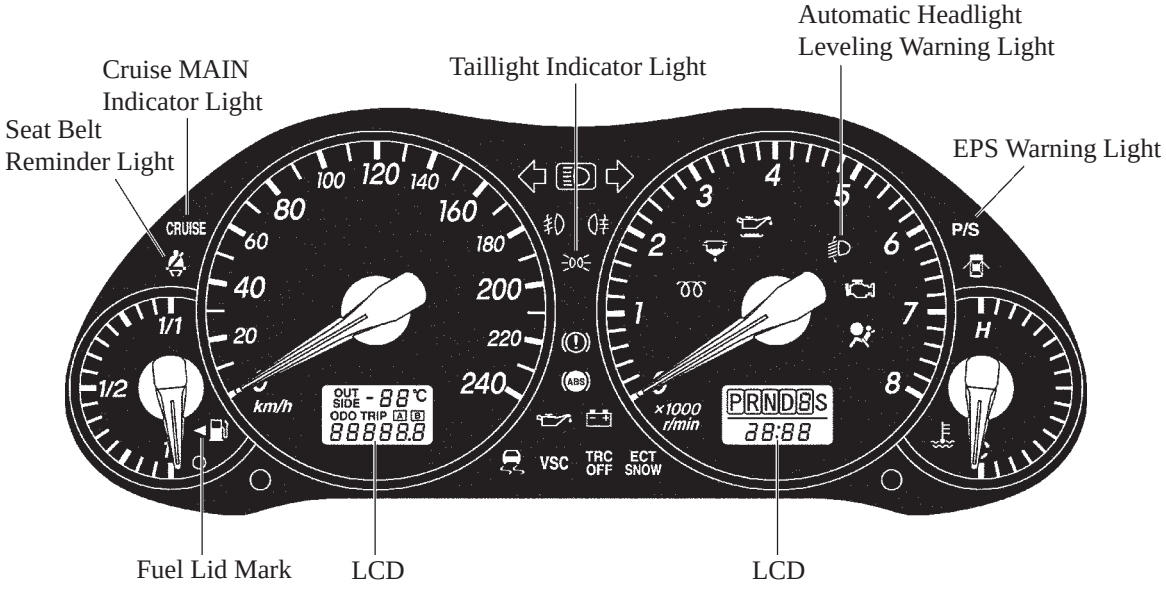

240BE34

Service Tip

If the LEDs malfunction, it must be replaced as a combination meter assembly. Refer to the Avensis Repair Manual (Pub. No. RM1018E).

2. System Diagram

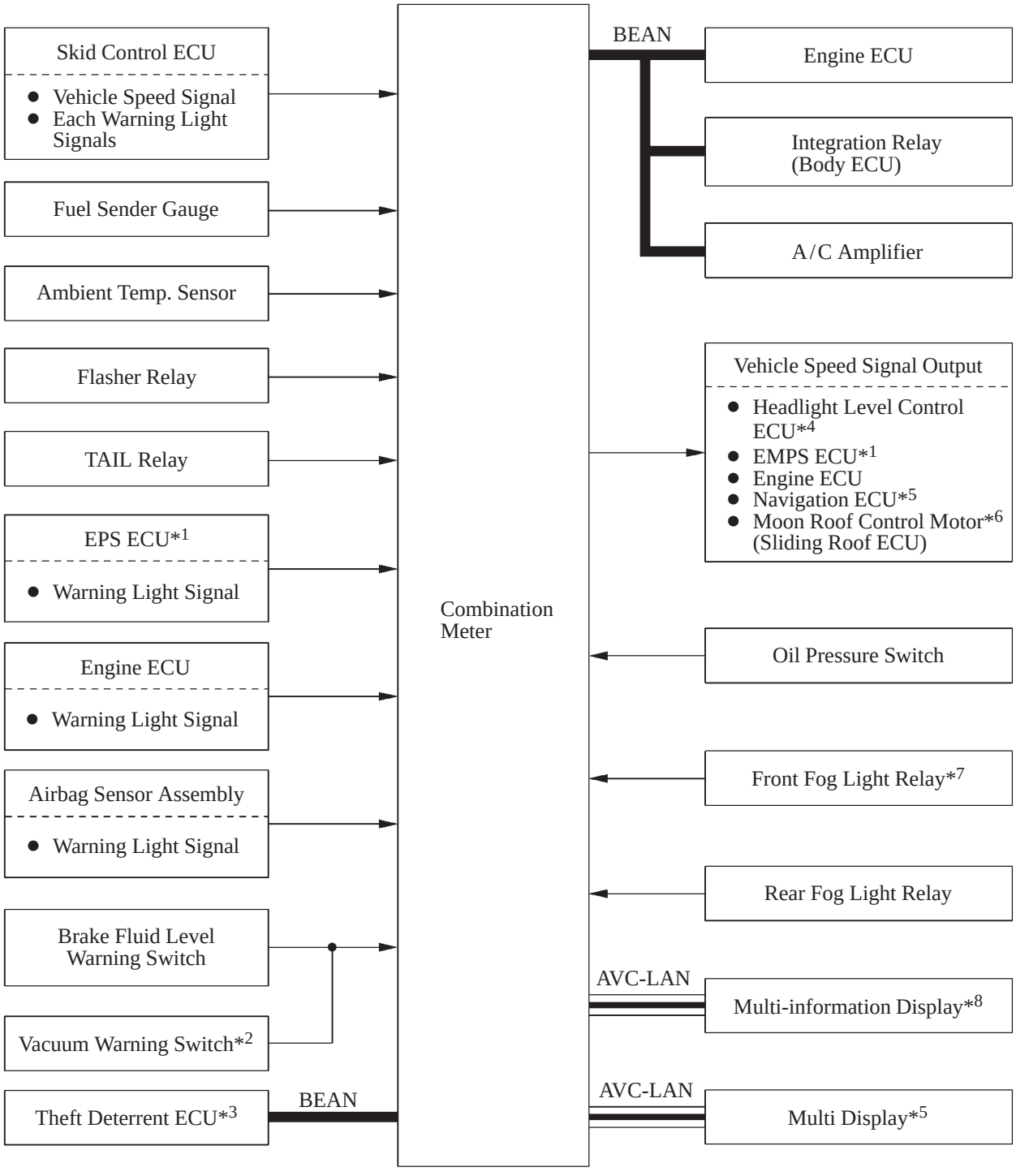

*1: Only for 1ZZ-FE and 3ZZ-FE Engines
*2: Only for 1CD-FTV Engine
*3: with Theft Deterrent System
*4: with Automatic Headlight Beam Level
*5: with Navigation System
*6: with Moon Roof
*7: with Front Fog Light
*8: with Multi-information Display

3. Active Circuit

The active circuits are used in the ABS, Brake System, EPS and SRS warning light circuits in order to illuminate the light when there is an open or short circuit in the wiring harness. Thus, the malfunction detection area has been expanded.

▶ Circuit Diagram ◀

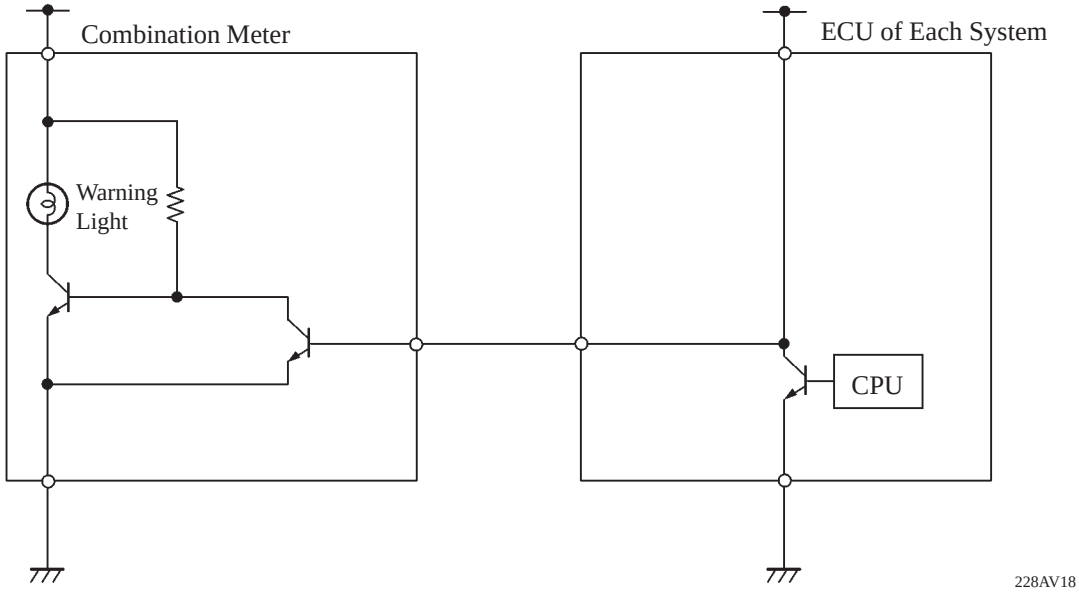

WIPER AND WASHER

■ DESCRIPTION

The front wiper system with raindrop sensing function is provided on the MID TECHNICAL and MID ELEGANT grades for Europe model as standard equipment. The other models are provided on the conventional front wiper system as standard equipment.
The rear wiper system is provided on the Liftback and Wagon Models as standard equipment.

- The raindrop function uses a rain sensor that is mounted on the front windshield glass to detect the amount of raindrops, and a wiper controller that control an optimal wiping timing accordingly.

■ LAYOUT OF MAIN COMPONENT

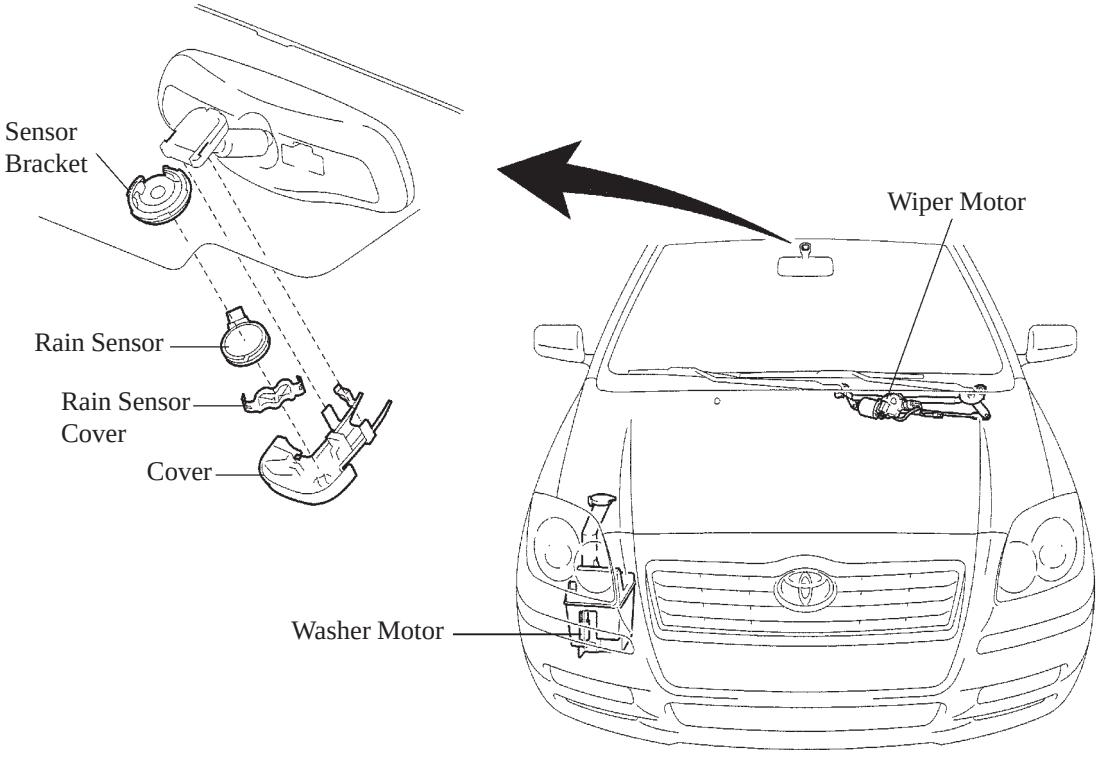

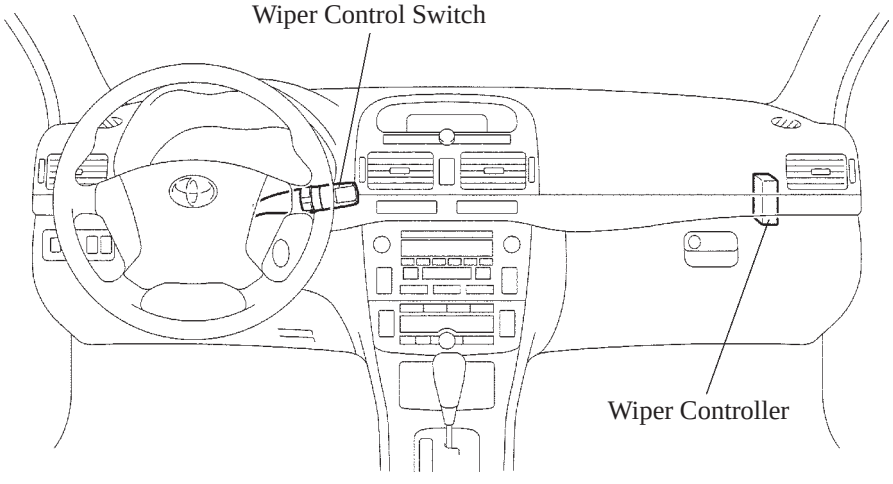

240BE76

■RAINDROP SENSING FUNCTION

1. General

The raindrop sensing function controls the wiping timing in accordance with the amount of raindrops when the wiper control switch is in the AUTO position. This control is effected by the rain sensor based on the amount of raindrops and the input signals from the wiper controller.

▶ System Diagram ◀

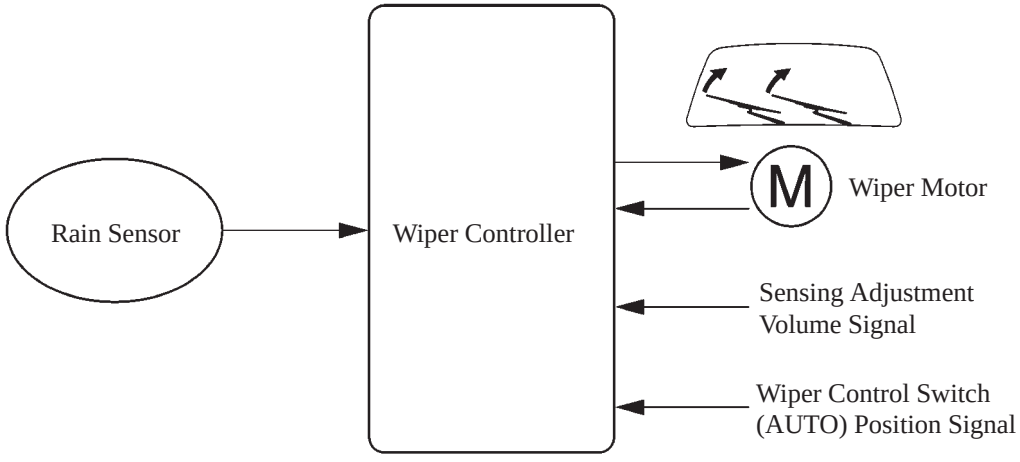

240BE78

2. Function of Component

Item		Function
Rain Sensor		Detects the amount of raindrops and outputs the wiper operation request signal.
Wiper Control Switch	Wiper & Washer Switch	Inputs the switch position into the wiper controller.
	Sensing Adjustment Volume	Adjusts the sensitivity of the rain sensor.
Wiper Controller		Operates the wipers in accordance with the rain sensor signals, the wiper control switch position, and sensing adjustment volume.

3. Rain Sensor

Construction

The rain sensor consists mainly of eight LEDs (Lighting Emitting Diodes) that emits infrared rays and photo diode that receives those rays, and rain sensor tape. Eight LEDs are divided into two groups. Each group has four LEDs.

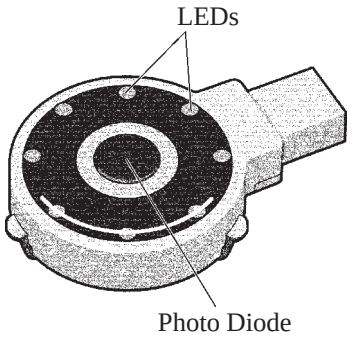

240BE148

Operation

- If no raindrops are present in the detection area, the infrared rays emitted by the LED are all reflected from the windshield glass and are received by the photo diode.
- If raindrops are present in the detection area, a portion of the emitted infrared rays penetrates with the change of index of reflection outward of the windshield glass via the raindrops, thus reducing the amount of infrared rays that are received by the photo diode. The amount of this reduction is then used to detect the amount of raindrops. Thus, this function controls the INT, LO, and HI operations in order to operate the wipers at an optimal wiping timing.

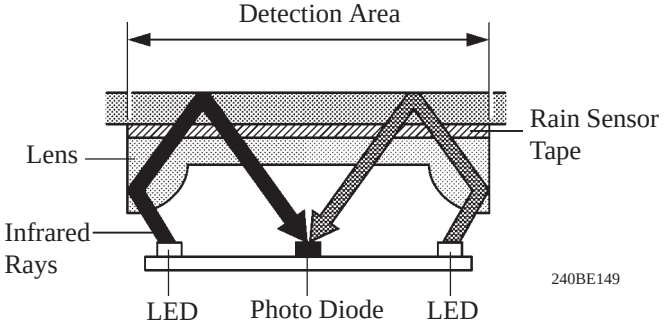

240BE149

If no raindrops are present

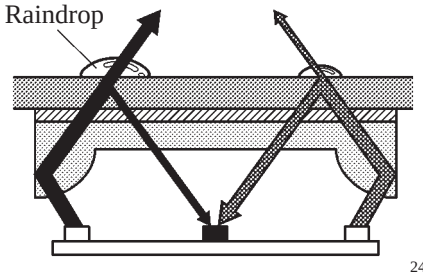

240BE150

If raindrops are present

Service Tip

- The rain sensor bracket is supplied together with the front windshield glass assembly.
- To ensure the proper sealing performance of the windshield glass, the rain sensor is a non-reusable part.
- Before replacing a rain sensor, check its production date. If more than one year has elapsed from the production date, do not use it because its sealing performance may be affected.

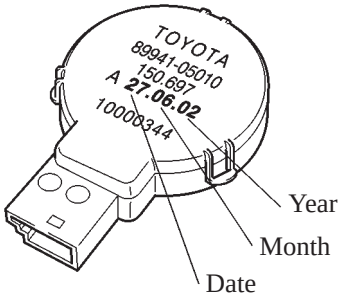

240BE73

AIR CONDITIONER

■ DESCRIPTION

The new Avensis has an air conditioner system with the following equipment.

Destination		Europe					General Counties
Engine		1ZZ-FE, 3ZZ-FE		1AZ-FSE, 1AZ-FE	1CD-FTV		1AZ-FE
Grade		ENTRY	Others	—	ENTRY	Others	—
A/C	without	Δ	—	—	Δ	—	Δ
	Manual	○	—	—	○	—	○
	Auto	—	○	○	—	○	—
Heater	Conventional	○	○	○	○	○	○
	Hot-Gas	—	—	—	○	○	—
	PTC	—	—	—	Δ	—	—
	Combustion	—	—	—	Δ	Δ	—
Clean Air Filter		○	○	○	○	○	—

○: Standard Δ: Option —: Not Available

- An automatic air conditioner system comprising left/right independent temperature control is used. This system is equipped with a self-diagnosis function.
- The hot-gas type power heater has been newly adopted on the new Avensis. This system complements the conventional heater (heater core) when the water temperature is low. This system adds an orifice, a magnetic valve, and a hot gas tank to the conventional air conditioner. The magnetic valve switches the refrigerant cycle and the evaporator dissipates the heat of the refrigerant that has attained a high temperature and a high pressure in the compressor, in order to ensure the proper heater performance.
- The PTC heater system uses a PTC (Positive Temperature Coefficient) element to warm the air that passes through the heater core to ensure the proper heater performance.
- The combustion type power heater system burns fuel and uses the resultant heat to warm the engine coolant to ensure the proper heater performance. For details, see the BE-72.

▶ Performance ◀

Model			New	Previous
Heater	Heater Output	W (Kcal/h)	5200 (4470) more than	4880 (4200)
	Air Flow Volume	m^3/h	320 more than	320
Air Conditioner	Cooling Capacity	W (Kcal/h)	5200 (4470) more than	4660 (4010)
	Air Flow Volume	m^3/h	450 more than	430
	Power Consumption	W	220 less than	220

▶ Specification ◀

Engine				1ZZ, 3ZZ and 1AZ	
Model				New	Previous
Ventilation and Heater Core	Heater Core	Type		Straight Flow (Full-path Flow)	U-turn Flow
		Size W x H x L	mm (in.)	150 x 212 x 21 (5.9 x 8.3 x 0.8)	181 x 180 x 27 (7.1 x 7.1 x 1.1)
		Fin Pitch	mm (in.)	1.8 (0.07)	2.25 (0.09)
	Blower	Motor Type		S70F-14T	S70-13T
		Fan Type		Shroud	Sirocco
		Fan Size Dia. x H	mm (in.)	150 x 75 (5.9 x 3.0)	←
Air Conditioner	Condenser	Type		Multi-flow IV	Multi-flow III
		Size W x H x L	mm (in.)	620 x 364 x 16 (24.4 x 14.3 x 0.6)	570 x 321 x 16 (22.4 x 12.6 x 0.6)
		Fin Pitch	mm (in.)	2.75 (0.11)	3.2 (0.13)
	Evaporator	Type		Revolutionary Slim	Drawn Cup
		Size W x H x L	mm (in.)	205 x 253 x 38 (8.1 x 10.0 x 1.5)	212 x 260 x 90 (8.3 x 10.2 x 3.5)
		Fin Pitch	mm (in.)	2.8 (0.11)	4.5 (0.18)
	Compressor	Type		5SE12	10S15
		Pulley		Plastic DL (without M/C*)	Steel (with M/C*)
	Refrigerant	Type		R134a	R134a
		Charge Volume	g	440 ± 30	460 ± 20

*M/C: Magnetic Clutch

Engine			1CD	
Model			New	Previous
Ventilation and Heater Core	Heater Core	Type	Straight Flow (Full-path Flow)	U-turn Flow
		Size W x H x L mm (in.)	150 x 212 x 21 (5.9 x 8.3 x 0.8)	181 x 180 x 27 (7.1 x 7.1 x 1.1)
		Fin Pitch mm (in.)	1.8 (0.07)	2.25 (0.09)
	Blower	Motor Type	S70F-14T	S70-13T
		Fan Type	Shroud	Sirocco
		Fan Size Dia. x H mm (in.)	150 x 75 (5.9 x 3.0)	←
Air Conditioner	Condenser	Type	Multi-flow IV	Multi-flow III
		Size W x H x L mm (in.)	620 x 364 x 16 (24.4 x 14.3 x 0.6)	570 x 321 x 16 (22.4 x 12.6 x 0.6)
		Fin Pitch mm (in.)	2.75 (0.11)	3.2 (0.13)
	Evaporator	Type	Revolutionary Slim	Drawn Cup
		Size W x H x L mm (in.)	205 x 253 x 38 (8.1 x 10.0 x 1.5)	212 x 260 x 90 (8.3 x 10.2 x 3.5)
		Fin Pitch mm (in.)	2.8 (0.11)	4.5 (0.18)
	Compressor	Type	5SE12	10S15
		Pulley	Plastic DL (without M/C*)	Steel (with M/C*)
	Refrigerant	Type	R134a	R134a
		Charge Volume g	440 ± 30	460 ± 20

*M/C: Magnetic Clutch

■ MAJOR DIFFERENCE (from Previous Model)

Item	Outline
Heater Control Panel	The electronic type heater control panel has been adopted on all models. ● The rotary switch and push switch type heater control panel is used on manual A/C. ● The rotary switch and push switch type heater control panel with LCD is used on automatic A/C. ● The number of blower adjustment step has been increased on automatic A/C. (4 steps → 10 steps)
A/C and Blower Units	A semi-center location A/C unit has been adopted. ● The only differences between the automatic and manual A/C units are the number of air mix dampers (auto: 2, manual: 1) and whether or not they are partitioned between the right and left sides. The clean air filter has been provided on blower unit in Europe model.
Evaporator	An RS (Revolutionary Slim) evaporator has been adopted.
Heater Core	A straight flow (full-path flow) aluminum heater core has been adopted. ● 2 PTC heaters have been provided on the heater core in the model with PTC heater.
Condenser	The condenser structure has been changed. ● The condenser on the hot-gas heater model has been added on the orifice, magnetic valve. Also, the construction of the receiver has been changed.
Compressor	● A continuously variable capacity type (5SE12) compressor has been adopted. ● A/C compressor pulley has been adopted on the plastic DL (Damper Limiter) type, and discontinued on the magnetic clutch.
Air Conditioner Tube	The sight glass for checking the condition of the refrigerant has been discontinued in the expect RHD models on the 1AZ-FE and 1AZ-FSE engines. These models cannot inspect refrigerant volume.
A/C Control	● A/C pressure switch is changed to the A/C pressure sensor. ● The left/right independent temperature control is used. (only for Auto A/C) ● The compressor control has been changed. ● PTC heater control has been adopted. (with PTC heater*)
Hot-Gas Type Power Heater*	Hot-Gas type heater has been adopted newly.
PTC Heater*	PTC heater has been adopted.
Combustion Type Power Heater*	The combustion type heater assembly has been changed.

*: Only for 1CD-FTV Engine Model

■REFRIGERATION CYCLE

1. General

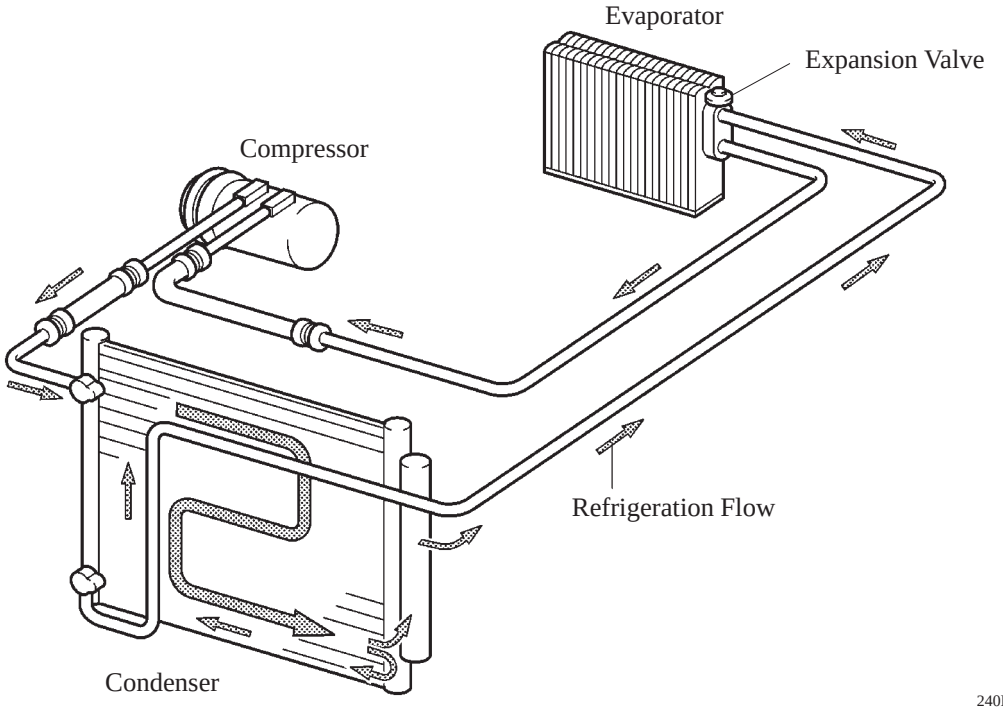

Air Conditioner without Hot-Gas Power Heater

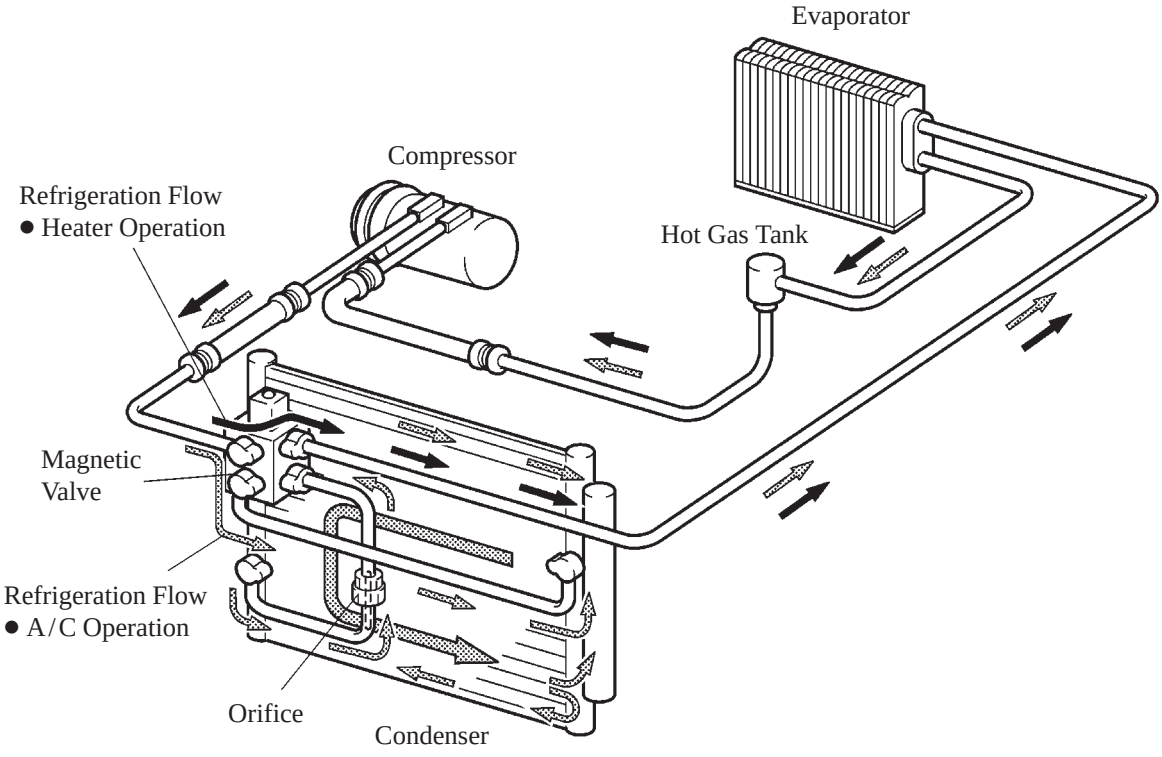

Air Conditioner with Hot-Gas Power Heater

240BE38

2. Outline of Refrigeration Cycle with Hot-Gas Power Heater

▶ Hot-Gas Power Heater Operation ◀

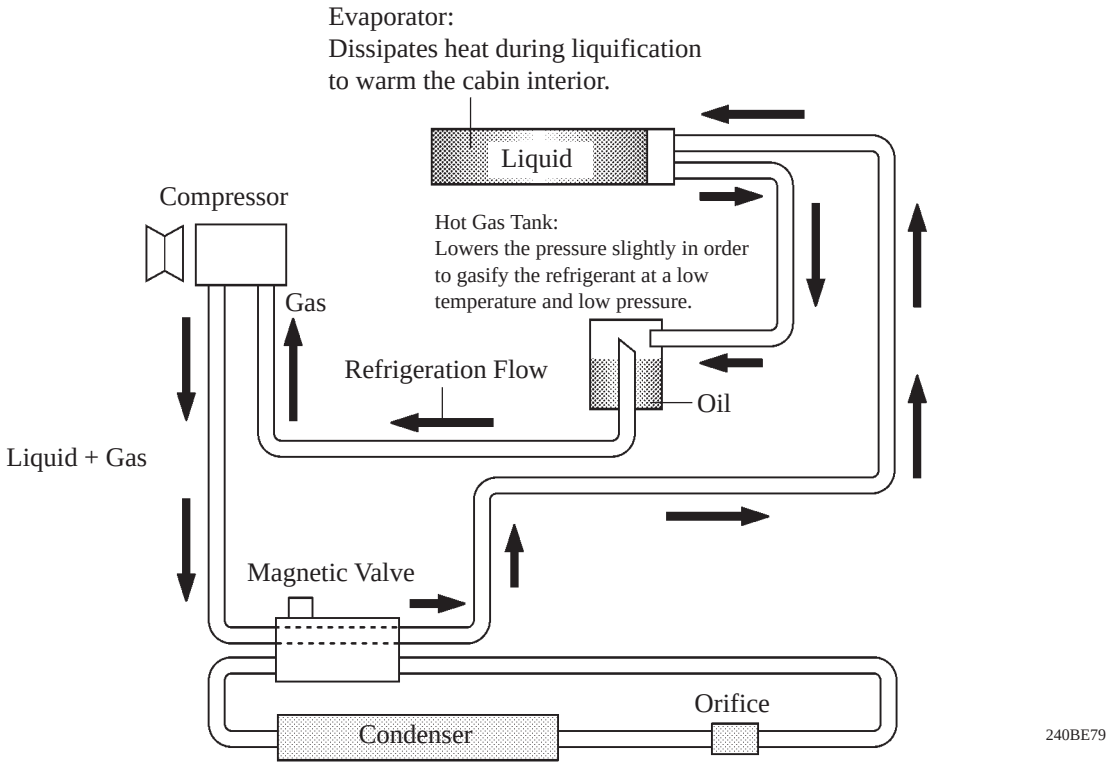

▶ A/C Operation ◀

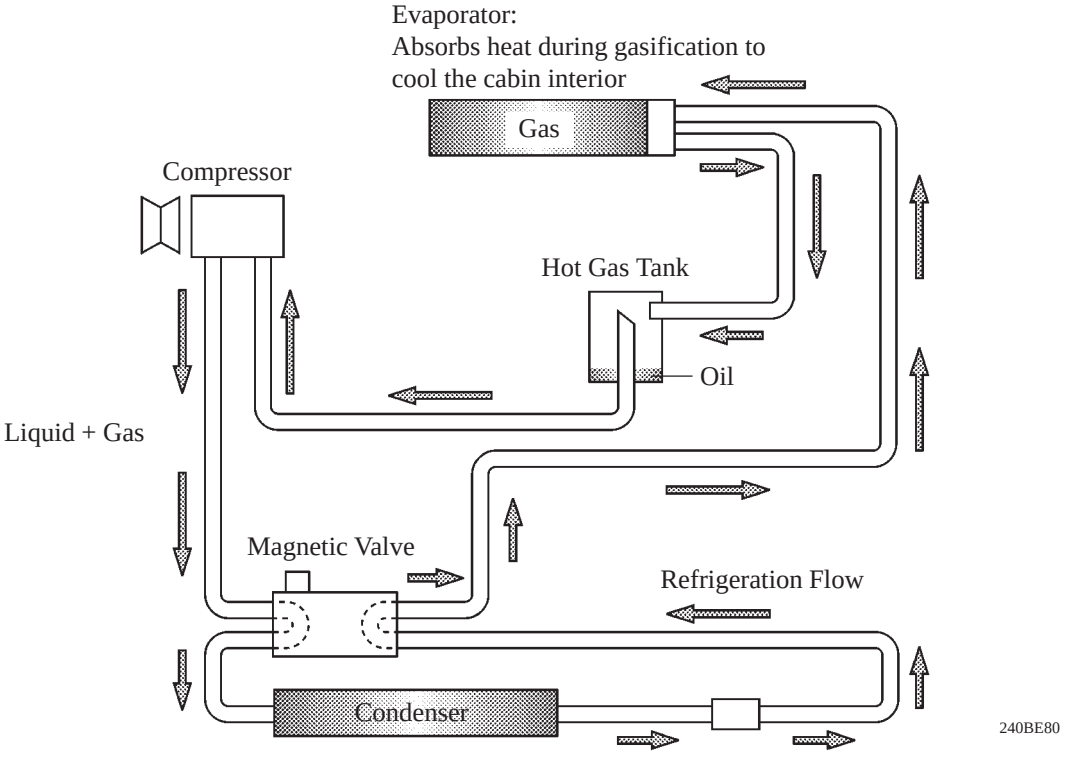

Orifice:
Expands the refrigerant, lowers its pressure, and partially gasifies it.

■SYSTEM DIAGRAM

▶ Manual Air Conditioner ◀

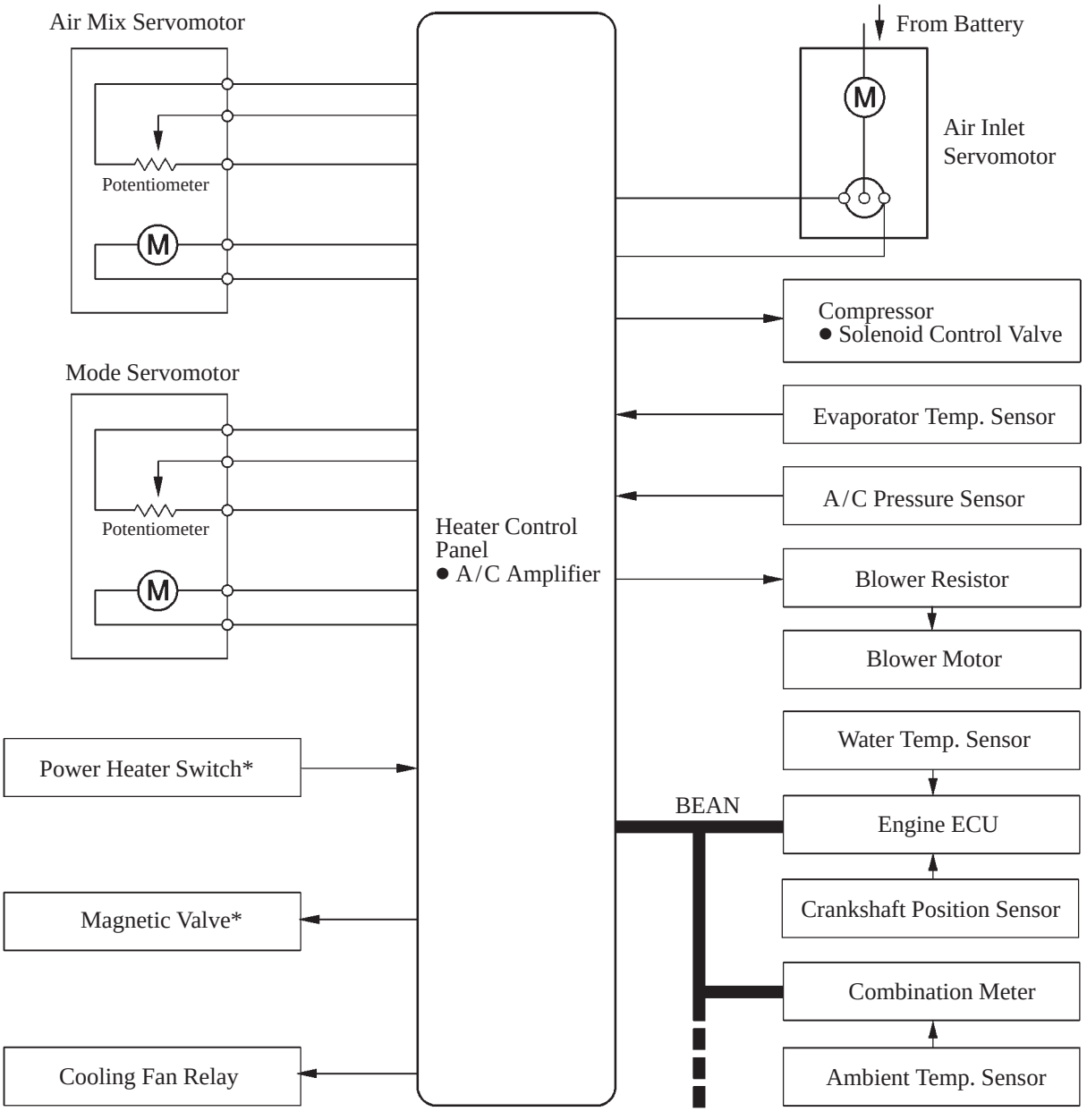

*: with Power Heater

240BE39

BE

▶ Automatic Air Conditioner ◀

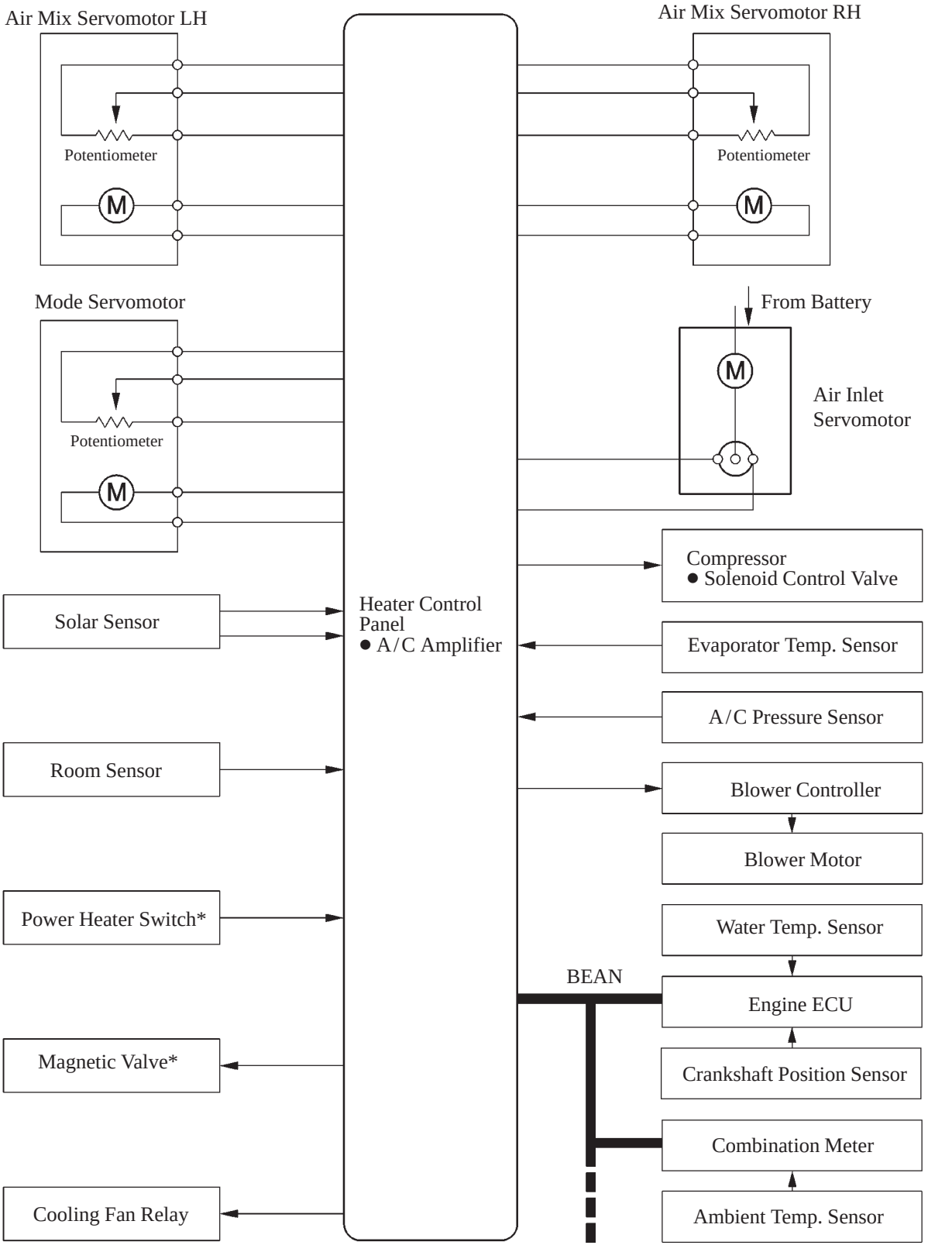

*: with Power Heater

240BE40

▶ PTC Heater ◀

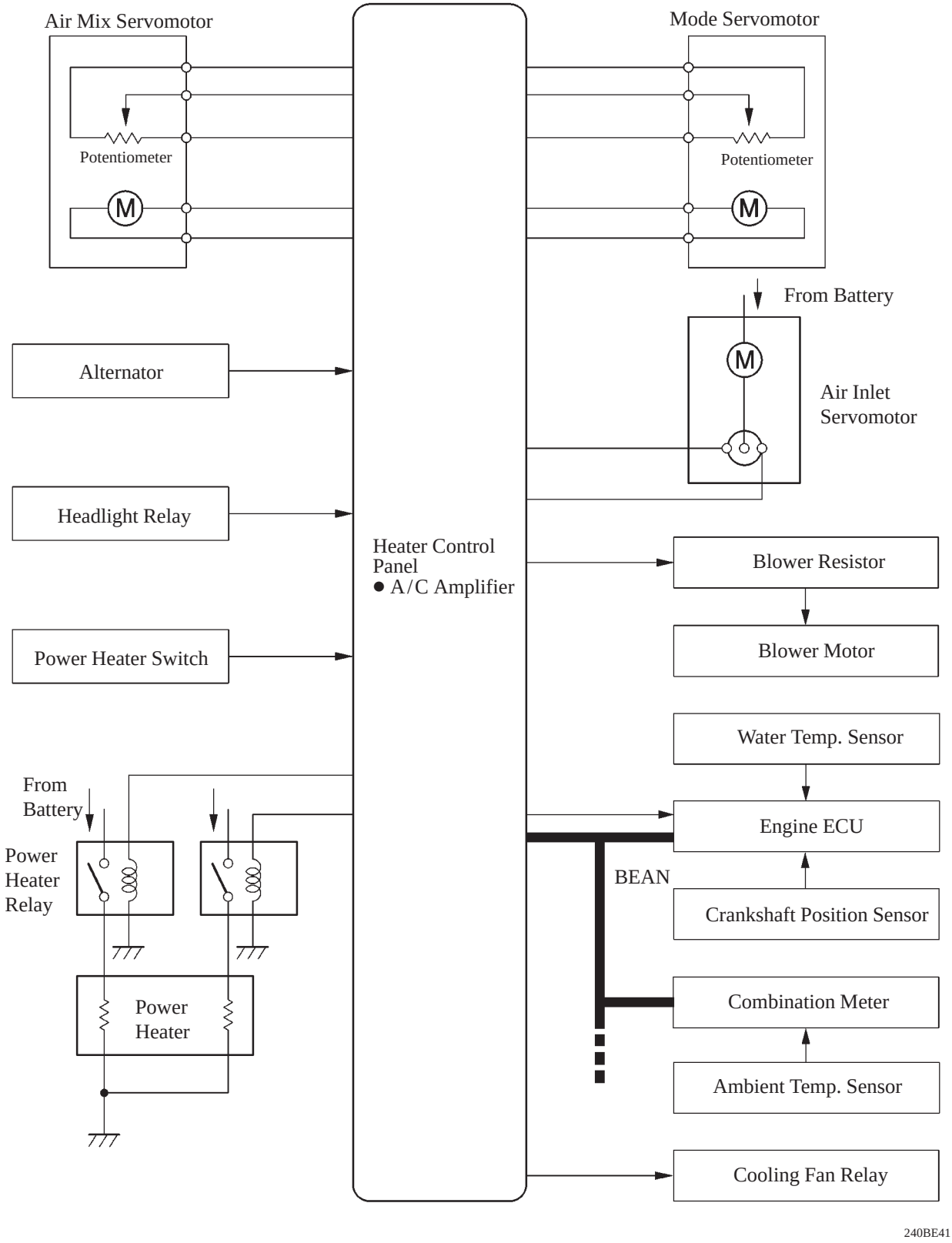

240BE41

BE

■LAYOUT OF MAIN COMPONENT

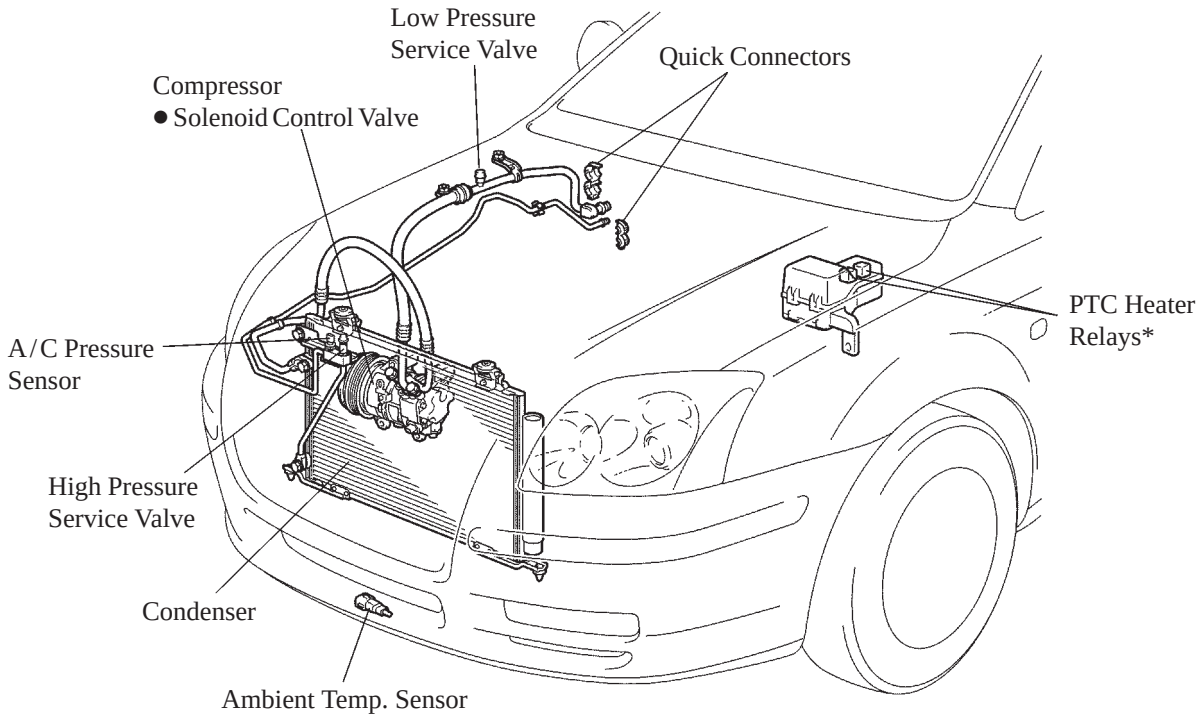

*: with PTC Heater

Manual and Automatic A/C without Hot-Gas Power Heater

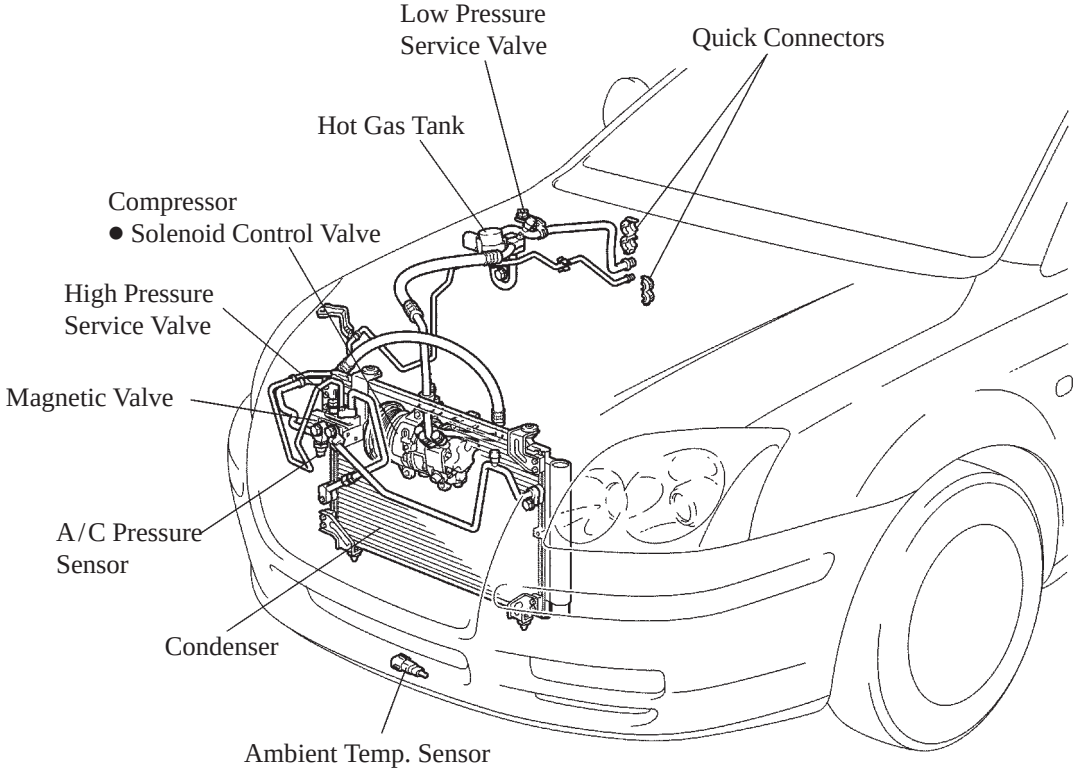

Automatic A/C with Hot-Gas Power Heater

240BE69

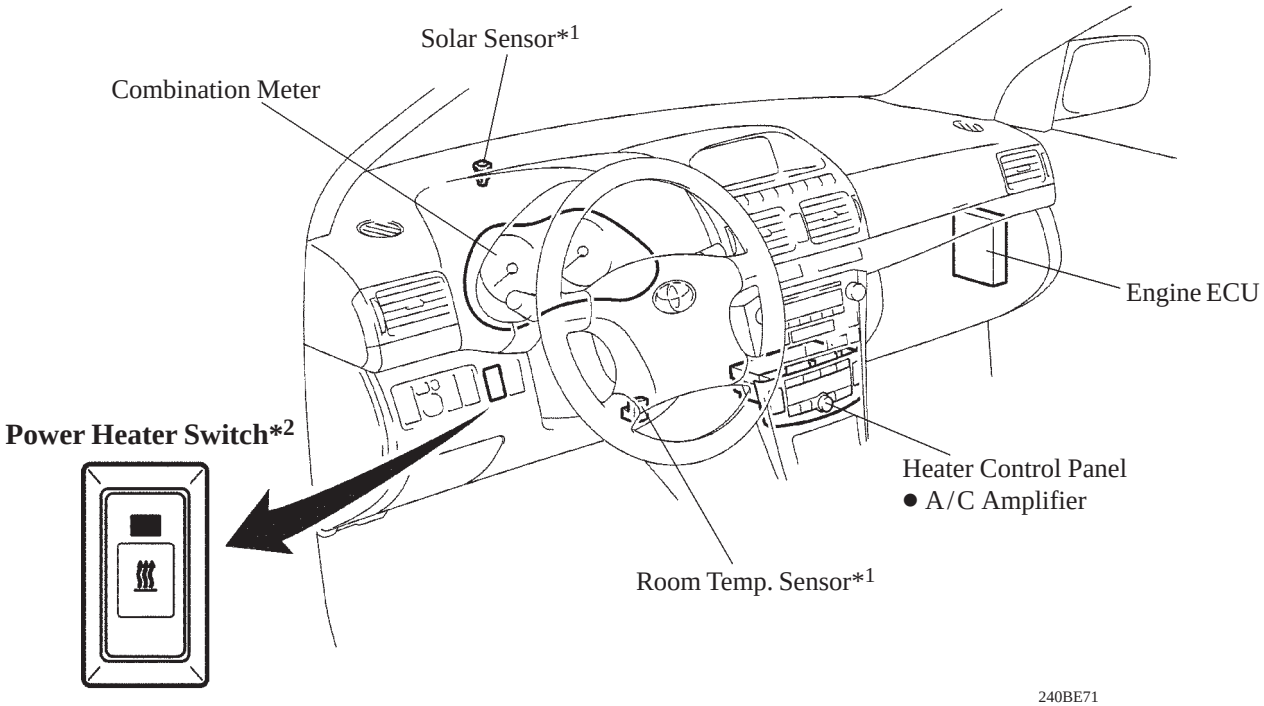

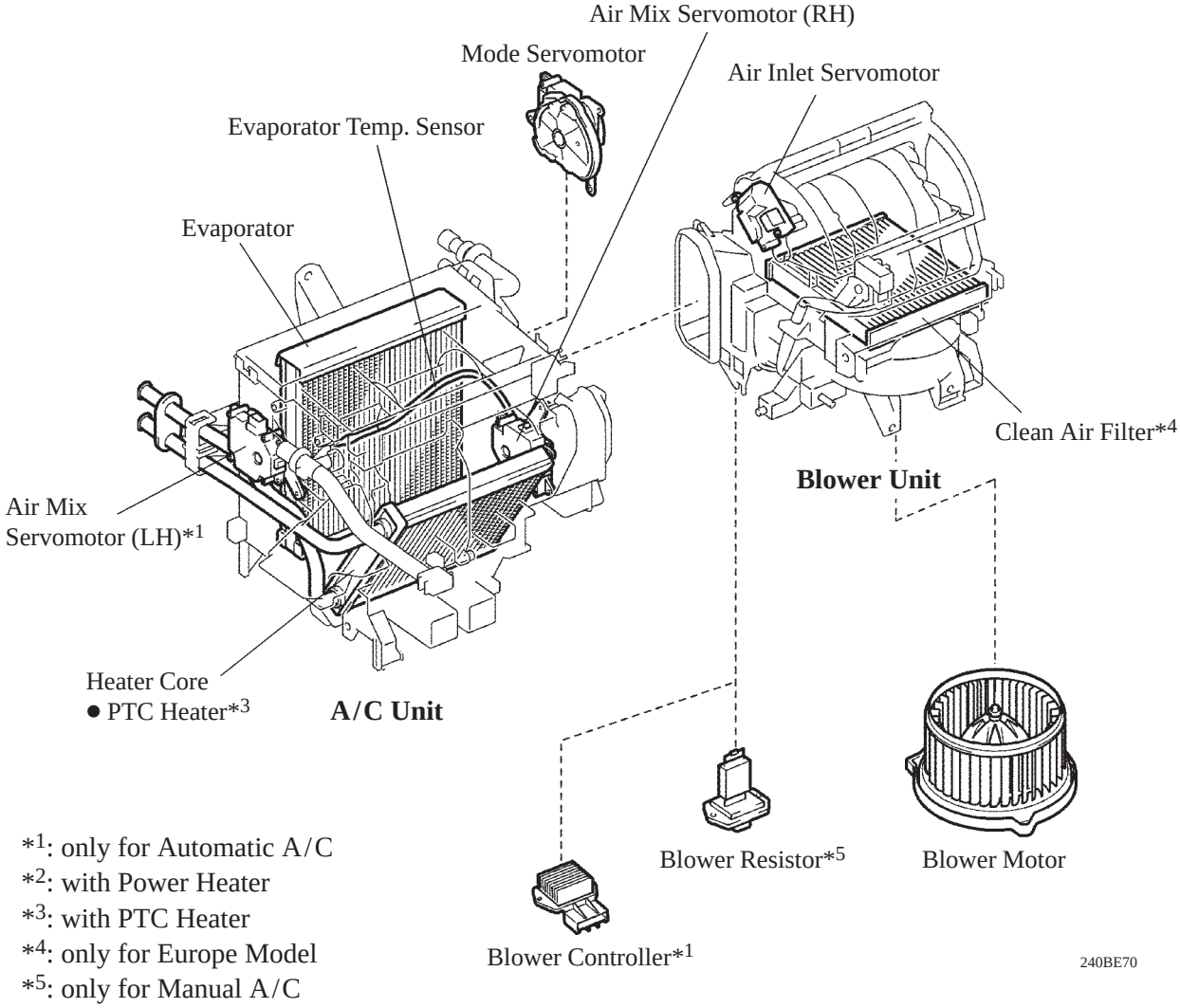

*1: only for Automatic A/C
*2: with Power Heater
*3: with PTC Heater
*4: only for Europe Model
*5: only for Manual A/C

BE

■ MODE POSITION AND DAMPER OPERATION

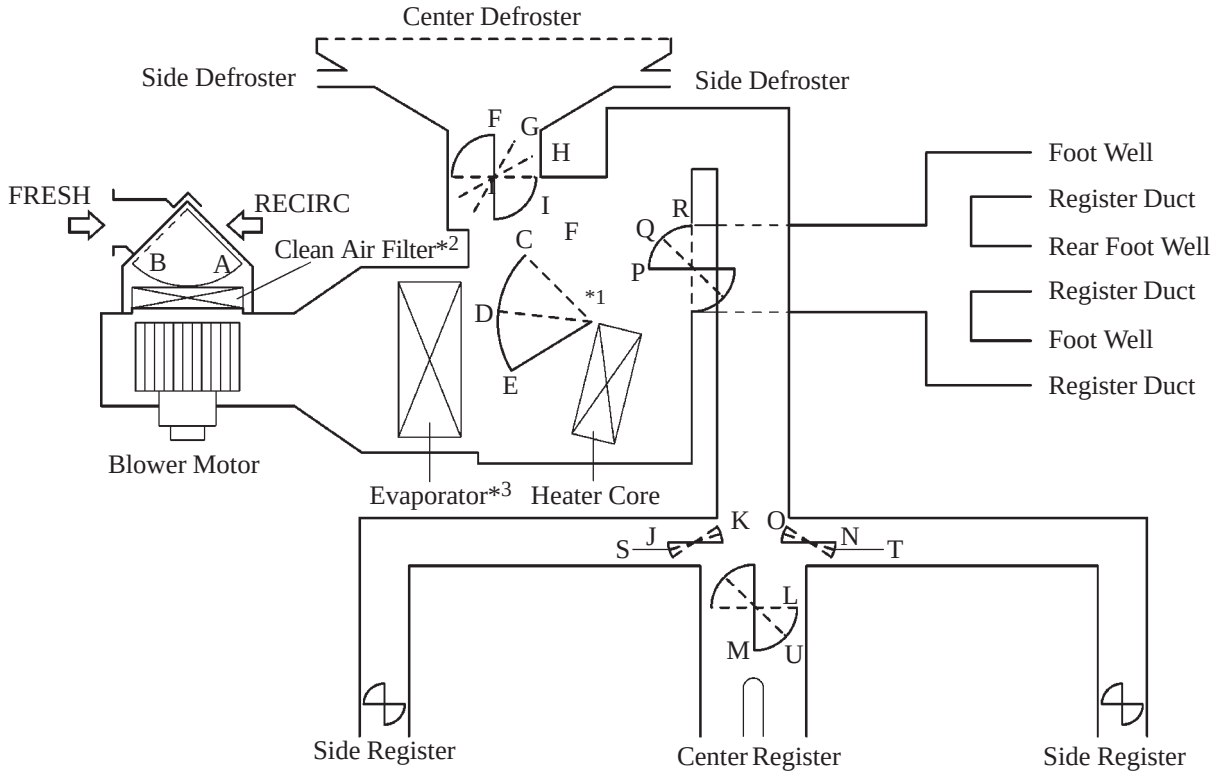

*1: Auto A/C has two air mix dampers.
*2: only for Europe model
*3: with A/C model

240BE74

▶ Function of Main Damper ◀

Control Damper	Operation Position	Damper Position	Operation
Air Inlet Control Damper	FRESH	A	Brings in fresh air.
	RECIRC	B	Recirculates internal air.
Air Mix Control Damper	MAX COLD – MAX HOT Temp. Setting (Auto A/C): 16°C (61°F) – 30°C (86°F)	C – D – E	Varies the mixture ratio of the fresh air and the recirculation air in order to regulate the temperature continuously from HOT to COLD.
Mode Control Damper	 DEF 187BE28	F, K, L, O, R	Defrosts the windshield through the center defroster, side defroster, and side register.
	 FOOT/DEF 187BE27	G, K, L, O, Q	Defrosts the windshield through the center defroster, side defroster, and side resister, while air is also blown out from the foot well register duct.
	 FOOT 187BE26	H, K, L, O, P	Air blows out of the foot well register dust, and side register. In addition, air blows out slightly from the center defroster and side defroster.
	 BI-LEVEL 187BE25	I, J, M, N, P	Air blows out of the center register, side register and foot well register duct.
	 FACE 187BE24	I, J, M, N, R	Air blows out of the center register and side register.

■AIR OUTLETS AND AIR VOLUME RATIONS

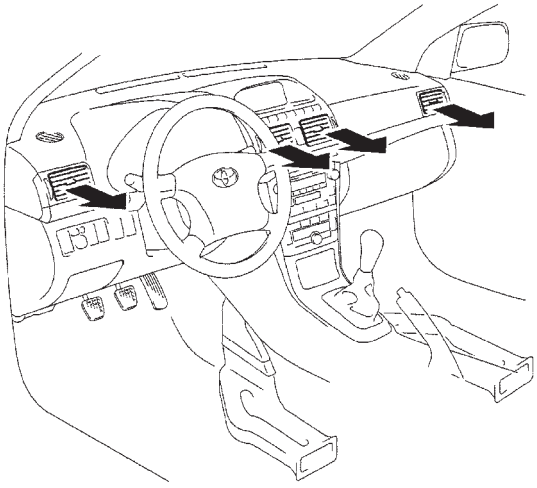

FACE

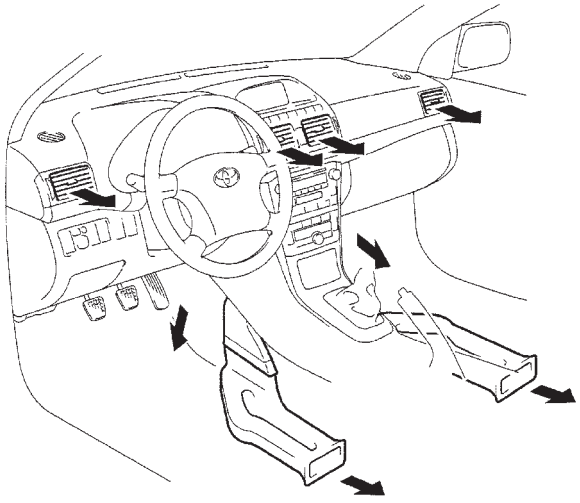

BI-LEVEL

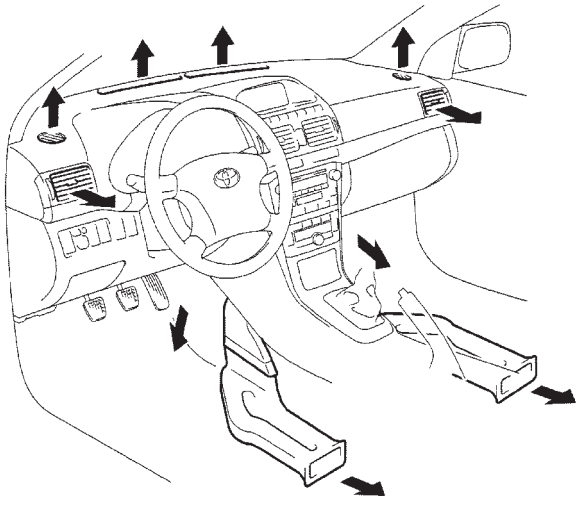

FOOT/DEF

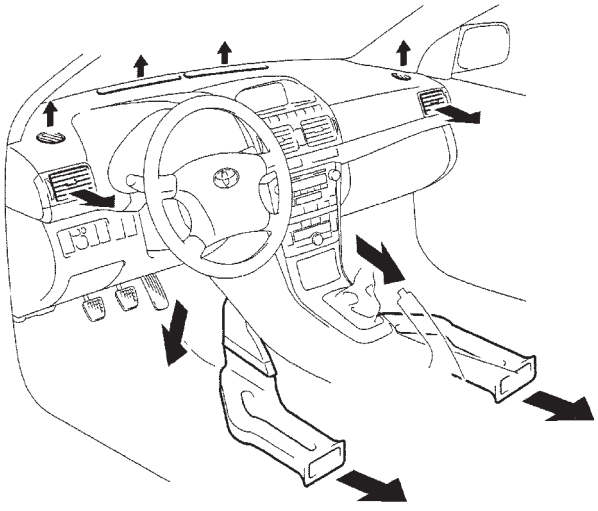

FOOT

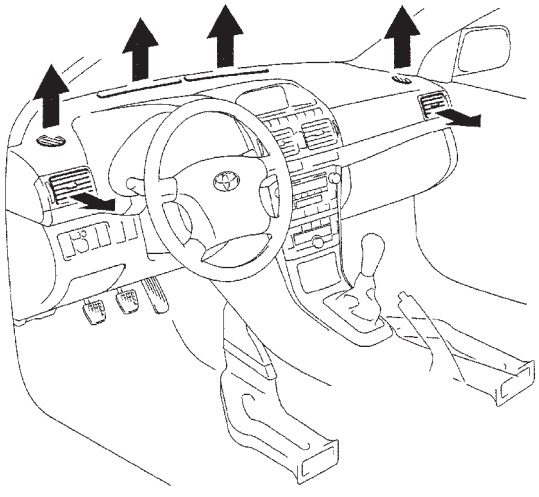

DEF

240BE72

The size of the arrow ← indicates the proportion of airflow volume.

■CONSTRUCTION AND OPERATION

1. Heater Control Panel

for Heater and Manual A/C:

The rotary switch and push switch type heater control panel is used.

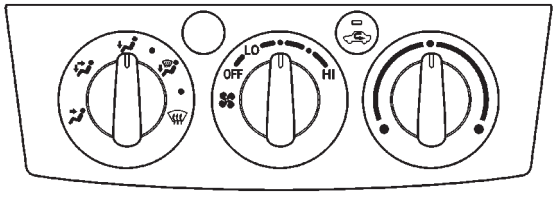

240BE81

Only for Heater

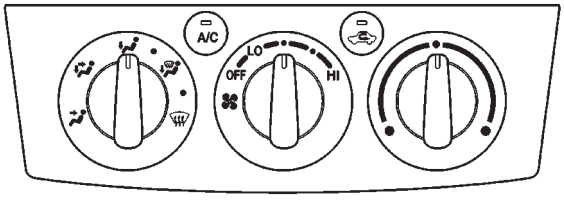

240BE82

Manual A/C

for Automatic A/C:

- The rotary switch and push switch type heater control panel with LCD (Liquid Crystal Display) uses to ensure excellent visibility.
- Along with the adoption of the right/left independent temperature control, the temperature control switches for the driver and the front passenger have been located closer to the respective seats to enhance their ease of use.
- This heater control panel enables finer airflow adjustments by increasing the number of blower adjustment step (4 steps → 10 steps).

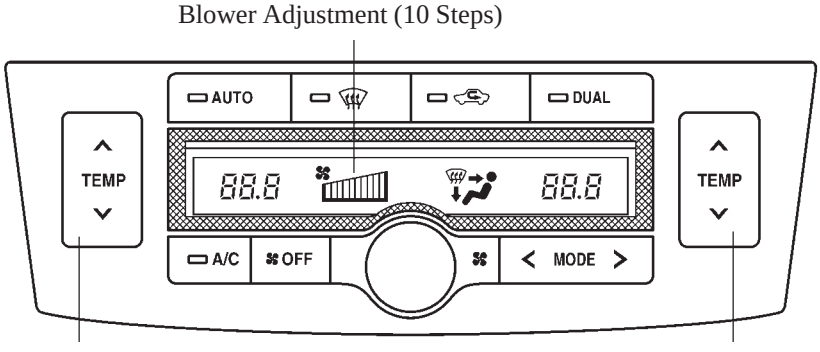

Temperature Control Switch (Driver Side)

Temperature Control Switch (Front Passenger Side)

240BE83

2. Air Conditioner and Blower Units

General

- A semi-center location air conditioner unit, in which the evaporator and heater core are placed in the vehicle's longitudinal direction, has been adopted. As result, the air conditioner unit has been made compact and lightweight.

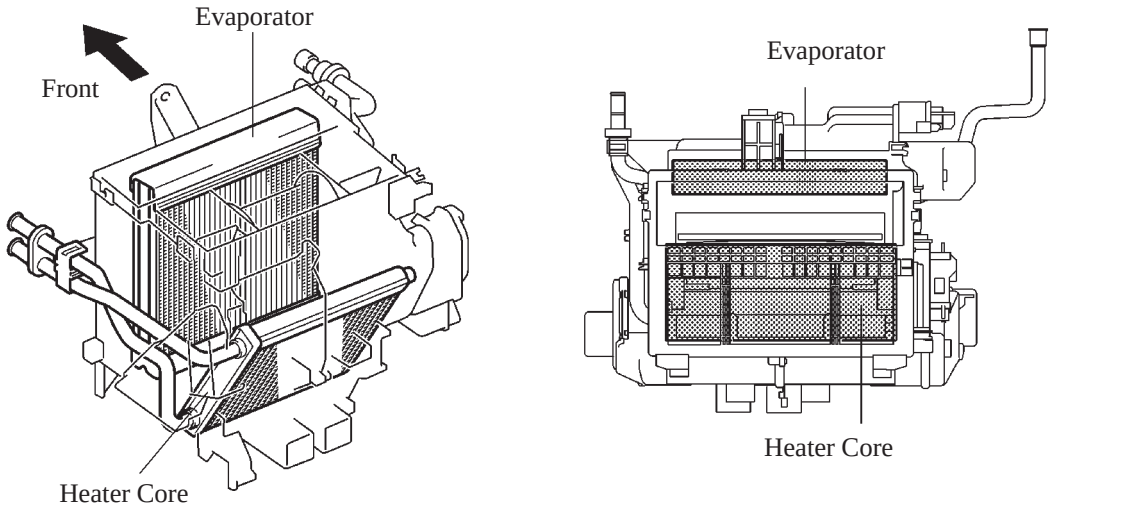

240BE84

- A clean air filter (Particle, High efficiency type) that excels in the removal of dust and pollen, located in the blower unit is provided in the Europe model. This filter, which cleans the air in the cabin, is made of polyester. Thus, it can be disposed of easily as a combustible material, a feature that is friendly the environment.
  To facilitate service, the clean air filter can be replaced by merely removing the glove box.

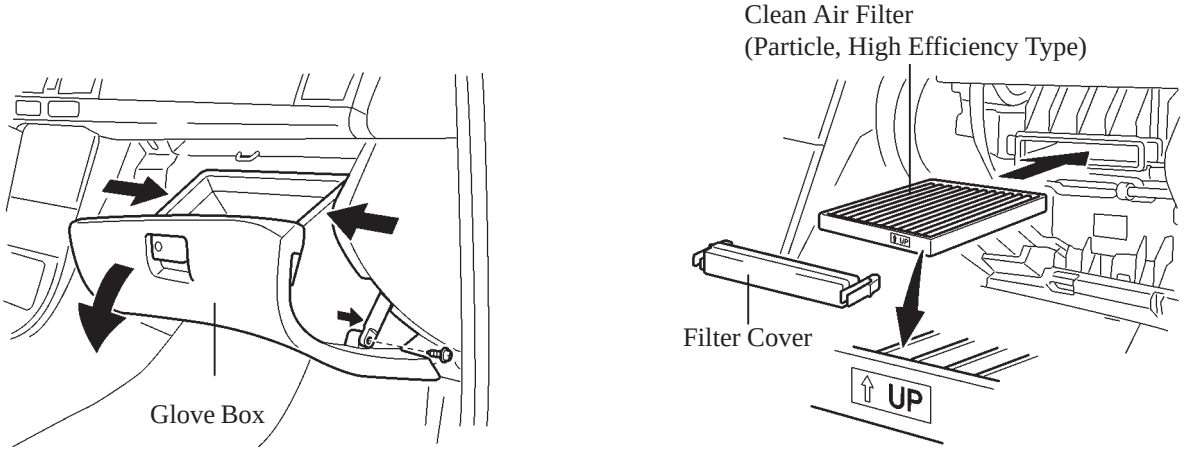

240BE85

Service Tip

The replacement interval for the clean air filter is 22500 km or 13500 mile in the normal condition, and 15000 km or 9000 mile in the dusty condition. However, it varies with use conditions or environment.

Evaporator

- An RS (Revolutionary Slim) evaporator has been adopted. This evaporator consists of tank tube, inner fin and plate. This evaporator uses a thinner core material for the inner fins, and the core has been made denser by reducing the fin height, fin tube height, and fin pitch. As a result, an evaporator that is significantly more compact and lightweight has been realized.
- The surface of the evaporator has been coated with a type of resin that contains an antibacterial agent in order to minimize the source of foul odor and the propagation of bacteria. The substrate below this coating consists of a chromate-free layer to help protect the environment.

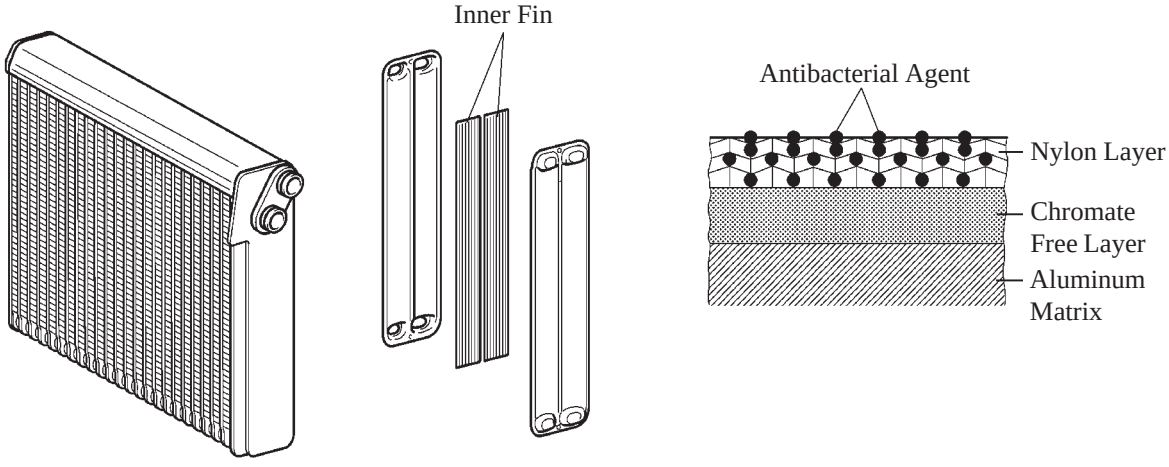

240BE86

Heater Core

- A compact, lightweight, and highly efficient straight flow (full-path flow) aluminum heater core has been adopted.

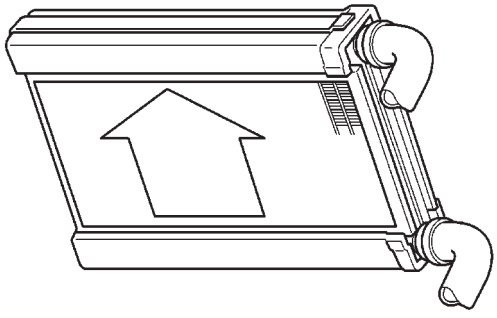

New

151BE21

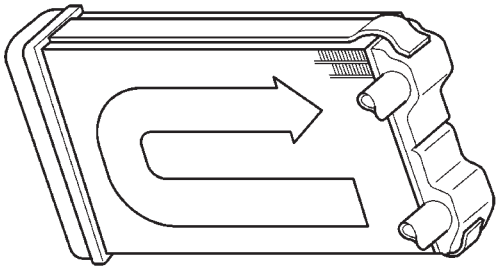

Previous

151BE22

- There are two types of heater cores (with or without a PTC heater) on the new Avensis.
- Two PTC heaters have been built into the heater core of the PTC (Positive Temperature Coefficient) heater model. The PTC heaters have been built into the heater core tubes. Each PTC heater contains electrodes that are interposed with a PTC element, to which current is applied in order to warm the air that passes through the fins. The number of elements to which the current is applied is controlled in accordance with conditions. This control is effected by the A/C amplifier. For details, see the BE-71.

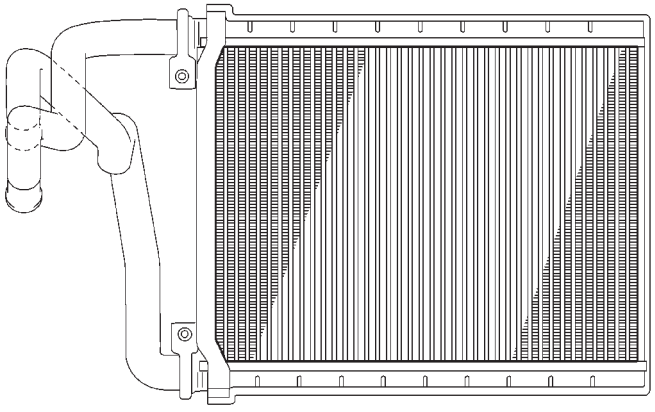

240BE87

without PTC Heater

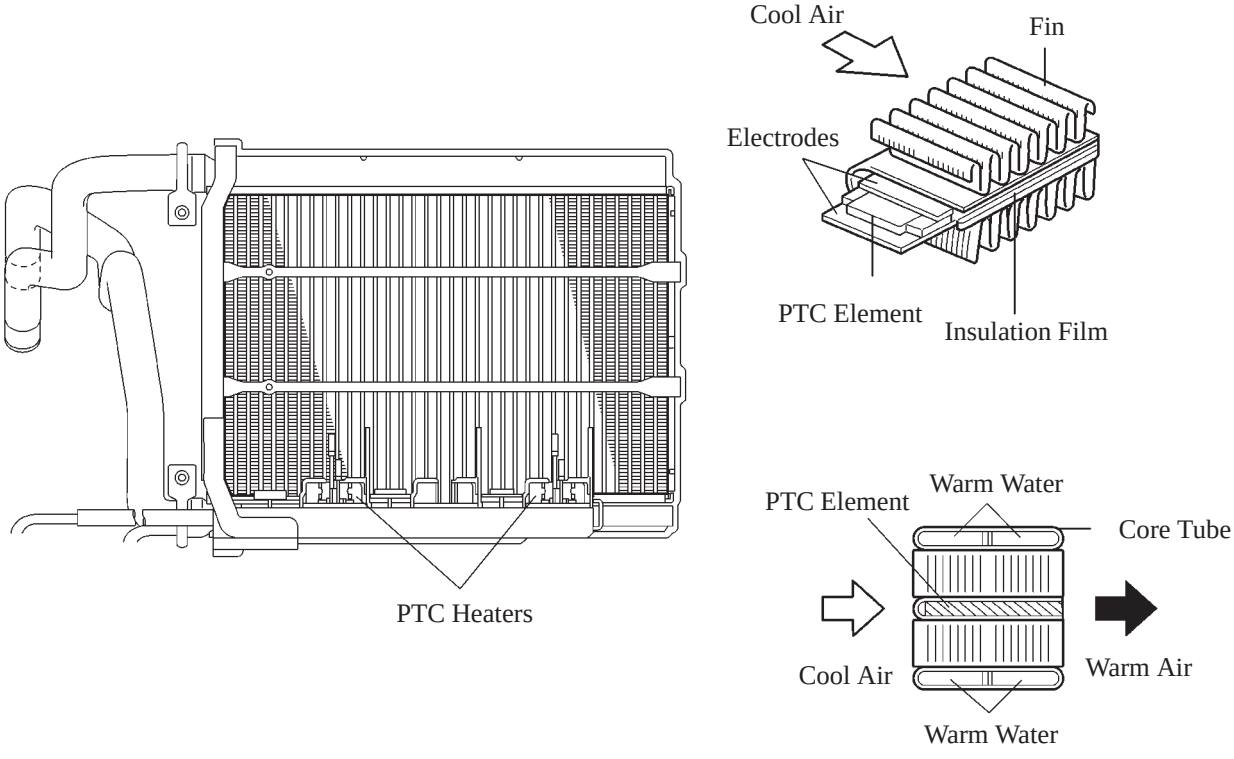

with PTC Heater

240BE88

3. Condenser

General

The new Avensis uses a sub-cool condenser. This is a multi-flow condenser consisting of two cooling portions: a condensing portion and a super-cooling portion, and a gas-liquid separator (modulator) all integrated together. This condenser has adopted a sub-cool cycle for its cooling cycle system to improve heat-exchanging efficiency.
The new Avensis uses a condenser core to improve performance.

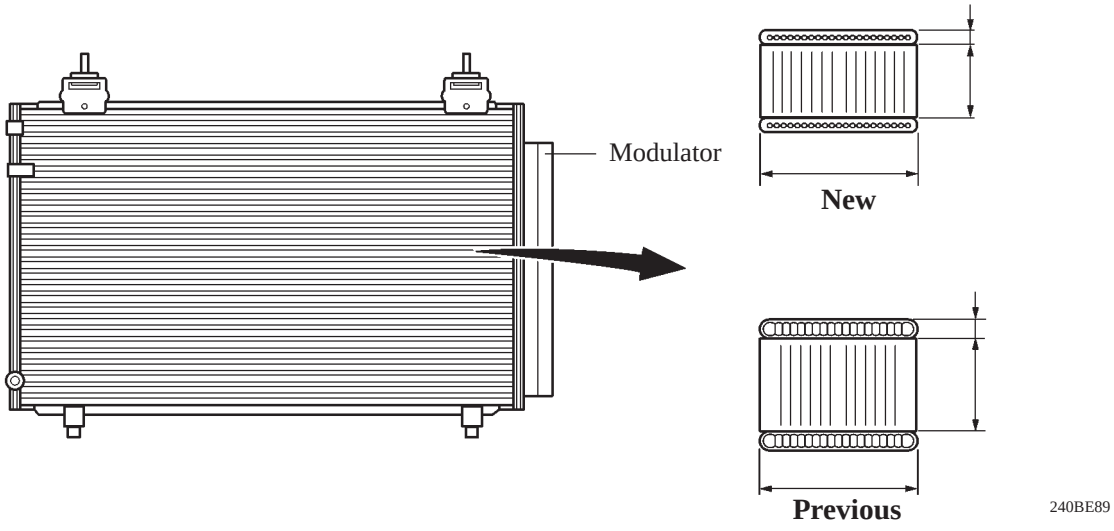

The condenser of the hot-gas power heater model consists of the condenser portion, a magnetic valve, orifice, and an accumulator. The condenser portion is the same as in the model without a hot-gas power heater.

- The magnetic valve switches the refrigerant circuits in accordance with the signals from the A/C amplifier.
- The orifice lowers the pressure of the refrigerant and partially gasifies it.
- The accumulator allows the refrigerant to flow through the cycle when the refrigerant discharge temperature (or pressure) of the compressor is high. If it is low, the accumulator temporarily stores the refrigerant to regulate the flow rate.

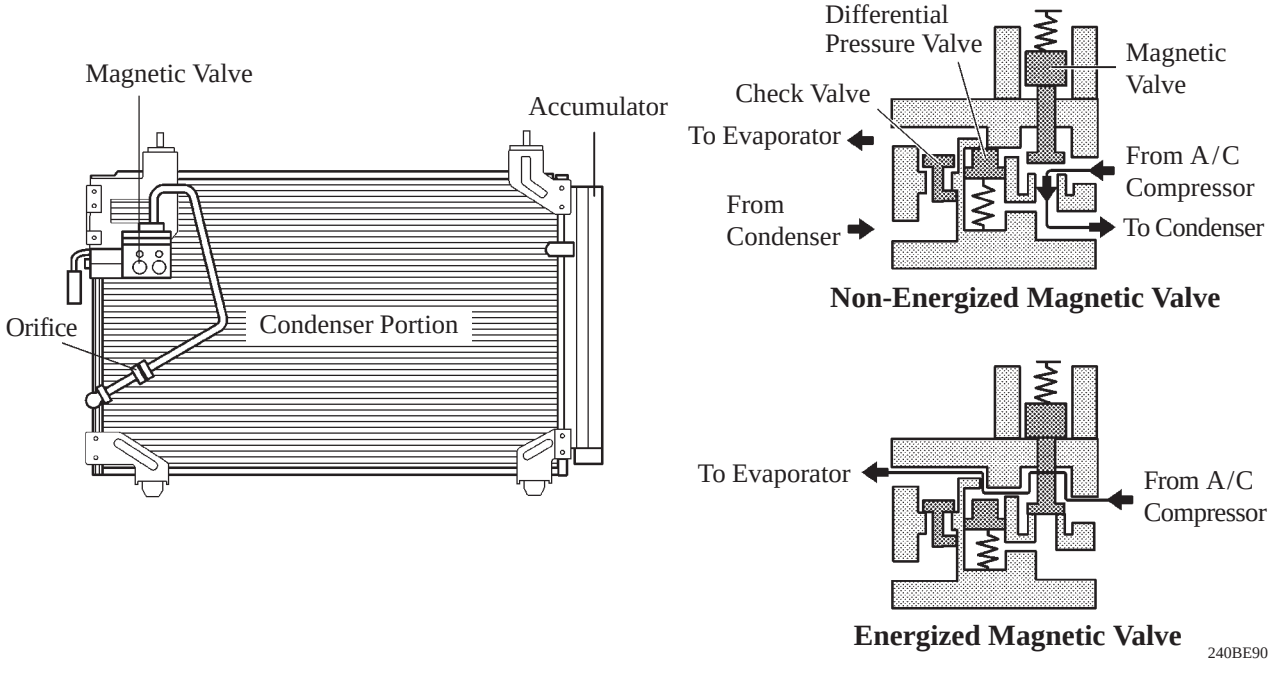

Sub-Cool Cycle

In the sub-cool cycle, after the refrigerant passes through the condensing portion of the condenser, both the liquid refrigerant and the gaseous refrigerant that could not be liquefied are cooled again in the super-cooling portion. Thus, the refrigerant is sent to the evaporator in an almost completely liquefied state.

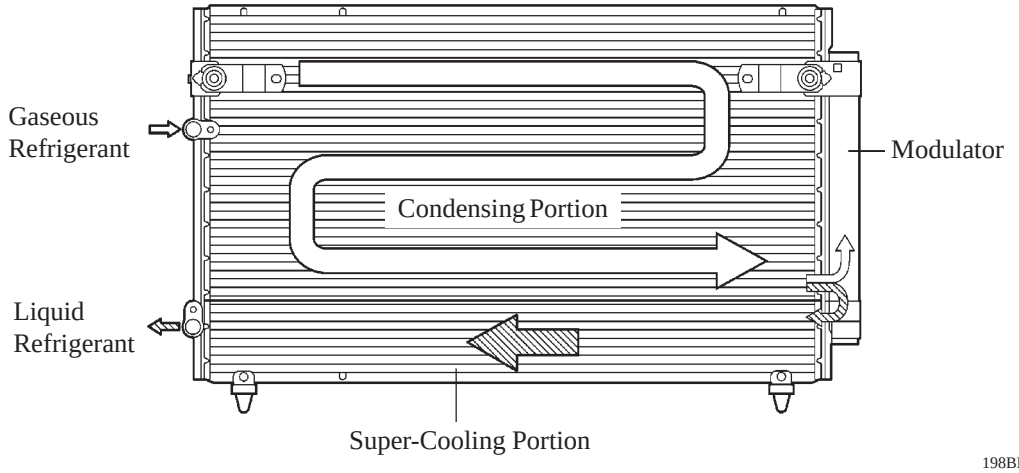

198BE32

Service Tip

with Sight Glass Model (RHD Model on the 1AZ-FE, 1AZ-FSE Engine):

The point at which the air bubbles disappear in the refrigerant of the sub-cool cycle is lower than the proper amount of refrigerant with which the system must be filled. Therefore, if the system recharged with refrigerant based on the point at which the air bubbles disappear, the amount of refrigerant would be insufficient. As a result, the cooling performance of the system will be affected. If the system is overcharged with refrigerant, this will also lead to a reduced performance.
For the proper method of verifying the amount of the refrigerant and to recharge the system with refrigerant, see the Avensis Repair Manual (Pub. No. RM1018E).

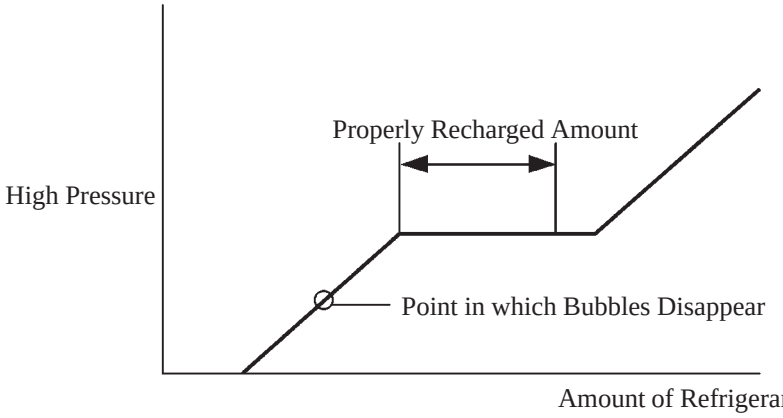

152BE40

without Sight Glass Model (Except RHD Model on the 1AZ-FE, 1AZ-FSE Engine):

Because the sight glass for checking the condition of the refrigerant has been discontinued, cannot inspect the refrigerant volume. On-vehicle inspection can be only measuring the refrigerant pressure with a manifold gauge. For detail, see the Avensis Repair Manual (Pub. No. RM1018E).

4. Compressor

General

This compressor is continuously variable capacity type in which its capacity varies in accordance with the cooling load of the air conditioner.

- A solenoid control valve that adjusts the suction pressure so that the suction pressure can be controlled as desired is provided.
- A/C pulley has been adopted the plastic DL (Damper Limiter) type.

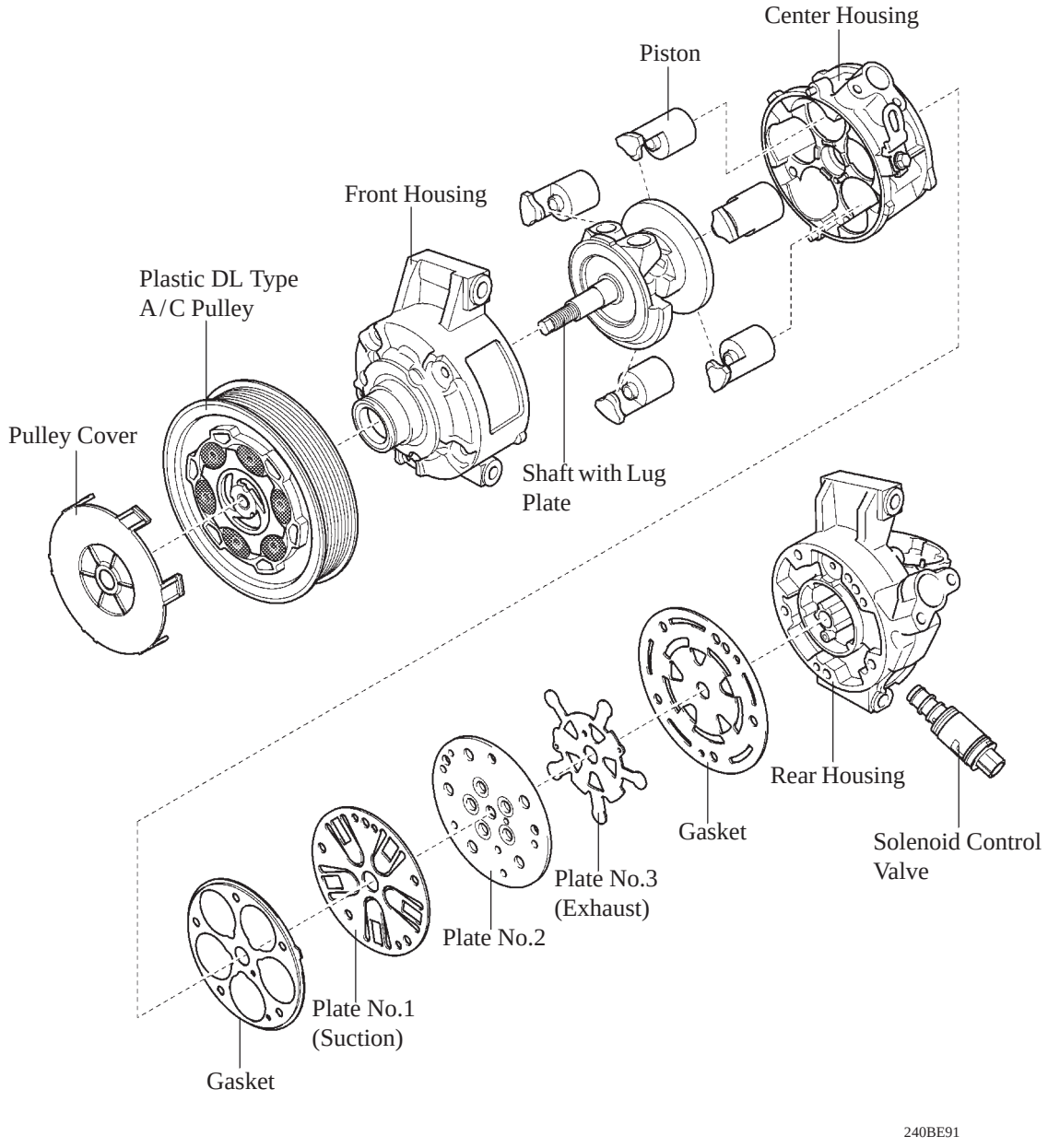

Service Tip

The compressor cannot be disassembled, so it must be replaced as an assembly. For details, see the Avensis Repair Manual (Pub. No. RM1018E).

Construction and Operation

1) Plastic DL Type A/C Pulley

This pulley contains a damper to absorb the torque fluctuations of the engine and a limiter mechanism to protect the drive belt in case the compressor locks. In the event that the compressor locks, the limiter mechanism causes the spoke portion of the pulley to break, thus separating the pulley from the compressor. To reduce weight, the pulley portion is made of plastic.

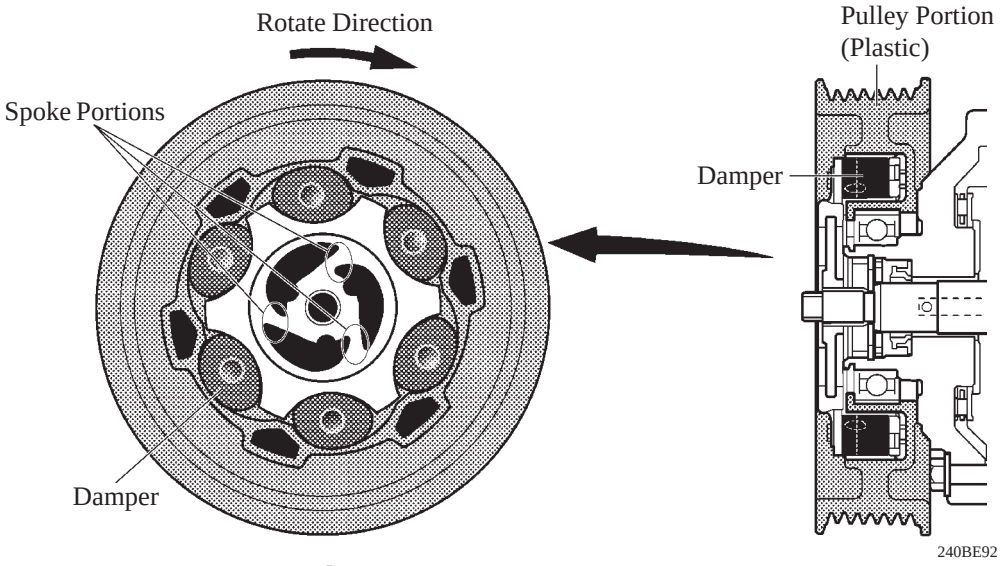

Limiter Mechanism

2) Compressor

- This compressor consists of the shaft, lug plate, piston, shoe, crank chamber, cylinder, and solenoid control valve. When the shaft rotates, this movement is transmitted via the lug plate that is connected to the shaft to rotate the swash plate. This rotational movement of the swash plate is transmitted via the shoe to the reciprocal movement of the piston in the cylinder, which performs the suction, compression, and discharge of the refrigerant.

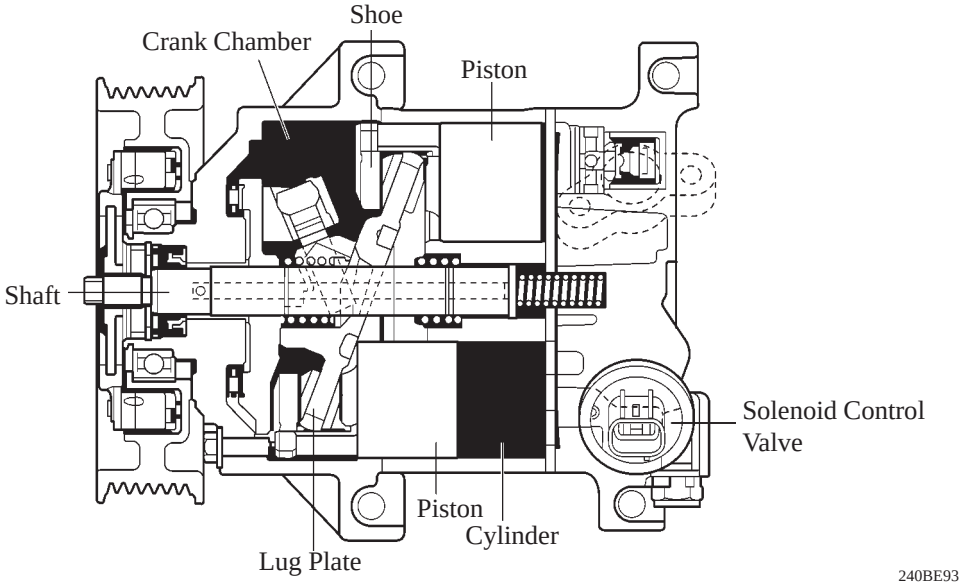

- The crank chamber is connected to the suction passage. A solenoid control valve is provided between the suction passage (LO pressure) and the discharge passage (HI pressure). The solenoid control valve operates under duty cycle control in accordance with the signals from the A/C amplifier. Duty cycle control, which changes linearly between 0 to 100%, varies the discharge capacity.

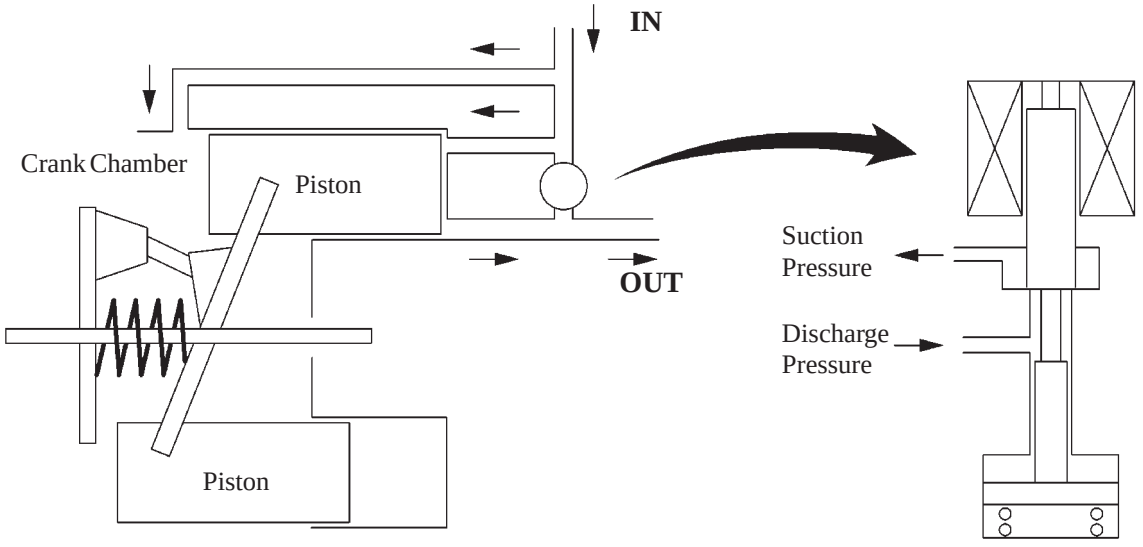

240BE94

- When the solenoid control valve closes (solenoid coil is energized), a difference in pressure is created and the pressure in the crank chamber decreases. Then, the pressure that is applied to the right side of the piston becomes greater than the pressure that is applied to the left side of the piston. This compresses the spring and tilts the lug plate. As a result, the piston stroke increases and the discharge capacity increases.

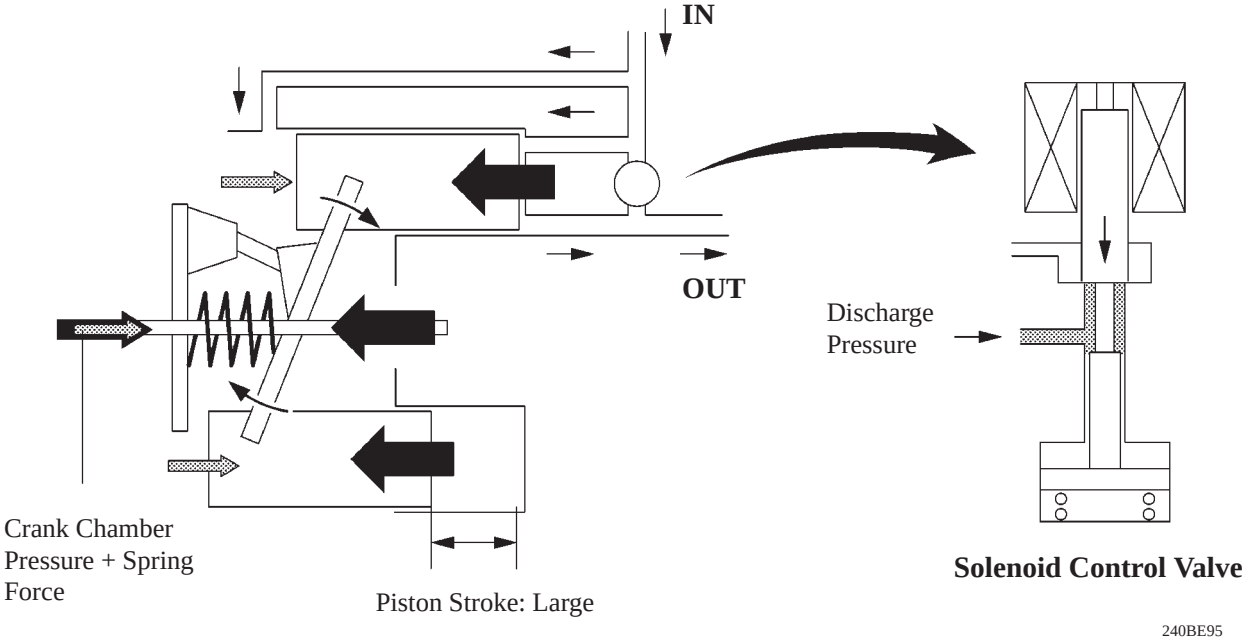

240BE95

- When the solenoid control valve opens (solenoid coil is not energized), the difference in pressure disappears. Then, the pressure that is applied to the left side of the piston becomes the same as the pressure that is applied to the right side of the piston. Thus, the spring elongates and eliminates the tilt of the lag plate. As a result, there is no piston stroke and the discharge capacity turns to 0.

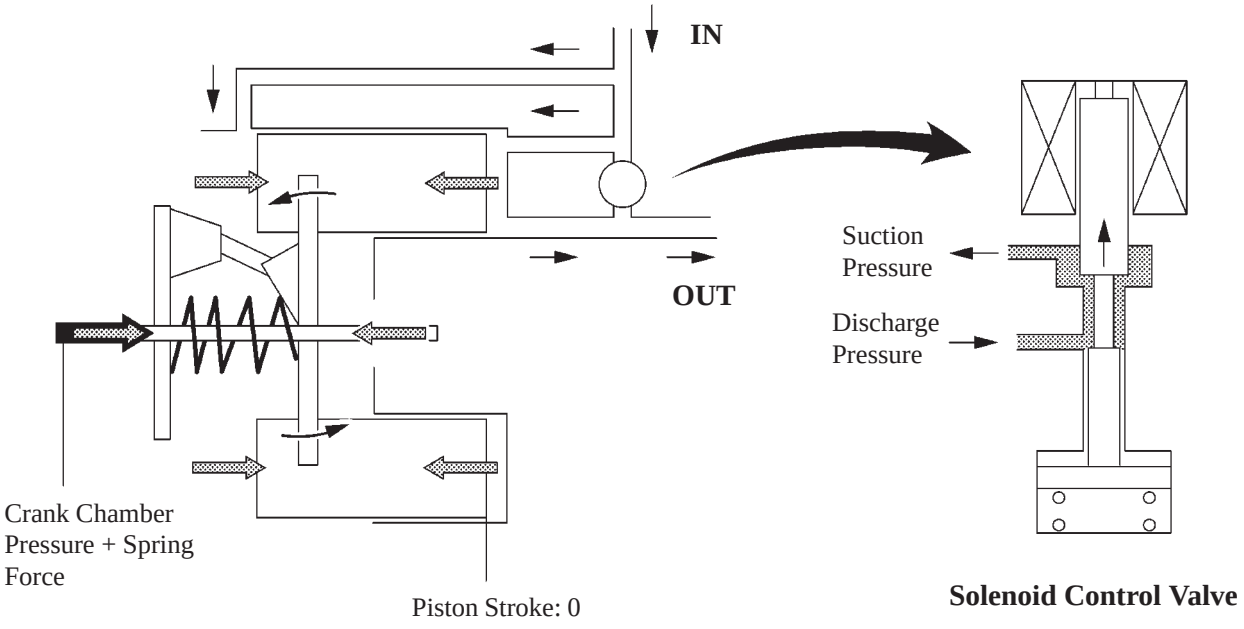

240BE96

■ AIR CONDITIONER CONTROL

1. Air Conditioner

Control		Outline	Auto	Manual
Calculation of Required Outlet Air Temperature (TAO: Temperature Air Outlet)		After receiving the signals from the sensors and the temperature control switching setting for driver and front passenger. Then, it uses a prescribed formula to calculate the required outlet air temperature, and regulate the servomotors and the blower motor. This outlet air temperature is required in order to maintain the set temperature in a stable manner.	○	—
Outlet Air Temp. Control	MAX Fix Control	This control sets the TAO to –200 when the temperature is set to MAX COOL, and to 200 when the temperature is set to MAX HOT.	○	—
	Air Mix Damper Control	In response to the temperature control switch setting, the required outlet air temperature, evaporator temperature sensor, and water temperature sensor compensations are used by the air mix damper control to calculate a tentative damper opening angle, through an arithmetic circuit in the air mix damper, to arrive at a target damper opening angle.	○	—
		This control calculates a tentative damper opening angle for the resistance value in accordance with the temperature control switch setting, and arrives at a target damper opening angle through an arithmetic circuit in the air mix damper.	—	○
Blower Control	Blower Motor Start Up Control	When the blower motor is started up, the blower voltage in the LO speed in output to the blower controller for 2 seconds. This is designed to protect the blower controller from a sudden start up voltage surge.	○	—
	Manual Control	Sets the blower speed according to operation of the blower switch.	○	○
	Automatic Control	**Step Less Air Volume Control:** ● When the AUTO switch in the heater control panel is pushed, the A/C amplifier automatically regulates the voltage to the blower controller, in accordance with the required outlet air temperature, to deliver step less air volume. **Warm-up Control:** ● When the air outlet is in the FOOT, BI-LEVEL, or FOOT/DEF mode, the blower will not operate until the water temperature increases above a prescribed value. When the temperature increases above a prescribed value, the blower motor operates at the LO speed. Thereafter, control is effected by comparing the airflow calculated from the water temperature and the airflow calculated from the TAO.	○	—
		Time-Lagged Air Flow Control: ● 2 types of time-lagged air flow control (in accordance with the detected by the evaporator temperature sensor) help prevent hot air from being emitted from FACE or BI-LEVEL vent. For details, see page BE-61.	○	—

(Continued)

Control		Outline	Auto	Manual
Blower Control	Automatic Control	**Sunlight Air Flow Control:** ● Controls the blower speed in accordance with the intensity of the sunlight when the air outlet mode is at FACE or BI-LEVEL. The blower speed can be adjusted in response to the signal received from the solar sensor.	○	—
Air Outlet Control	Manual Control	Changes the air outlet in accordance with the selected position of the mode select switch.	○	○
	Automatic Control	**Mode Damper Switching Servomotor Control:** ● When the AUTO switch of the heater control panel has been turned ON, automatic control causes the mode servomotor to rotate to a desired position in accordance with the target damper opening, which is based on the calculation of the TAO. **Low-Temperature FOOT/DEF Control:** ● In accordance with the water temperature, ambient temperature, amount of sunlight, required outlet temperature (TAO), and vehicle speed conditions, this control automatically switches the blower outlet between the FOOT/DEF modes to prevent the window from becoming fogged when the outside air temperature is low.	○	—
Compressor Control	Refrigerant Pressure Malfunction Detection	By monitoring the A/C pressure sensor signal, this system can judge the refrigerant pressure as being abnormal and turns the operating capacity of the compressor to 0%.	○	○
	Evaporator Temperature Sensor Judgment	When the detected temperature of the evaporator temperature sensor is below –4, the operating capacity of the compressor turns to 0% in order to prevent the evaporator from becoming frosted.	○	○
	Ambient Temp. Sensor Judgment	When the detected temperature of the ambient temperature sensor is below –1.5, the operating capacity of the compressor turns to 0%.	○	○
	Variable Capacity Compressor Control	The variable capacity compressor control consists of 7 controls. For details, see page BE-62. ● Acceleration Control ● Deceleration Control ● Low-Speed Control ● Frost Control ● A/C switch ON/OFF Control ● Malfunction ON/OFF Control ● Compressor Protect Control	○	○
	During Idling Compressor ON/OFF Control*	At idle, the engine ECU outputs a variable capacity prohibit signal to the A/C amplifier. As a result, the A/C amplifier switches from the duty cycle control to ON/OFF control.	○	○

(Continued)

Control		Outline	Auto	Manual
DEF Switch Linked Control	Compressor Control*	When the A/C switch is OFF and DEF switch is ON, A/C amplifier operates automatically compressor.	○	○
	Blower Control	When the blower switch is turned OFF, and DEF switch is turned ON, the blower motor will turn on in the automatic control.	○	—
Electronic Cooling Fan Control		The A/C amplifier and the engine ECU control the cooling fan speed in accordance with the water temperature signal, vehicle speed signal, and refrigerant pressure signal.	○	○
Self-Diagnosis		Check the indicator, sensor, and actuator the check in accordance with operation of the heater control panel switches, then LCD portion a DTCs (Diagnostic Trouble Codes) to indicate if there is a malfunction or not.	○	—

*: Only for Gasoline Engine

2. Time-Lagged Air Flow Control

General

2 types of time-lagged air flow control (in accordance with the detected by the evaporator temperature sensor) help prevent hot air from being emitted from FACE or BI-LEVEL vent.

Evaporator Temperature Sensor at 30°C or more

1) As shown in the diagram on the below, this control turns OFF the blower motor for T1 sec. and turns ON the compressor to cool the air conditioner unit. After T1 sec. has elapsed, the blower motor rotates in the manual LO mode, allowing the cooled air to be discharged from the vents. Thus, the discomfort that is associated with the discharge of warm air is prevented.
2) Between T2 and T3 sec. the air flow volume according to the time-lagged air flow control and the air flow volume of the blower control according to the calculation of the TAO are compared. The air flow volume is then regulated at the smaller volume of the two.
3) After T3 sec. has elapsed, control is effected by the blower control according to the calculation of the TAO.

Evaporator Temperature Sensor at 30°C or less

1) As shown in the diagram on the below, for T1 sec., the blower motor rotates in the manual LO mode.
2) Thereafter, up to T2 sec., the air flow volume according to the time-lagged air flow control and the air flow volume according to the blower control of the calculation of the TAO are compared. The air flow volume is then regulated at the smaller volume of the two.
3) After T3 sec. has elapsed, control is effected by the blower control according to the calculation of the TAO.

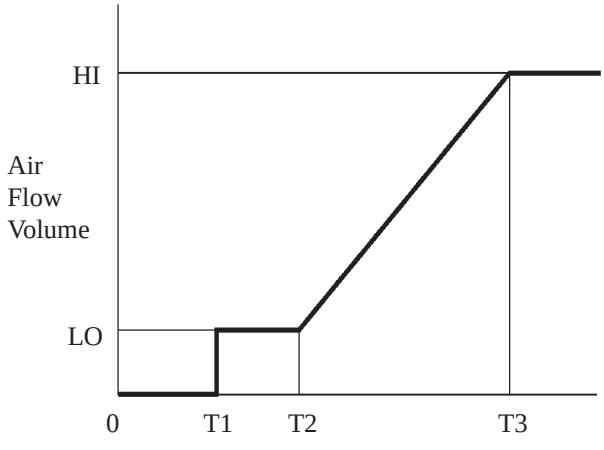

240BE75

at 30°C or more

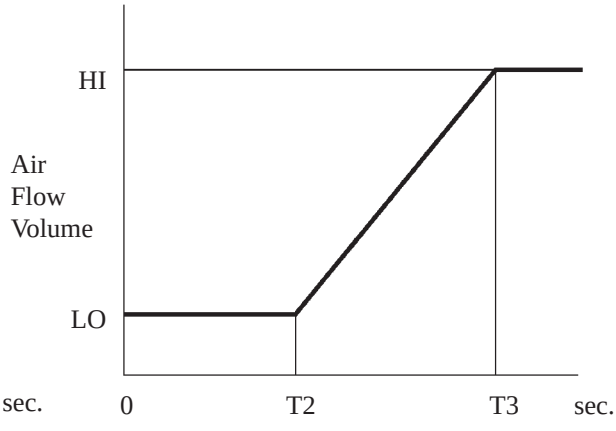

240BE45

at 30°C or more

3. Variable Capacity Compressor Control

General

The variable capacity compressor control constantly compares the compressor operating capacities that have been calculated by the 7 controls. It uses the lowest among them as the actual compressor operating capacity. As a result, efficient compressor control is realized to suit the air conditioner operation conditions and the vehicle driving conditions.

- Acceleration Control
- Deceleration Control
- Low-speed Control
- Frost Control
- A/C Switch ON/OFF Control
- Malfunction ON/OFF Control
- Compressor Protect Control

Acceleration Control

The acceleration control consists of start off and passing acceleration control. When the engine ECU inputs a start off or passing acceleration signal, the A/C amplifier lowers the compressor operating capacity output as shown in the table below. As a result, the proper drivability during acceleration is ensured.

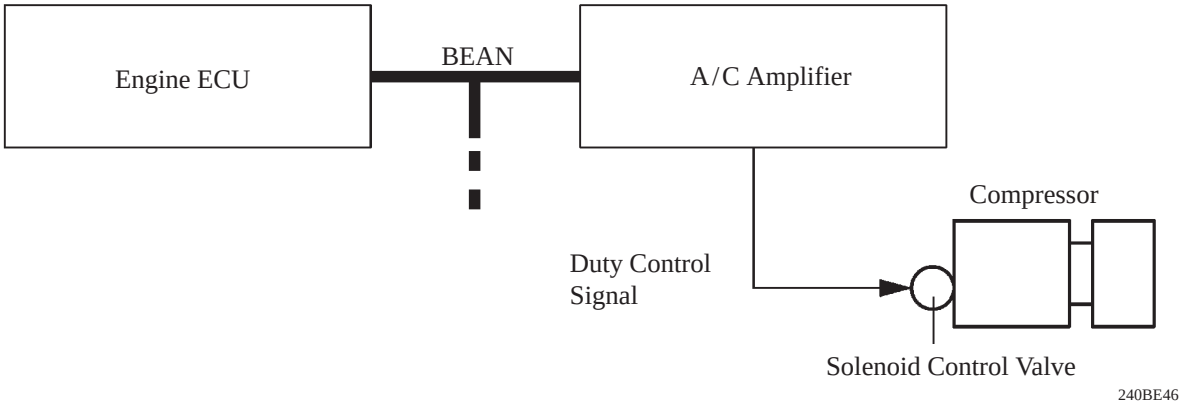

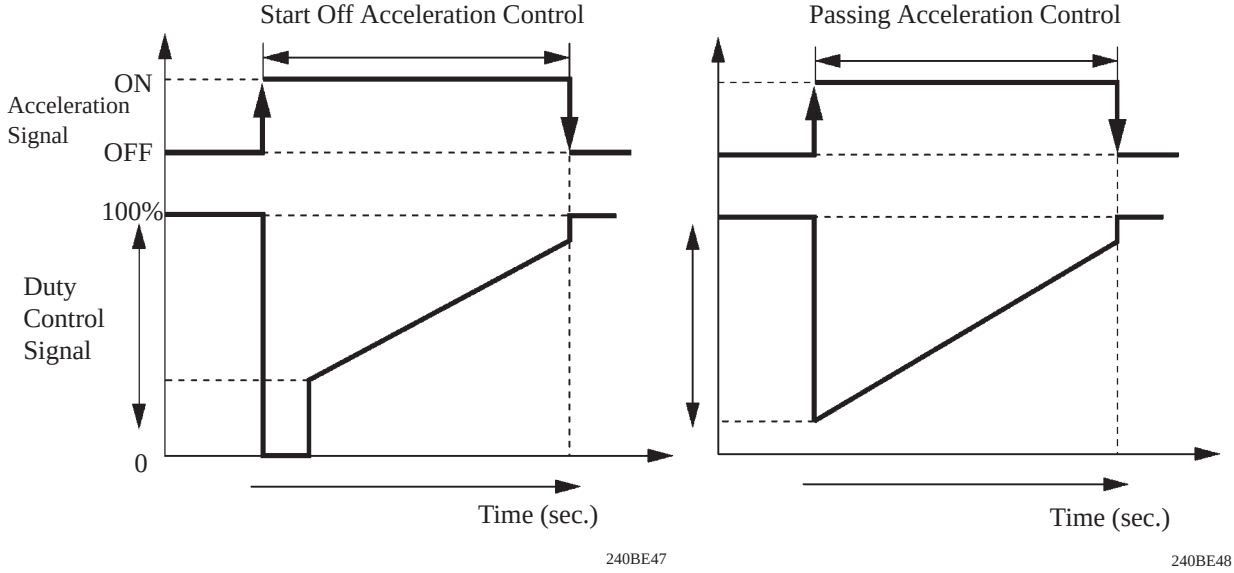

Deceleration Control

When the engine ECU inputs a deceleration signal, the A/C amplifier lowers the compressor operating capacity output as shown in the table below. As a result, the proper fuel economy is ensured during deceleration.

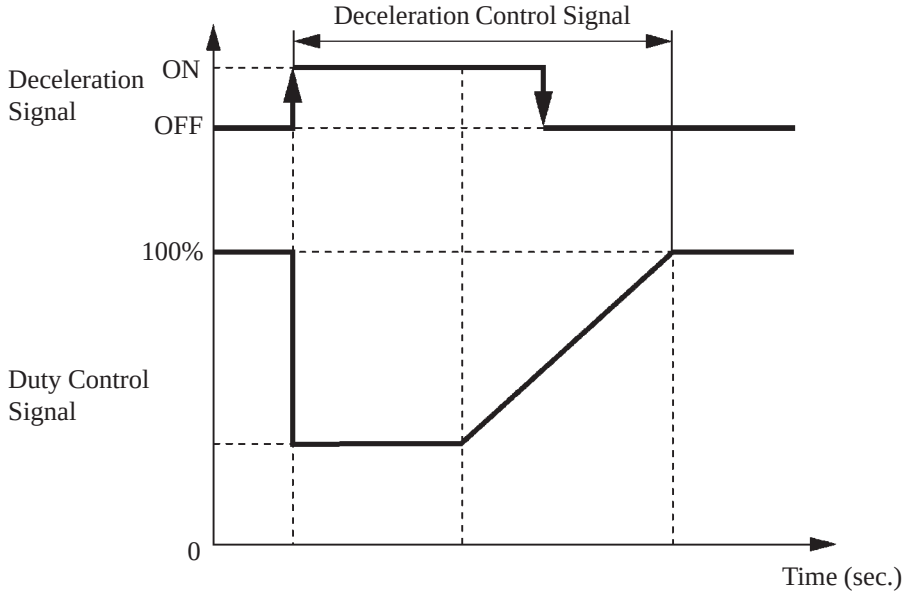

Low-speed Control

When the engine ECU inputs an acceleration signal at low engine speeds, the A/C amplifier lowers the compressor operating capacity output as shown in the table below. As a result, proper drivability at low engine speeds is ensured.

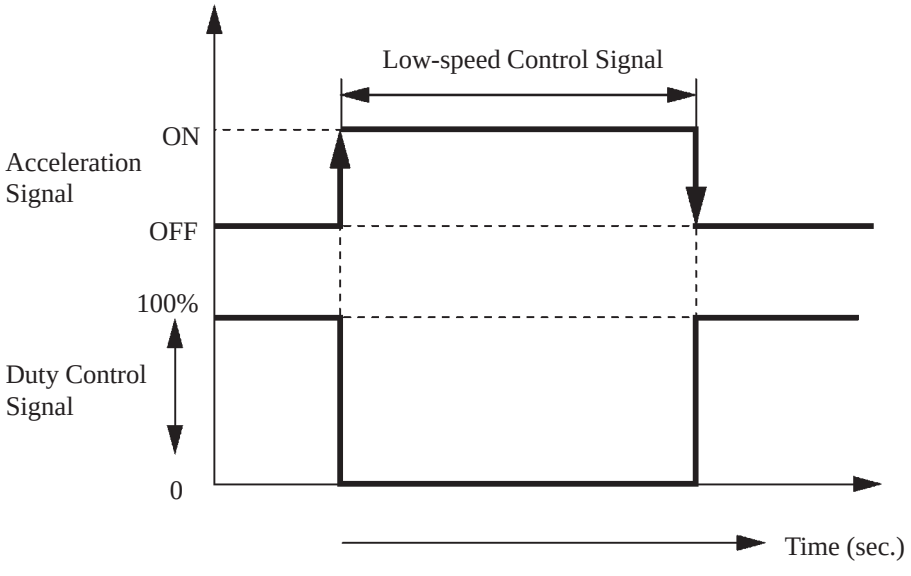

BE

Frost Control

To prevent the evaporator from frosting, this control calculates the compressor operating capacity using a calculation formula that has been established based on deceleration control, evaporator temperature sensor, and A/C pressure sensor signals.

A/C Switch ON/OFF Control

Controls the compressor operating capacity as shown in the following table, in accordance with the A/C switch.

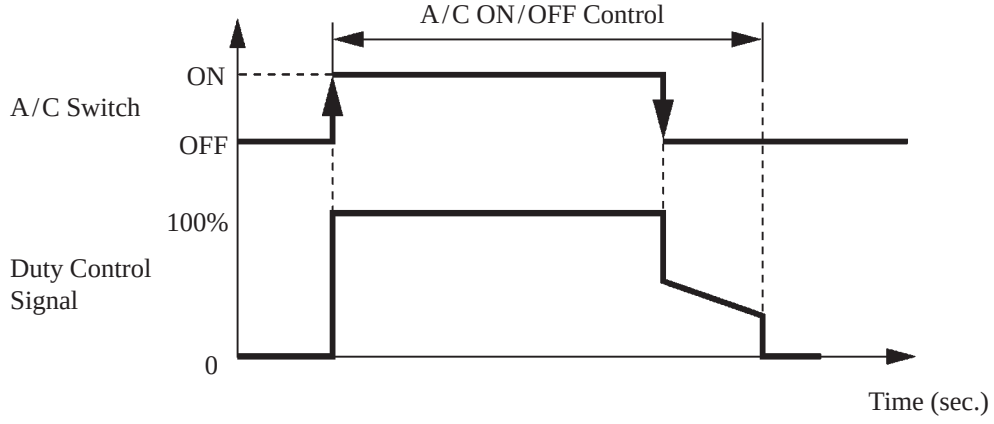

240BE51

Malfunction ON/OFF Control

When a refrigerant pressure malfunction has been input (while the evaporator sensor detects a minimum temperature of 2°C and the ambient temperature is a minimum of 0°C), and the air inlet is in the RECIRC mode, the A/C amplifier determines that a malfunction has occurred and outputs the compressor operating capacity shown in the following table.

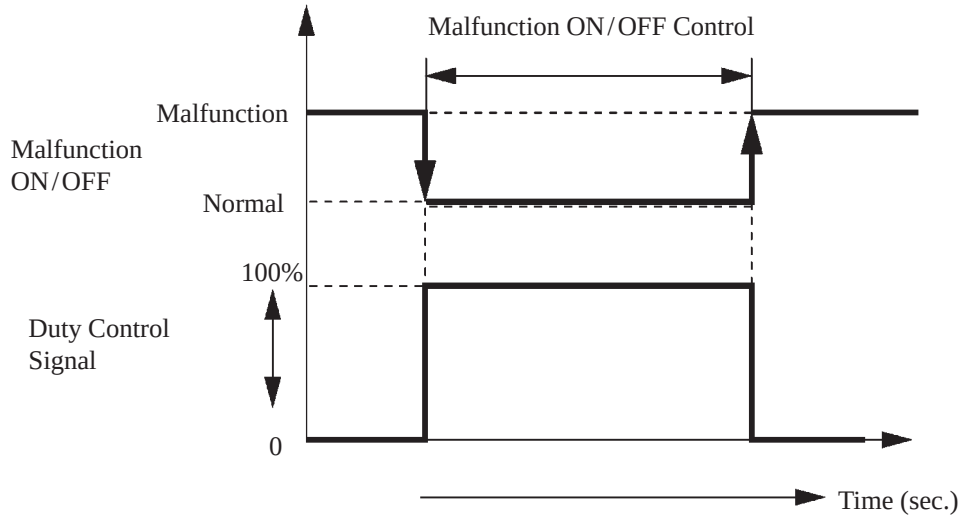

240BE52

Compressor Protect Control

The A/C amplifier controls the compressor operating capacity as shown below in accordance with the engine speed.

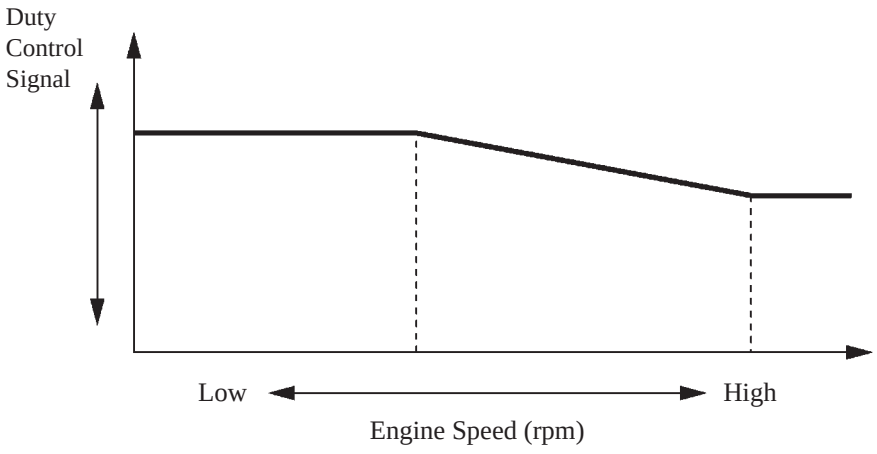

240BE53

4. Self-Diagnosis

- The A/C amplifier has a self-diagnosis function. The self-diagnosis mode, which starts when the switches on the heater control panel are operated as shown below, has three functions: indicator check, sensor check, and actuator check.

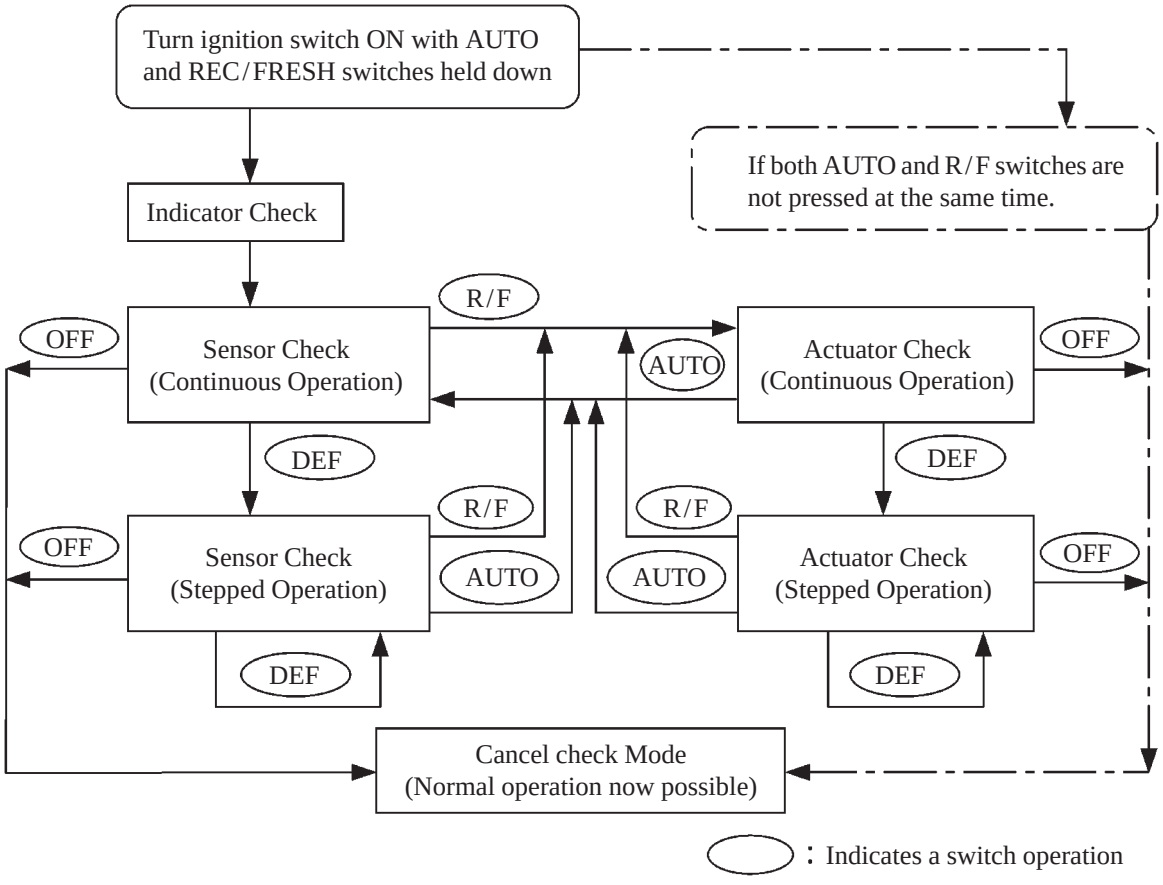

187BE33

▶ Function ◀

Function	Outline
Indicator Check	Checks indicator lights and temperature setting display.
Sensor Check	Checks the past and present malfunctions of the sensors, and clearing the past malfunction data.
Actuator Check	Checks against actuator check pattern if blower motor and servomotors are operating correctly according to signals from A/C amplifier.

- During a sensor check, the DTC appears on the heater control panel. During an actuator check, a step code, which indicates the operation of the actuators (servomotors, blower motor, and compressor) appears in the same location.

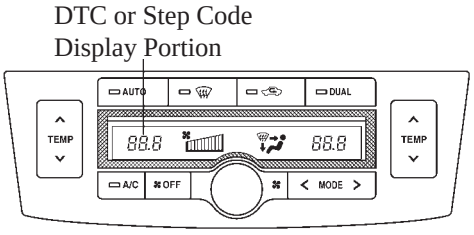

240BE83

- Since diagnostic results are stored directly by electric power from the battery, they are not cleared even when the ignition switch is turned off. For details on the indicator check, sensor check, actuator check function, and clearing DTC of this system, refer to the Avensis Repair Manual (Pub. No. RM1018E).

5. Hot-Gas Power Heater (only for 1CD-FTV Engine)

General

Control		Outline	Auto	Manual
Hot-Gas Heater Control	Hot-Gas Operation Judgment	The A/C amplifier operates the hot-gas heater in accordance with the signals from the power heater switch, blower switch, ambient temperature sensor, water temperature sensor, MAX HOT, and FRESH/RECIRC switch. For details, see page BE-69.	○	○
	Ambient Temp. Sensor Judgment	The A/C amplifier turns the hot-gas heater ON/OFF in accordance with the signals from the ambient temperature sensor. For details, see page BE-70.	○	○
	Refrigerant Pressure Judgment	The A/C amplifier turns the hot-gas heater ON/OFF in accordance with the refrigerant pressure, in order to protect the cycle. ● The hot-gas heater turns OFF when the pressure is above 2.4 MPa, turns back ON when the ignition switch is turned OFF, and resumes operating if the pressure is below 2.4 MPa.	○	○
	Evaporator Temp. Sensor Judgment	The A/C amplifier turns the hot-gas heater ON/OFF in accordance with the evaporator temperature, in order to protect the cycle.	○	○
	Prevent from Frosting Windshield	When the operation is switched from A/C to heater, the moisture that has accumulated on the evaporator vaporizes and fogs the windshield. To prevent this from occurring, this function estimates the windshield temperature based on the ambient temperature and the water temperature, and compares it to the target air outlet temperature. The hot-gas heater turns OFF when the windshield temperature is lower than the target air outlet temperature.	○	○
	Refrigerant Shortage Judgment	**During 60 seconds of hot-gas operation:** ● The hot-gas heater turns OFF when a shortage of refrigerant is determined from the ambient temperature and the refrigerant pressure.	○	○
	Refrigerant Circulation Control	When the hot-gas heater is started and at 30 minute intervals thereafter, the A/C amplifier momentarily switches operation to the A/C cycle in order to circulate the oil that has accumulated in the condenser and the refrigerant. This control is effected to protect the compressor.	○	○
	Heater Panel Switch Control	**A/C Switch Control:** ● When the ignition switch is turned from OFF to ON while the A/C switch remains ON, the A/C amplifier automatically turns OFF the A/C switch if the room temperature is below 10°C (50°F) or below. This control is effected to ensure the proper operating rate of the hot gas heater.	○	—

(Continued)

Hot-Gas Heater Control	Heater Panel Switch Control	**REC/FRESH Switch Control:** ● When the ignition switch is turned from OFF to ON while the REC/FRESH switch remains at REC, the A/C amplifier automatically turns it FRESH. This control is effected to ensure the proper operating rate of the hot gas heater.	○	○
		DEF Switch Linked Control: ● When the blower switch is turned OFF, and DEF switch is turned ON, the blower motor will turn on in the automatic control.	○	—

Hot-Gas Operation Judgment

Hot-gas operates when all of the following conditions have been met:

- Power heater switch and blower switch is ON
- Ambient temperature is between –30°C (–22°F) and 8°C (46°F).
- Water temperature is or less 70°C (158°F).
- REC/FRESH switch is FRESH.
- Temperature control switch is MAX HOT. However, the driver side temperature control switch is set to MAX HOT, if the right/left independent control of the automatic A/C is in effect.

The hot-gas operation range will be as shown below when the A/C switch is turned ON during a hot-gas operation, because the cycle is being shared.

Power Heater Switch	A/C Switch	Hot-gas Operation	Ambient. Temp.
ON	ON	ON	–28°C (–18°F) –1.5°C (29°F) A/C Operation
		OFF	–30°C (–22°F) 0°C (32°F)
	OFF	ON	–28°C (–18°F) 6°C (43°F)
		OFF	–30°C (–22°F) 8°C (46°F)

240BE97

Ambient Temperature Sensor Judgment

The A/C amplifier turns the hot-gas power heater ON/OFF in accordance with the ambient temperature sensor signal when it determines that the heater is unneeded because the ambient temperature is high, or to protect the compressor at extremely low temperatures.

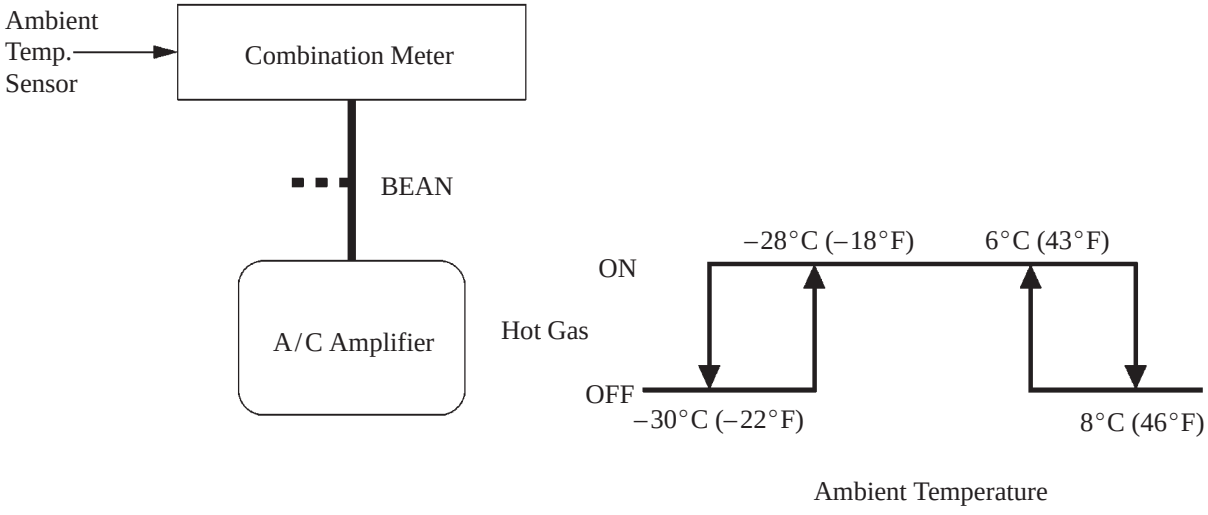

240BE98

Evaporator Temperature Sensor Judgment

To protect the cycle, the A/C amplifier turns the hot-gas power heater ON/OFF in accordance with the evaporator temperature sensor signal.

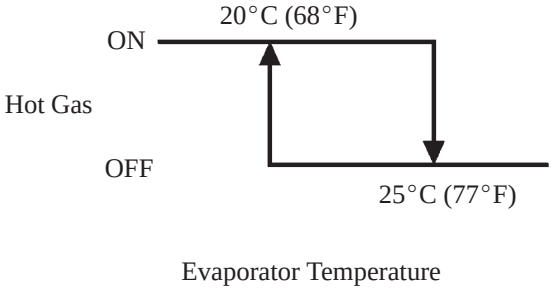

240BE99

6. PTC Heater (only for 1CD-FTV Engine)

The PTC heater is controlled by the A/C amplifier in accordance with the power heater switch, water temperature, ambient temperature, engine speed, temperature setting, and electrical load (alternator power ratio). For example, with water temperature, the number of PTC heater operation varies as shown in the graph below.

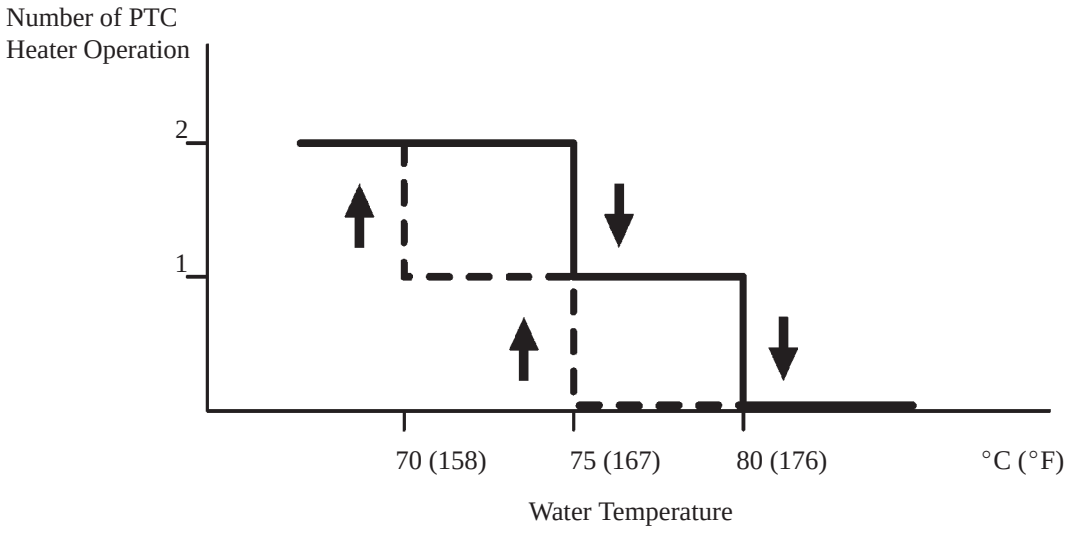

216BE61

■COMBUSTION TYPE POWER HEATER

1. General

This system burns fuel to enhance the heating effect by heating the water between the engine and the heater core. This system, which consists of a combustion type heater assembly, power heater switch, and a fuel pump, operates when the engine is running and the power heater switch is turned ON.

- The combustion type heater assembly consists of an ECU, flame sensor, water temperature sensor, overheating prevention sensor, fan, and fan motor. It cannot be disassembled.
- The ECU in the combustion type heater assembly controls this system in accordance with the signals received from the sensors and switches.

▶ System Diagram ◀

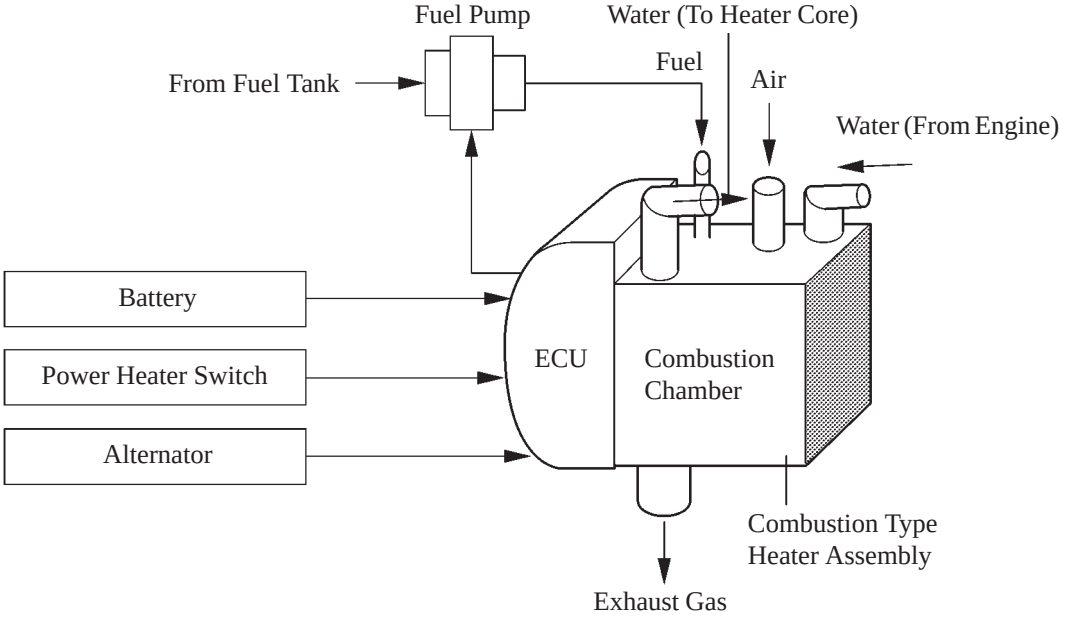

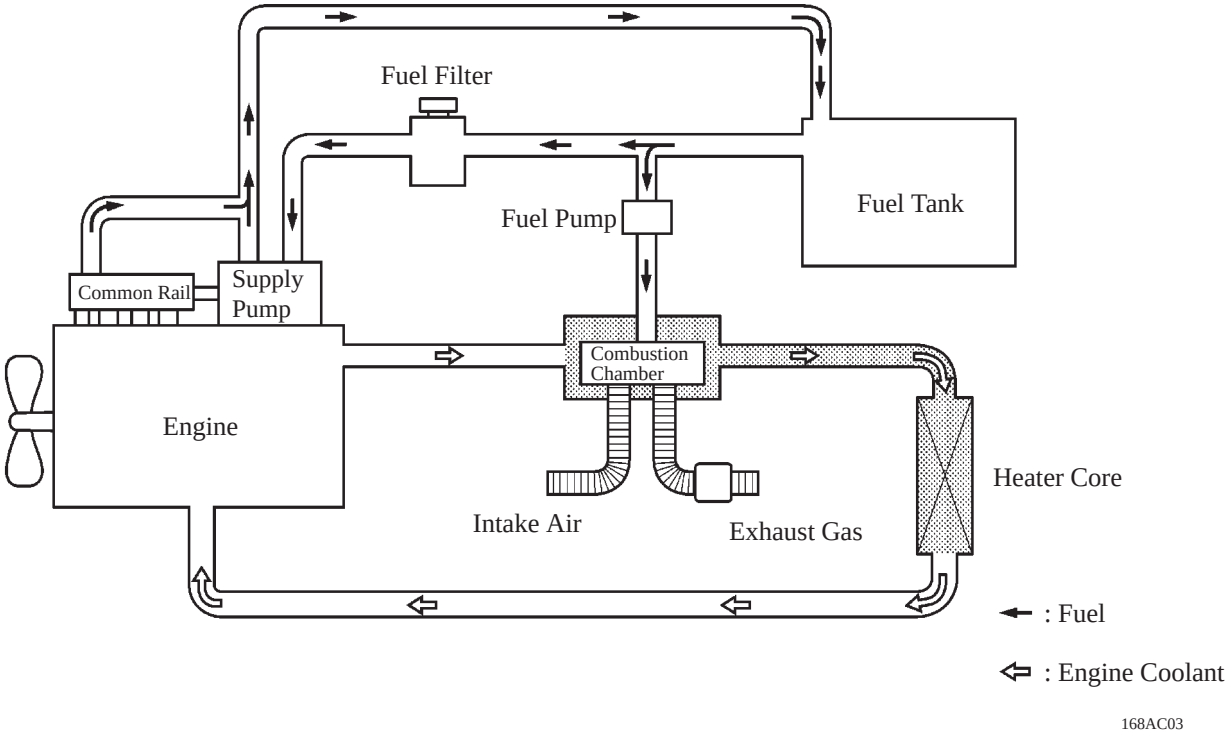

2. Layout of Main Component

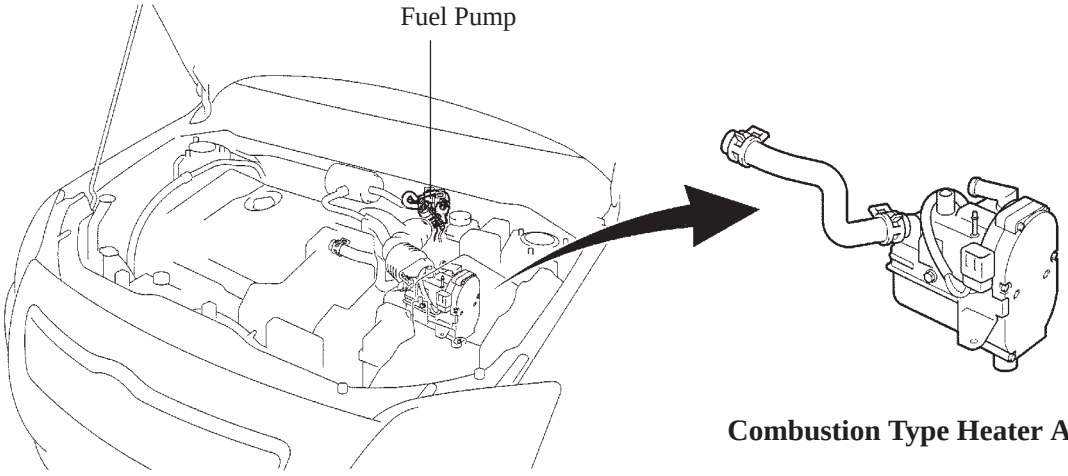

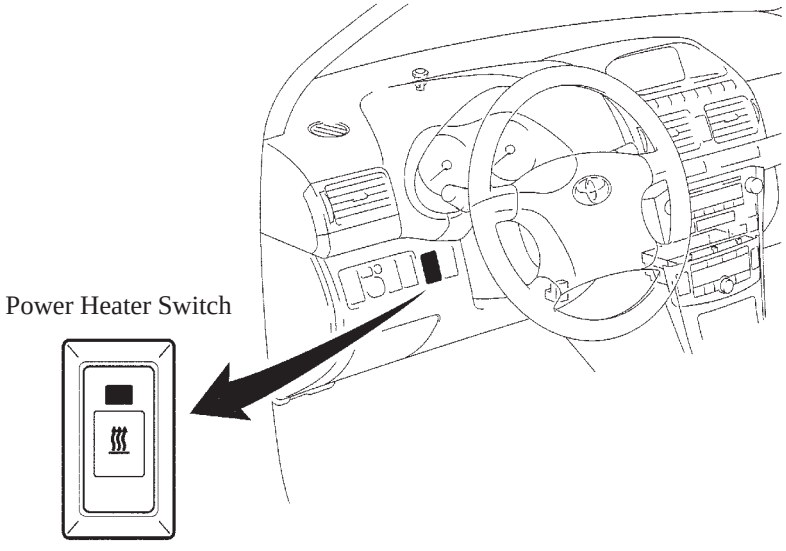

240BE100

3. Diagnosis

If a malfunction occurs in the combustion type heater, it is possible to access the DTC (Diagnostic Trouble Codes) by using a DTC tester that has been designed exclusively for the combustion type heater assembly. For details, see the Avensis Repair Manual (Pub. No. RM1018E).

4. Fail-Safe

For fail-safe, this system stops if an abnormal condition is detected. A description of the control is indicated below.

Fail-Safe	Control
Dry Run	If the engine coolant temperature detected by the water temperature sensor or the overheating prevention sensor exceeds 125°C (289°F), the ECU determines that the heater is operating without engine coolant and automatically stops the system.
Overheating	If the difference in engine coolant temperature detected by the water temperature sensor and the overheating prevention sensor exceeds 15°C (59°F), the ECU determines that the flow volume of the engine coolant is insufficient and automatically stops the system.
Non-ignition or Misfiring Detection	If the temperature of the exhaust gas detected by the flame sensor is low, the ECU determines that a non-ignition or a misfiring condition exists and automatically stop the system.
Open or Short Circuit	If an open or short circuit exists in the sensors or actuators, the ECU automatically stops the system.
Fan & Fan Motor Seizure Detection	If the fan & fan motor becomes seized, the ECU automatically stops the system.

NOTE:

- When the combustion type heater system is turned ON or OFF, some white smoke and a slight odor may be emitted from the exhaust located under the floor. If the combustion type heater is being used under extremely cold conditions. Vapor may be visible from the exhaust. This is normal.
- We recommend not to restart the combustion type heater for 10 minutes after you turn it OFF. Otherwise, a noise may be heard as the heater ignites.
- Do not turn the combustion type heater ON an OFF repeatedly within 5 minute intervals as this can shorten the life of the heater components. If the engine is to be turned ON and OFF repeatedly within short intervals (such as when being used for delivery purposes), turn the power heater switch OFF.

MULTI DISPLAY

■ DESCRIPTION

The new Avensis is provided with a multi display, which shows navigation and trip information. The display has been adopted on the MID TECHNICAL and MID ELEGANT Grades in the Europe Models as optional equipment.

- The multi display, which is retractable, can be opened, closed, and tilted by operating a switch.
- The multi display maintains communication with the navigation ECU, audio head unit, and combination meter by the AVC-LAN.
- The multi display can be operated with a remote control and steering pad switch.
- The navigation screen display supports eight languages: English, German, French, Dutch, Italian, Danish, Swedish, and Spanish.
- A voice recognition function has been adopted in the multi display to enable the operation of the navigation and audio systems. The voice recognition function supports two languages: English and German.

▶ System Diagram ◀

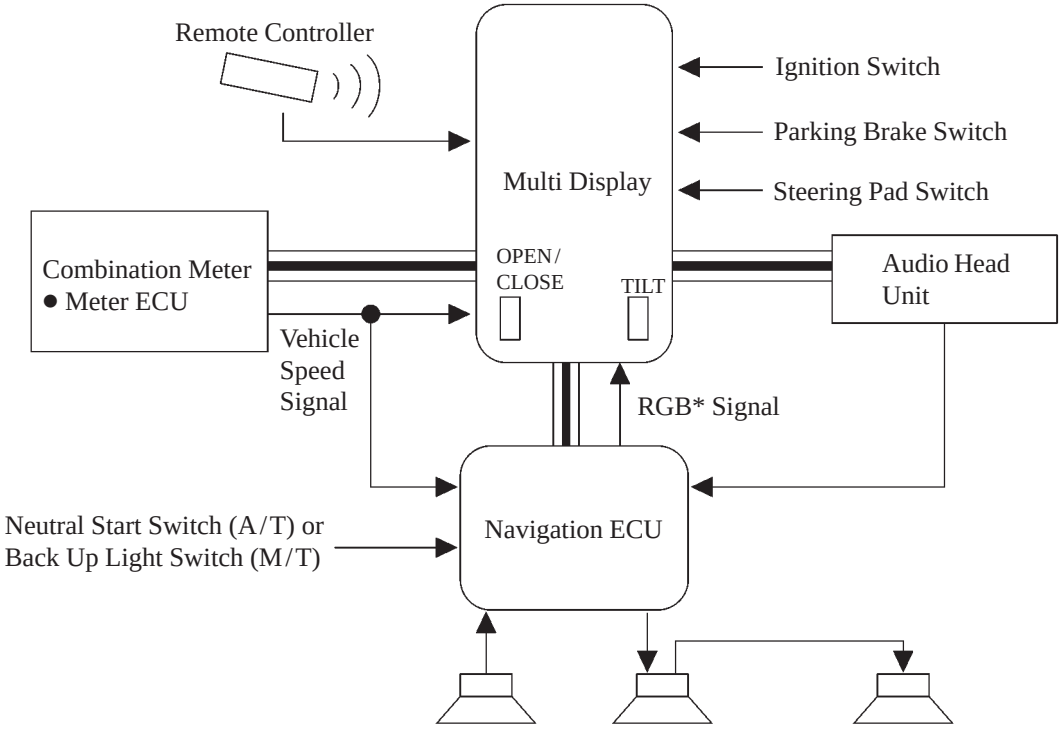

RGB: Red, Green, Blue Color Signal

240BE55

▶ Specification ◀

Multi Display	Display	● 7.0-inch wide LCD (Liquid Crystal Display) ● Maker: Panasonic
	ECU	Maker: DENSO
Navigation ECU		● Maker: DENSO ● Map Data: DVD (Digital Versatile Disc)
Remote Controller		Maker: Panasonic
GPS Antenna		Maker: DENSO
Audio Head Unit		Maker: Panasonic

BE

- Listed below are the other main functions of the multi display.

Function	Outline
Retractable	OPEN/CLOSE and TILT Switches Operation: ● The display opens, closes, or tilts when these switches are operated while the ignition switch is in the ACC or ON position. It tilts at the following angles: 10°, 20°, and 30°. ● Provided that the remote controller is placed on the console box and the ignition switch is in the ACC or ON position, the display opens when any of the following buttons are pressed on the remote controller: MAP/VOICE, MENU, DEST, or INFO. ● If the ignition switch is turned OFF while the display is open, the multi display closes automatically to protect itself from direct sunlight. It opens automatically when the ignition switch is turned again to ACC or ON. ● The display can be set to two closing positions.*
Navigation Screen Display	Through the use of the GPS (Global Positioning System) and map data in a DVD (Digital Versatile Disc), the navigation system analyzes the position of the vehicle and indicates that position on the map that is displayed on this screen.
Trip Information Display	The following pieces of trip information are displayed in accordance with the signals from the combination meter: ● Cruising Range ● Average Fuel Consumption after refueling ● Average Speed ● Instant Consumption ● Driven Distance after starting ● Outside Temp. Display
Maintenance Screen Display	This screen has a function, which informs driver of the time of replace certain parts or components as well as other information shown on the screen.
Adjustment Screen Display	Image quality adjustment screen indication.
Diagnosis Menu Display	This contains the following 3 items: ● Service Check Menu ● Display Check ● Navigation Check

*: Method for Setting the Display Closing Positions
Provided that the multi display is closed and the ignition switch is in the ACC position, press the tilt switch for 5 seconds or longer. This will change the closing position of the display the next time the display is opened or closed.

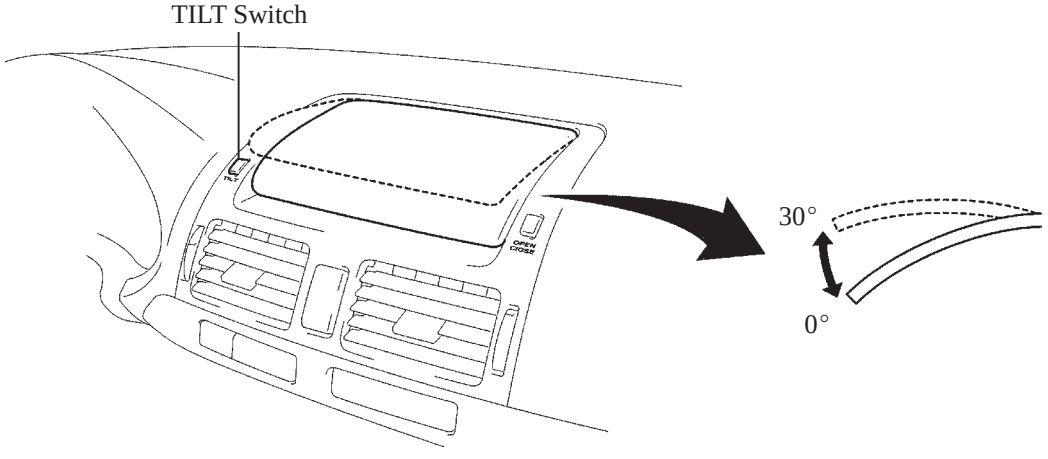

■LAYOUT OF MAIN COMPONENT

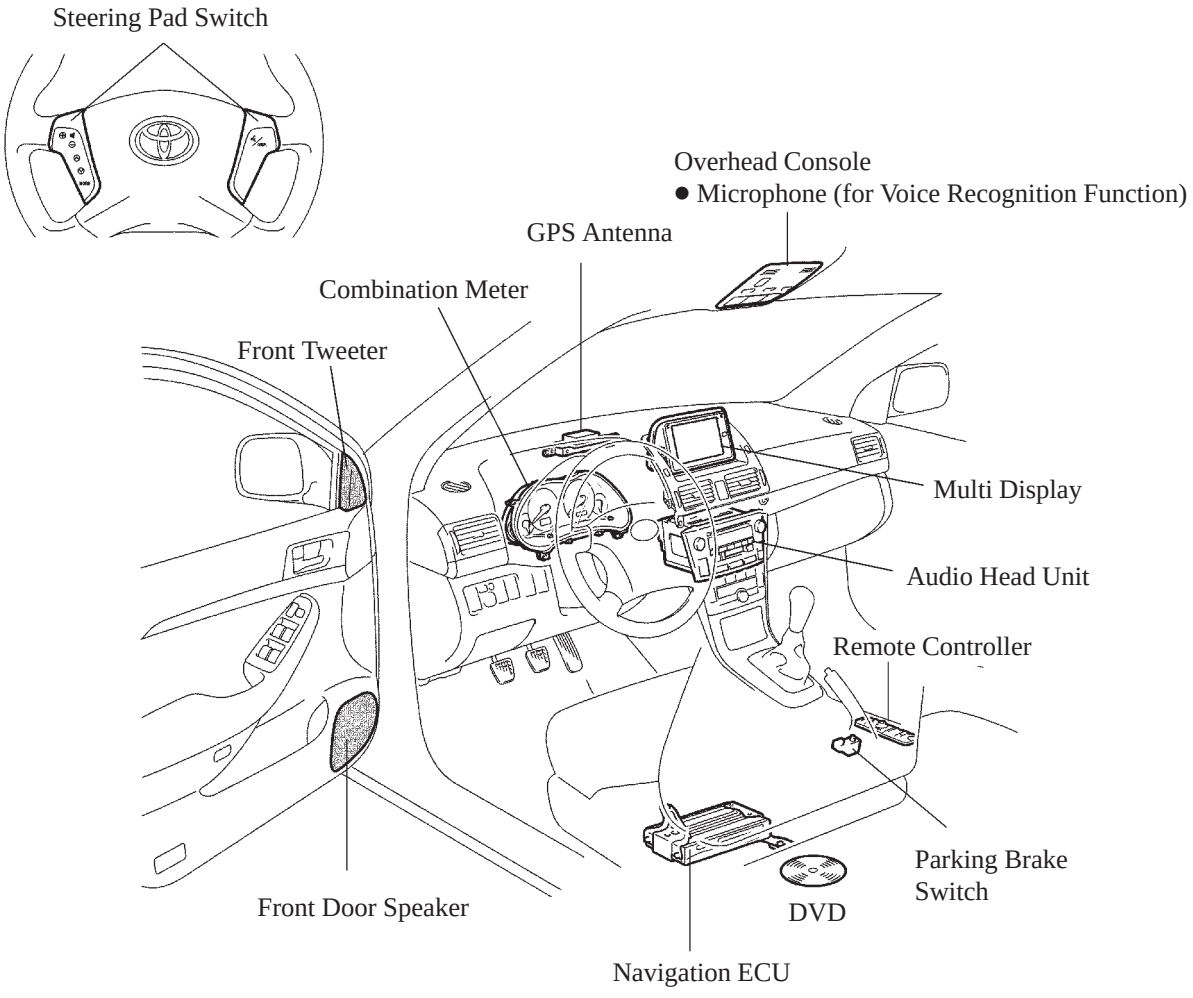

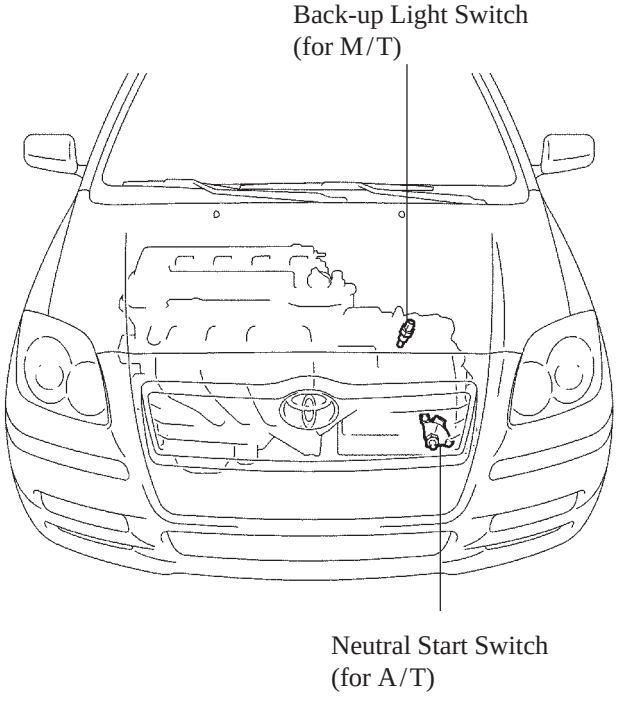

Remote Controller

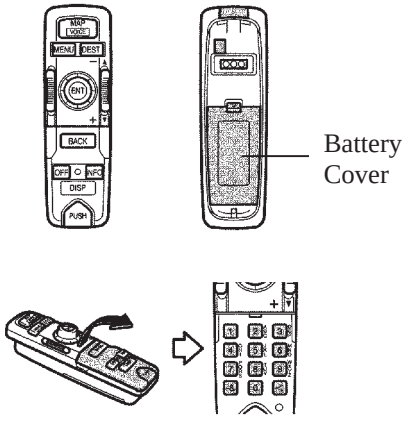

240BE101

BE

■ NAVIGATION SCREEN DISPLAY

This screen has the display functions listed below.

Item		Function
Map Display	On-route Scroll	Scrolls the center of the cursor forward and reverse constantly along the route.
	Heading Up	Displays the map so that the direction of the route progressing head up during route guidance.
	Map Color Change	Automatically changes the map display color by season.
	Front Wide	Displays a map in the direction of travel of the vehicle in an enlarged form. (Heading up only)
	Multi-step Scale Display	Changes and displays the map scale in 13 stages.
	Split-view Display	Displays different modes on a screen that is split into two views.
	Point-of-Interest Display	Displays selected types of marks on the map.
	Taillight-interlocked Map Color Change	Changes the displayed color on the map screen when the taillights are turned ON.
	Street Name Sign Board Display	Displays the street name on the map.
Destination Search	Last Destination Memory	Stored 20 locations of coordinates, names and times the have been set as destinations in the past.
	Hybrid Points-of-interest Search	Narrows the search by names of the point-of-interest, category, and areas.
	Points-of-interest Pinpoint Display	Pinpoints and displays the position of the point-of-interest.
	House Number Search	Searches for a house number.
	Preset Destination	Sets a pre-registered point as a destination point while driving.
	Nearest Point-of-interest Search List Display	Searches nearest points-of-interest and displays a list.
	Intersection Search	By specifying tow streets, the point at which they intersection is set as the destination point.
	Motorway Entrance/ Exit Search	Searches for the destination by the name of the street that connects to a motorway entrance/exit.
Route Search	Multiple Destination Setting	Sets multiple destinations. It can also rearrange the sequence of the destinations.
	Route Search	Searches for three routes.
	Search Condition Designation	Searches for the quick, short, and alternative.
	Regulated Road Consideration	Performs search while considering regulated roads.
	Avoidance Area	Avoids a designated area and searches a route.

(Continued)

Item		Function
Guidance	Destination Direction Arrow Display	Function to display the direction from the current position to the destination in case of being off the route during the guidance.
	Off-Route Arrow Display	Function to display the route ahead on the route guidance
	Rotary Guidance	To guidance with a special voice phrase in the rotary.
	Right or Left Turn Guidance	Voice guidance to instruct the direction of travel to be taken.
	Motorway Direction of Travel Guidance	Voice guidance to instruct the direction of travel to take on the motorway.
	Distance Display Destination	Displays the distance from the present location to the destination.
	Motorway Branch Type Specimen Guidance	Type specimen for guidance to a motorway branch.
	Intersection Map Display	Intersection map display when approaching an intersection.
	Turn List Display	Displays a turn list on the right side of the two-screen display when approaching an intersection.
Others	Voice Recognition	● Recognizes the voice of the driver, follows the driver's instructions, and operates the navigation and audio systems. ● It recognizes voice commands in two languages: English and German.
	Language Selector	The language of the text displayed on the navigation screen and of the voice guidance can be selected from 8 languages: English, Germany, French, Dutch, Italian, Danish, Swedish, and Spanish.
	Numeric Keypad Input	Supports the numeric keypad input of the remote controller.
	Calendar	Enables calendar display until 2020 and memo registration.

■ TRIP INFORMATION DISPLAY

The trip information can display the shown on the right. This screen has the display functions listed below.

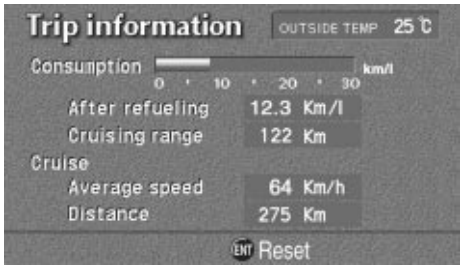

240BE102

Item	Outline
Outside Temp. Display	Displays the outside temp. that is output by the combination meter (Meter ECU).
Momentary Fuel Consumption	● Displays the value that has been calculated by the combination meter (Meter ECU), which is based on the driven distance and fuel consumption volume, provided that the ignition switch is turned ON. ● The display updates every 2 seconds.
Average Fuel Consumption	● Display the value that has been calculated by the combination meter (Meter ECU), which is based on the driven distance and the fuel consumption volume. ● The display updates every 10 seconds.
Cruising Range	● Displays the value that has been calculated by the combination meter (Meter ECU) which based on the fuel consumption data that the combination meter (Meter ECU) continuously monitors and stores in its memory and the residual fuel volume data, provided that the ignition switch is turned ON. ● The display updates every 1 km or 1 mile.
Average Speed	● Displays the average speed, which is calculated by the combination meter (Meter ECU) based on the length of time and the driven distance after the ignition switch has been turned ON or the RESET button has been pressed 0.8 seconds or longer. ● The display update every 10 seconds.
Driven Distance	● Displays the driven distance that is output by the combination meter (Meter ECU) after the ignition switch has been turned ON or the RESET button has been pressed 0.8 seconds or longer. ● The display updates every 1 km or 1 mile.

■DIAGNOSIS SCREEN DISPLAY

The multi display is equipped with a self-diagnosis system and can display the diagnosis menus shown on the right.

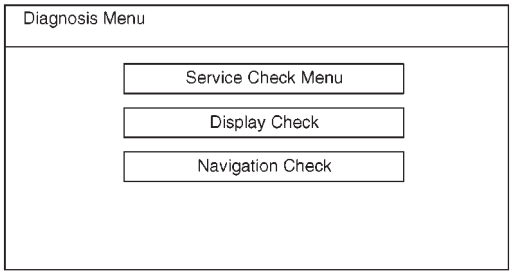

187BE37

Service Tip

The diagnosis menu screen can be displayed according to the procedure given below.

1) Engine Running.
2) Vehicle speed should be 0 km/h (0 mph).
3) Apply the parking brake.
4) While pressing "INFO" switch in the remote controller, by turning the light control switch to OFF, TAIL, OFF, TAIL, OFF, TAIL, and OFF the diagnosis screen display is start up.
5) Turn the ignition switch from ACC to OFF to finish the display.

For details, refer to the Avensis Repair Manual (Pub. No. RM1018E).

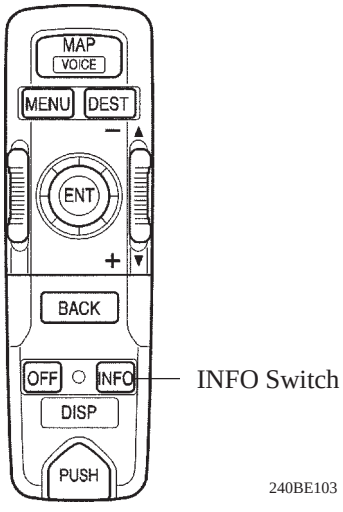

240BE103

BE

MULTI-INFORMATION DISPLAY

■ DISCRIPTION

The multi-information display is optional equipment on the ENTRY grade model for Europe and standard equipment on other grades. It is unavailable for General Countries.

- The multi-information display shows five types of trip information that have been calculated by the combination meter (Meter ECU). Communication between the multi-information display and the combination meter (Meter ECU) is established by the AVC-LAN (Audio Visual Communication – Local Area Network).
- For ease of use, the display functions can be changed by operating a steering pad switch.

▶ System Diagram ◀

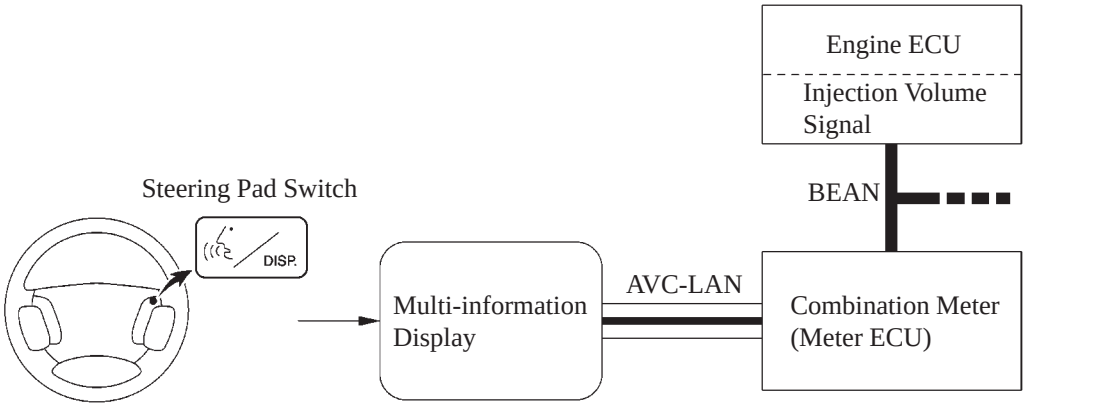

240BE56

- This screen has the display functions listed below.

Item	Outline
Cruising Range	● Displays the value that has been calculated by the combination meter (Meter ECU) which based on the fuel consumption data that the combination meter (Meter ECU) continuously monitors and stores in its memory and the residual fuel volume data, provided that the ignition switch is turned ON. ● The display updates every 1 km or 1 mile.
Average Fuel Consumption	● Display the value that has been calculated by the combination meter (Meter ECU), which is based on the driven distance and the fuel consumption volume. ● The display updates every 10 seconds.
Average Vehicle Speed	● Displays the average vehicle speed, which is calculated by the combination meter (Meter ECU) based on the length of time and the driven distance after the ignition switch has been turned ON or the RESET button has been pressed 0.8 seconds or longer. ● The display update every 10 seconds.
Momentary Fuel Consumption	● Displays the value that has been calculated by the combination meter (Meter ECU), which is based on the driven distance and fuel consumption volume, provided that the ignition switch is turned ON. ● The display updates every 2 seconds.
Driven Distance	● Displays the driven distance that is output by the combination meter (Meter ECU) after the ignition switch has been turned ON or the RESET button has been pressed 0.8 seconds or longer. ● The display updates every 1 km or 1 mile.

■FUNCTION OF COMPONENT

▶ Multi-information Display ◀

▶ Steering Pad Switch ◀

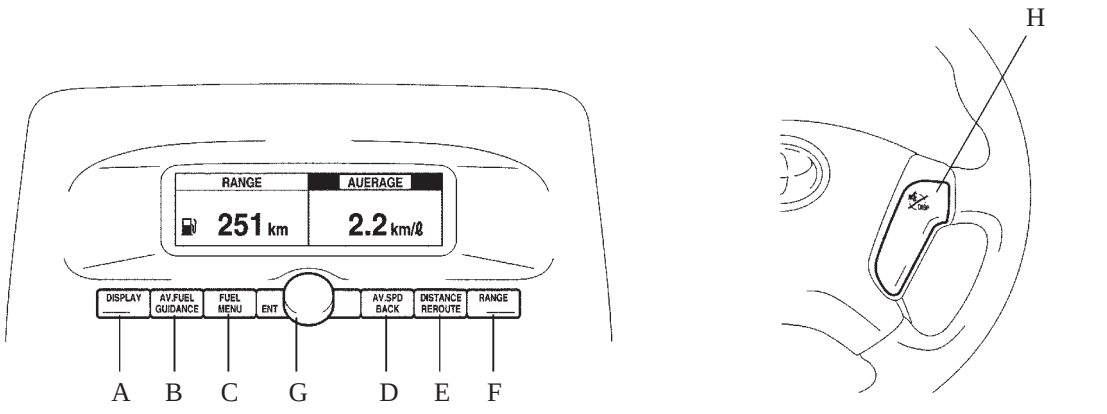

240BE104

Button	Operation	Function
A	Push	Switch operational side. 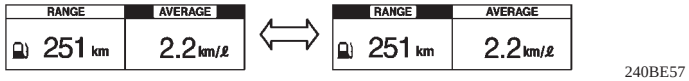 240BE57
	Keep to Push	Switch screen positions.  240BE58
B	Push	Switch over to AVERAGE FUEL COMSUMPTION mode for operational screen.
	Keep to Push	No function
C	Push	Switch over to MOMENTARY FUEL COMSUMPTION mode for operational screen.
	Keep to Push	No function
D	Push	Switch over to AVERAGE VEHICLE SPEED mode for operational screen.
	Keep to Push	Reset AVERAGE VEHICLE SPEED.
E	Push	Switch over to CRUISING DISTANCE mode for operational screen.
	Keep to Push	Reset CRUISING DISTANCE.
F	Push	Switch over to CRUISING RANGE mode for operational screen.
	Keep to Push	No function

(Continued)

Button	Operation	Function
G	Push	Switch over to trip information unit setting mode. ● When switch is pushed, the unit on display blinks. 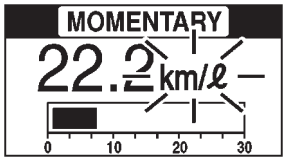 240BE59 Fix the unit and turn back from trip information unit setting mode. ● When switch is pushed again, the unit is fixed and trip information unit setting mode is finished. It works same as above when other switch is pushed or no operation state lasts for longer than 6 seconds.
	Rotate	Change the unit on trip information unit setting mode. ● When switch is rotated, the unit changes cyclically. ● The unit on the other display changes at the same time. 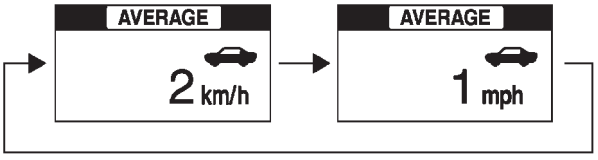 240BE60
	Keep to Push	Display OFF
H	Push	Switch over to the other indication cyclically as followings. 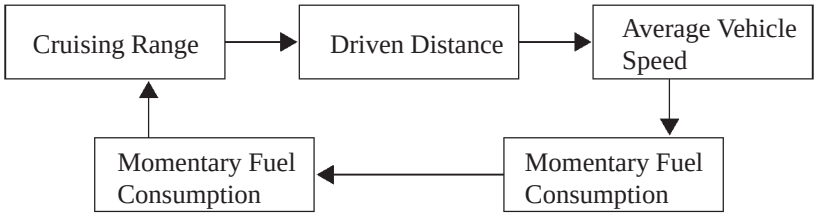 240BE61
	Keep to Push	In the case of DRIVEN DISTANCE mode or AVERAGE VEHICLE SPEED mode, reset the each information.

Push: 0.03 – 1.7 seconds/Keep to Push: Longer than 1.7 seconds

AUDIO SYSTEM

■ DESCRIPTION

The radio, CD, cassette, 8 speakers, and the steering pad switch are standard equipment on the model for Europe. The radio, CD, cassette, and 8 speakers are standard equipment on the models for General Countries.

▶ System Diagram ◀

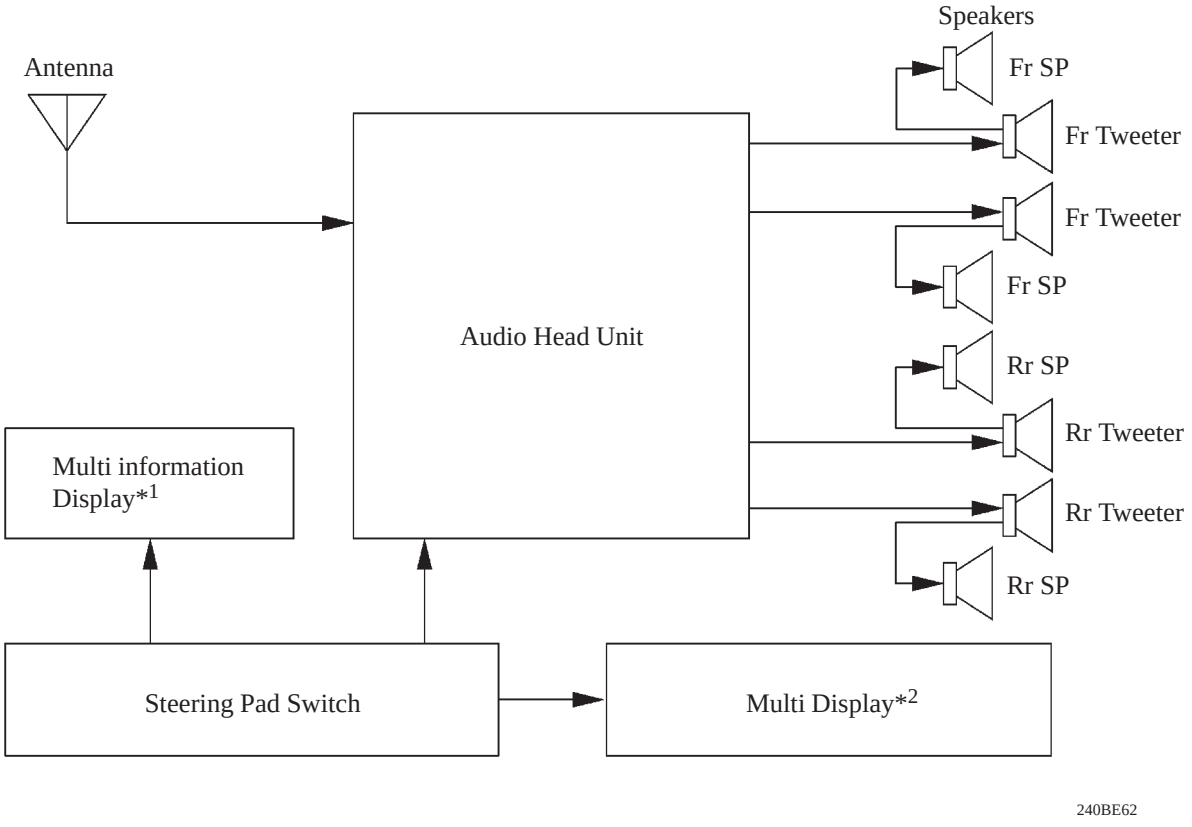

*1: with Multi-information Display
*2: with Multi Display

■ STEERING PAD SWITCH

Listed below are the other main functions of the steering pad switch.

Function			Short Push	Long Push
Steering Pad Switch (LH)	VOL		Volume up, down	—
	SEEK	AM/FM	Seek up, down	CH up, down
		TAPE	Search FF, REW	FF, REW
		CD	Track up, down	—
	MODE		Switching AM/FM, TAPE, CD	OFF
Steering Pad Switch (RH)			• Voice recognition ON, OFF (with Multi Display) • Switching multi-information display (with Multi-information Display)	—

BE

POWER WINDOW SYSTEM

■ DESCRIPTION

- The power window motor of the new Avensis contains an ECU and two Hall ICs. The ECU effects power window control, and the two Hall ICs detect the position and the direction of the motor. However, the key-off operation control is controlled by the integration relay (Body ECU).
- The new Avensis has a power window system with the following equipment:

Destination		Europe		General Countries
Grade		ENTRY	Others	—
Power Window	Front Doors	STD	—	STD
	All Doors	OPT	STD	OPT

▶ System Diagram ◀

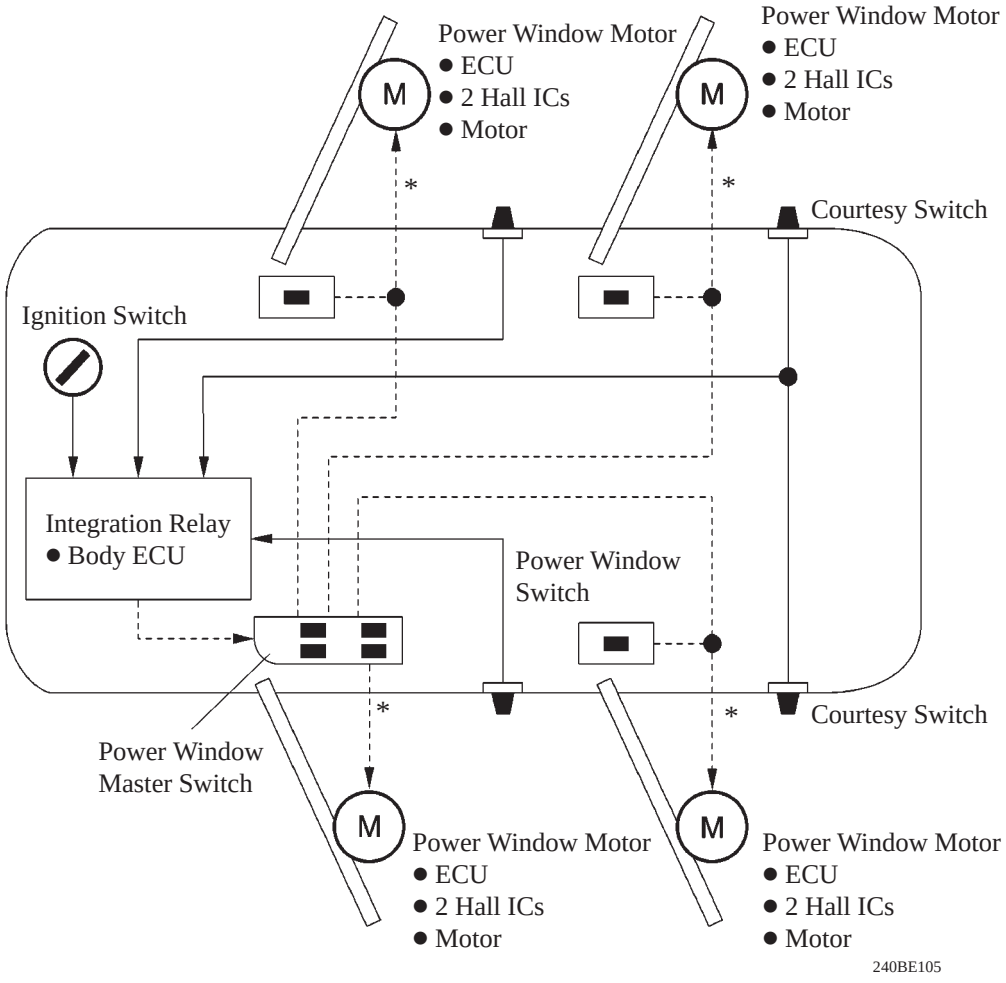

*: AUTO, UP, or DOWN Signals

- The power window system has the following function:

Function	Outline
Manual up-and-down	This function causes the window to open or close while the power window switch is being pulled halfway up or pushed halfway down. The window stops as soon as the switch is released.
All door one-touch auto up-and-down	The "all door one-touch auto up-and-down function" enables the window of any door to be fully opened or closed at a touch of the power window switch on each door.
Jam Protection	A "jam protection function" automatically stops the power window and moves it downward [approx. 200 mm (7.9 in.)] if a foreign object gets jammed in the all door windows during one-touch auto-up operation.
Remote Control	The up-and-down operations of the front passenger door window and the rear door windows can be controlled by operating the power window master switch.
Key-off operation	The "key-off operation function" makes it possible to operate the power window for approx. 43 seconds after the ignition switch is turned to the ACC or LOCK position, if the front doors are not opened.

■POWER WINDOW MOTOR

This power window motor contains an ECU, two Hall ICs, and a motor. When an AUTO, UP, or DOWN signal is input by the power window master switch or a power window switch, the ECU causes the motor to actuate. The two Hall ICs are installed in the worm gear portion.

- The Hall IC converts the changes in the magnetic flux that occur through the rotation of the worm gear into pulse signals and outputs them to the ECU.

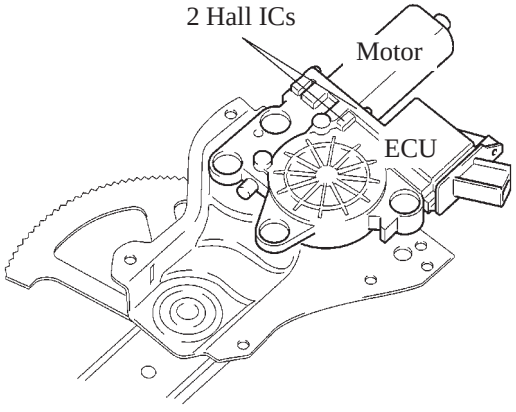

240BE106

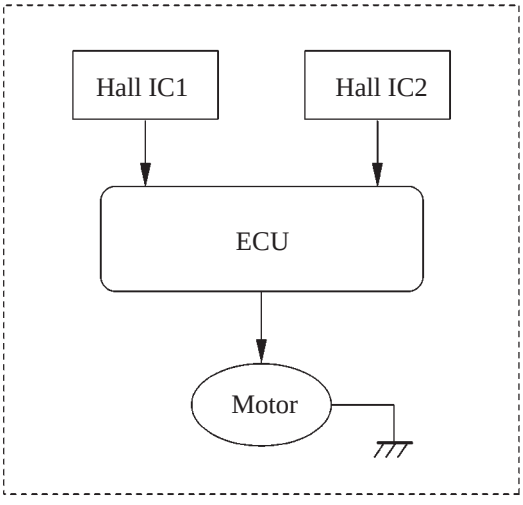

Power Window Motor Circuit

240BE107

- The power window system has the following function:

Function	Outline
Manual up-and-down	This function causes the window to open or close while the power window switch is being pulled halfway up or pushed halfway down. The window stops as soon as the switch is released.
All door one-touch auto up-and-down	The "all door one-touch auto up-and-down function" enables the window of any door to be fully opened or closed at a touch of the power window switch on each door.
Jam Protection	A "jam protection function" automatically stops the power window and moves it downward [approx. 200 mm (7.9 in.)] if a foreign object gets jammed in the all door windows during one-touch auto-up operation.
Remote Control	The up-and-down operations of the front passenger door window and the rear door windows can be controlled by operating the power window master switch.
Key-off operation	The "key-off operation function" makes it possible to operate the power window for approx. 43 seconds after the ignition switch is turned to the ACC or LOCK position, if the front doors are not opened.

■POWER WINDOW MOTOR

This power window motor contains an ECU, two Hall ICs, and a motor. When an AUTO, UP, or DOWN signal is input by the power window master switch or a power window switch, the ECU causes the motor to actuate. The two Hall ICs are installed in the worm gear portion.

- The Hall IC converts the changes in the magnetic flux that occur through the rotation of the worm gear into pulse signals and outputs them to the ECU.

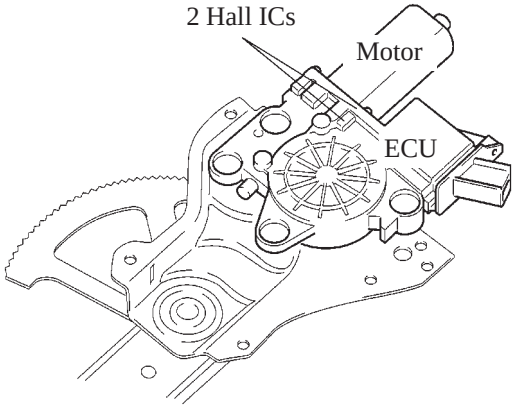

240BE106

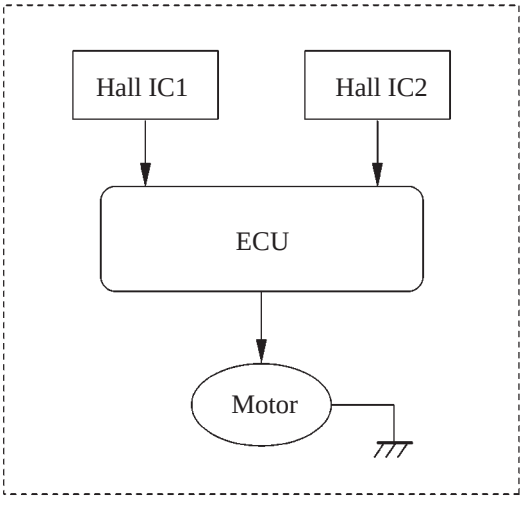

Power Window Motor Circuit

240BE107

- To control the jam protection function, the ECU determines the amount of movement and the jamming of the window from the pulse signals from the Hall IC1, and the moving direction of the window from the phase difference between the pulses from the Hall IC1 and Hall IC2.

▶ Judgment of Amount of Movement and Jamming ◀

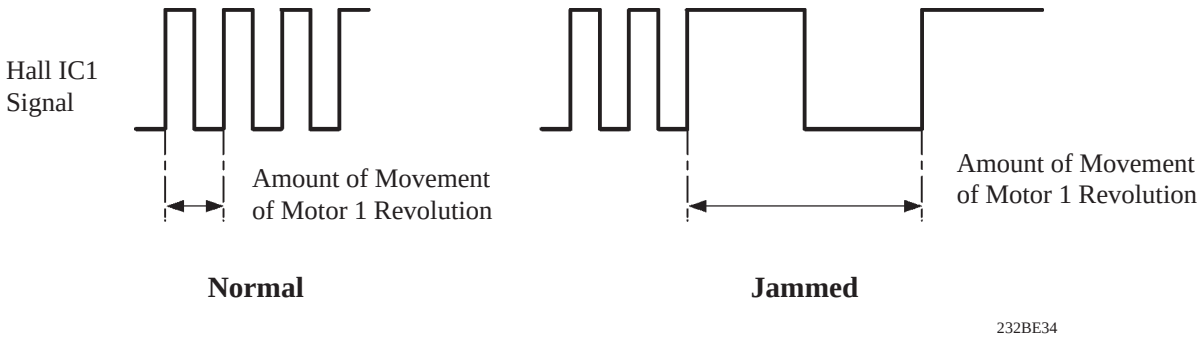

▶ Judgment of Moving Direction ◀

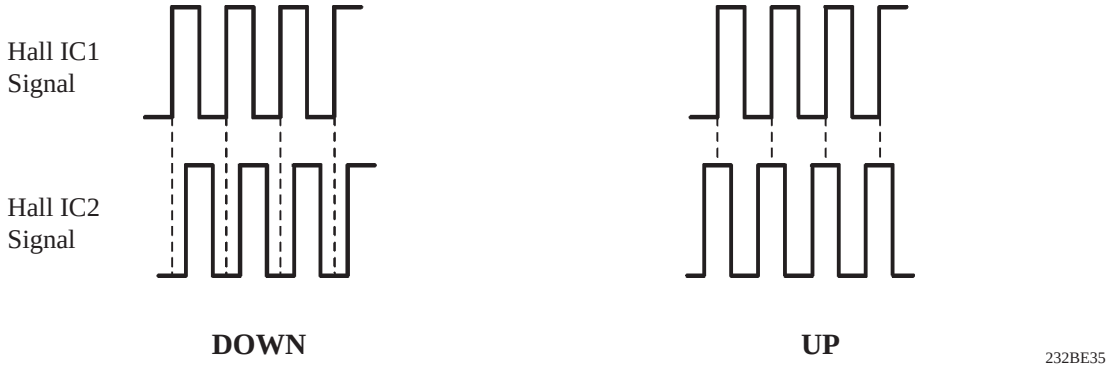

Service Tip

The any ECU memorizes the initial position of the any door window. During power window operation, this data will be lost if a battery terminal, fuse, or power window motor connector is disconnected, allowing only a manual operation. Therefore, after reconnecting these, initialize the system by performing the steps described below.

1) Hold the power window master switch or power window switch UP.
2) By keeping the switch pressed UP for approximately 1 second after the any door window is fully closed, the any ECU memorizes the initial position of the any door window.

The inspection procedure has been changed in accordance with the changes in the power window motor circuit. For details, refer to Avensis Repair Manual (Pub. No. RM1018E).

DOOR LOCK SYSTEM

■ DESCRIPTION

- This system is controlled by the integration relay (Body ECU). The integration relay (Body ECU) outputs signals to the respective door lock motors.
- For improved theft deterrent performance, a double locking system is standard equipment on the RHD model in Europe. Double locking system is controlled by the integration relay (Body ECU).

▶ System Diagram ◀

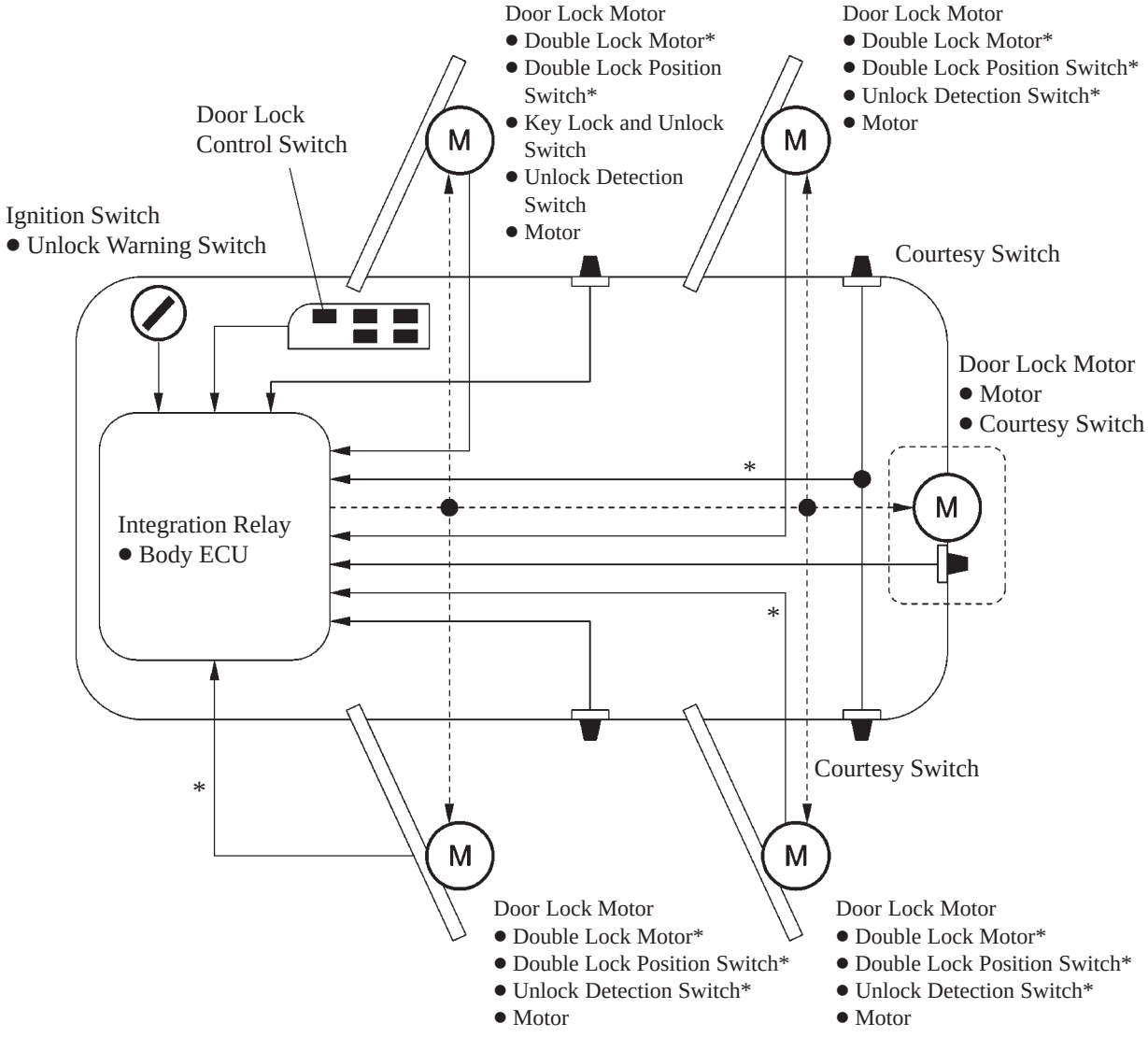

RHD Model

240BE108

*: with Double Locking System

- The door lock system has the following function:

Function	Outline
Manual Lock and Unlock	This function can lock or unlock all doors by the door lock control switch operation.
Key-linked Lock and Unlock*	This function, which is linked with the driver door's key cylinder, can lock or unlock all the doors when a lock or unlock operation is effected.
Key Confine Prevention	When the key is inserted in the ignition key cylinder and the driver's door is open, an attempt to lock will cause all the doors to unlock.
Manual Unlock Prohibition	When a lock operation is effected through wireless door lock remote control or key-linked operation, this function prohibits the door lock control switch from becoming unlocked.
Double Locking System	● The double locking system also prevents the doors from being opened through the operation of the inside door knobs. Thus, the doors cannot be opened either from the inside or the outside of the vehicle. ● To lock the doors with this system, pressing the transmitter's LOCK button, then pressing it again within 5 seconds activates the double locking system. ● However, as an emergency unlocking maneuver, only the driver's door can be unlocked with a key. **CAUTION:** Never activate the double locking system when there are people in the vehicle because the doors cannot be opened from the inside of the vehicle. If locking the doors by accident, press "UNLOCK" button of the transmitter.

*: On the models with the double locking system, when the double locking system is operating, all door can be locked through the key–linked function, but they cannot be unlocked. Only the driver's door can be unlocked.

ELECTRONIC LUGGAGE/BACK DOOR OUTSIDE HANDLE SYSTEM

■ DESCRIPTION

This system is provided with a switch on the luggage (for Sedan)/back door (for Liftback and Wagon) outside handle to unlock the luggage or back door electrically.

- A key cylinder has been provided on the sedan model in case the system does not operate due to a discharged battery or other malfunctions.
- On the Liftback and Wagon models, the back door does not have a key cylinder. Instead, it has an emergency lever, which can be operated if the system is disabled due to a discharged battery or other malfunction.
- This system is controlled by the integration relay (Body ECU).
- This system operates when all of the following conditions have been met:

Operation Condition	● Luggage/back door open switch is ON. ● Vehicle speed is 5 km/h less than. ● When the unlock signal has been output from transmitter, door lock control switch, and key operations and this signal has been input into the integration relay (Body ECU).

▶ System Diagram ◀

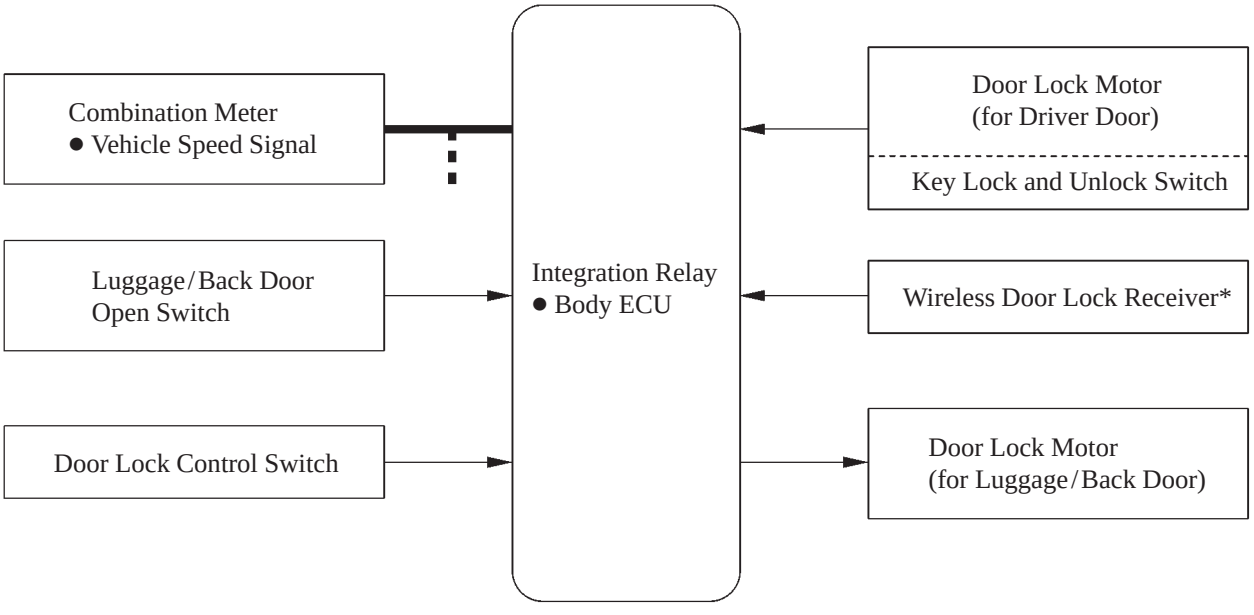

240BE147

*: Only for Europe Model

BE

■LAYOUT OF MAIN COMPONENT

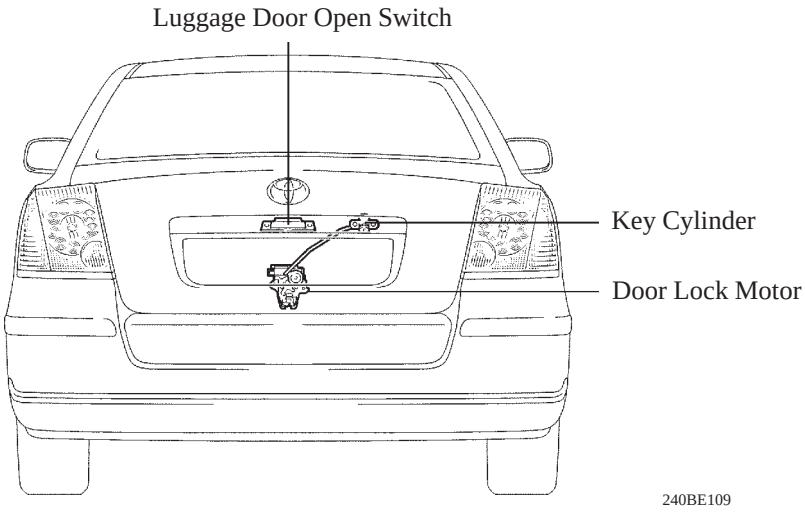

Sedan Model

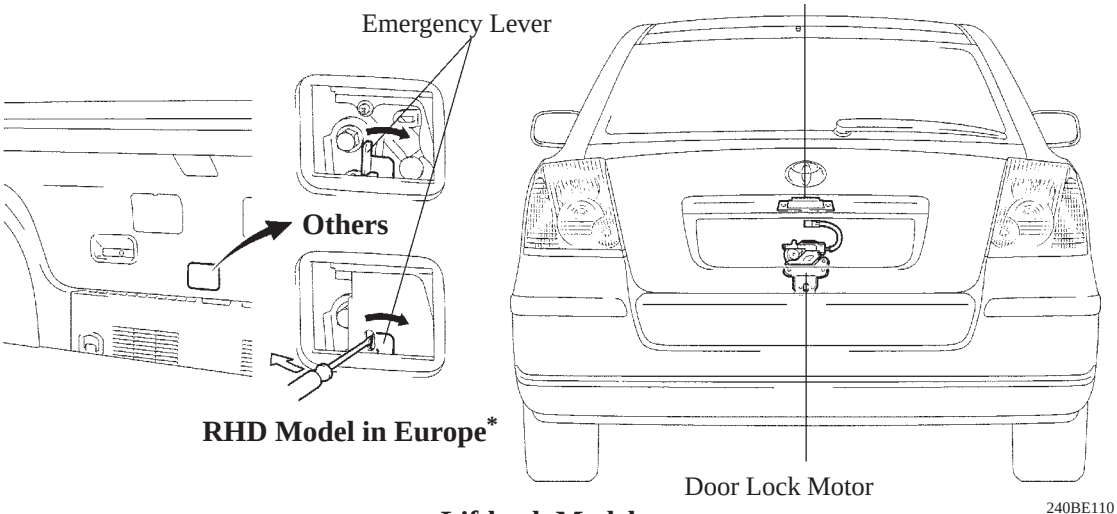

RHD Model in Europe*

Liftback Model

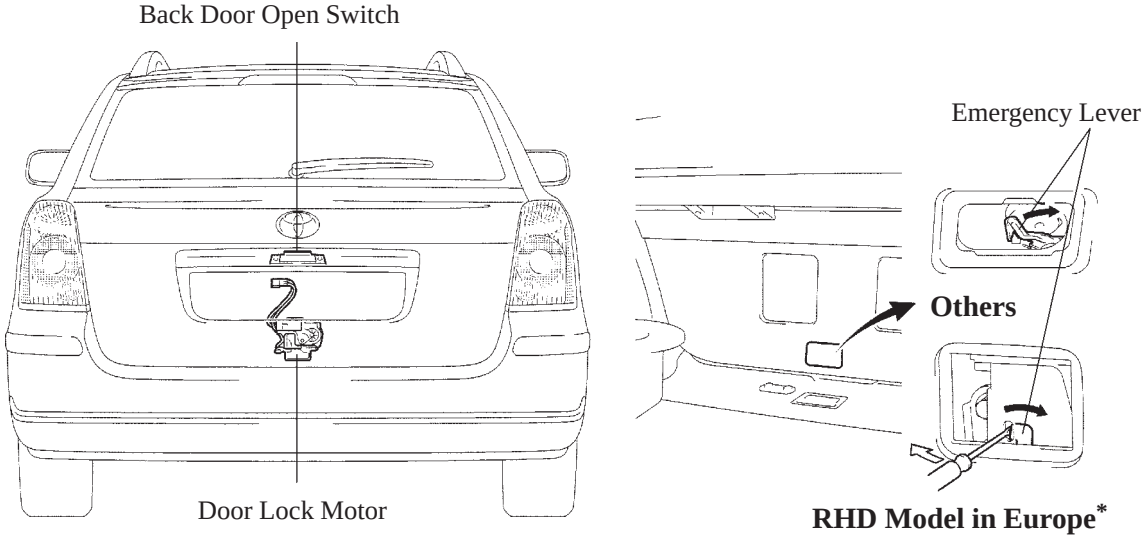

RHD Model in Europe*

Wagon Model

*: Insert a flat–bladed screwdriver or equivalent into the cover hole and push the emergency lever to the right side.

WIRELESS DOOR LOCK REMOTE CONTROL SYSTEM

■ DESCRIPTION

This system is a convenient system for locking and unlocking all doors, at a distance. This system is standard equipment on Europe model.
The following changes and features have been made from the previous model:

- In this system, the wireless door lock receiver performs the code identification process and the integration relay (Body ECU) effects the door lock control. Serial data link is provided for communication between the wireless door control receiver and integration relay (Body ECU).
- The new Avensis uses a key-integrated, 3-button transmitter in which an unlock button has been added to operate the luggage compartment door (Sedan) or the back door (Liftback and Wagon).

▶ System Diagram ◀

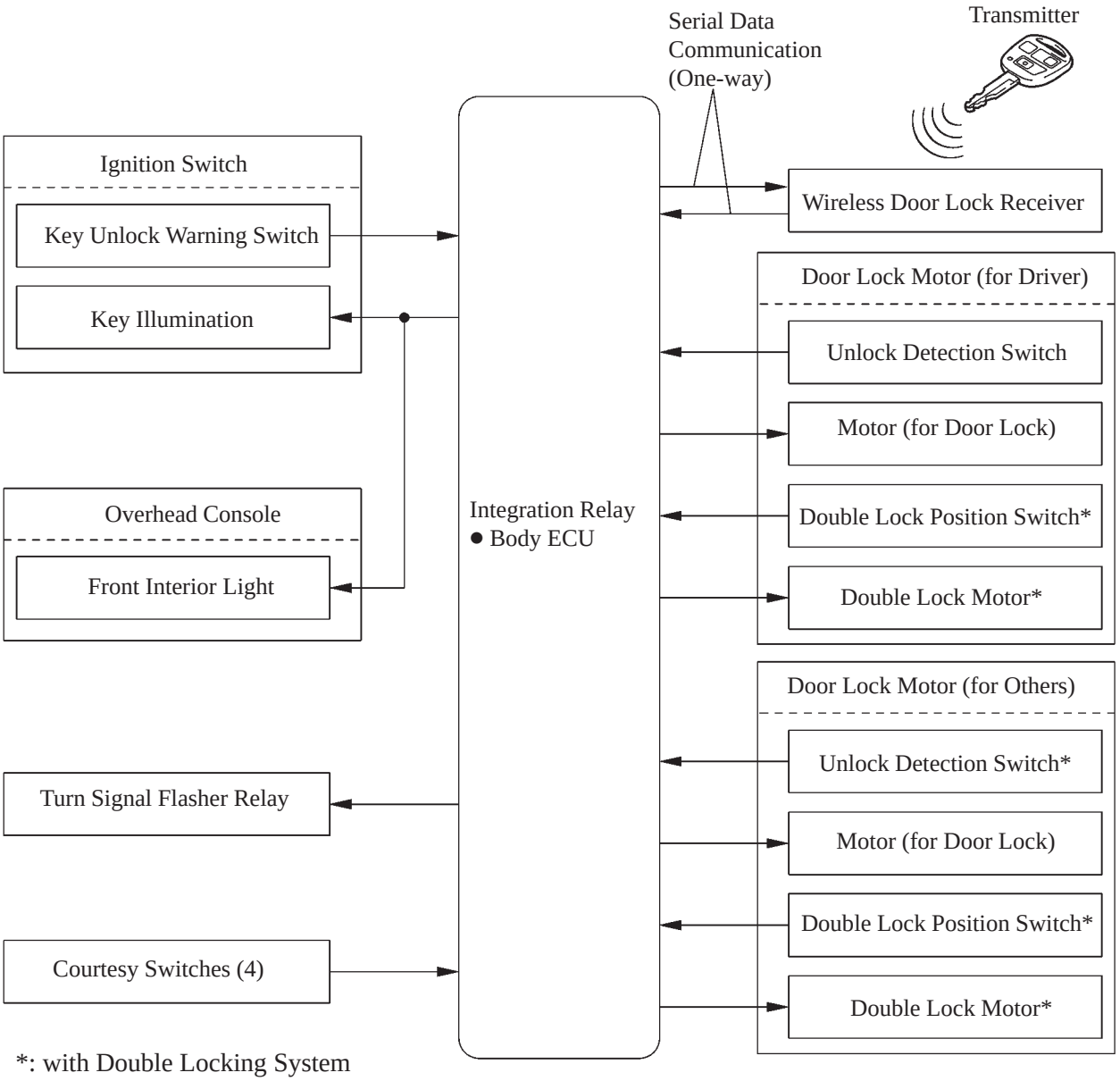

*: with Double Locking System

240BE112

BE

■LAYOUT OF MAIN COMPONENT

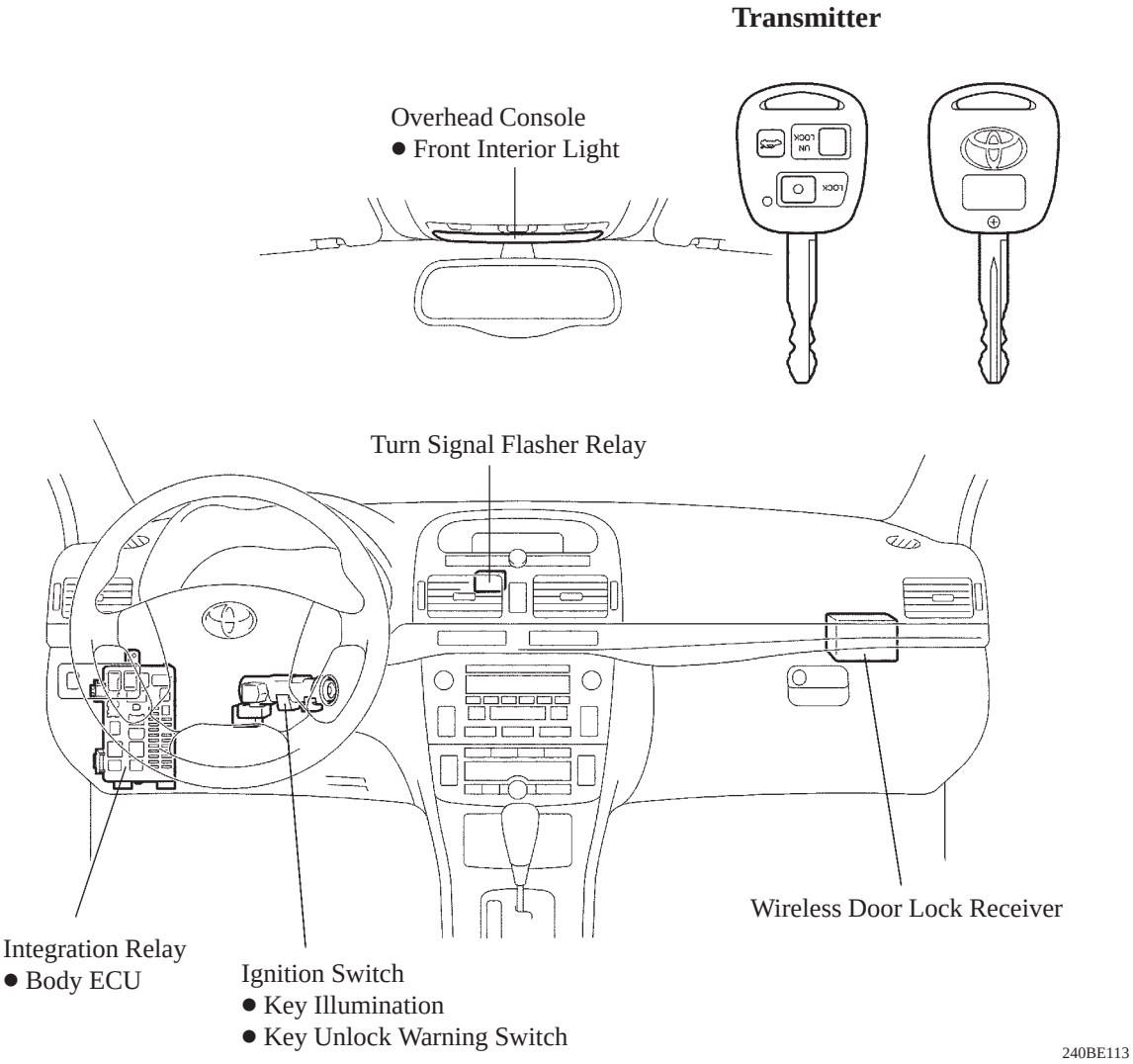

■FUNCTION

1. General

The wireless door lock remote control system has the following function:

Function	Outline
All Doors Lock	Pressing the LOCK button of the transmitter locks all doors and prohibits the electronic luggage/back door outside handle operation.
All Doors Unlock	Pressing the UNLOCK button of the transmitter unlocks all doors and recognizes the electronic luggage/back door outside handle operation.
Luggage/Back Door Unlock	Pressing the TRUNK button of the transmitter recognizes the electronic luggage/back door outside handle operation.
Double Locking System Operation*	● Pressing the LOCK button, then pressing it again within 5 seconds activates the double locking system. ● Pressing the UNLOCK button releases the double locking system.
Answer Back	The hazard light is flashed once when locking, and the hazard light is flashed twice when unlocking, to inform that the operation has been completed.
Automatic Lock	If none of the doors are opened within 30 seconds after they are unlocked by the wireless door lock remote control, all the doors are locked again automatically.
Transmitter Switch Miss-operation Prevention	When a key is in the ignition switch or any of the doors is opened completely, the lock operation of the wireless door lock remote control is temporarily cancelled to prevent miss-operation.
Repeat	If a door is not locked in response to the locking operation of the transmitter, the integration relay (Body ECU) will output a lock signal after the 1 second.
Illuminated Entry	When all the doors are locked, pressing the UNLOCK button causes the key illumination and front interior light to illuminate simultaneously with the unlock operation.
Security Function	Sends an operation signal as a rolling code.
Transmitter Recognition Code Registration Function	Enables the registering (writing and storing) of 4 types of transmitter recognition codes in the EEPROM that is contained in the wireless door lock receiver.

*: with Double Locking System

2. Transmitter Recognition Code Registration Function

The table below shows the 4 special coded ID registration function modes through which up to 4 different codes can be registered. The codes are electronically registered (written to and stored) in the EEPROM. For details of the recognition code registration procedure, refer to the Avensis Repair Manual (Pub. No. RM1018E).

Mode	Function
Rewrite Mode	Erases all previously registered codes and registers only the newly received codes. This mode is used whenever a transmitter or the wireless door lock receiver is replaced.
Add Mode	Adds a newly received code while preserving any previously registered codes. This mode is used when adding a new transmitter. If the number of codes exceeds 4, the oldest registered code is erased first.
Confirm Mode	Confirms how many codes are currently registered. When adding a new code, this mode is used to check how many codes already exist.
Prohibit Mode	To delete all the registered codes and to prohibit the wireless door lock function. This mode is used when the transmitter is lost.

ENGINE IMMOBILISER SYSTEM

■DESCRIPTION

The engine immobiliser system is a theft deterrent system that disables the engine from starting using the ignition key with an ID code that matched is the pre-registered code in the vehicle.

- This system is standard equipment of the except 1AZ-FE engine models in Europe and optional equipment on the 1AZ-FE engine model in Europe.
- This system is not provided for the models in General Countries.
- The engine immobiliser system compares the ID code that is registered in the transponder key ECU with the ID code of the transponder chip that is embedded in the ignition key. The immobiliser system unsets if these ID codes match. Thus, the transponder key ECU and the engine ECU communicate with each other to authorize fuel injection and ignition, enabling the engine to start.

■LAYOUT OF MAIN COMPONENT

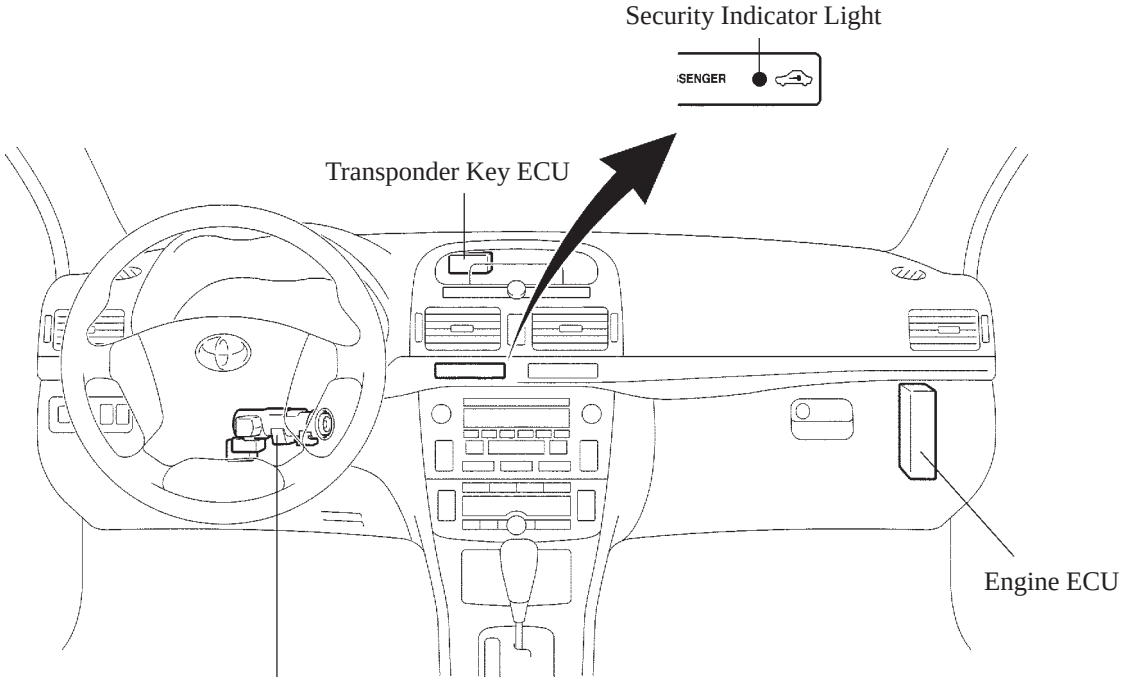

THEFT DETERRENT SYSTEM

■ DESCRIPTION

The theft deterrent system uses the door lock control system and wireless door lock remote control system parts. The theft deterrent system will operate when somebody attempts to forcibly enter the vehicle, open the engine hood, or when the battery terminals are removed and reconnected.

- The control of this system is effected by the theft deterrent ECU, which uses the BEAN (Body Electronics Area Network) to maintain communication with the integration relay (Body ECU) via the combination meter (Meter ECU).
- This system is standard equipment of the RHD model in Europe and cannot provide of the other models.
- An intrusion sensor has been adopted in the overhead console on the Sedan and Liftback Models.
- On the Wagon model, an intrusion sensor has been adopted in the overhead console, 2 intrusion sensors (rear RH and LH) have been adopted in the luggage compartment.
- The warning specifications of this system are listed below:

Warning Method	Front Interior Light and Key Illumination	Illuminates
	Hazard Light	Flashing
	Vehicle Horn	Sounds a warning at approx. 0.4 seconds cycles
	Self-Power Siren	Sounds a warning at the cycle of the self-power siren itself
	Door Lock Motor	Locking
Warning Time		27.5 sec.

▶ System Diagram ◀

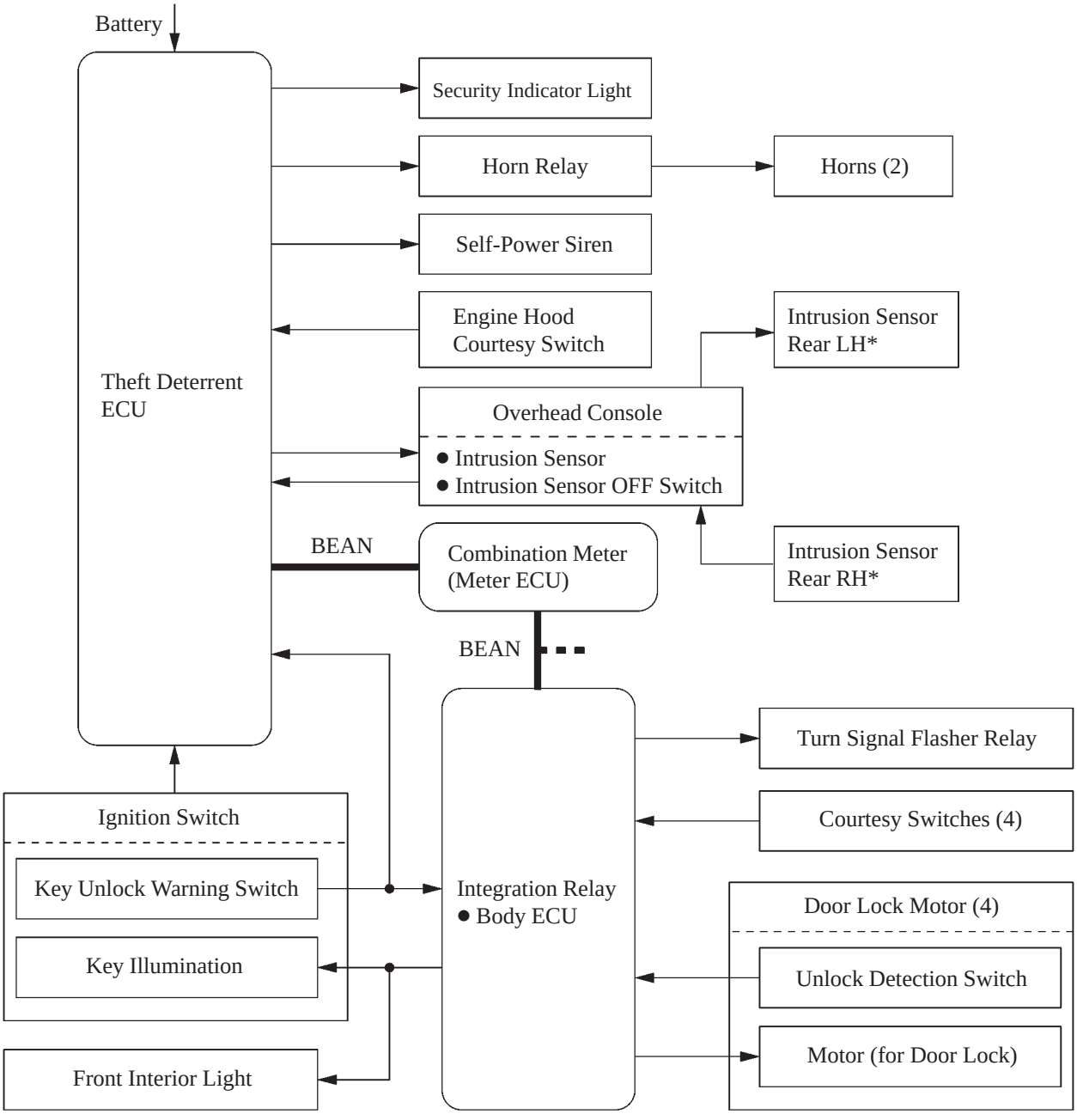

*: only for Wagon model

240BE115

BE

■LAYOUT OF MAIN COMPONENT

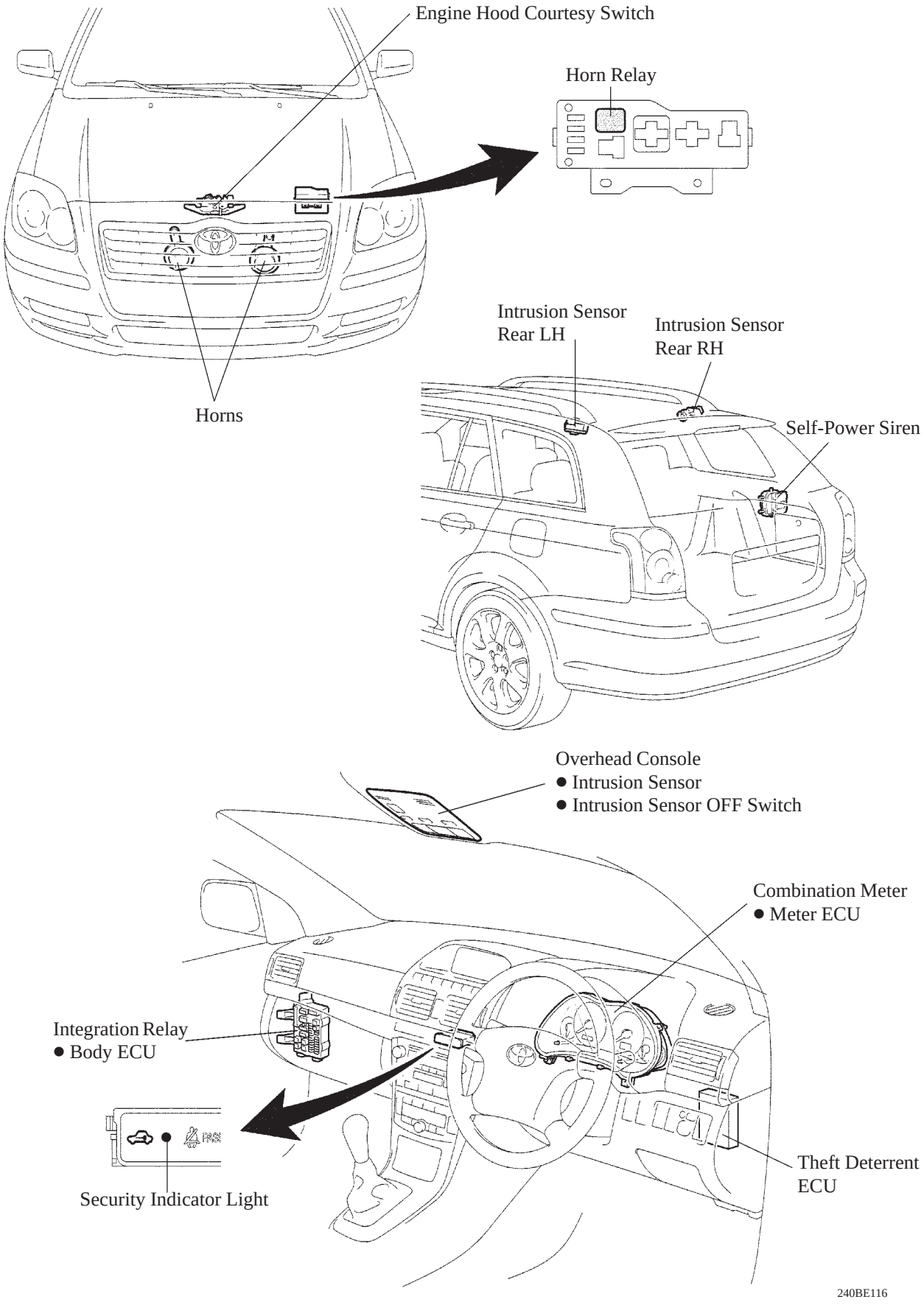

■CONSTRUCTION AND OPERATION

1. Intrusion Sensor (Ultrasonic Type)

- Intrusion sensor consists of intrusion sensor OFF switch, 2 microphone (transmitter and receiver), amplifier, and CPU. In this sensor, the ultrasonic waves are output by the transmitter microphone and input by the receiver microphone. The CPU determines that an intrusion has taken place by detecting the changes in the ultrasonic waves that have been amplified by the amplifier.
- The intrusion sensor OFF switch is a momentary type switch. Once this switch is pressed, the intrusion sensor turns OFF. To inform the driver, the blinking cycle of the security indicator light quickens for approximately 5 minutes and returns to normal thereafter. The OFF state of the intrusion sensor cancels automatically when it is unlocked by the wireless door lock remote control.
- The intrusion sensor rear LH contains a transmitter microphone and the intrusion sensor rear RH contains a receiver microphone. These sensors are connected to the intrusion sensor. The CPU of the intrusion sensor detects and determines an intrusion (Wagon model only).

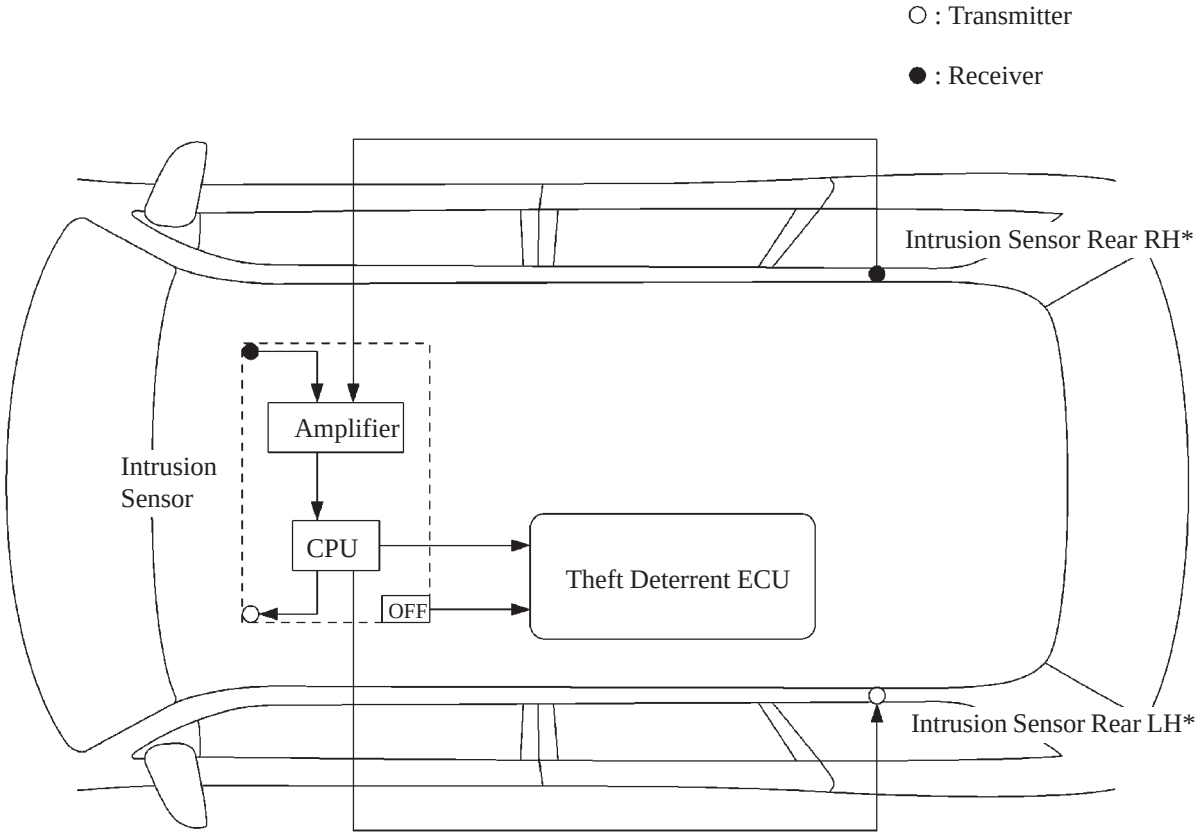

*: only for Wagon Model

240BE117

2. Self-Power Siren

During a normal operation, this siren sounds an alarm in accordance with the operation signal from the theft deterrent ECU. Because this siren has an internal battery, it can independently sound an alarm even if the vehicle's battery terminals are disconnected or if the wiring harnesses that are related to the system are cut.

■SYSTEM OPERATION

1. Basic Operation

This system activates as described in the diagram below when one of items place in the respective state.

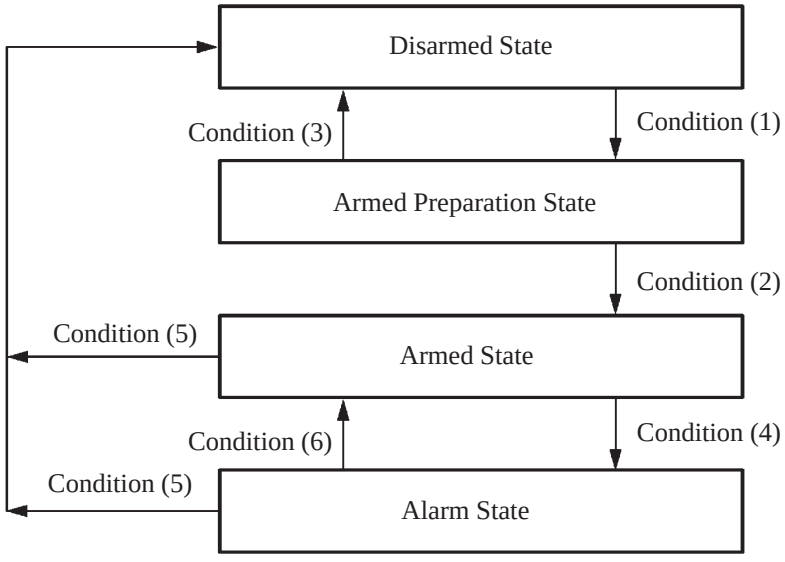

187BE40

Condition	Item
Condition (1)	● There is no ignition key in the ignition key cylinder. ● When the doors, engine food, and back door are all closed, the transmitter is used to lock all doors.
Condition (2)	When the doors, engine hood, and luggage compartment/back door are all closed and locked, and 30 seconds have elapsed.
Condition (3)	● When one of the doors, engine hood, or luggage compartment/back door is changed from “close” to “open”. ● When one of the doors, engine hood, or luggage compartment/back door is changed from “lock” to “unlock”. ● When the ignition key is inserted in the ignition key cylinder. ● When a terminal is disconnected from the battery and reconnected.
Condition (4)	● Any door, engine hood, or luggage compartment/back door is opened. ● Any door is unlocked with something other than the ignition key or transmitter. ● The engine hood is opened. ● A terminal is disconnected from the battery and reconnected. ● The wiring harness is directly connected as if the turn the ignition switch ON. ● The intrusion sensor has detected an intruder.
Condition (5)	The transmitter is used to unlock the doors.
Condition (6)	After approximately 30 seconds of the alarm time have elapsed.

2. Forced Door Lock Operation

When the system starts the alarm state, and one of the doors is subsequently unlocked, the forced door lock operation forcefully outputs a door lock signal to prevent intrusion into the vehicle. This operation becomes activated when all the starting conditions listed below have been met, and stops when one of the stopping conditions occurs.

Condition	Item
Starting Condition	● The theft deterrent system is in the alarm state. ● There is no key inserted in the ignition key cylinder. ● If one of the doors is unlocked.
Stopping Condition	● All doors are locked. ● The warning ends. ● The ignition key is inserted in the ignition key cylinder.

SRS AIRBAG SYSTEM

■ DESCRIPTION

- The SRS (Supplemental Restraint System) driver and front passenger airbags use to help reducing the shocks to the head and chest of the driver the event for frontal impact collision as supplements the seat belts.
- The SRS knee airbag has been designed newly to help reducing the shocks to the knee of the driver in the event for frontal impact collision as supplements the seat belts.
- The SRS side and curtain shield airbags uses to help reducing the shocks to the head and chest of the driver, front passenger, and rear outer passenger in the event for side impact collision.
  Also, SRS curtain shield airbag has been designed newly to help reducing the shocks the head of the rear outer passenger in the event for rear side impact collision.
- The airbag sensor assembly uses a fuel cut control that stops the fuel pump when the any airbag is deployed. (only for Gasoline Engine)

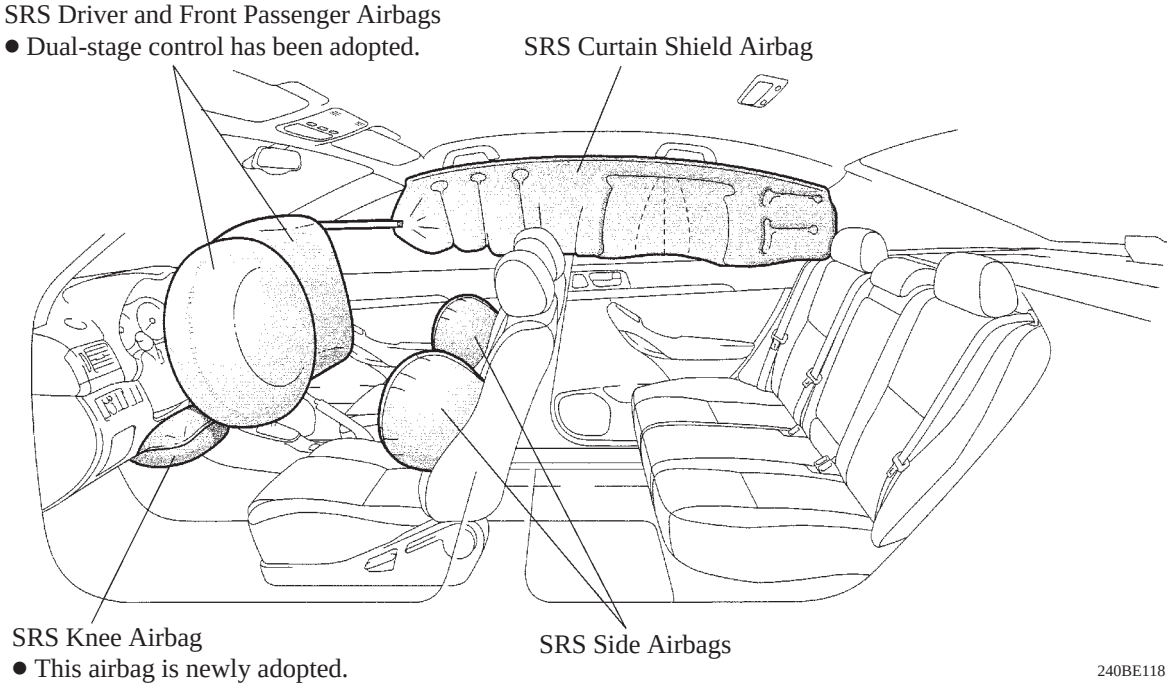

- The new Avensis has an SRS airbag system with the following equipment:

Engine		Except 1AZ-FE	1AZ-FE
Airbag	Drive and Front Passenger	STD	STD
	Knee	STD	STD
	Side	STD	STD
	Curtain Shield	STD/less OPT	OPT

▶ System Diagram ◀

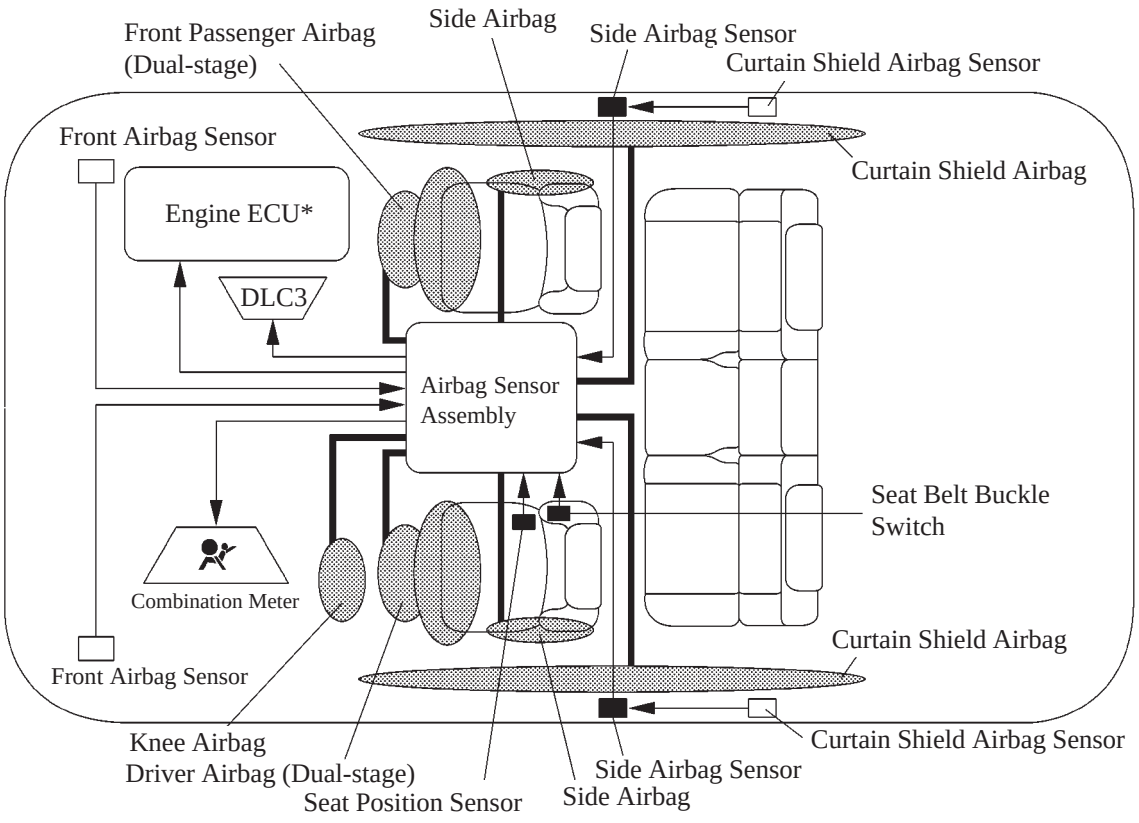

240BE119

*: only for Gasoline Engine

■ MAJOR DIFFERENCE (from Previous Model)

Item	Changes
Driver and Front Passenger Airbags	● Dual-stage control controls the airbag inflating output optimum by judging the extent of impact, seat position and whether or not the seat belt is fasten, has been adopted. ● Front airbag sensor changes. (Mechanical type → Electrical type) ● Seat position sensor adds.
Knee Airbag	Newly added.
Curtain Shield Airbag	● Inflator has been relocated (front pillar → center pillar). ● Curtain shield airbag sensor added. ● Size of airbag has been increased.
Airbag Sensor Assembly	Electrical connection check mechanism of the connector in the airbag sensor assembly has been adopted.
SRS Airbag Warning Light	An active circuit is used. For details, see page BE-31.
Diagnosis	● The diagnosis has been adopted the M-OBD (Multiplex On-Board Diagnosis). ● The method for output and clear (using service wire) the DTC (Diagnostic Trouble Codes) has been changed.

▶ System Diagram ◀

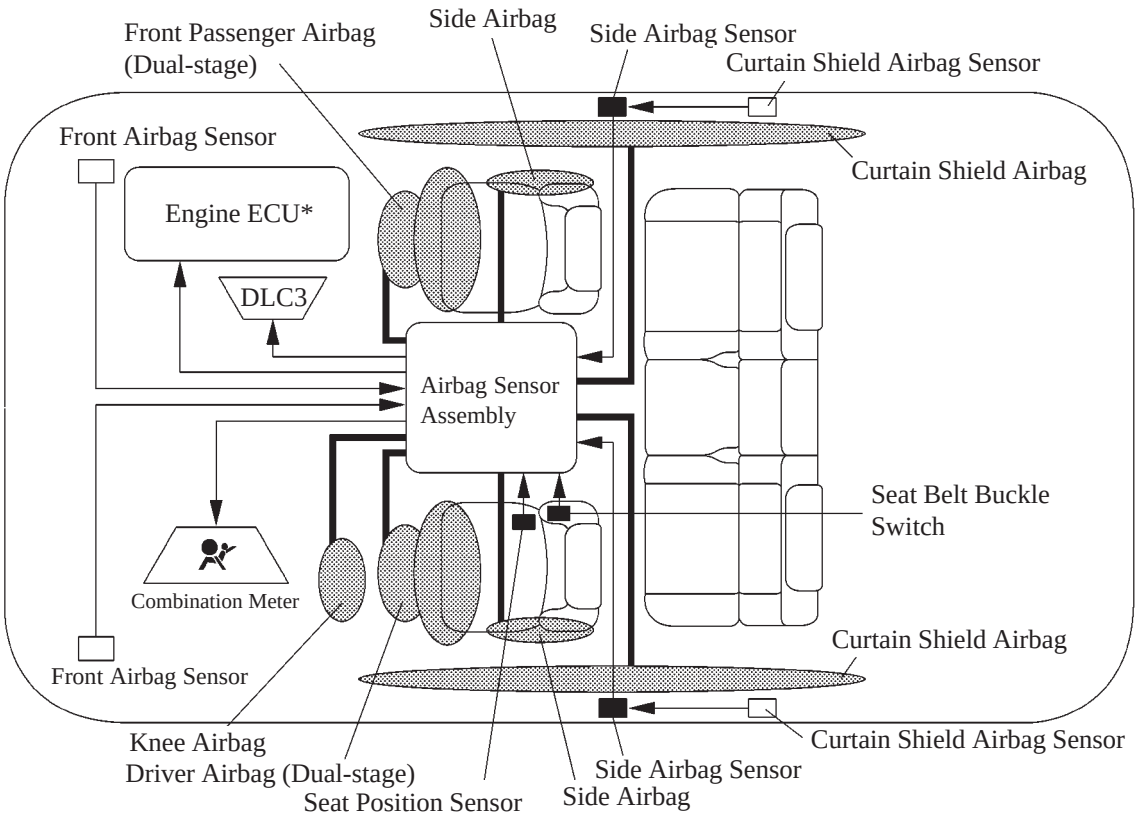

240BE119

*: only for Gasoline Engine

■ MAJOR DIFFERENCE (from Previous Model)

Item	Changes
Driver and Front Passenger Airbags	● Dual-stage control controls the airbag inflating output optimum by judging the extent of impact, seat position and whether or not the seat belt is fasten, has been adopted. ● Front airbag sensor changes. (Mechanical type → Electrical type) ● Seat position sensor adds.
Knee Airbag	Newly added.
Curtain Shield Airbag	● Inflator has been relocated (front pillar → center pillar). ● Curtain shield airbag sensor added. ● Size of airbag has been increased.
Airbag Sensor Assembly	Electrical connection check mechanism of the connector in the airbag sensor assembly has been adopted.
SRS Airbag Warning Light	An active circuit is used. For details, see page BE-31.
Diagnosis	● The diagnosis has been adopted the M-OBD (Multiplex On-Board Diagnosis). ● The method for output and clear (using service wire) the DTC (Diagnostic Trouble Codes) has been changed.

■ AIRBAG FOR FRONTAL COLLISION

1. General

There are three airbags for frontal collisions: driver, front passenger, and knee (for the driver). These airbags deploy simultaneously. The airbags for the driver and the front passenger use dual-stage control.

- A dual-stage controls the airbag inflating output optimum by judging the extent of the impact for front passenger airbag, and the extend of the impact, seat position and whether or not the seat belt is fastened for the driver airbag.

▶ System Operation ◀

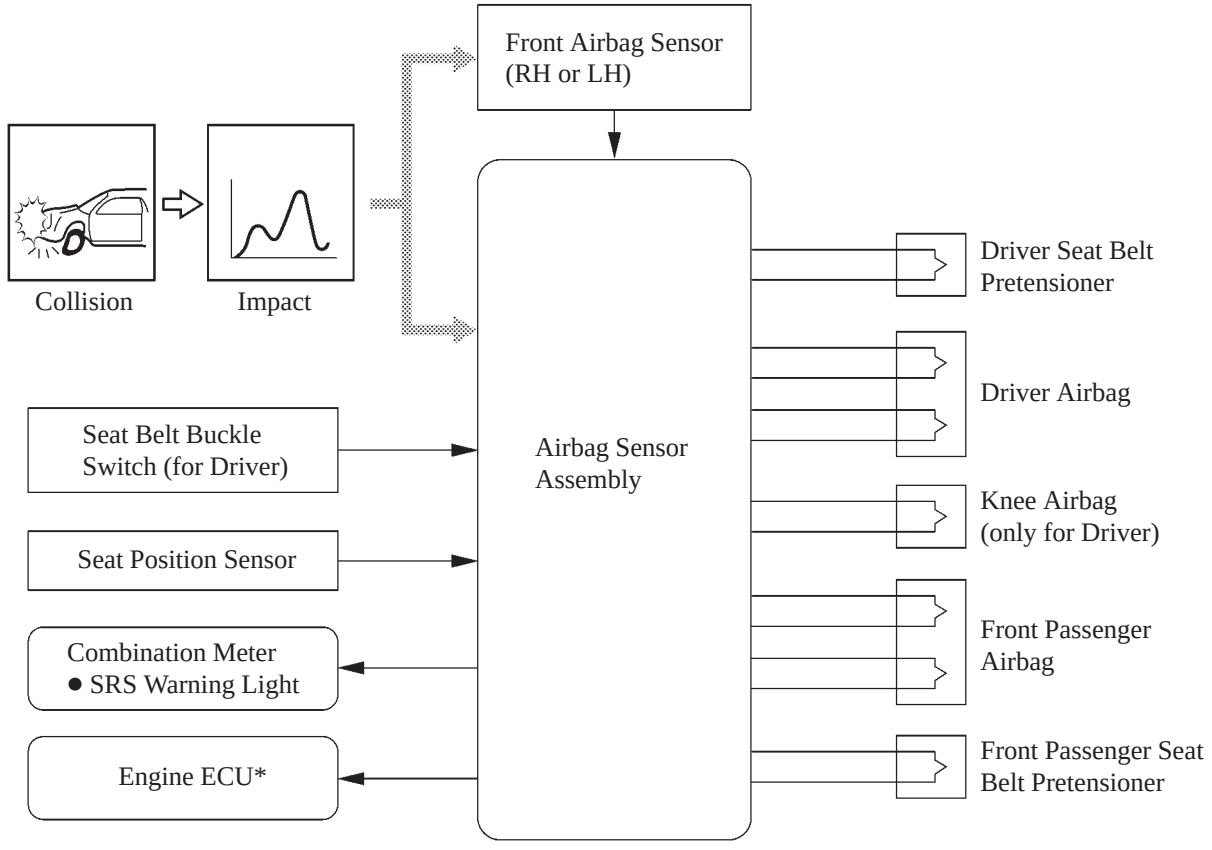

*: only for Gasoline Engine

240BE120

Service Tip

- In accordance with the structure change of the driver and front passenger inflators on new Avensis, a SST (09082-00802) used for scrapping drive and a SST (09082-00780) used for scrapping front passenger airbag have been adopted newly.
- A SST (09082-00802) used for scrapping knee airbag has been adopted newly.

2. Driver and Front Passenger Airbags

To support the dual-stage control, these airbag assemblies contain 2 sets of initiators and propellants. The airbag sensor assemblies help optimize the airbag inflation output by delaying the inflation timing of these initiators.

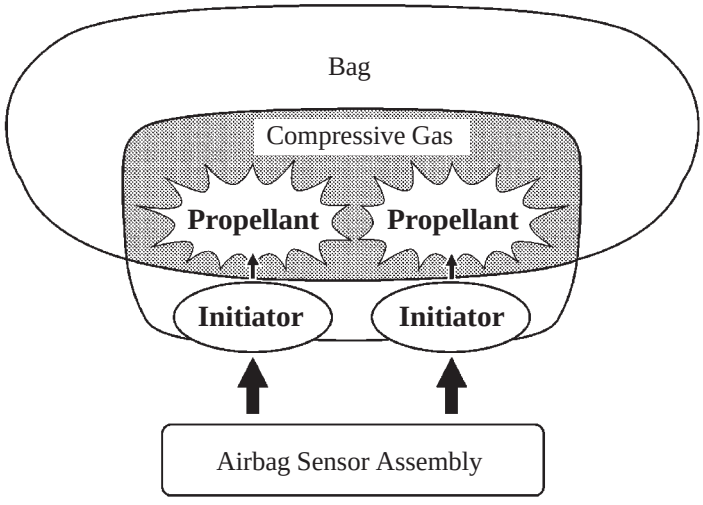

3. Front Airbag Sensor

- On the new Avensis, the previous mechanical type front airbag sensor (consisting of movable and stationary contact points) has been changed to an electrical (deceleration sensor) type front airbag sensor.
- The deceleration sensor is enclosed in the front airbag sensor. Based on the deceleration of the vehicle during a front collision, a distortion is created in the sensor and converted into an electrical signal. Accordingly, the extent of the initial collision can be detected in detail.

4. Seat Position Sensor

- The seat position sensor, which is attached to the seat rail of the driver seat, detects the sliding position of the seat. In addition, the shielding plate to make the seat position sensor judge the seat position is installed on this seat rail.
- The seat position sensor use a Hall IC for its sensor and has magnet portion on its opposite side.

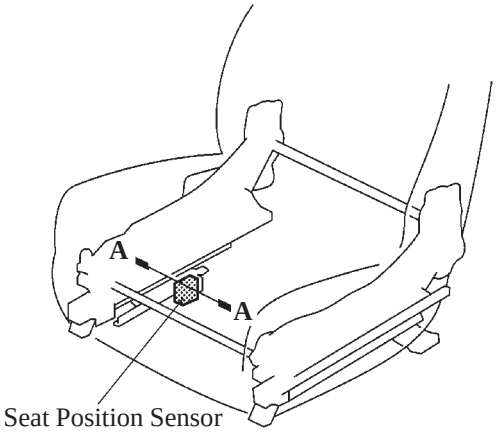

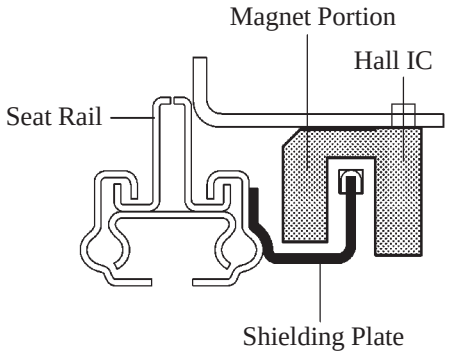

A – A Cross Section

240BE121

- The seat position detection by the seat position sensor judges that the seat position is rearward if the shielding plate is between the sensor and the seat position is forward if the shielding plate is not between the sensor.

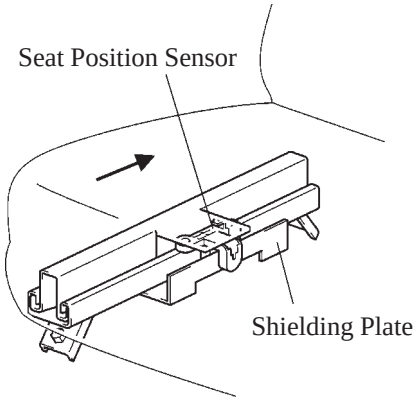

230LX91

Seat position is rearward

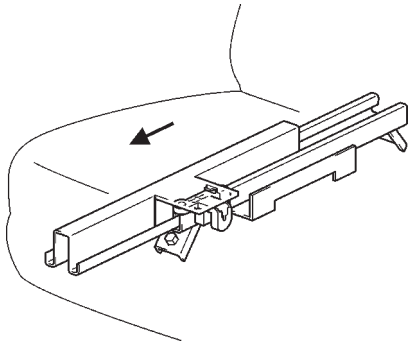

230LX92

Seat position is frontward

5. Knee Airbag

The knee airbag, which is mounted below the instrument panel in front of the driver seat, consists of a bracket, airbag door, inflator, and a bag.

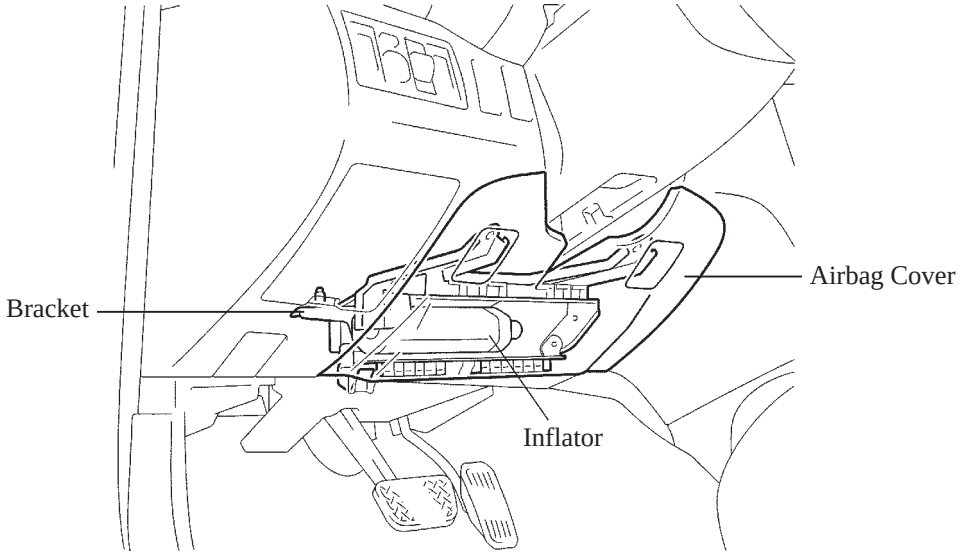

240BE122

■ AIRBAG FOR SIDE / REAR SIDE COLLISION

1. General

The airbag for side collisions contains two airbags: side and curtain shield. These airbags deploy simultaneously. The airbag for rear side collisions contains only the curtain shield airbag.

- With the airbag for side collisions, if the side airbag sensor detects an impact, it informs the airbag sensor assembly, and the airbag sensor assembly causes the side and curtain shield airbags to be deployed simultaneously.
- With the airbag for rear side collisions, if the curtain shield airbag sensor detects an impact, it informs the airbag sensor assembly via the side airbag sensor, and the airbag sensor assembly causes the curtain shield airbag to be deployed.

▶ System Operation ◀

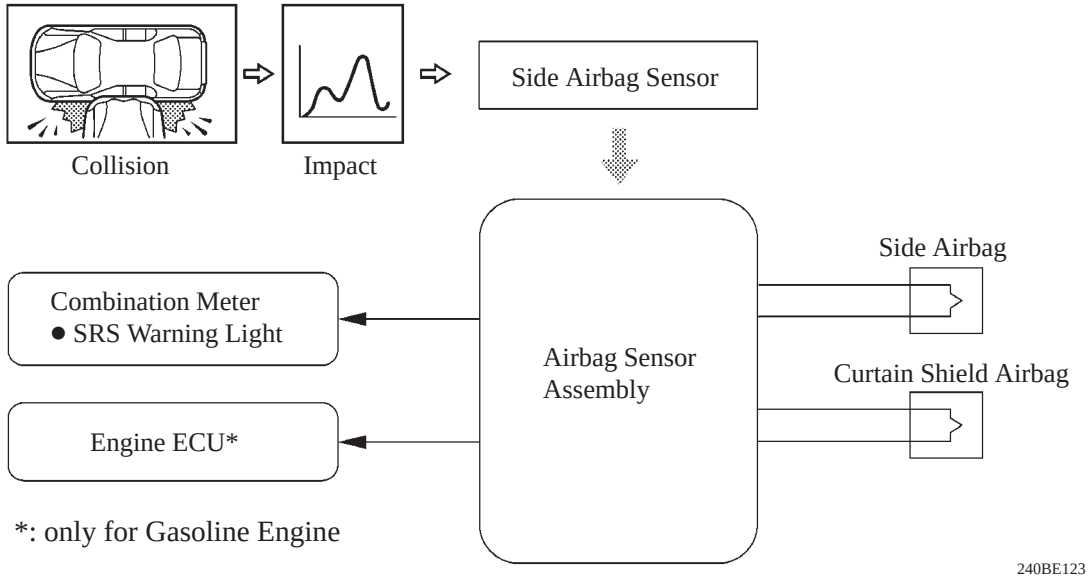

Airbag for Side Collision

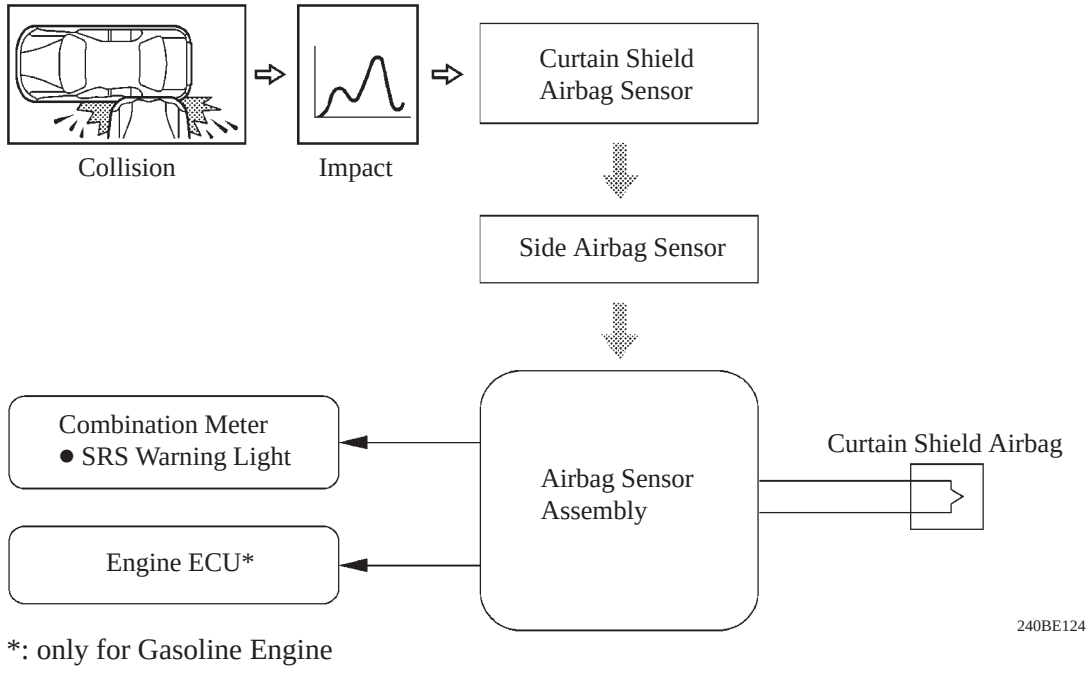

Airbag for Rear Side Collision

2. Side Airbag Sensor and Curtain Shield Airbag Sensor

The deceleration sensor is enclosed in each side and curtain shield airbag sensor. Based on the deceleration of the vehicle during a side or side rear collision, a distortion is created in the sensor and converted into an electrical signal.

3. Curtain Shield Airbag

Due to the increased size of the airbag, the inflator for the curtain is installed above the center pillar in order to ensure an efficient deployment.

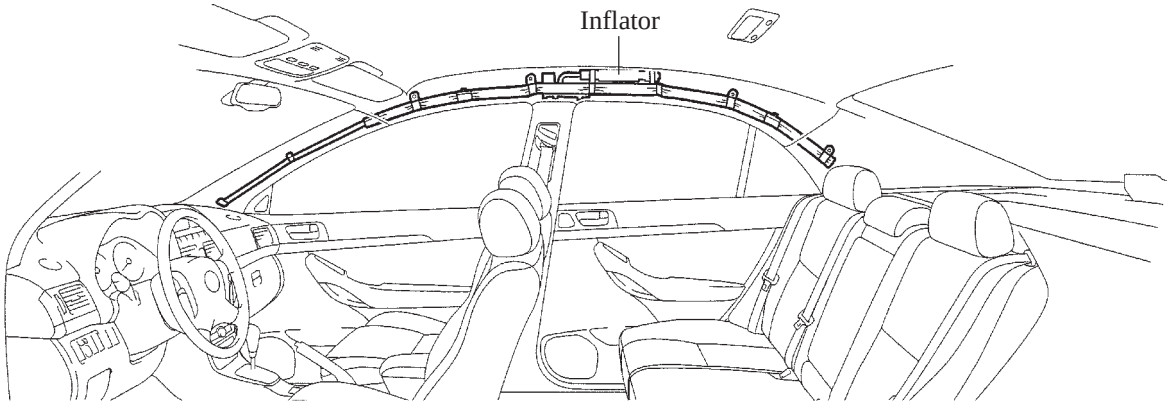

240BE125

Service Tip

A SST (09082-00802) used for scrapping curtain shield airbag has been adopted newly.

■DIAGNOSIS

1. General

If the airbag sensor assembly detects a malfunction in the SRS airbag system, the airbag sensor assembly stores the malfunction data in memory, in addition to illuminating the SRS airbag warning light.

- The M-OBD (Multiplex On-Board Diagnosis) can output 5-digit DTC (Diagnostic Trouble Codes) to the hand-held tester and 2-digit DTC to the SRS airbag warning light.
- Electrical connection check mechanism to detect the connection condition of the connector in the airbag sensor assembly has been adopted.
- If SRS airbag deploys, the airbag sensor assembly will turn on the SRS airbag warning light. However, different from the ordinary diagnosis function, DTC will not be memorized. The SRS airbag warning light can be only turned off by changing the airbag sensor assembly to the new one.
- The method for output and clear (using service wire) the DTC (Diagnostic Trouble Codes) has been changed. For details, see the Avensis Repair Manual (Pub. No. RM1018E).
- The DTC in new Avensis listed below have been added or disconnected.

▶ Added DTC ◀

DTC No.		Detection Item	DTC No.		Detection Item
2-digit	5-digit		2-digit	5-digit	
17	B1180	Short in D squib (2nd step) circuit	38	B1154	Curtain shield airbag sensor assembly (RH) malfunction
18	B1181	Open in D squib (2nd step) circuit	39	B1155	Curtain shield airbag sensor assembly (LH) malfunction
19	B1182	Short in D squib (2nd step) circuit (to ground)	49	B1650	Short in knee squib circuit
22	B1183	Short in D squib (2nd step) circuit (to B+)		B1651	Open in knee squib circuit
25	B1153	Seat position airbag sensor assembly malfunction		B1652	Short in knee squib circuit (to ground)
26	B0121	Short in seat belt buckle switch (RH) circuit		B1653	Short in knee squib circuit (to +B)
	B0122	Open in seat belt buckle switch (RH) circuit	55	B1187	Short in P squib (2nd step) circuit (to ground)
27	B0126	Short in seat belt buckle switch (LH) circuit	56	B1188	Short in P squib (2nd step) circuit (to B+)
	B0127	Open in seat belt buckle switch (LH) circuit	57	B1185	Short in P squib (2nd step) circuit
36	B1148	Front airbag sensor (RH) malfunction	58	B1186	Open in P squib (2nd step) circuit
37	B1149	Front airbag sensor (LH) circuit	—	—	—

▶ Discontinued DTC ◀

DTC No.		Detection Item
2-digit	5-digit	
15	—	Front airbag sensor (RH) malfunction
16	—	Front airbag sensor (LH) malfunction

2. Electrical Connection Check Mechanism

This mechanism is composed from the terminals for diagnosis arranged for each of 3 connectors of the airbag sensor assembly side and the disconnection detection pin arranged for each of 3 connectors of wiring harness side.

- The disconnection detection pin connects with the diagnosis terminals when the connector is completely locked.
- When 3 connectors are connected (3 connectors are completely locked), the terminals for diagnosis and the disconnection detection pin will be similarly connected. As a result, a series circuit is created. Upon detecting this condition, the airbag sensor assembly will determine that 3 connectors are completely locked.
- When 3 connectors are partially connected (any connector is not completely locked), the terminals for diagnosis and the disconnection detection pin will not be connected. As a result, no series circuits will be formed, and the voltage of the electrical connection check circuit changes to 0V. Upon detecting this condition, the airbag sensor assembly will determine that any connector is partially connected, and will cause the SRS warning light to illuminate. At this time, output the DTC (B1135/24).

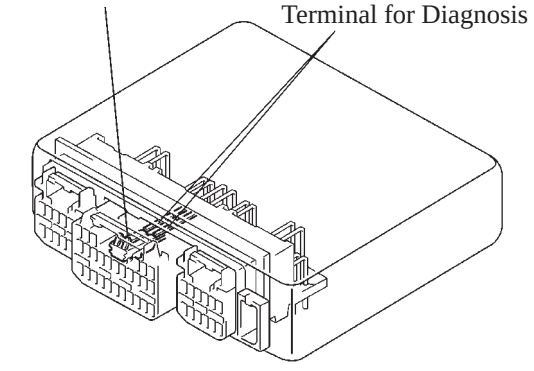

233BE59

Airbag Sensor Assembly

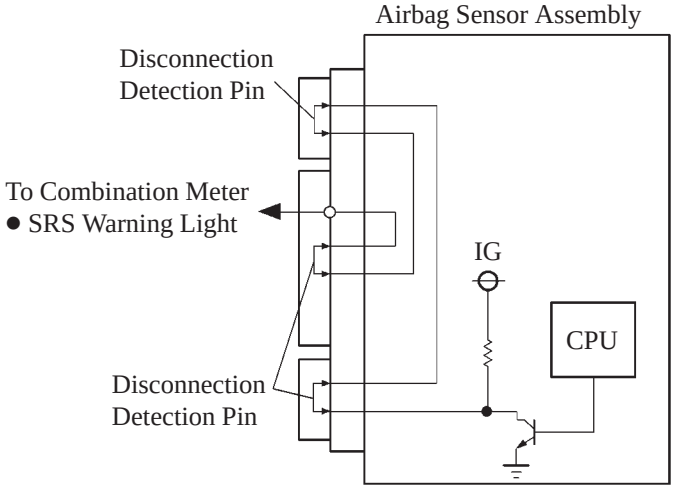

233BE63

Circuit Diagram

BE

SEAT BELT REMINDER SYSTEM

■ DESCRIPTION

If the seat belt is not buckled, this system flashes the seat belt reminder light or sounds the buzzer as a reminder.

- The new Avensis has a seat belt reminder system with the following equipment:

Models		Except 1AZ-FE Engine	1AZ-FE Engine
Seat Belt Reminder Light	Driver	STD	STD
	Front Passenger	STD	—
Buzzer (Including Combination Meter)	Driver	STD	—
	Front Passenger	STD	—

- When the ignition switch is turned ON, this system detects the condition of the seat belts based on the signals from the seat belt buckle switches (for the driver and front passenger) and the occupant detection sensor.
- The buzzer sounds when the vehicle speed exceeds 15 km/h (9 mph) to emphasize the fact that the seat belt is unbuckled. After 30 seconds, this sound changes to emphasize. This sound sounds during 90 seconds. Once a buzzer begins to sound, it will continue be coming until it buckles a seat belt or turns OFF a key.

▶ System Diagram ◀

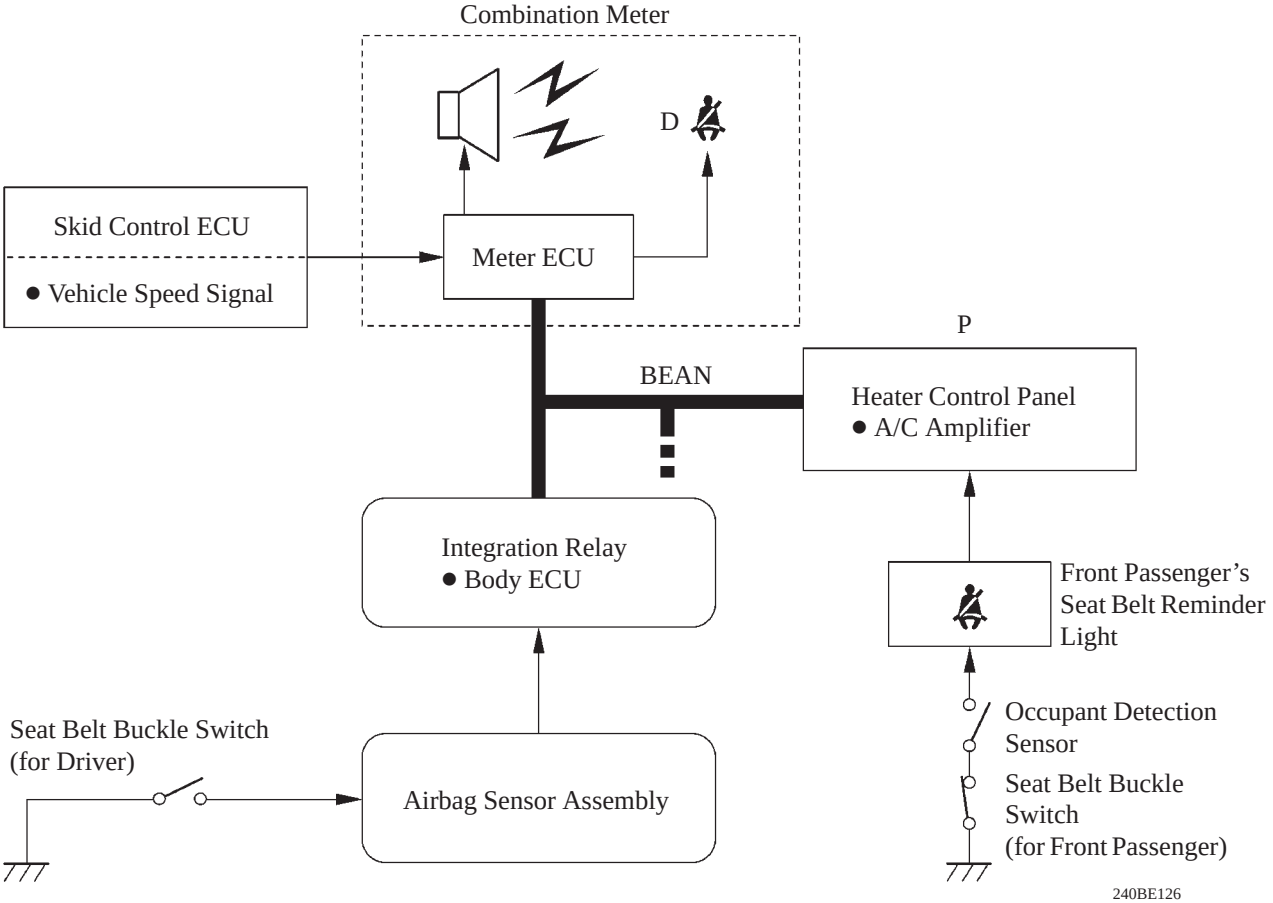

■OCCUPANT DETECTION SENSOR

The occupant detection sensor, which is enclosed in the seat cushion of the front passenger seat, is used to detect whether or not the front passenger seat is occupied.
This sensor, which is shaped as illustrated below, consists of a construction in which two sheets of electrodes sandwich a spacer. When the occupant is seated, the electrode sheets come in contact with each other through the hole that is provided in the spacer portion, thus enabling the current to flow.
Thus, the sensor detects whether or not an occupant is seated in the front passenger seat.

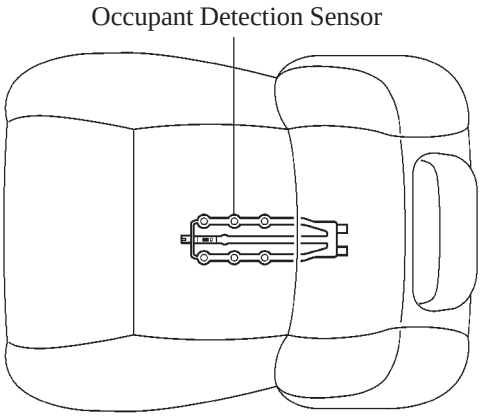

240BE127

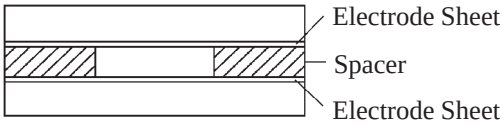

Sensor OFF

159BE18

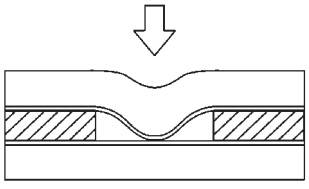

Sensor ON

159BE19

MOON ROOF SYSTEM

■ DESCRIPTION

- The new Avensis has a moon roof system with the following equipment:

Destination	Europe		General Countries
Model	Except 1AZ-FSE x AT on the Wagon model	1AZ-FSE x AT on the Wagon model	—
Moon Roof	OPT	—	—

- On the previous model, the moon roof position was detected by a limit switch. On the new Avensis, has adopted a new mechanism that uses pulse sensors (Hall IC) to detect the moon roof position. The sliding roof ECU, sliding roof motor, and 2 Hall ICs have been integrated to reduce the number of components.
- On the new Avensis, the jam protection function of the moon roof is now enabled even during the tilt-down movement. Along with this change, the sliding roof ECU inputs a vehicle speed signal when the vehicle is in motion. This corrective measure prevents the jam protection from tripping unintendedly due to the air resistance that is applied to the moon roof.

▶ System Diagram ◀

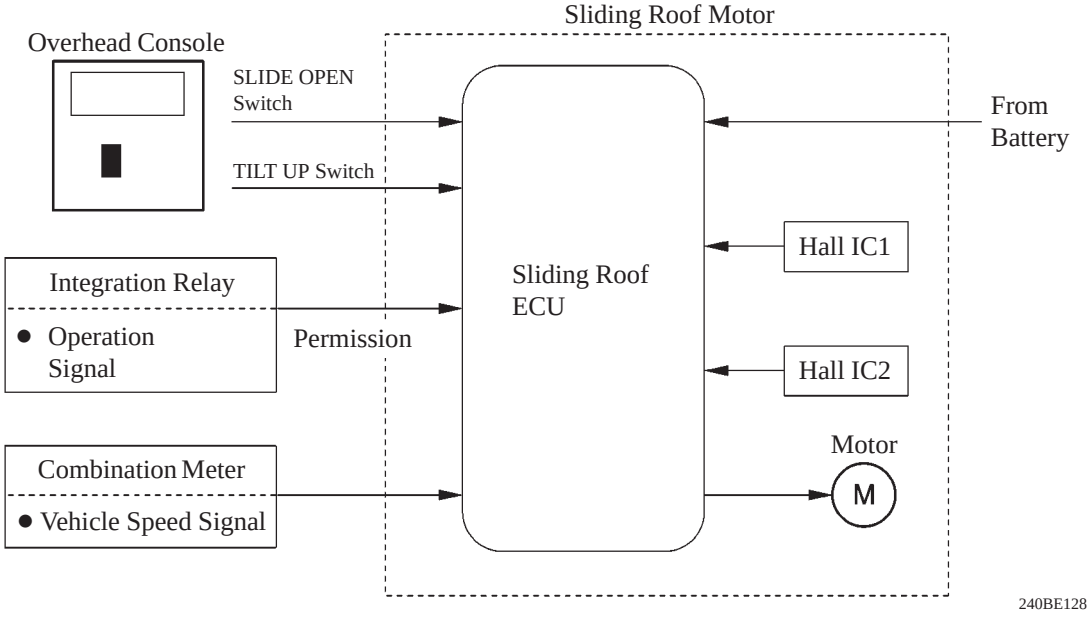

Service Tip

The sliding roof ECU memorizes the initial position of the moon roof. This position may disappear from memory or a wrong position might be stored in memory due to some causes such as the disconnection of a battery terminal while the moon roof is in operation. When this occurs, the moon roof will not operate correctly. In this case, the moon roof position must be initialized as described below.

1) Push and hold the TILT UP switch until the moon roof stops moving. Then release the switch.
2) After 10 sec., push and hold the TILT UP switch until the tilts all the way up and then tilts down a little automatically.
3) Release the TILT UP switch and then, within 5 sec., push and hold it on the TILT UP switch again until the 3 operations (tilt down, slide open, slide close) have taken place.
4) When these operations have been performed, normalization is complete.

For details, refer to the Avensis Repair Manual (Pub. No. RM1018E).

- The moon roof system has the following function:

Function	Outline
Manual open-and-close	This function causes the moon roof to open (or close) while the SLIDE OPEN switch (or TILT UP switch) is being pulled. The moon roof stops as soon as the switch is released.
One-touch auto open-and-close	This function enables the moon roof to be fully opened (or closed) at a briefly touch of the SLIDE OPEN switch (or TILT UP switch).
Manual tilt up-and-down	This function causes the moon roof to tilt up (or tilt down) while the TILT UP switch (or SLIDE UP switch) is being pulled. The moon roof stops as soon as the switch is released.
One-touch auto tilt up-and-down	This function enables the moon roof to be fully tilt up (or down) at a briefly touch of the TILT UP switch (or SLIDE OPEN switch).
Jam Protection	A “jam protection function” automatically stops the moon roof and moves it open half way (or fully tilt up) if a foreign object gets jammed in the moon roof during close or tilt down operation.
Key-off operation	The “key-off operation function” makes it possible to operate the moon roof for approx. 43 seconds after the ignition switch is turned to the ACC or LOCK position, if the front doors are not opened.

■JAM PROTECTION DETECTION MECHANISM

The Hall IC converts the changes in the magnetic flux that occur through the rotation of the worm gear into pulse signals and outputs them to the ECU.

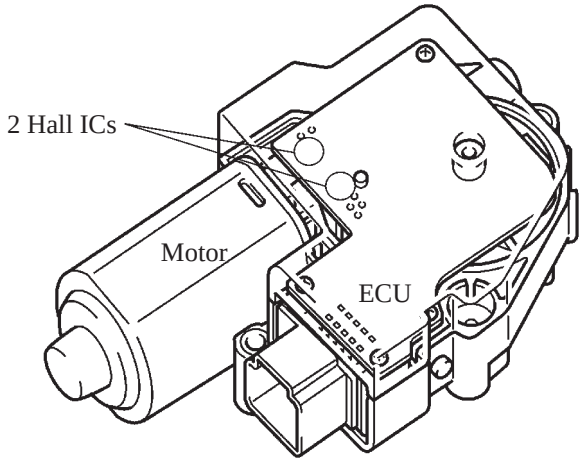

240BE129

Service Tip

The inspection procedure has been changed due to the changes in the sliding roof motor circuit. For details, refer to Avensis Repair Manual (Pub. No. RM1018E).

- The moon roof system has the following function:

Function	Outline
Manual open-and-close	This function causes the moon roof to open (or close) while the SLIDE OPEN switch (or TILT UP switch) is being pulled. The moon roof stops as soon as the switch is released.
One-touch auto open-and-close	This function enables the moon roof to be fully opened (or closed) at a briefly touch of the SLIDE OPEN switch (or TILT UP switch).
Manual tilt up-and-down	This function causes the moon roof to tilt up (or tilt down) while the TILT UP switch (or SLIDE UP switch) is being pulled. The moon roof stops as soon as the switch is released.
One-touch auto tilt up-and-down	This function enables the moon roof to be fully tilt up (or down) at a briefly touch of the TILT UP switch (or SLIDE OPEN switch).
Jam Protection	A “jam protection function” automatically stops the moon roof and moves it open half way (or fully tilt up) if a foreign object gets jammed in the moon roof during close or tilt down operation.
Key-off operation	The “key-off operation function” makes it possible to operate the moon roof for approx. 43 seconds after the ignition switch is turned to the ACC or LOCK position, if the front doors are not opened.

■JAM PROTECTION DETECTION MECHANISM

The Hall IC converts the changes in the magnetic flux that occur through the rotation of the worm gear into pulse signals and outputs them to the ECU.

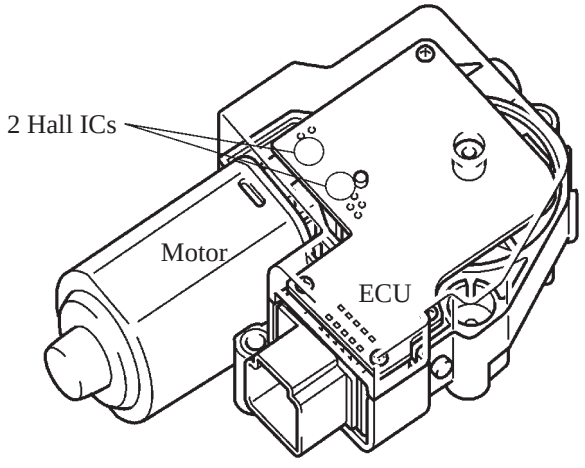

240BE129

Service Tip

The inspection procedure has been changed due to the changes in the sliding roof motor circuit. For details, refer to Avensis Repair Manual (Pub. No. RM1018E).

- To control the jam protection function, the ECU determines the amount of movement and the jamming of the moon roof from the pulse signals from the Hall IC1, and the moving direction of the moon roof from the phase difference between the pulses from the Hall IC1 and Hall IC2.

▶ Judgment of Amount of Movement and Jamming ◀

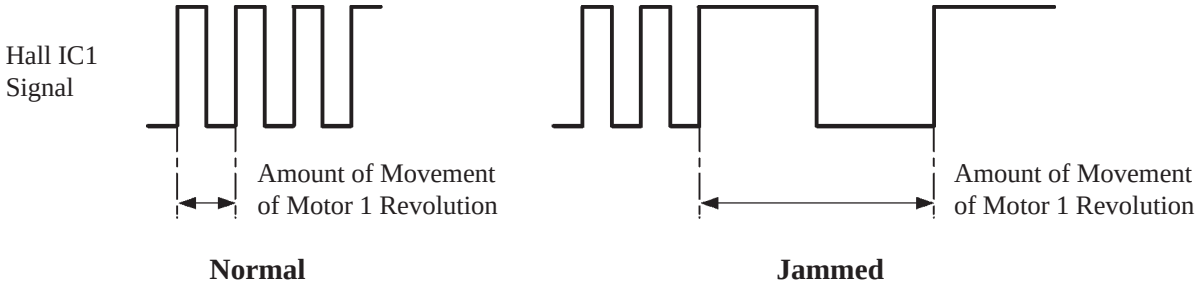

232BE34

▶ Judgment of Moving Direction ◀

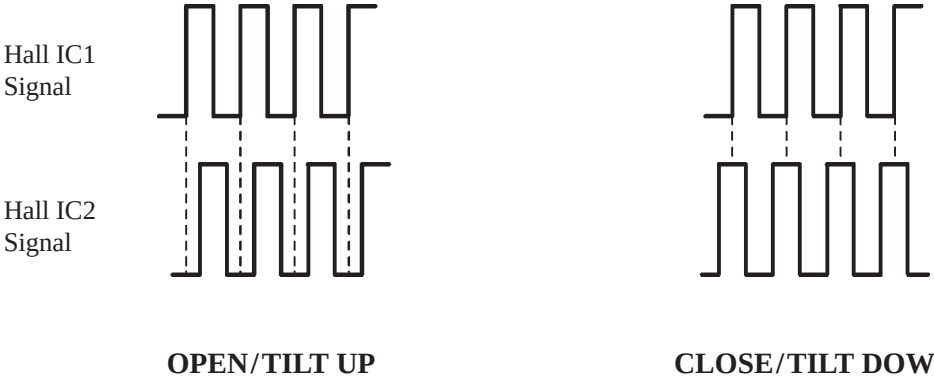

232BE35

CRUISE CONTROL SYSTEM

■ DESCRIPTION

Once the system is set to a desired vehicle speed, the throttle valve position or injection volume is adjusted automatically to maintain the vehicle speed without depressing the accelerator pedal.

- The new Avensis has a moon roof system with the following equipment:

Destination	Europe				General Countries
Engine	1ZZ, 3ZZ, 1AZ-FE	1AZ-FSE	1CD-FTV		1AZ-FE
Grade	—	—	ENTRY	Others	—
Cruise Control	—	OPT	—	OPT	—

- On the 1AZ-FE engine, this system effects control through the ETCS-i system.
- On the 1CD-FTV engine, this system effects control through the common-rail type Diesel EFI system.
- The cruise control ECU is integrated in the Engine ECU.

▶ System Diagram ◀

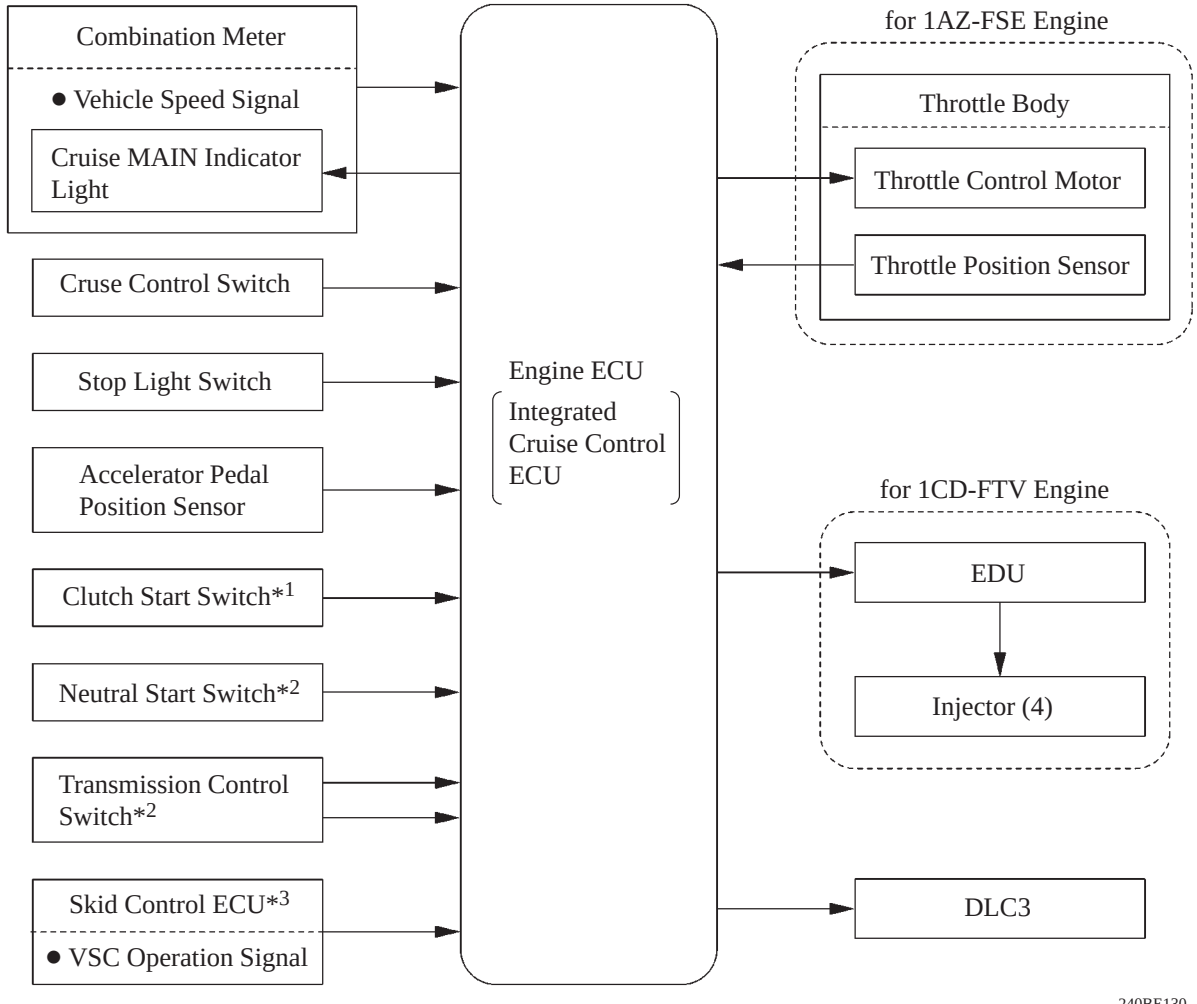

*1: Only for Manual Transaxle
*2: Only for Automatic Transaxle
*3: with Brake Control System (ABS with EBD, Brake Assist, TRC, VSC)

BE

■LAYOUT OF MAIN COMPONENT

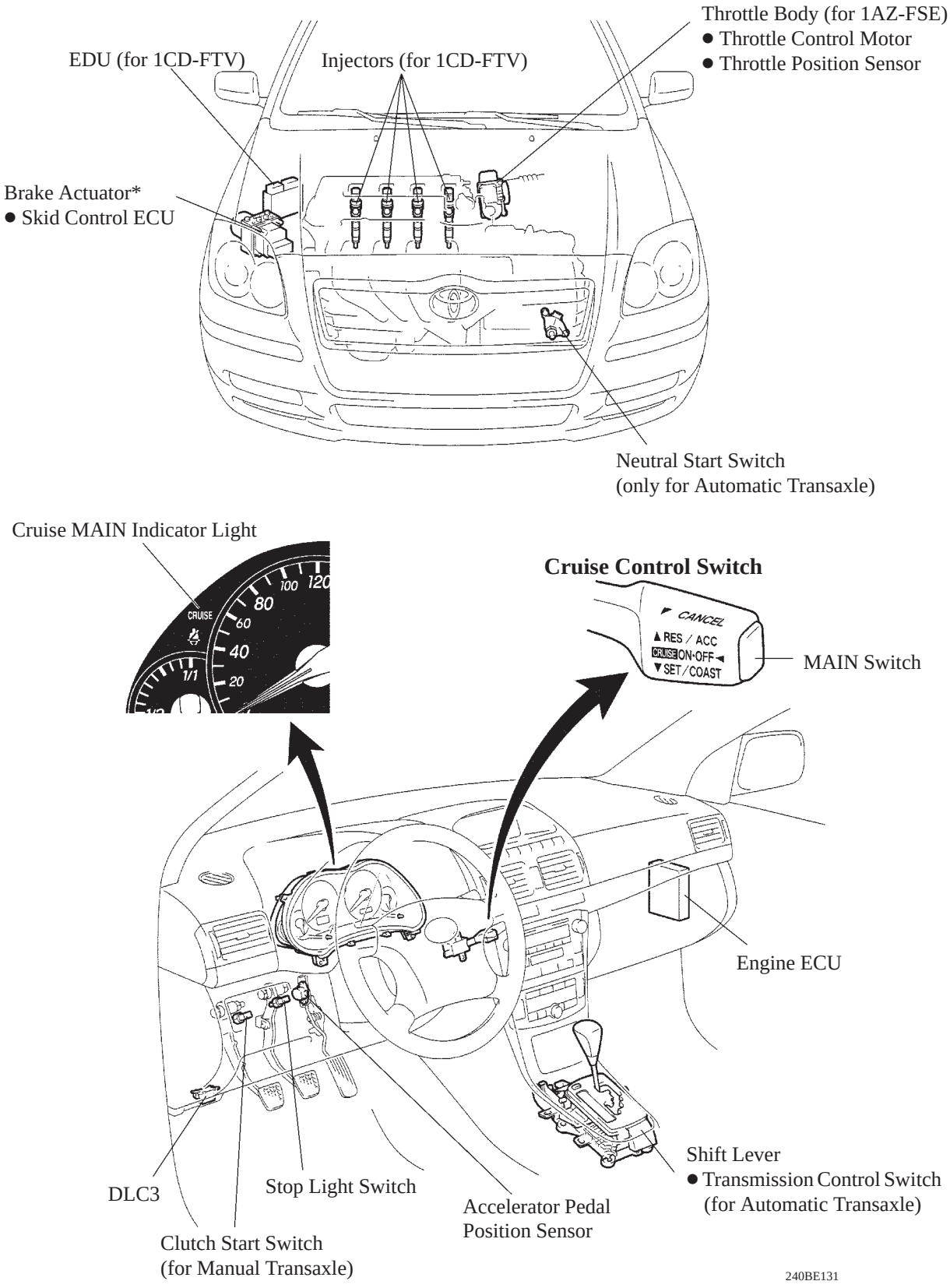

*: with Brake Control System (ABS with EBD, Brake Assist, TRC, VSC)

■FUNCTION

1. General

The cruise control system has the following function:

Function	Outline	
Constant Speed Control	1AZ-FSE Engine	The Engine ECU compares the actual vehicle speed and the set speed and if the vehicle speed is higher than the set speed, it activates the throttle control motor in the throttle closing direction. If the vehicle speed is lower than the set speed, it activates the throttle motor in the throttle opening direction.
	1CD-FTV Engine	The Engine ECU compares the actual vehicle speed and the set speed. If the vehicle speed is higher than the set speed, the Engine ECU decreases the injection volume by regulating via the EDU the 4 injectors. If the vehicle speed is lower than the set speed, the Engine ECU increases the injection volume by regulating via the EDU the 4 injectors.
Set Control	Provided that the conditions given below have been met, the cruise control switch is pressed to the SET/COAST side and released, the MAIN switch is turned ON, and the engine ECU stores the vehicle speed in memory and continues to control the vehicle at that speed. ● The vehicle is running within a cruising speed control range [approx. 40 km/h (25 mph) or more]. ● Shift lever position is D or S mode position and gear is 3rd or 4th gear (for Automatic Transaxle).	
Low Speed Limit Control	The low speed limit is the lowest speed that cruise control can be set and is designed at approx. 40 km/h (25 mph). The cruise control cannot be set below that speed. If the vehicle speed drops below that speed while running in the cruise control mode, the cruise control is cancelled automatically and the set speed in the memory is cleared.	
Accelerator Control	1AZ-FSE Engine	When the cruise control switch is kept pushed to the RES/ACC side while running in the cruise control mode, the throttle control motor is energized in the throttle opening direction. The vehicle keeps accelerating and the Engine ECU stores the vehicle speed when the hand is released from the cruise control switch. From then on, the Engine ECU controls the vehicle speed at that speed constantly.
	1CD-FTV Engine	When the cruise control switch is kept pushed to the RES/ACC side while the vehicle is running in the cruise control mode, the Engine ECU increases the injection volume by regulating via the EDU the 4 injectors. As the vehicle continues to accelerate, Engine ECU stores the vehicle speed at the time the hand is released from the cruise control switch. From then on, the Engine ECU continues to control the vehicle at that speed.
Tap-Up Control	When the difference between the actual vehicle speed and the set speed is less than 5 km/h (3 mph), the set speed can be increased approx 1.6 km/h (1 mph) each time by operating the RES/ACC switch quickly within approx 0.5 seconds.	
Coast Control	1AZ-FSE Engine	When the cruise control switch is kept pushed to the SET/COAST side while running in the cruise control mode, the throttle control motor is energized in the throttle closing direction. The vehicle keeps decelerating the Engine ECU stores the vehicle speed when the hand is released from the cruise control switch. From then on, the Engine ECU controls the vehicle speed at that speed constantly.
	1CD-FTV Engine	When the cruise control switch is kept pushed to the SET/COAST side while the vehicle is running in the cruise control mode, the Engine ECU decreases the injection volume by regulating via the EDU the 4 injectors. As the vehicle continues to decelerate, the Engine ECU stores the vehicle speed at the time the hand is released from the cruise control switch. From then on, the Engine ECU continues to control the vehicle at that speed.

(Continued)

Tap-Down	When the difference between the actual vehicle speed and the set speed is less than 5 km/h (3 mph), the set speed can be lowered approx. 1.6 km/h (1 mph) each time by operating the SET/COAST switch quickly within approx. 0.5 seconds.
Resume Control	After the cruise control mode is cancelled by any of the cancel switches, the mode can be resumed and controlled at the set speed by operating the cruise control switch in the RES/ACC direction providing that the vehicle speed has not dropped below the low speed limit [approx. 40 km/h (25 mph)]. The mode cannot be resumed if the vehicle speed once drops below the low speed limit, because the speed in the memory is cleared.
Manual Cancel Control	If any of the following signals is sent to the Engine ECU while the vehicle is running in the cruise control mode, the cruise control mode is cancelled accordingly. ● Stop light switch ON signal (Depress the brake pedal) ● Clutch switch ON signal (Depress the clutch pedal)/for Manual Transaxle ● Transmission Control Switch UP and DOWN Signal/for Automatic Transaxle ● CANCEL switch ON signal ● MAIN switch OFF signal
Automatic Cancel Control	When any of the following conditions occur during cruise control driving, the speed that is set in the memory is cleared to cancel the cruise control mode. Furthermore, the cruise main indicator light blinks until the MAIN switch is turned OFF, and the operation of the cruise control is disabled until the MAIN switch is turned ON again. ● Stop light switch open or short circuit ● The vehicle speed signal is not set for a predetermined period of time (approx. 140 msec.) ● ETCS-i malfunction (for 1AZ-FSE Engine) ● Common-rail Type Diesel EFI system malfunction (for 1CD-FTV Engine) ● During VSC operation [with Brake Control (ABS with EBD, Brake Assist, TRC, VSC)]
	When the following condition occur during the cruise control driving, the speed that is set in the memory is cleared to cancel the cruise control mode. Furthermore, the cruise main indicator light blinks until the MAIN switch is turned OFF, and the operation of the cruise control is disabled until the ignition switch is turned OFF again. ● Stop light switch input signal abnormal
	When any of the following conditions occurs during the cruise control driving, the set speed in the memory is cleared to cancel the cruise control mode. Cruise control can be resumed at the set speed by operating the SET or RESUME switch providing that the vehicle speed is above the lower speed limit [approx. 40 km/h (25 mph)]. ● The vehicle speed falls below the low speed limit [approx. 40 km/h (25 mph)] ● The vehicle speed drops more than 16 km/h (10 mph) below the set speed as in uphill driving
Automatic Transmission Control (for A/T)	When the vehicle is cruising uphill, there is a case where the overdrive turns off depending on the ECT control. After that, when the Engine ECU judges the end of cruising up from the accelerator pedal depressing angle, the overdrive will turn on again after about 3 seconds. Also, in case that the overdrive turns off during accelerator or resume control, it will turns on after finishing accelerator or resume control.
Diagnosis	When the Engine ECU does not receive a vehicle speed signal for a predetermined period of time during cruising, or when cruise control is cancelled (automatic cancel) by a malfunction in the cruise control switch, stop light switch or vehicle speed signal, the Engine ECU immediately blinks the cruise MAIN indicator light on the combination meter on and off 5 times to alert the driver of the system malfunction. The contents of malfunctions are coded and stored in the Engine ECU.

2. Diagnosis

When the Engine ECU does not receive a vehicle speed signal for a predetermined period of time during cruising, or when cruise control is cancelled (automatic cancel) by a malfunction in the cruise control switch, stop light switch or vehicle speed signal, the Engine ECU immediately blinks the cruise main indicator light on the combination meter on and off 5 times to alert the driver of the system malfunction. The contents of malfunctions are coded and stored in the Engine ECU.

- The DTC (Diagnostic Trouble Codes) can be accessed by connecting a hand-held tester to the DLC3 terminal or the SST (09843-18040) to the Tc and CG terminals of the DLC3 and counting the blinking of the cruise MAIN indicator light.
- A hand-held tester can be used to read 5-digit code. With the SST, 2-digit code can be read from the number of blinks of the cruise MAIN indicator light. For details, see the Avensis Repair Manual (Pub. No. RM1018E).
- The DTC listed below is used.

DTC No. (5-digit)	Detection Item	DTC No. (2-digit)	Circuit Inspection
P0500	Vehicle Speed Sensor “A”	21	Vehicle Speed Sensor Circuit Open
P0503	Vehicle Speed Sensor “A” Intermittent/Erratic/High	23	Vehicle Speed Signal Abnormal
P0571	Brake Switch “A” Circuit	52	Stop Light Switch Circuit Open or Short
P0607	Control Module Performance	54	Input Signal Abnormal

AUTOMATIC GLARE-RESISTANT EC MIRROR

■ DESCRIPTION

During nighttime driving, if a large difference in intensity exists between the surrounding light and the light entering the inside rear view mirror from the headlights behind, automatic glare-resistant EC (Electrochromic) mirror automatically reduce the reflection rate of the inside rear view mirror and thus dampens the glare on the mirror.

- This system is standard equipment of the ENTRY and MID ELEGANT grade model in Europe.
- This system uses 2 sensors that are attached onto the inside rear view mirror to detect the difference between the intensity of light entering the inside rear view mirror from the rearward.
- When the ignition switch is turned from OFF to ON, this system always turns on in the AUTO mode.

▶ System Diagram ◀

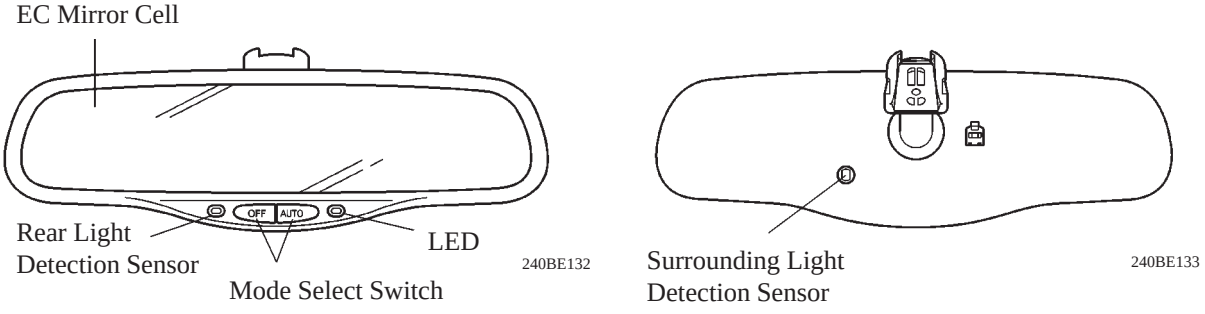

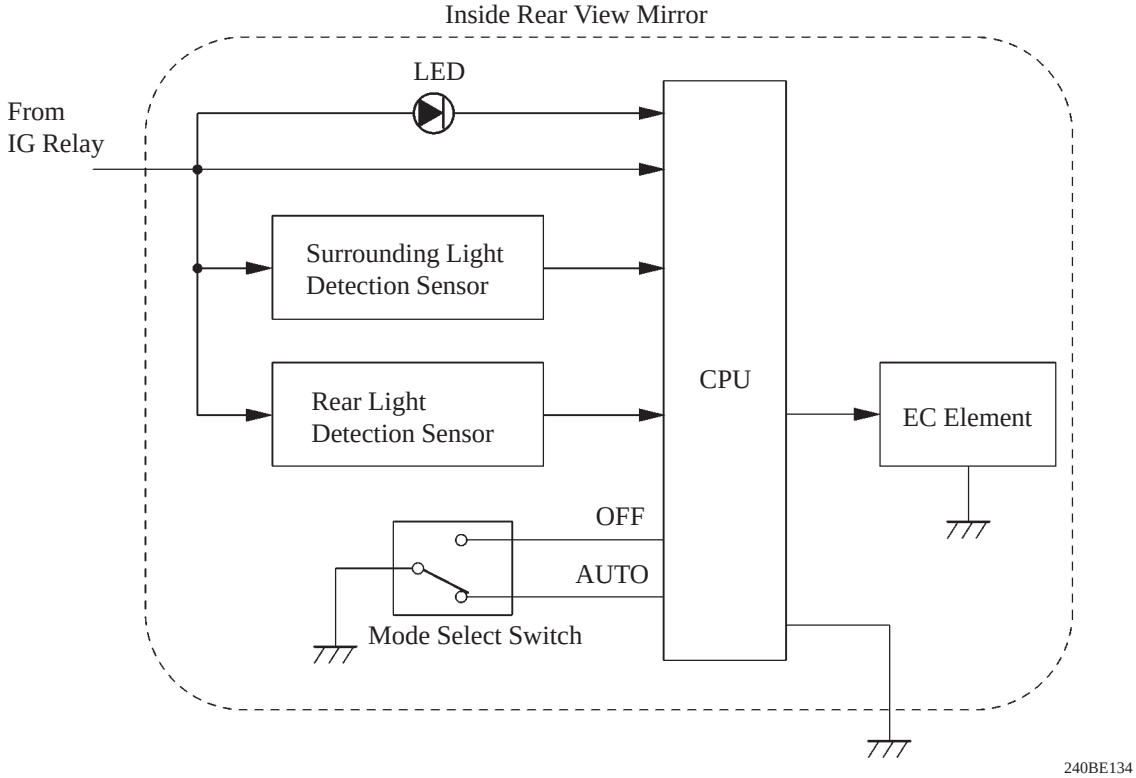

■FUNCITON OF COMPONENT

1. General

Component	Function
Surrounding Light Detection Sensor	Detect the intensity of the light surrounding the vehicle.
Rear Light Detection Sensor	Detects the intensity of the light entering the inside rear view mirror from behind the vehicle.
LED	Turns on of inform the driver during the AUTO mode is operating.
Mode Select Switch (AUTO, OFF)	Selects the inside rear view mirror control to AUTO mode AUTO OFF mode.
EC Mirror Cell	Varies the refection rate of the mirror through the function of EC element.
CPU	Controls the reflection rate in accordance with the signals from the 2 sensors.

2. EC Mirror Cell

An EC mirror cell consists of 2 layers of glass, which sandwich the EC (Electrchromic) elements in the middle. The EC elements control coloring and discoloring characteristics through their electro-chemical oxidation reduce reaction. These characteristics are utilized to electronically vary the mirror's reflection rate.

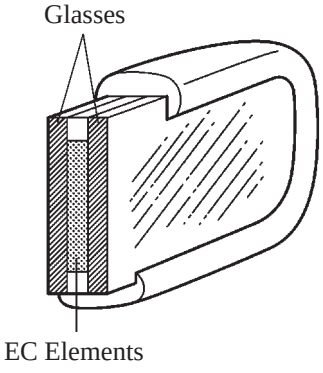

189BE55

BE

■REFLECTION RATE CONTROL

This CPU detects the surrounding light through its surrounding light detection sensor, the rear light through its rear light detection sensor, and determines whether it is day or night through the intensity of the surrounding light. At the same time, the intensity of the glare from the rear determined through the difference in intensity between the surrounding and rear light. In accordance with the intensity of the rear light, the reflection rate varies steplessly.

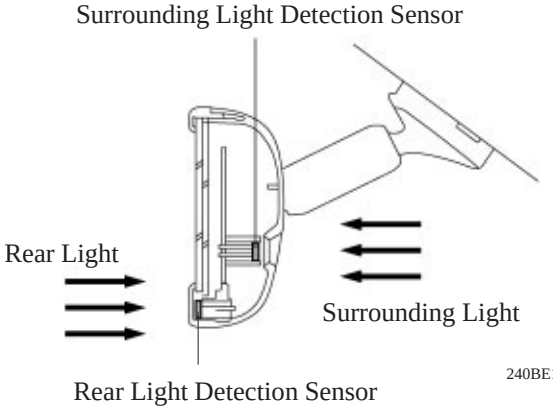

240BE135

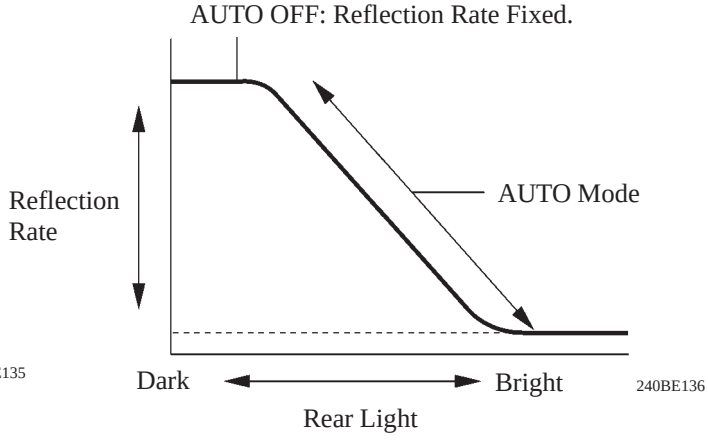

240BE136

OUTSIDE REAR VIEW MIRROR

■ DESCRIPTION

The new Avensis has an outside rear view mirror with following equipment:

Destination		Europe		General Countries
Grade		ENTRY	Others	—
Function	Electrical Remote Control	STD	STD	STD
	Manual Electrical Folding	—	STD	STD
	Front Wiper Deicer or Rear Window Defogger-Linked Mirror Heater*	—	STD	—

*: The mirror heater on the model with the front wiper deicer operates in unison with the front wiper deicer switch. Also, the mirror heater on the model without a front wiper deicer operates in unison with the rear window defogger switch. For details, see page BE-128 (front wiper deicer) or BE-129 (rear window defogger).

▶ System Diagram ◀

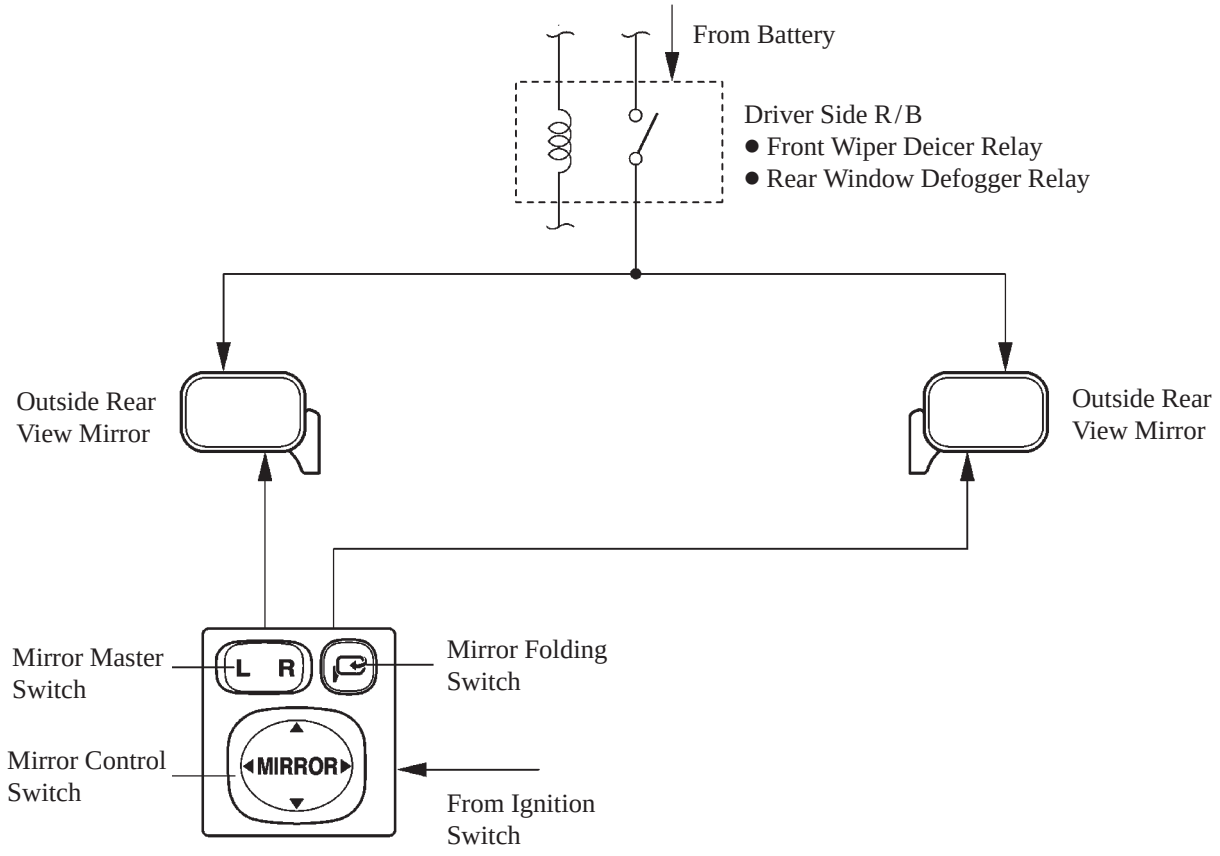

240BE137

- These functions have following outline:

Function	Outline
Electrical Remote Control	When the mirror control switch is operated, this function moves the mirror surface vertically or laterally to enable the driver to attain an optimal mirror angle. Setting the mirror master switch to the "R" position operates the right mirror, and to the "L" position operates the left mirror.
Manual Electrical Folding	This function folds the outside rear view mirrors when the mirror folding switch is pressed.
Front Wiper Deicer or Rear Window Defogger-Linked Mirror Heater	This function also automatically turns ON the mirror heater when the front wiper deicer switch or rear window defogger switch is turned ON. After 15 minutes have elapsed from the time this function has been activated, the front wiper deicer or rear window defogger turns OFF automatically, and the mirror heater also turns OFF.

FRONT WIPER DEICER SYSTEM

■ DESCRIPTION

The front wiper deicer system uses the heater wire in the front windshield glass to deice frozen front wipers.

- This system is optional equipment of the LHD model in Europe and cannot provide of the other models.
- The circuit of this system, which is shared with the outside rear view mirror heater system, operates in the same manner.
- This system is activated when the ignition switch is turned ON, and front wiper deicer switch is pushed. This switch is provided with a timer function to keep the deicer and mirror heater ON for approx. 15 minutes.

▶ System Diagram ◀

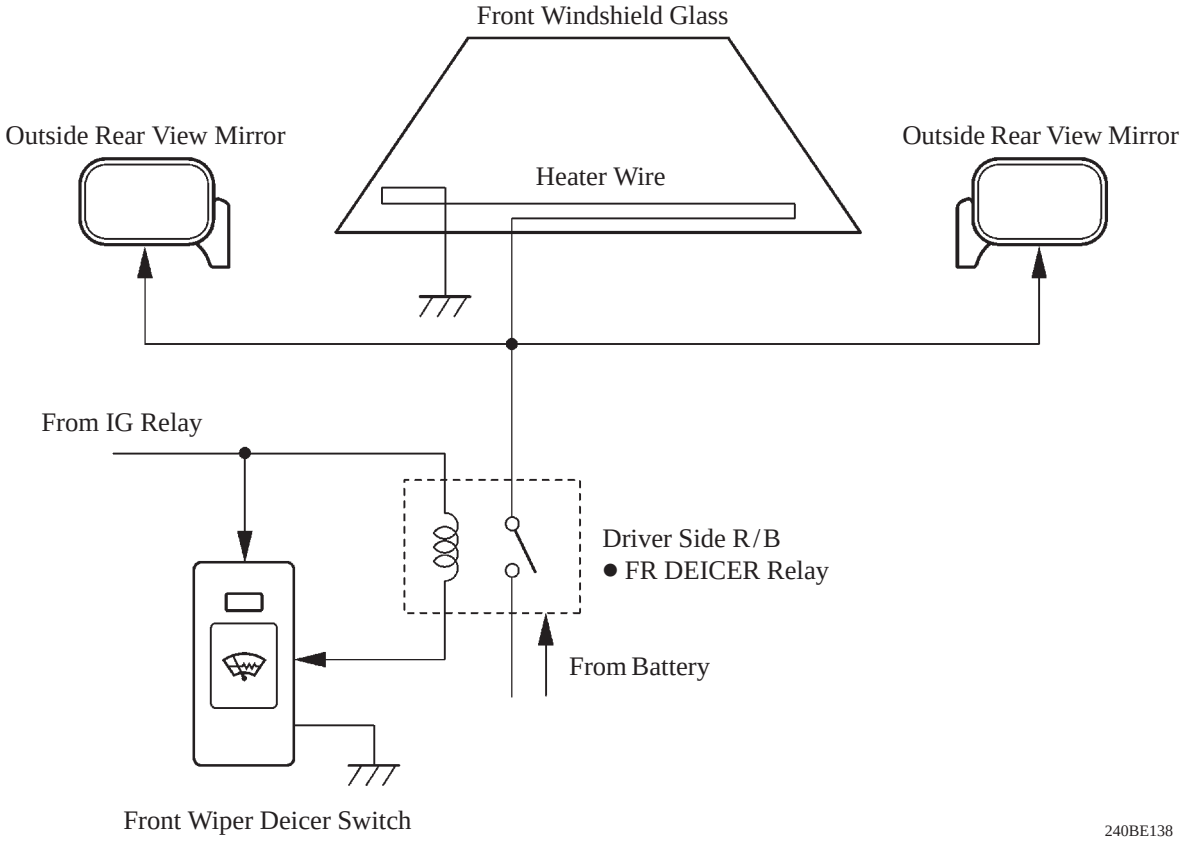

REAR DEFOGGER SYSTEM

■ DESCRIPTION

The rear defogger system uses the heater wire in the rear windshield glass to defog the rear windshield glass.

- This system is standard equipment on the all models.
- This circuit of this system, which is shared with the outside rear view mirror heater system, operates in the same manner. However, on the models with the front wiper deicer, the front wiper deicer causes the outside rear view mirror heater to operate.
- This system is activated when the ignition switch is turned ON, and rear defogger switch is pushed. This switch is provided with a timer function to keep the defogger and mirror heater ON for approx. 15 minutes.

▶ System Diagram ◀

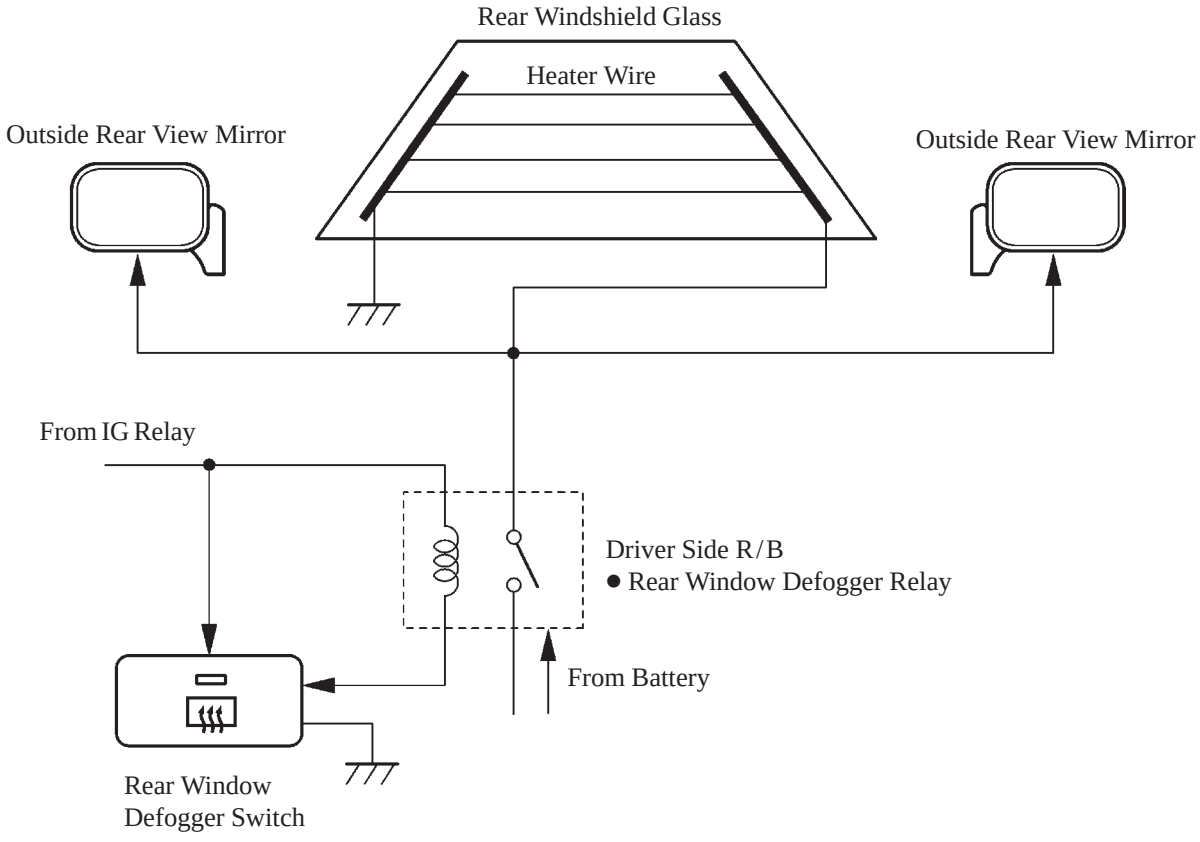

240BE139

POWER SEAT

■ DESCRIPTION

The new Avensis has a power seat with following equipment:

Destination	Europe				General Countries
Engine	1ZZ, 3ZZ, 1AZ-FE	1AZ-FSE	1CD-FTV		1AZ-FE
Grade	—	—	ENTRY	Others	—
Power Seat	—	OPT	—	OPT	—

- Driver seat has 5 (fore-and-after slide, reclining, front tilt, vertical lifter, lumbar support) adjustment functions.
- Front passenger has 2 (fore-and-after slide, reclining) adjustment functions.

▶ System Diagram ◀

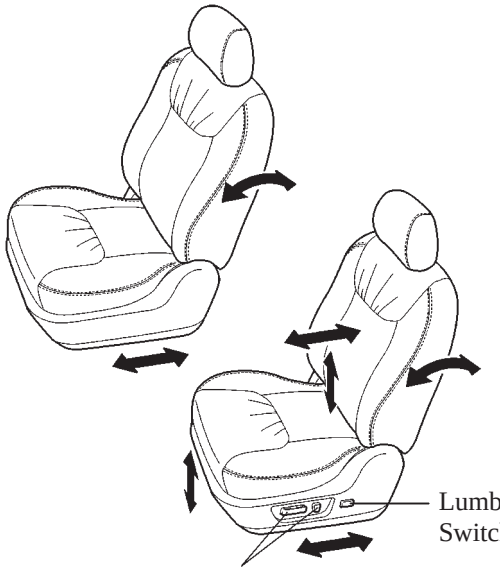

▶ Wiring Diagram ◀

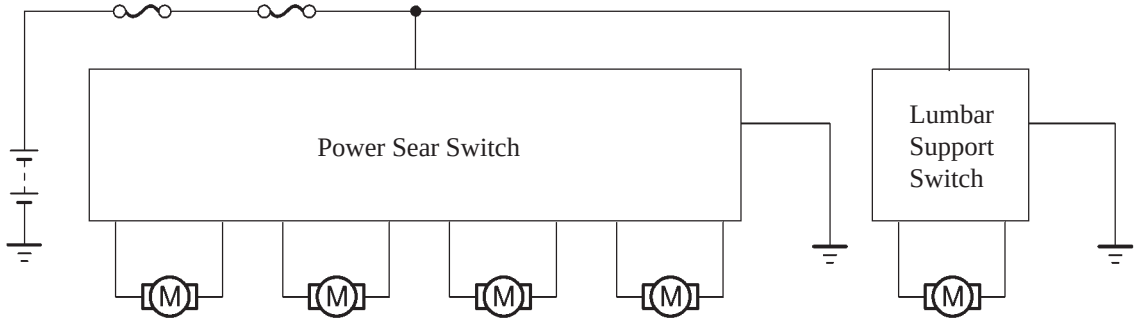

211BE41

SEAT HEATER

■ DESCRIPTION

On the new Avensis, the seat heater can steplessly adjust the temperature of the seat surface between 30°C and 40°C through the operation of a dial-type heater switch.

- A thermistor detects the temperature of the seat surface and the seat heater controller controls it.
- The seat heater for front seats is optional equipment of the LHD model in Europe and cannot provide of the other models.

▶ System Diagram ◀

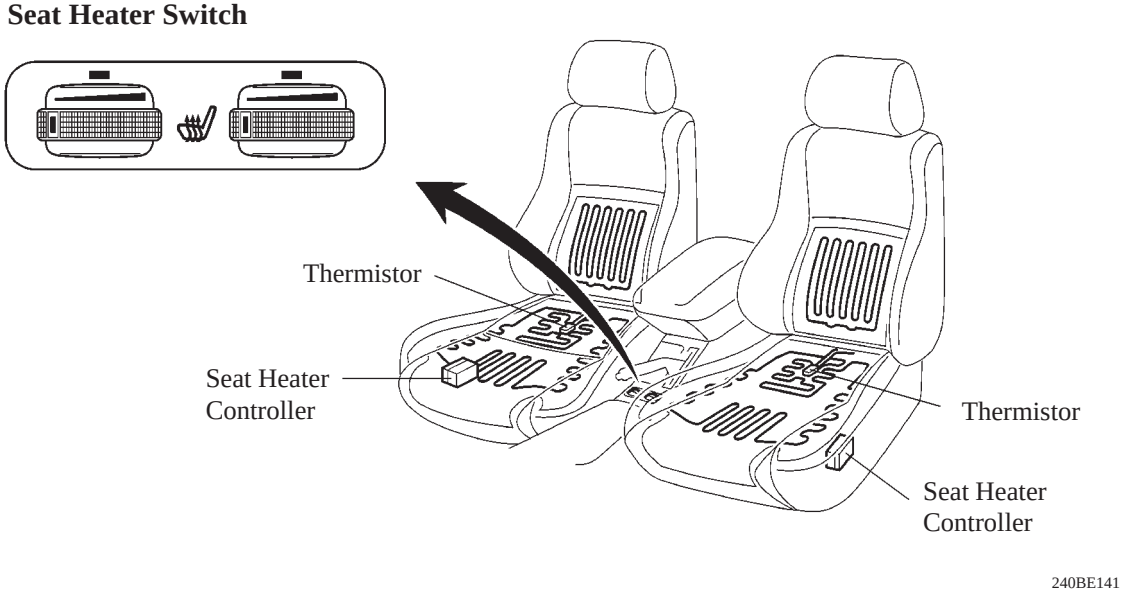

240BE141

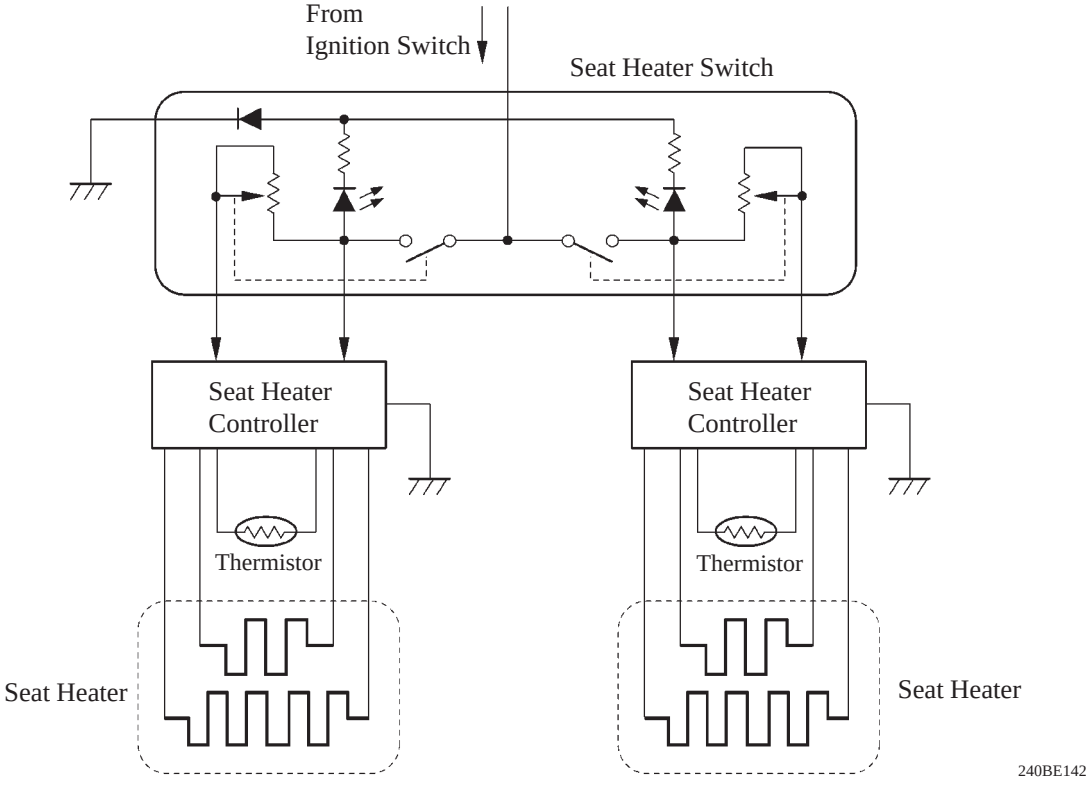

240BE142

BE

HEADLIGHT CLEANER

■ DESCRIPTION

This system sprays windshield washer fluid onto the headlights to clean the lens.

- This system is optional equipment of except ENTRY grade on the RHD model in Europe and cannot provide of the general countries model.
- This system is activated when the ignition switch is turned ON, the headlights are ON (including daytime running light operation), and headlight cleaner switch turned ON.
- This system is activated only first one time on the HID model when the ignition switch is turned ON, headlights are ON, and washer switch turned ON.

▶ System Diagram ◀

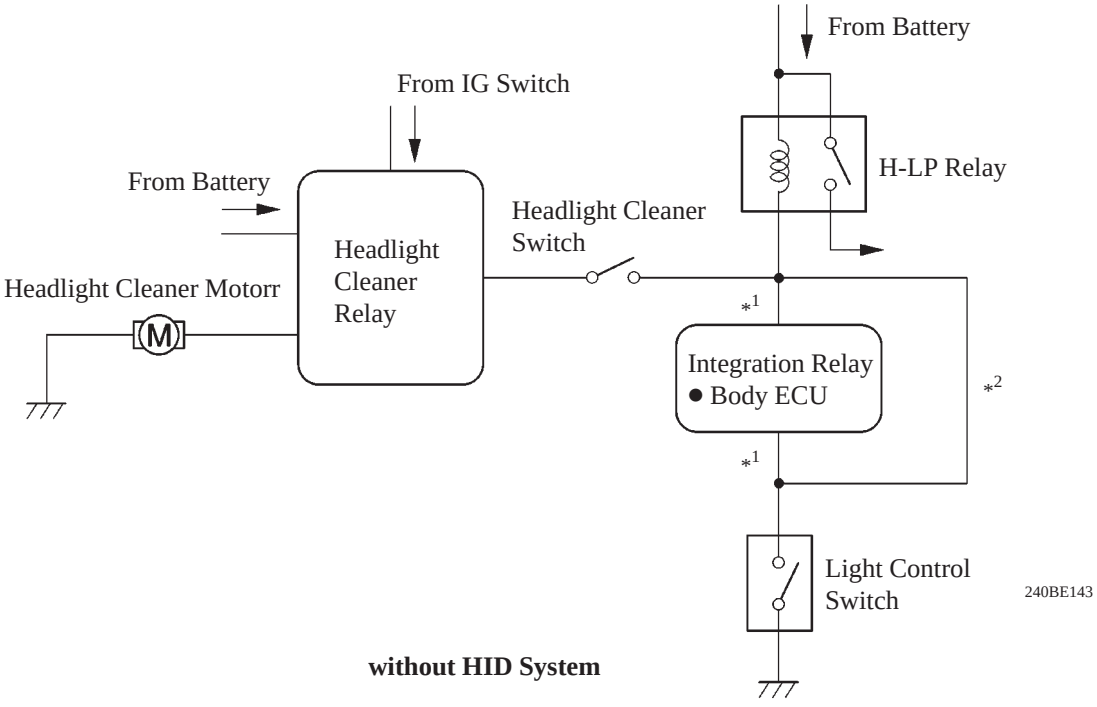

without HID System

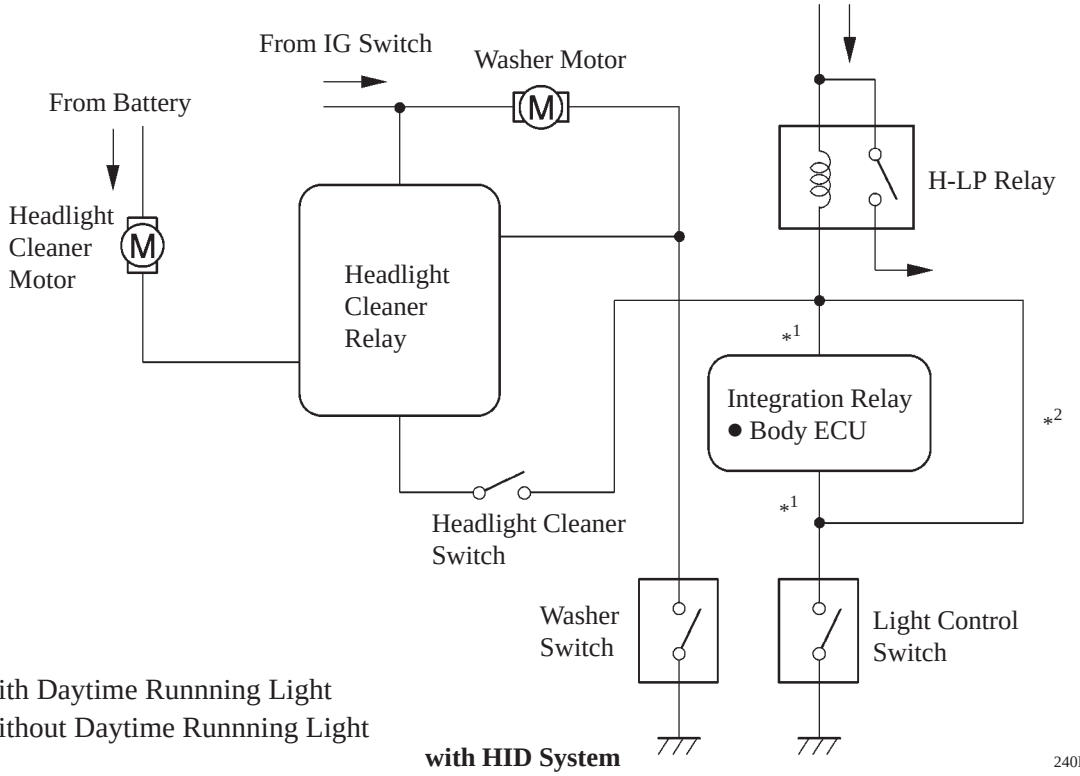

*1: with Daytime Runnning Light
*2: without Daytime Runnning Light

with HID System

240BE151

FUEL LID OPENER

■DESCRIPTION

On the new Avensis, the fuel lid opener has been changed from the wired type to the electronic type.
An emergency opener has been provided in case the system does not operate due to a discharged battery or other malfunctions.

■LAYOUT OF MAIN COMPONENT

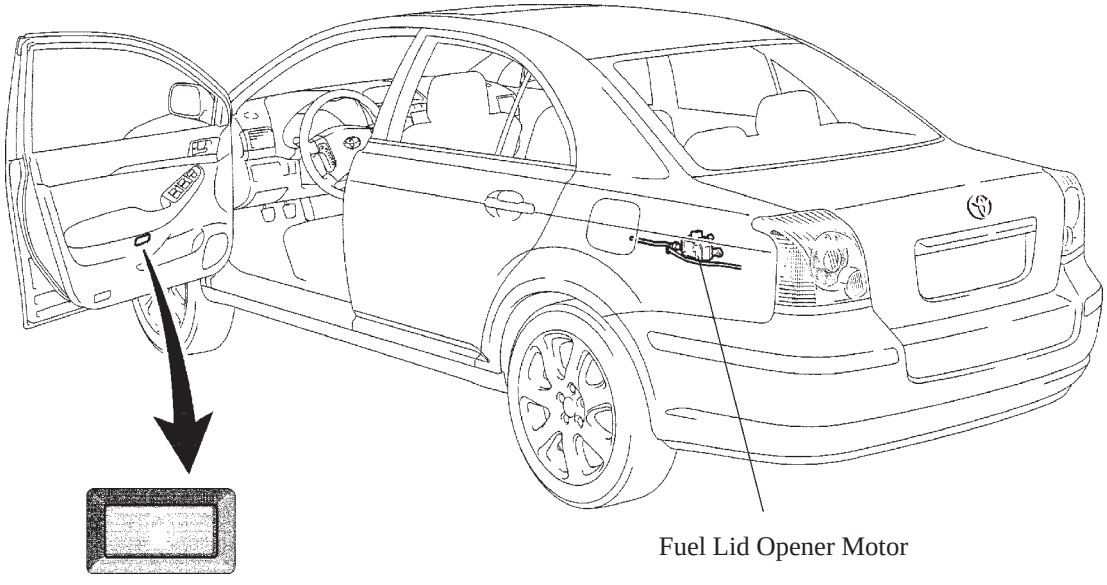

240BE144

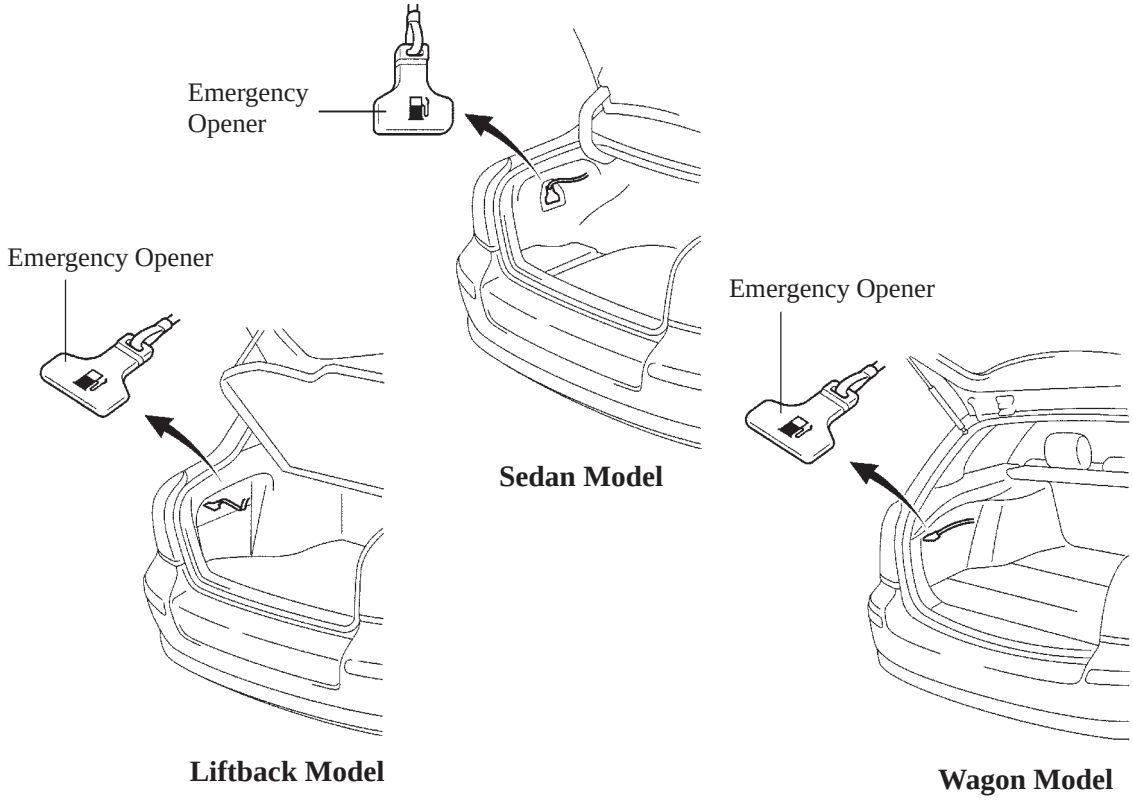

240BE145

– MEMO –

BODY

BODY STRUCTURE

■LIGHTWEIGHT AND HIGHLY RIGID BODY

High strength sheet steel is used as the following illustration in order to achieve a lightweight body.

: High Strength Sheet Steel (Internal)
: High Strength Sheet Steel

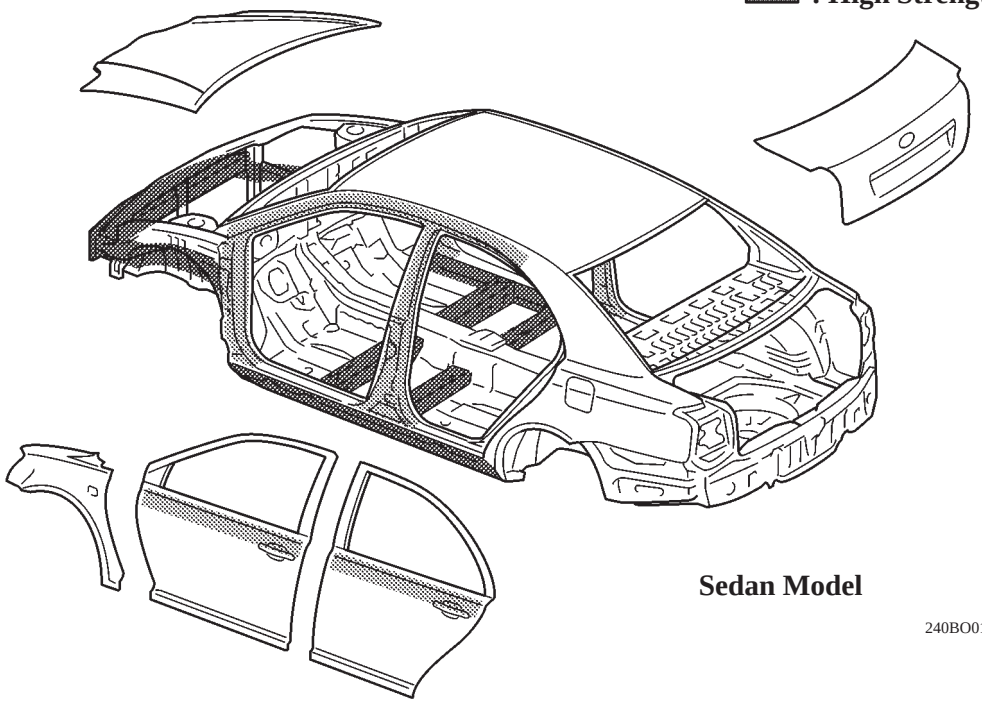

Sedan Model

240BO01

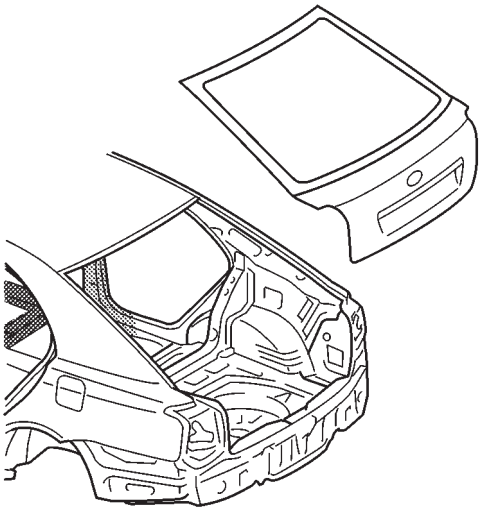

Liftback Model

240BO02

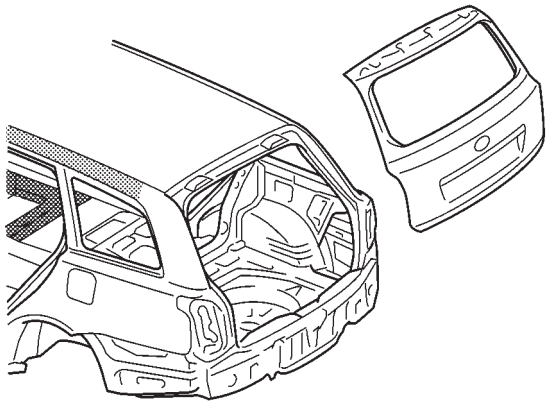

Wagon Model

240BO03

■SAFETY FEATURES

1. General

The impact absorbing structure of the new Avensis provides a construction that can effectively absorb the energy of impact in the event of a front or side collision. Also, it realizes an excellent occupant protection performance through the use of reinforcements and members that help minimize cabin deformation.

2. Impact Absorbing Structure for Frontal Collision

The front and rear doors have been adopted the structure, as shown in the illustration below. In the structure, protrusions are provided at portions “A”, “B” and “C” in order to minimize the clearance between the front pillar and the front door, and between the center pillar and the front door and between center pillar and rear door. As a result, the impact load is distributed also to the belt line, which helps minimize cabin deformation.

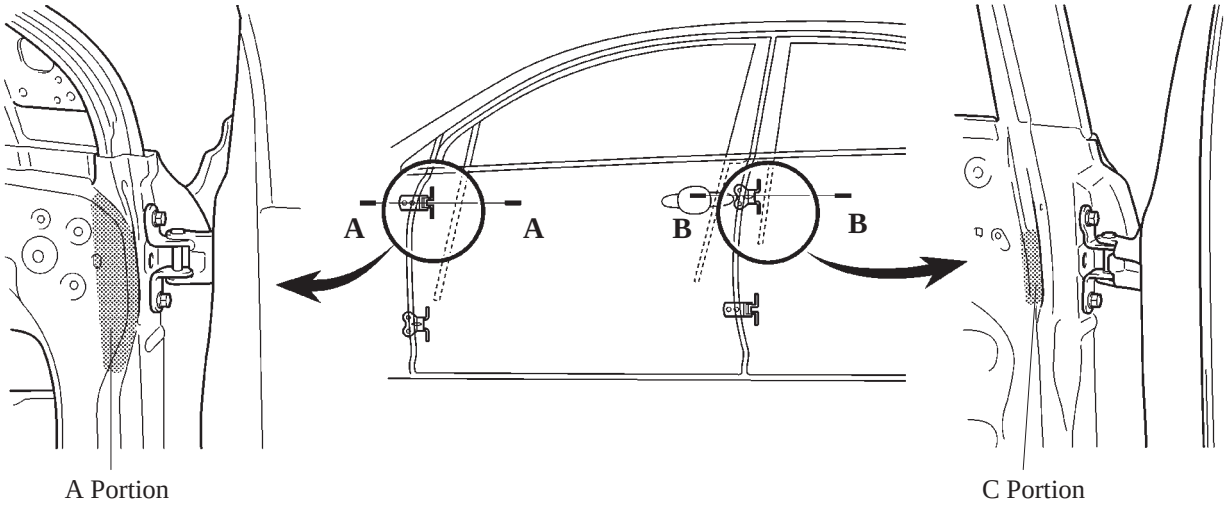

240BO04

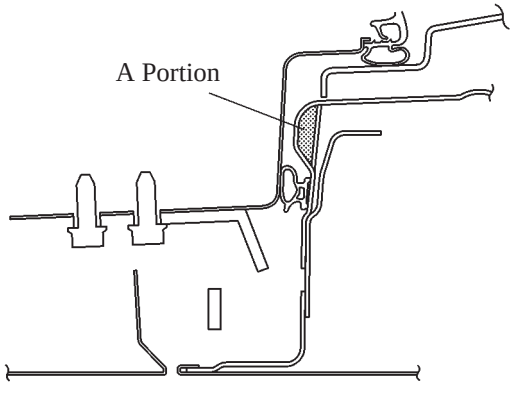

A – A Cross Section

240BO05

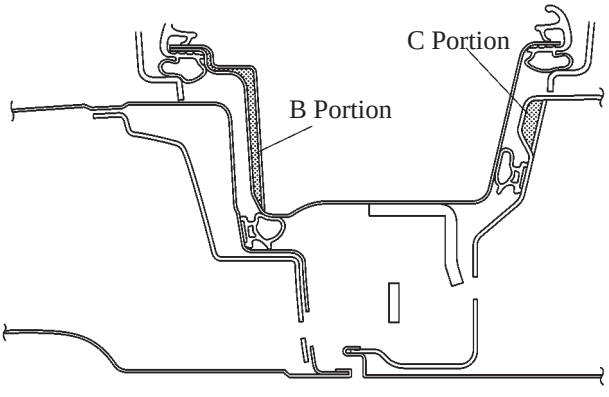

B – B Cross Section

240BO06

▶ Frontal Collision Load Distribution Diagram ◀

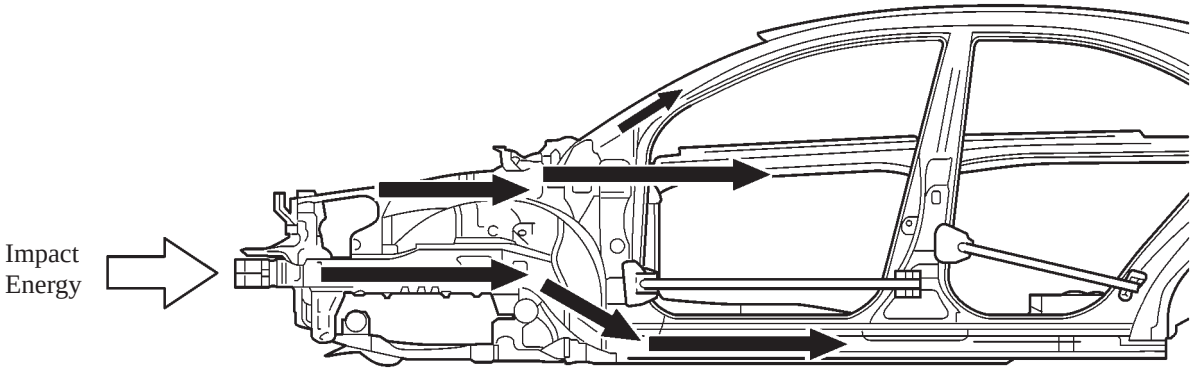

240BO07

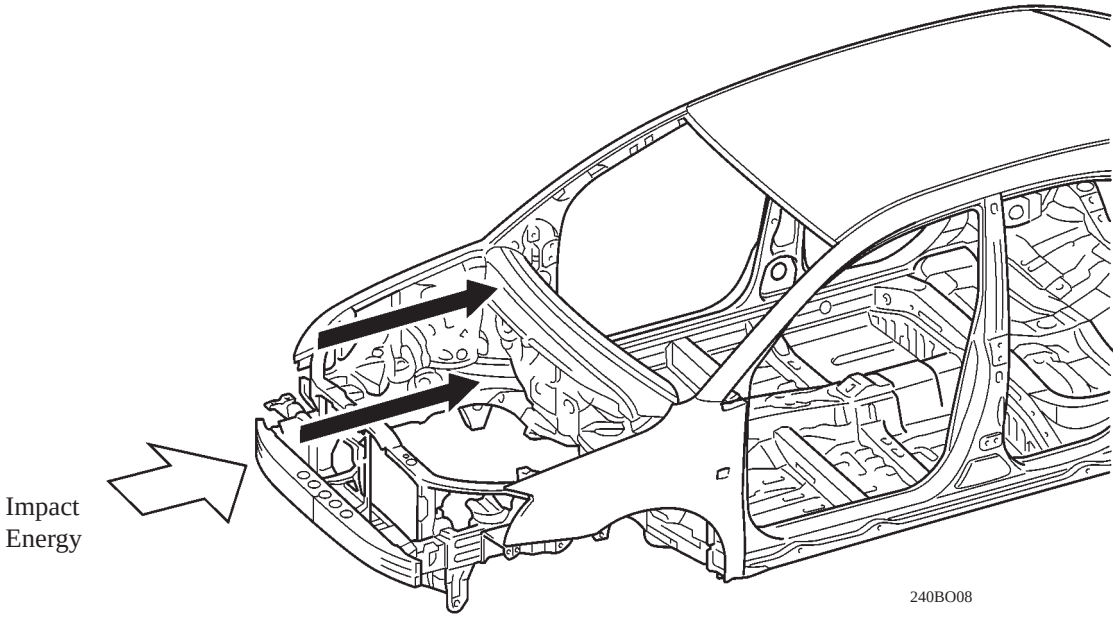

240BO08

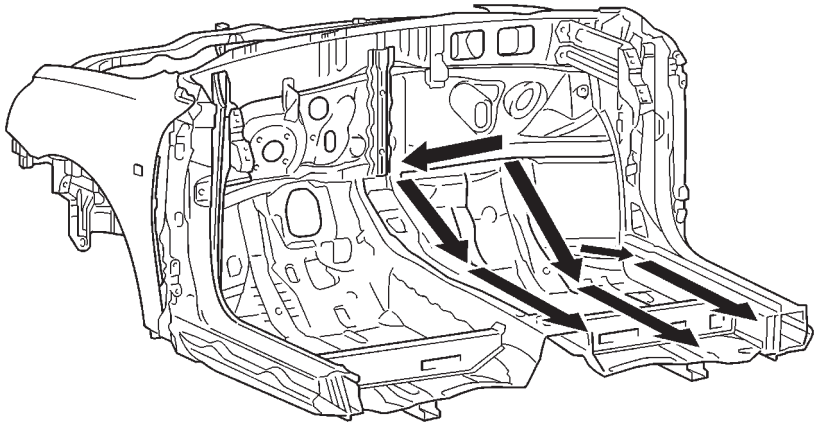

240BO09

3. Impact Absorbing Structure for Side Collision

- Impact energy of a side collision directed to the cabin area is dispersed throughout the body via pillar reinforcements, side impact protection beams, and floor cross member. This dispersion of energy helps keep the energy directed to the cabin to minimum level. In addition, the body is made highly rigid through reinforced joints and the use of high strength sheet steel in order to maintain the maximum preservation of the cabin space.

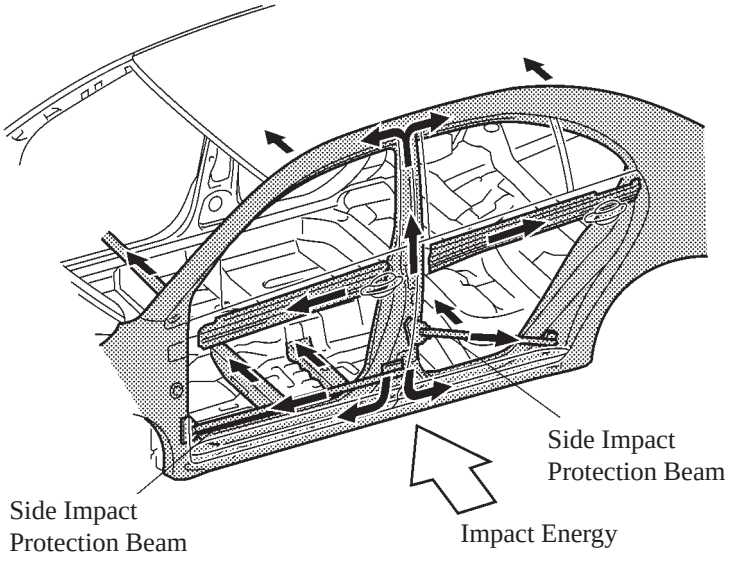

- A Head Impact Protection Structure is used. With this type of construction, if the occupant's head hits against the roof side rail and pillar in reaction to a collision, the inner ribs of the roof side rail and pillar collapses to help reduce the impact.

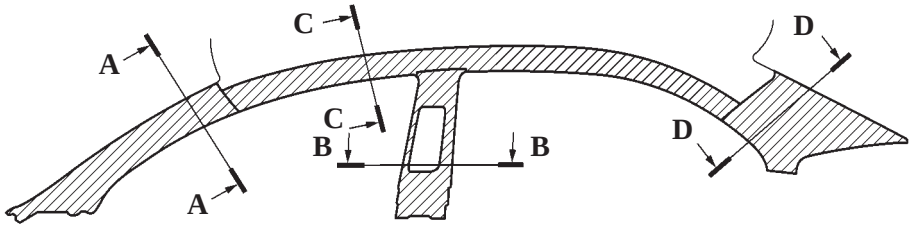

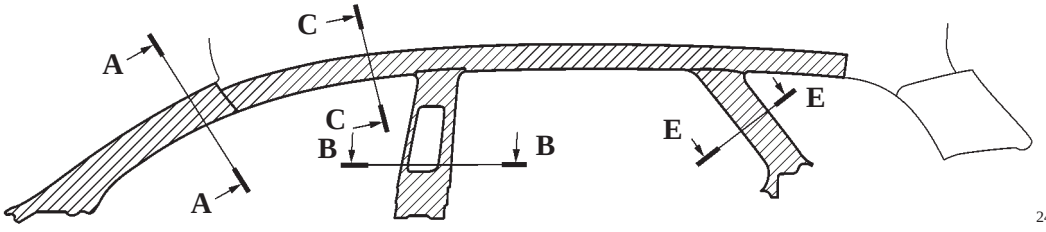

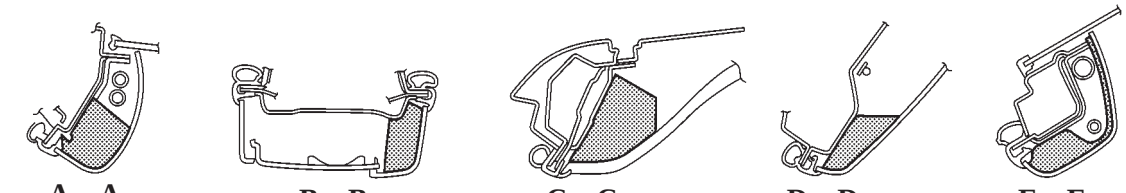

■RUST-RESISTANT BODY

1. General

Rust-resistant performance is enhanced by extensive use of anti-corrosion sheet steel, as well as by an anti-corrosion treatment, which includes the application of anti-rust wax, sealer and anti-chipping paint to easily corroded parts such as the hood, doors, and rocker panels.

2. Anti-Corrosion Sheet Steel

Anti-corrosion sheet steel is used as the following illustration.

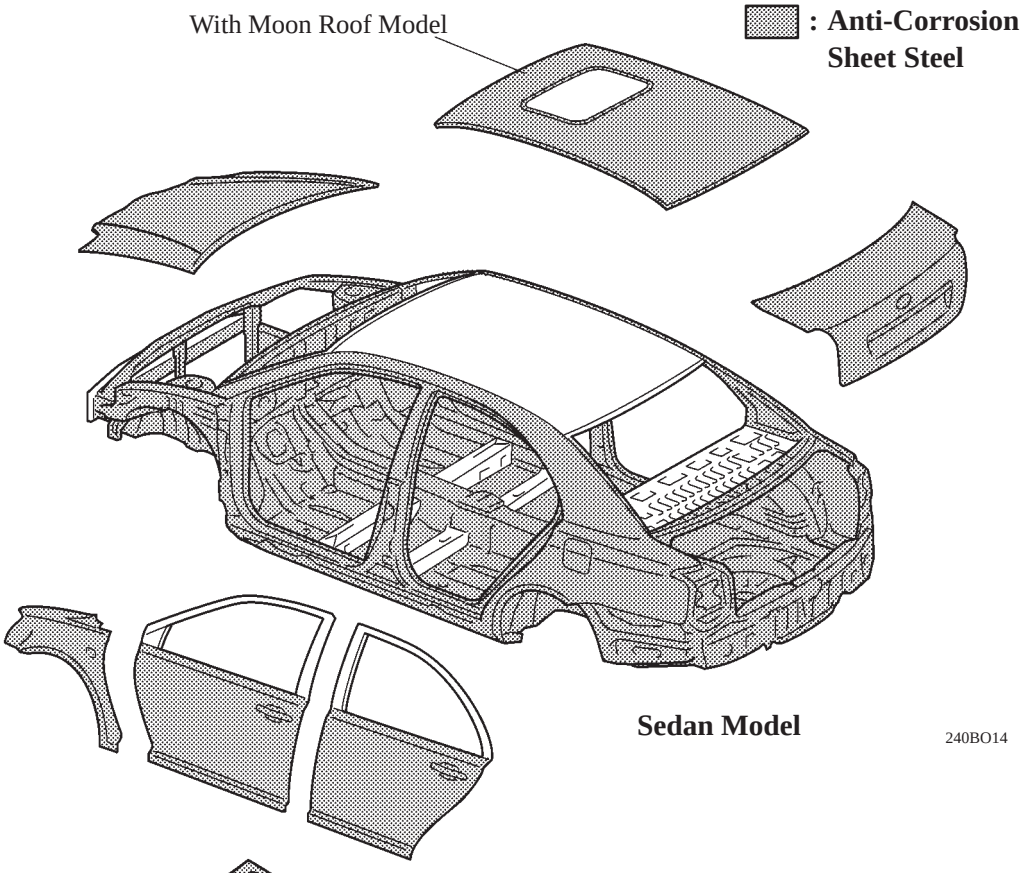

Sedan Model

240BO14

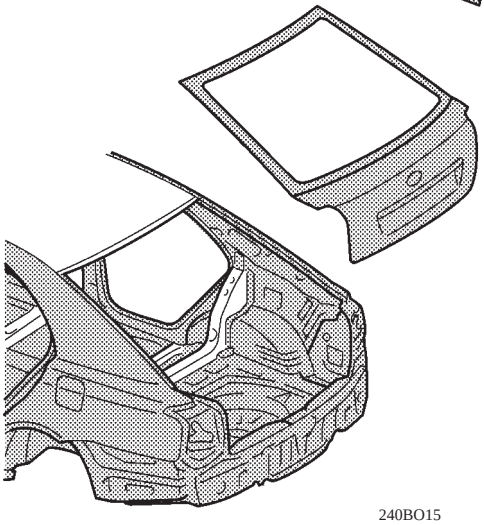

240BO15

Liftback Model

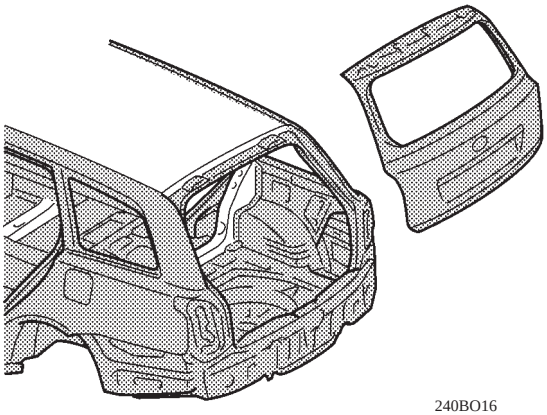

240BO16

Wagon Model

3. Under Coat

PVC (Polyvinyl Chloride) is applied to the underside of the body, other parts that locate to be affected by stone chipping damage, thus improving the rust-resistant performance of these areas.

: Edge Seal
: PVC Coating Area (Thick Coating)
: PVC Coating Area

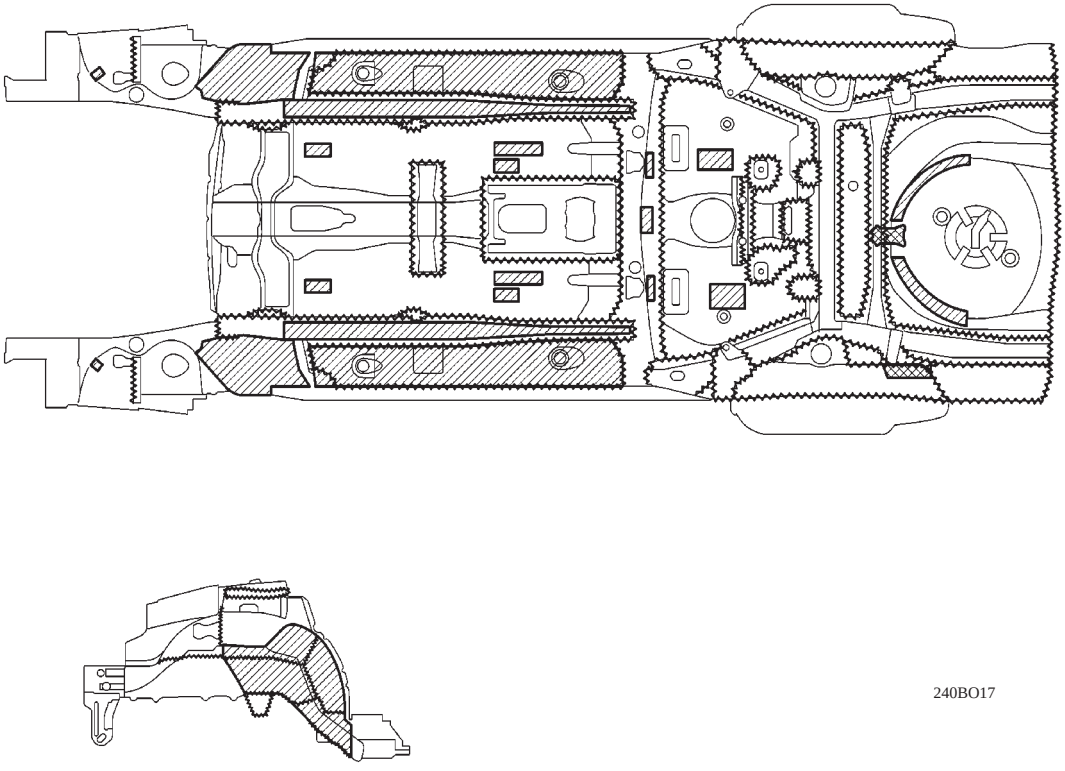

240BO17

■LOW VIBRATION AND LOW NOISE BODY

1. General

An effective application of vibration damping and noise suppressant materials reduces engine and road noise.

2. Sound Absorbing and Vibration Damping Materials

To ensure quietness in the cabin, materials that provide high sound absorption are used in the dash silencer, roof head lining, package tray trim, luggage mat, luggage side trim, and floor carpet.

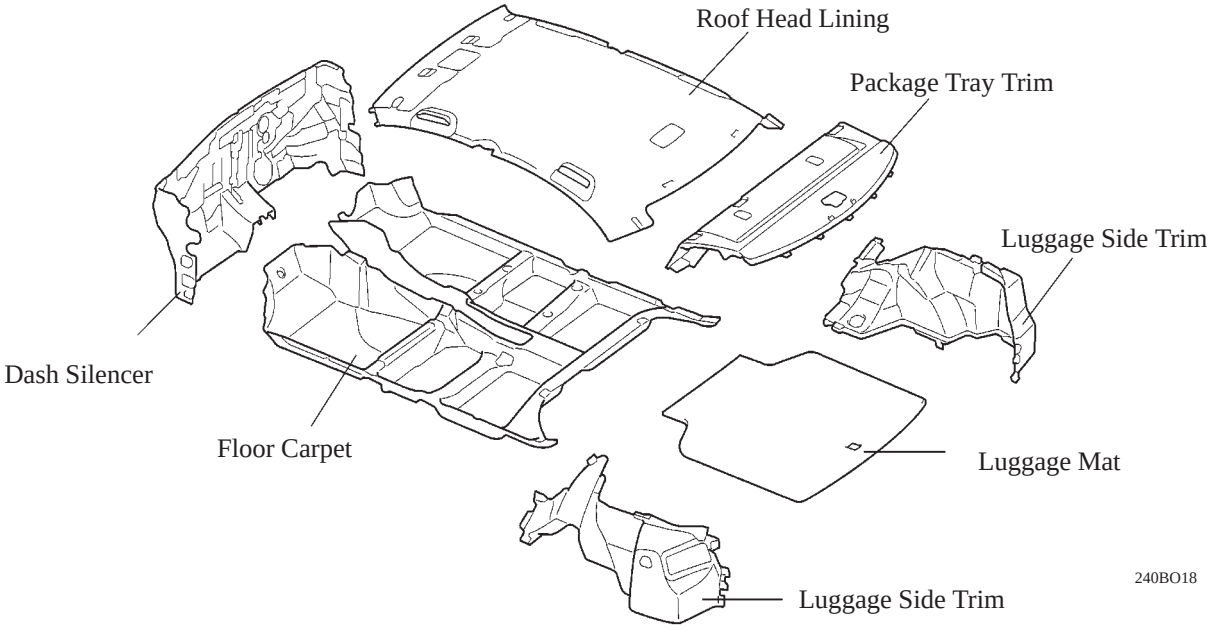

3. Reducing Wind Noise

The cowl louver and wiper arms have been optimally located to reduce wind noise from the engine hood to the front windshield.

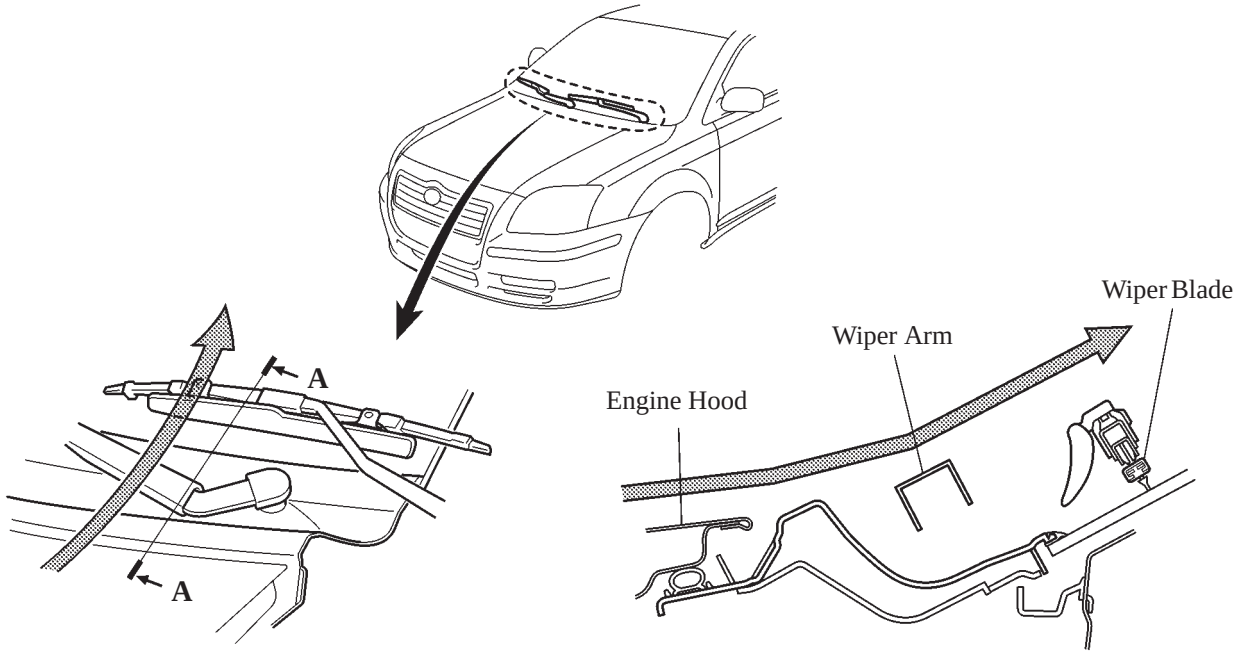

■ AERODYNAMICS

To improve aerodynamic performance, the following features have been taken.

- The engine under cover and front fender liner has been redesigned to the aerodynamically optimum shape.
- The spats and front spoiler are provided to smooth out the airflow around the tires.

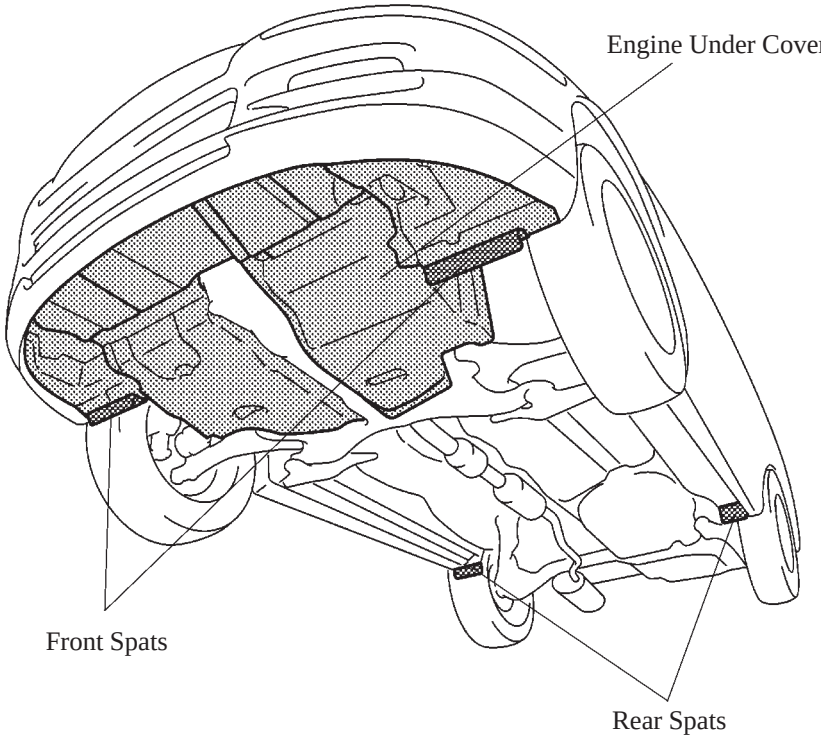

240BO22

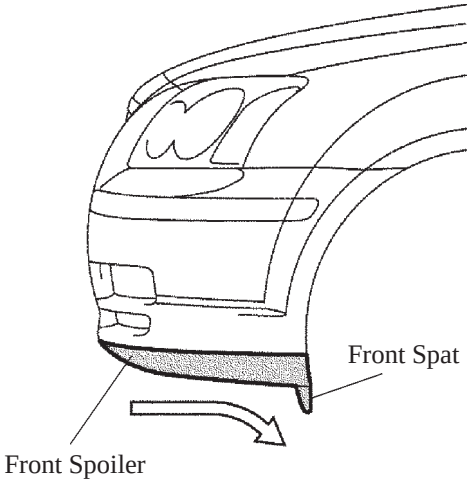

240BO23

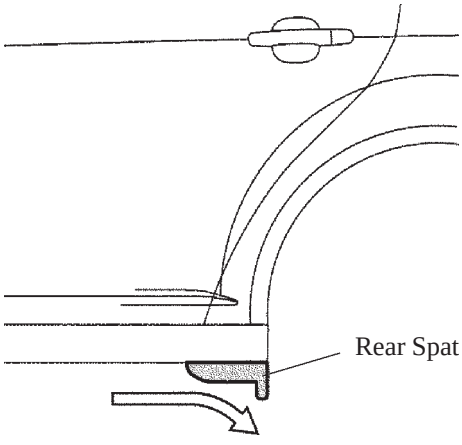

240BO24

ENHANCEMENT OF PRODUCT APPEAL

■PARTS WITH LOW REPAIR COSTS

1. Front and Rear Bumpers

- To help minimize the impact transmitted to the engine hood during a minor collision, the front bumper cover has been enlarged.

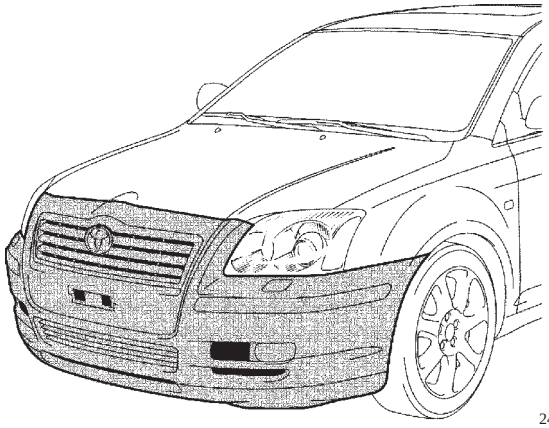

240BO25

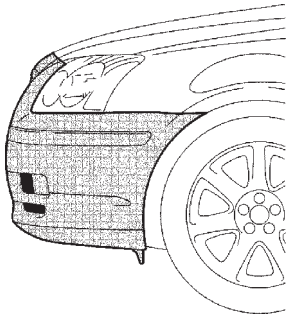

240BO26

- The front and rear bumper reinforcements, which were previously welded, have been changed to the bolt-on type, in order to facilitate repair in case of damage.
- To help minimize the impact transmitted to the body during a collision, the reinforcement arms have been made into a box shape to facilitate the absorption of the impact.

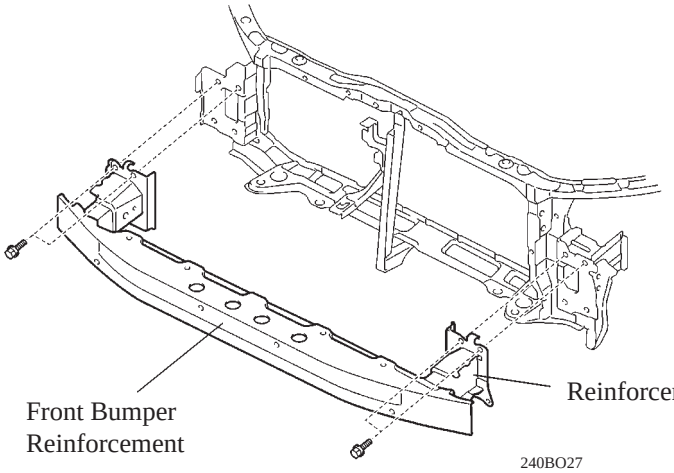

240BO27

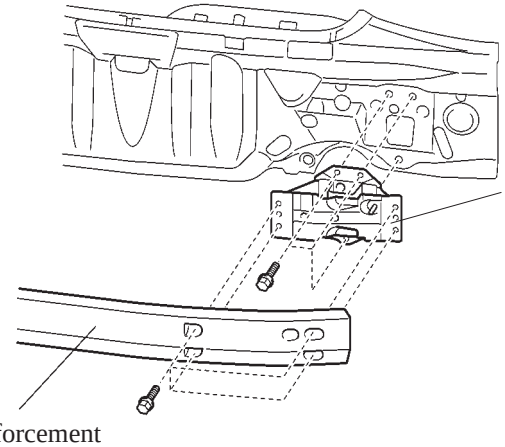

240BO28

2. Headlight

To help minimize damage to the headlight unit in case of a collision, the stays for the headlight unit have been constructed to break off. The stays are available as supply parts for low-cost repair.

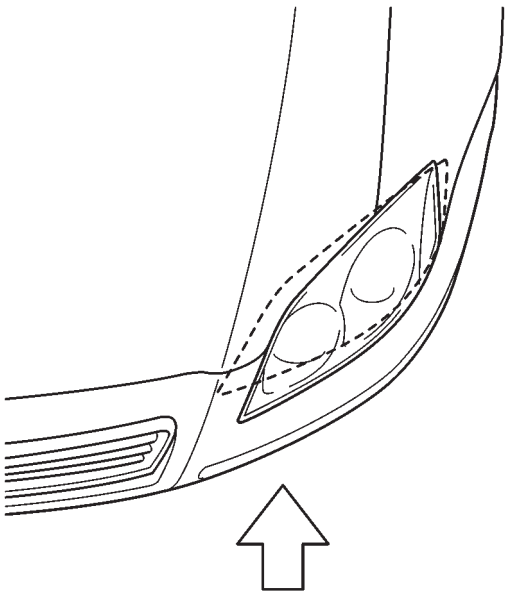

240BO29

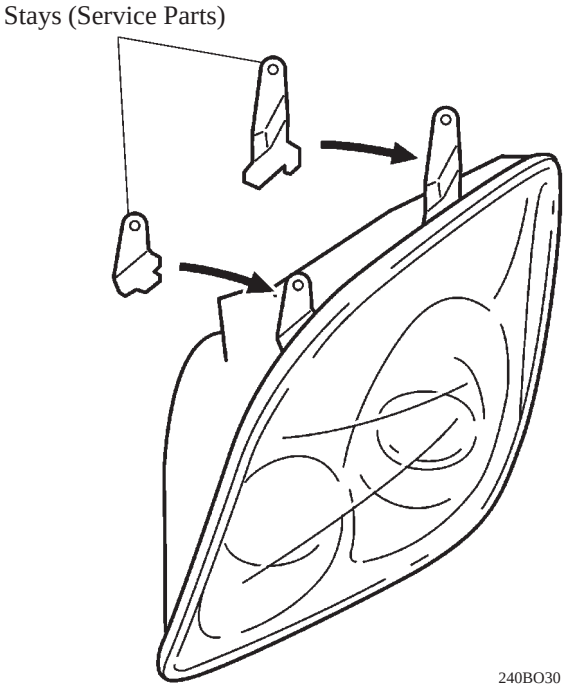

240BO30

■ SEAT BELT

1. General

Seat belts are provided with the function listed below:

Seat	Seat Belt Type	Remarks
Driver and Front Passenger	3-point ELR*1	Electrical Sensing Type Pretension and Force Limiter
Rear Passenger	3-point ELR*1 and ALR*2	–

*1: Emergency Locking Retractor
*2: Automatic Locking Retractor

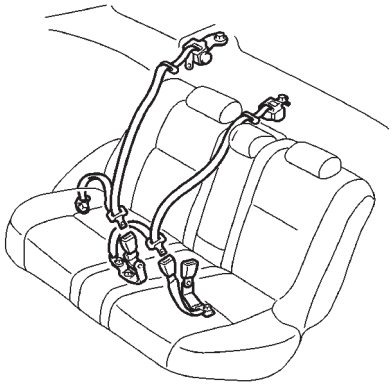

United Fixed (Sedan model)

240BO33

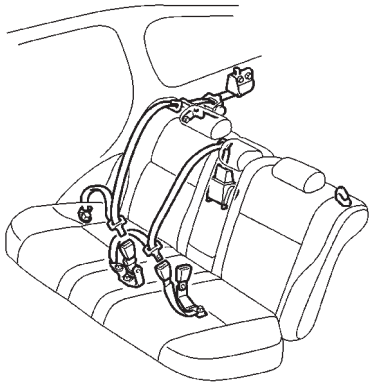

60:40 Folding Flip-Up Cushion (Liftback and Wagon Model)

240BO34

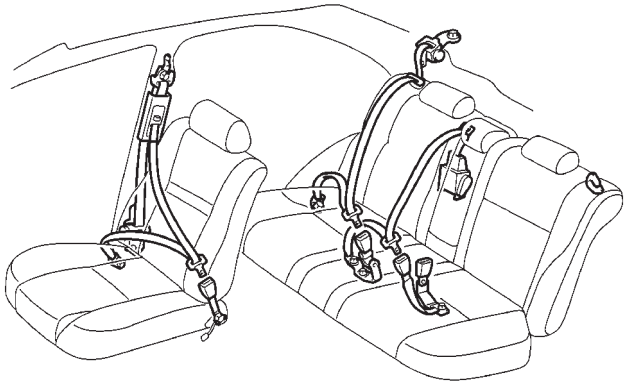

60:40 Folding (Sedan Model)

240BO32

2. Pretensioner and Force Limiter

In accordance with the ignition signal from the airbag sensor assembly, the seat belt pretensioner activates simultaneously with the deployment of SRS airbag for the driver, front passenger and knee.
In the beginning of the collision, the seat belt pretensioner instantly pulls up the seat belt thus providing the excellent belt's effectiveness in restraining the occupant.
When the impact of a collision causes the tension of the seat belt applied to the occupant to reach a predetermined level, the force limiter activates to control the force.

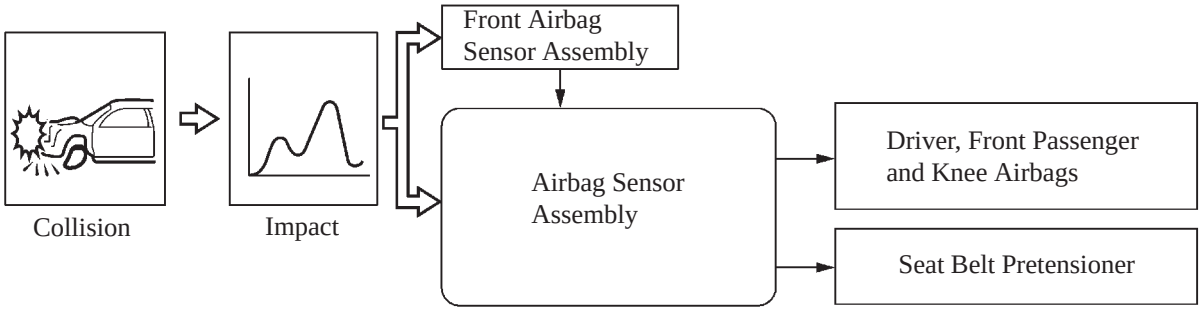

240BO35

– MEMO –

CHASSIS

CLUTCH

■ DESCRIPTION

The new Avensis has a clutch system with the following features.

- A dry, single-plate clutch operated by hydraulic pressure is used, which is matched to the performance of each engine.
- The clutch pedal has a turnover mechanism to reduce clutch pedal effort on the 1AZ-FE, 1AZ-FSE and 1CD-FTV engine models.
- The 1CD-FTV engine model has an inline accumulator in the pipe to the clutch. In this application, the accumulator reduces the vibration that is transmitted to the clutch pedal.
- A flywheel damper is used to reduce the noise and vibration of the drive train on the 1CD-FTV engine.

The following describes the changes from the previous model to the new model:

- The clutch master cylinder changed of the cylinder body and piston materials. (Aluminum → Plastic)
- The clutch start system has been adopted to ensure safety newly on the 1AZ-FSE and 1CD-FTV engine models in the Europe, and on the 1AZ-FE engine model in General Countries.

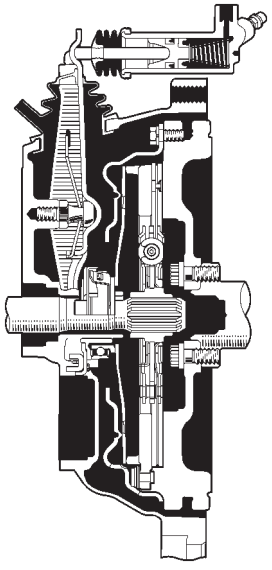

240CH01

1ZZ-FE & 3ZZ-FE Engine

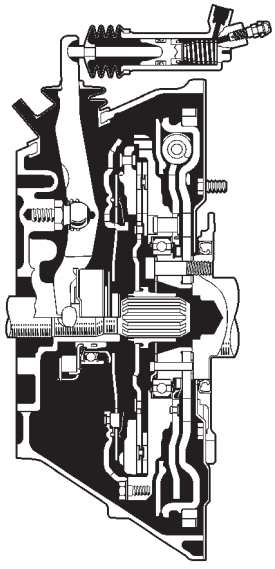

240CH03

1CD-FTV Engine

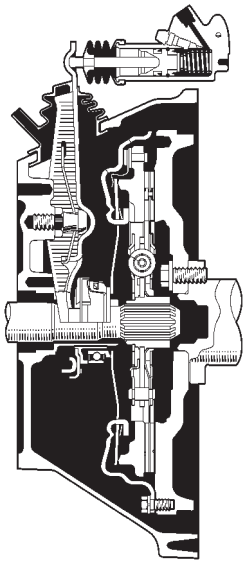

240CH02

1AZ-FE & 1AZ-FSE Engine

▶ Specification ◀

Engine Type		1ZZ-FE and 3ZZ-FE	1AZ-FE and 1AZ-FSE	1CD-FTV
Clutch	Type	Dry Type Single-Plate Clutch Diaphragm Spring	←	←
	Operation	Hydraulic	←	←
Clutch Cover	Type	DST*1	←	←
	Size mm (in.)	212 (8.35)	224 (8.82)	←
	Installed Load N	4800 (1ZZ-FE) 4300 (3ZZ-FE)	5200	7440
Clutch Disc	Facing Size*2 mm (in.)	212 x 140 x 3.3 (8.35 x 5.51 x 0.13)	224 x 150 x 3.4 (8.82 x 5.91 x 0.13)	←
	Facing Area cm^2 ($in.^2$)	199 (30.8)	217 (33.6)	←
Master Cylinder	Type	Conventional	←	←
	Cylinder Dia. mm (in.)	15.87 (0.52)	←	←
Release Cylinder	Type	Non-Adjustable	←	←
	Cylinder Dia. mm (in.)	22.2 (0.87)	20.64 (0.81)	←
Clutch Accumulator		without	without	with
Clutch Pedal		Conventional	Turnover	←
Clutch Start System		without	without*3/with*4	with

*1: DST (Diaphragm Spring Turnover)
*2: Outer Diameter x Inner Diameter x Thickness
*3: Only for 1AZ-FE engine in the Europe
*4: Only for 1AZ-FSE engine in the Europe and only for 1AZ-FE engine in General Countries

■CLUTCH MASTER CYLINDER

A clutch master cylinder made of plastic is used to reduce weight.

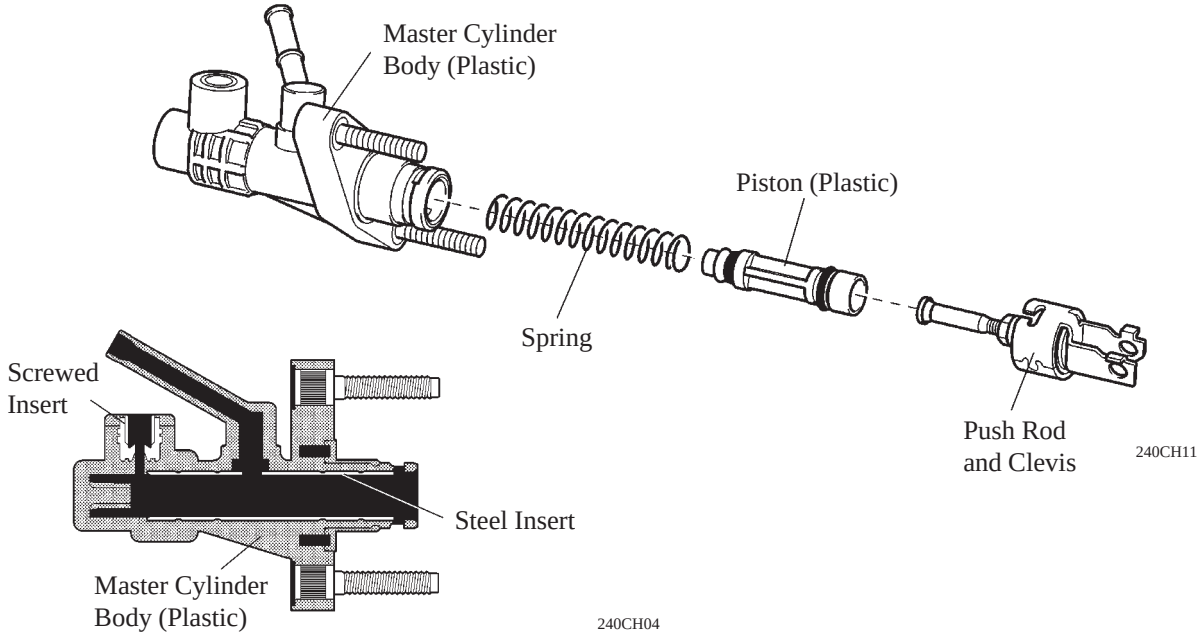

Service Tip

This master cylinder cannot be disassembled, so it must be replaced as an assembly. For details, see the Avensis Repair Manual (Pub. No. RM1018E).

■CLUTCH START SYSTEM

The system prevents the starter from cranking unless the clutch pedal is depressed. By thus preventing the engine from being started in gear, this system ensures safety by preventing the vehicle from starting off unintendedely.

▶ System Diagram ◀

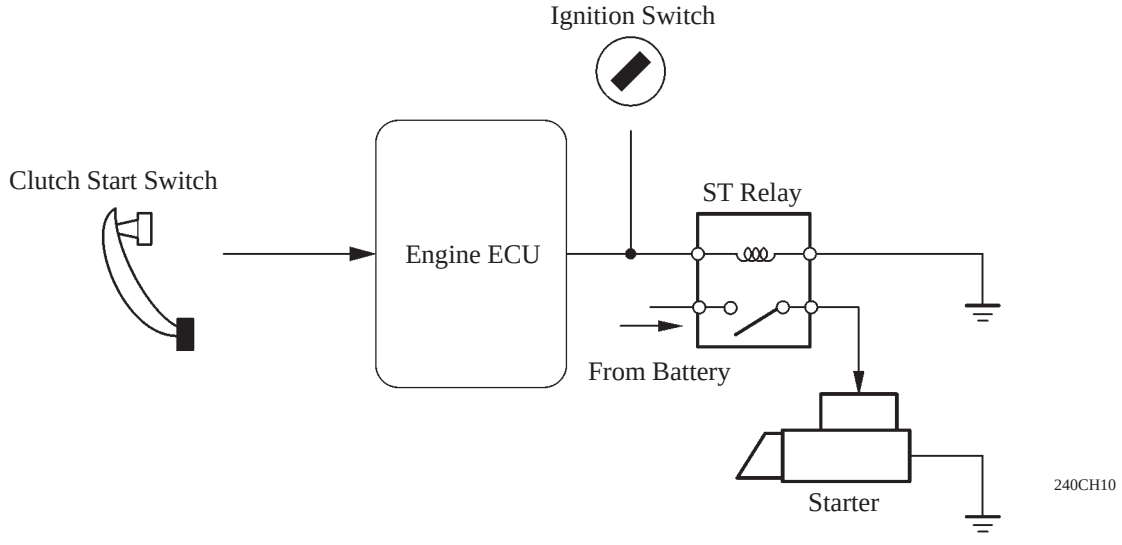

MANUAL TRANSAXLE

■ DESCRIPTION

The new Avensis has a manual transaxle with the following equipment and change:

Destination	New Model (Engine x MT)	Previous Model (Engine x MT)	Change
Europe	1ZZ-FE x C250	←	The mass damper and sliding ball bearing in the shift and select mechanism have been adopted to improve the shift feel.
	3ZZ-FE x C50	←	● The mass damper and sliding ball bearing in the shift and select mechanism have been adopted to improve the shift feel. ● Change of differential gear ratio.
	1AZ-FE x E354 1AZ-FSE x E354	1AZ-FSE x S55	Adopted newly. The basic construction and operation are the same as E351 manual transaxle on the 1CD-FTV engine in the previous model. However, It is different in terms of the following. ● The gear ratio and differential gear ratio have been changed. ● The mass damper and slide bearing in the shift and select mechanism have been adopted to improve the shift feel.
	1CD-FTV x E357	1CD-FTV x E351	Adopted newly. The basic construction and operation are the same as E351 manual transaxle. However, It is different in terms of the following. ● The gear ratio has been changed. ● The mass damper and slide bearing in the shift and select mechanism have been adopted to improve the shift feel.
General Countries	1AZ-FE x E354	3S-FE x S54	Adopted newly. The mass damper and slide bearing in the shift and select mechanism have been adopted to improve the shift feel.

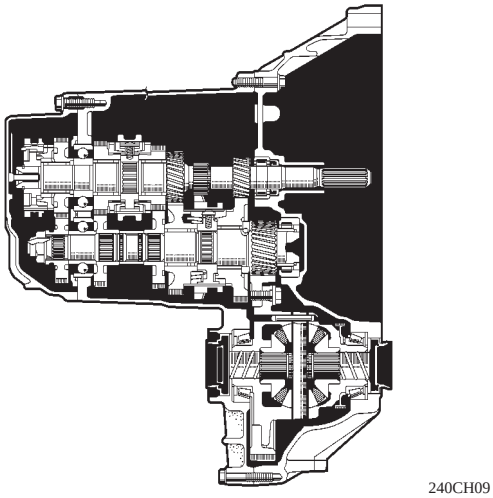

C250 (1ZZ-FE)

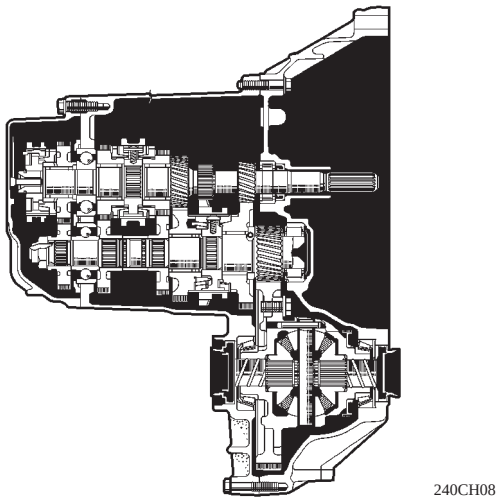

C50 (3ZZ-FE)

▶ Specification ◀

Engine x Transaxle		1ZZ-FE x C250		3ZZ-FE x C50	
Model		New	Previous	New	Previous
Gear Ratio	1st	3.545	←	←	←
	2nd	1.904	←	←	←
	3rd	1.310	←	←	←
	4th	1.031	←	0.969	←
	5th	0.815	←	←	←
	Reverse	3.250	←	←	←
Differential Gear Ratio		3.941	←	4.312	4.058
Oil Capacity Liters (US. qts, Imp. qts)		1.9 (2.0, 1.7)	←	←	←
Oil Viscosity		SAE 75W-90	←	←	←
Oil Grade		API GL-4 or GL-5	←	←	←
Weight (Reference)* kg (lb.)		37.0 (81.2)	36.0 (79.4)	37.0 (81.2)	36.0 (79.4)

*: Weight shows the figure with the oil fully filled.

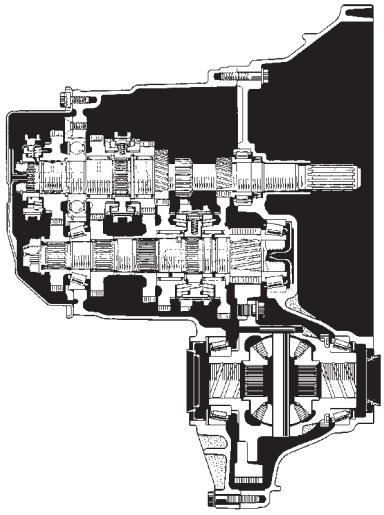

195CH27

E354 (1AZ-FE and 1AZ-FSE) and E357 (1CD-FTV)

CH

▶ Specification for Europe Model ◀

Engine x Transaxle		1AZ-FE x E354 1AZ-FSE x 354	1AZ-FSE x S55	1CD-FTV x E357	1CD-FTV x E351
Model		New	Previous	New	Previous
Gear Ratio	1st	3.538	←	←	←
	2nd	2.045	2.041	1.913	2.045
	3rd	1.333	1.322	1.258	1.333
	4th	1.028	←	0.918	0.972
	5th	0.820	←	0.690	0.731
	Reverse	3.583	3.153	3.583	←
Differential Gear Ratio		3.944*2 3.684*3	3.736	3.684	←
Oil Capacity Liters (US. qts, Imp. qts)		2.5 (2.6, 2.2)	2.2 (2.3, 1.9)	2.5 (2.6, 2.2)	←
Oil Viscosity		SAE 75W-90	←	←	←
Oil Grade		API GL-4 or GL-5	←	←	←
Weight (Reference)*1 kg (lb.)		44.0 (97.0)	41.0 (90.4)	44.0 (97.0)	44.0 (97.0)

*1: Weight shows the figure with the oil fully filled.
*2: For 1AZ-FE Engine.
*3: For 1AZ-FSE Engine.

▶ Specification for General Countries Model ◀

Engine x Transaxle		1AZ-FE x E354	3S-FE x S54
Model		New	Previous
Gear Ratio	1st	3.538	←
	2nd	2.045	2.041
	3rd	1.333	1.322
	4th	1.028	←
	5th	0.820	←
	Reverse	3.583	3.153
Differential Gear Ratio		3.944	3.736
Oil Capacity Liters (US. qts, Imp. qts)		2.5 (2.6, 2.2)	2.2 (2.3, 1.9)
Oil Viscosity		SAE 75W-90	←
Oil Grade		API GL-4 or GL-5	←
Weight (Reference)* kg (lb.)		44.0 (97.0)	41.0 (90.4)

*: Weight shows the figure with the oil fully filled.

■E354 AND E357 MANUAL TRANSAXLES

1. Transmission Gear

General

- A triple-cone type synchromesh mechanism is used for the 1st gear and 2nd gear to increase the synchronizer capacity. This helps to reduce the shifting effort and provide smoother shifting.
- A double-cone type synchromesh mechanism is used in the reverse gear to suppress gear engagement noise.

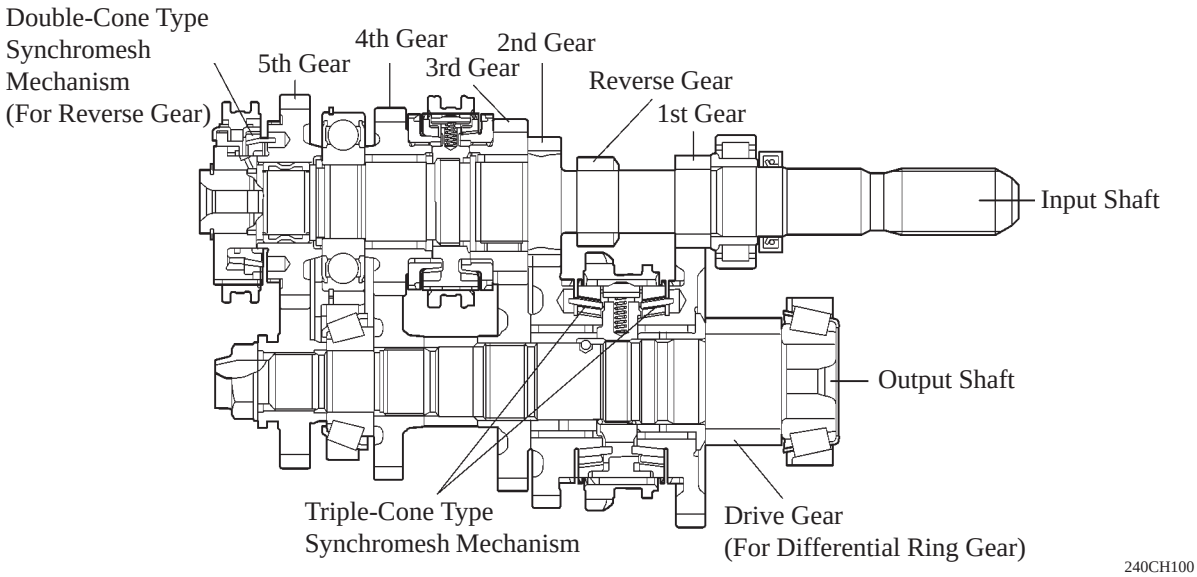

Triple-Cone Type Synchromesh Mechanism (1st and 2nd Gear)

The triple-cone type synchromesh mechanism consists of an outer ring, middle ring, inner ring and gear piece, in addition to a clutch hub, shifting keys and a hub sleeve. The outer ring and inner ring, together with the clutch hub, shifting keys and a hub sleeve, always turn in unison with the transmission output shaft. The middle ring, together with the gear piece, always turns in unison with the transmission gear.
During shifting, the shifting keys push against the outer ring and middle ring, the middle ring and inner ring, and the inner ring and gear piece, thus causing a synchronizing action and permitting the gear piece and hub sleeve to engage smoothly.

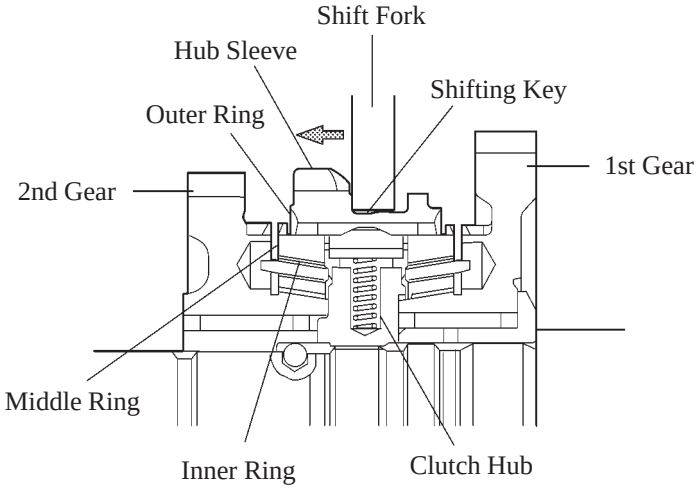

Double-Cone Type Synchromesh Mechanism (Reverse Gear)

When shifting to the reverse position, the hub sleeve is pushed to the left side (see illustration) thereby pushing the pull ring to the left also. The pull ring pulls the inner ring to the left thereby synchronizing the transmission for smoothly engagement of the reverse idle gear.
However, when the 5th synchronizer is activated, synchronization is achieved only by the middle and outer rings.

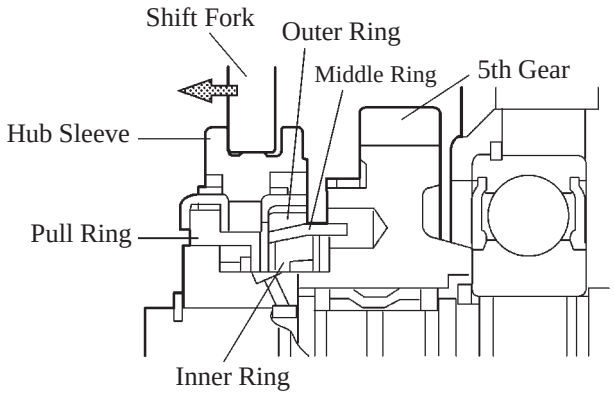

181CH07

2. Shift and Select Mechanism

The shift feel has been improved the adoption of the mass damper on the shift and select shaft, and sliding ball bearing.

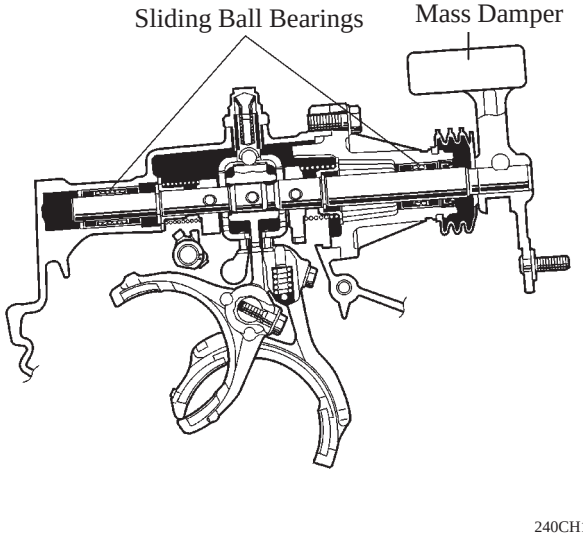

240CH12

C50 and C250

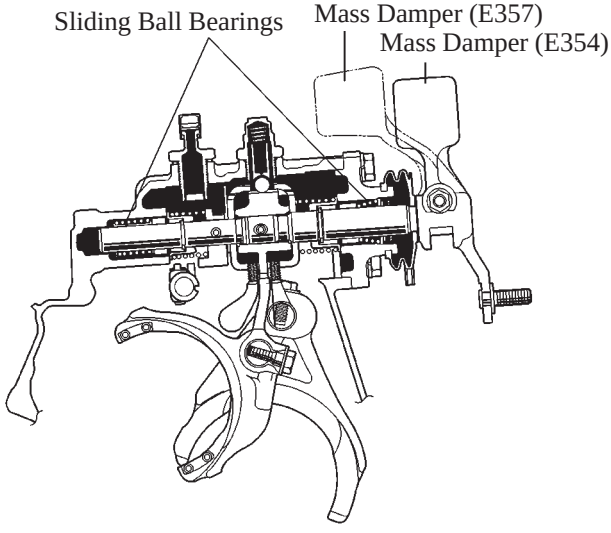

240CH13

E354 and E357

AUTOMATIC TRANSAXLE

■DESCRIPTION

The new Avensis line-up has an automatic transaxle with the following equipment:

Destination	New Model (Engine x AT)	Previous Model (Engine x AT)
Europe	1ZZ-FE x U341E	1ZZ-FE x A246E
	1AZ-FE, 1AZ-FSE x U241E	1AZ-FSE x U240E
General Countries	1AZ-FE x U241E	3S-FE x A241E

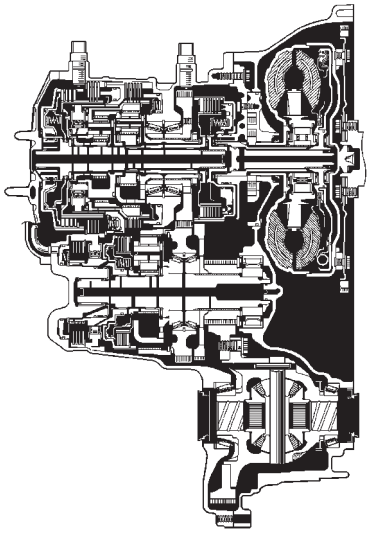

181CH09

U241E

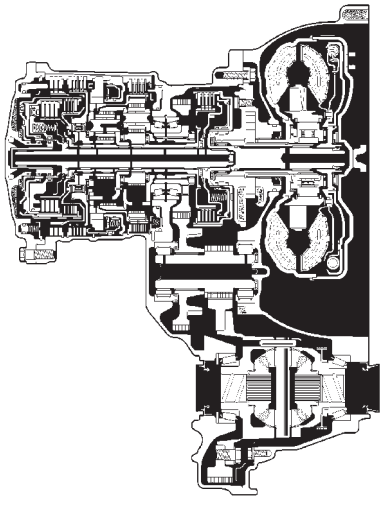

169CH13

U341E

The multi-mode automatic transmission has been adopted on the U241E and U341E automatic transaxles.

- Multi-mode automatic transmission can switch in the S position by means of signals from the transmission control switch (+: UP shift range switch and –: DOWN shift range switch).
- The transmission control switch has a gate type shift lever S position. When the driver moves the shift lever forward, the shift range changes.
  Multi-mode automatic transmission is first and foremost for switching the gear range; it is not for fixing the gear.

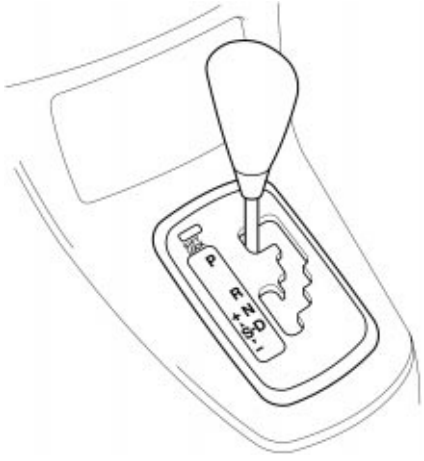

240CH41

■U241E AUTOMATIC TRANSAXLE

1. General

The compact and high-capacity 4-speed U241E automatic transaxle [Super ECT (Electronic Controlled Transaxle)] is used.
The following chart describes the changes from the previous model.

Destination	New Model	Previous Model	Change (from previous model)
Europe	U241E	U240E	The basic construction and operation are the same as U240E AT on the previous model. However, the following points are different. ● The differential gear ratio has been changed. ● Multi-mode automatic transmission has been adopted. ● Shift lever with multi-mode automatic transmission has been adopted. ● DTC (Diagnostic Trouble Codes) changed.
General Countries	U241E	A241E	Adopted newly. ● Multi-mode automatic transmission has been adopted. ● Shift lever with multi-mode automatic transmission has been adopted. ● 2-digit DTC output changed to check engine warning light due to discontinuation of OD OFF indicator light. ● DTC changed.

▶ Specification ◀

Model		New	Previous
Transaxle		U241E	U240E
Engine		1AZ-FE, 1AZ-FSE	1AZ-FE
Gear Ratio*1	1st	3.943	←
	2nd	2.197	←
	3rd	1.413	←
	4th	1.020	←
	Reverse	3.145	←
Differential Gear Ratio		2.923	←
Fluid Capacity*2 Liters (US qts, Imp. qts)		8.6 (9.1, 7.6)	7.6 (8.0, 6.7)
Fluid Type		ATF Type T-IV	←
Weight (Reference)*3 kg (lb)		88 (33.9)	87 (39.5)

*1: Counter Gear Ratio Included
*2: Differential Included
*3: Weight shows the figure with the fluid fully filled.

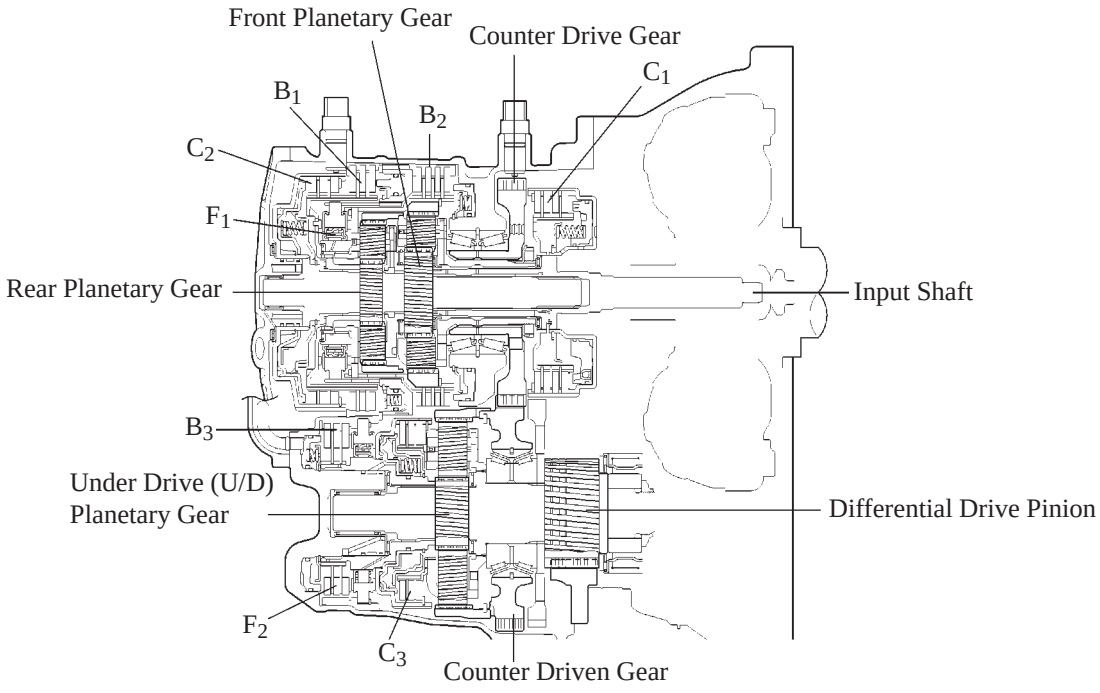

208CH01

▶ Specification ◀

Item			New	Previous
Transaxle Type			U241E	U240E
C_1	Forward Clutch	The No. of Discs	4	←
C_2	Direct Clutch		3	4
C_3	U/D Direct Clutch		3	←
B_1	2nd Brake		3	←
B_2	1st & Reverse Brake		5	←
B_3	U/D Brake		3	←
F_1	No.1 One-Way Clutch	The No. of Sprags	22	←
F_2	U/D One-Way Clutch		15	←
Front Planetary Gear		The No. of Sun Gear Teeth	43	←
		The No. of Pinion Gear Teeth	17	←
		The No. of Ring Gear Teeth	77	←
Rear Planetary Gear		The No. of Sun Gear Teeth	31	←
		The No. of Pinion Gear Teeth	19	←
		The No. of Ring Gear Teeth	69	←
U/D Planetary Gear		The No. of Sun Gear Teeth	32	←
		The No. of Pinion Gear Teeth	26	←
		The No. of Ring Gear Teeth	83	←
Counter Gear		The No. of Drive Gear Teeth	50	←
		The No. of Driven Gear Teeth	51	←

CH

2. TORQUE CONVERTER

- These torque converters have optimally designed fluid passages and impeller configuration resulting in substantially enhanced transmission efficiency to ensure better starting, acceleration and fuel economy.
- Furthermore, a hydraulically operated lock-up mechanism which cuts power transmission losses due to slippage at medium and high speeds is used.
- The basic construction and operation are the same as for the U240E for the previous models.

▶ Specification ◀

Item	New	Previous
Engine Type	1AZ-FE & 1AZ-FSE	1AZ-FSE
Transaxle Type	U241E	U240E
Torque Converter Type	3-Element, 1-Step, 2-Phase (with Lock-up Mechanism)	←
Stall Torque Ratio	1.8	←

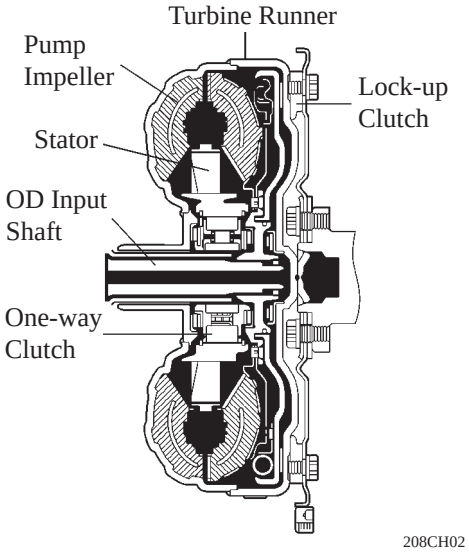

208CH02

3. OIL PUMP

The oil pump is combined with torque converter, lubricates the planetary gear units and supplies operating pressure to the hydraulic control.

▶ Specification ◀

Gear	Gear Teeth
Drive Gear	9
Driven Gear	10

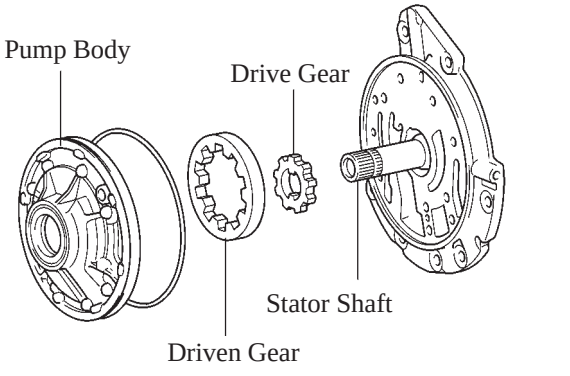

241CH85

4. PLANETARY GEAR UNIT

Construction

- The counter drive and driven gears are placed in front of the front planetary gear and the under drive (U/D) planetary gear unit is placed above the counter shaft. Furthermore, the force transmission method has been changed by eliminating the brake and the one-way clutch. As a result, a torque capacity that accommodates the high output engine has been attained, while realizing a compact gear unit.
- A centrifugal fluid pressure canceling mechanism has been adopted in the C_2 and C_3 clutches that are applied when shifting from 2nd to 3rd and from 3rd to 4th.

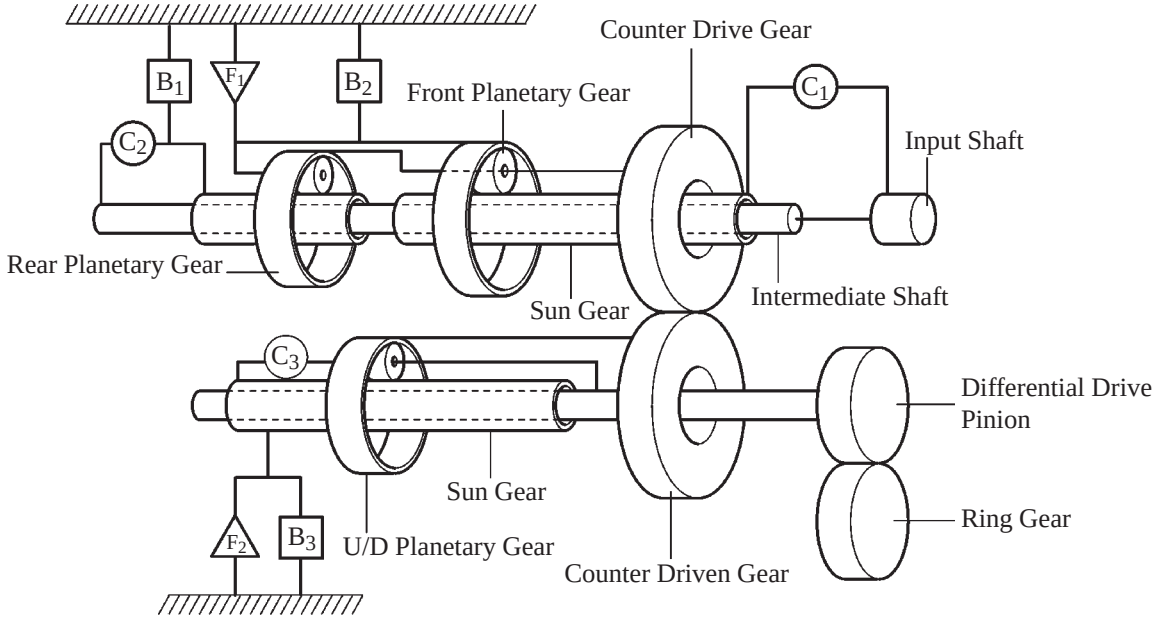

208CH04

Function of Component

Component		Function
C_1	Forward Clutch	Connects input shaft and front planetary sun gear.
C_2	Direct Clutch	Connects input shaft and rear planetary sun gear.
C_3	U/D Direct Brake	Connects U/D sun gear and U/D planetary carrier.
B_1	2nd Brake	Prevents rear planetary carrier from turning either clockwise or counterclockwise.
B_2	1st & Reverse Brake	Prevents rear planetary carrier and front planetary ring gear from turning either clockwise or counterclockwise.
B_3	U/D Brake	Prevents U/D sun gear from turning either clockwise or counterclockwise.
F_1	No.1 One-Way Clutch	Prevents rear planetary carrier from turning counterclockwise.
F_2	U/D One-Way Clutch	Prevents U/D planetary sun gear from turning clockwise.
Planetary Gears		These gears change the route through which driving force is transmitted, in accordance with the operation of each clutch and brake, in order to increase or reduce the input and output speed.

Transaxle Power Flow

Shift Lever Position	Gear	Solenoid Valve				C_1	C_2	C_3	B_1	B_2	B_3	F_1	F_2
		SL1	SL2	S4	DSL								
P	Park	ON	ON	OFF	OFF						○		
R	Reverse	ON	OFF	OFF	OFF		○			○	○		
N	Neutral	ON	ON	OFF	OFF						○		
D, S (4)*2	1st	ON	ON	OFF	OFF	○					○	○	○
	2nd	OFF	ON	OFF	OFF	○			○		○		○
	3rd	OFF/ON*1	OFF	OFF	OFF/ON*1	○	○				○		○
	4th	OFF/ON*1	OFF	ON	OFF/ON*1	○	○	○					
S (3)*2	1st	ON	ON	OFF	OFF	○					○	○	○
	2nd	OFF	ON	OFF	OFF	○			○		○		○
	3rd	OFF/ON*	OFF	OFF	OFF/ON*1	○	○				○		○
S (2)*2	1st	ON	ON	OFF	OFF	○					○	○	○
	2nd	OFF	ON	OFF	OFF	○			○		○		○
S (1)*2	1st	ON	ON	OFF	ON	○				○	○	○	○

○: Operation

*1: Lock-up ON

*2: When the shift lever position is “S” and the range position indicator shows “4”, “3”, “2” or “1”

1st Gear (D or S mode 2, 3, 4 Position)

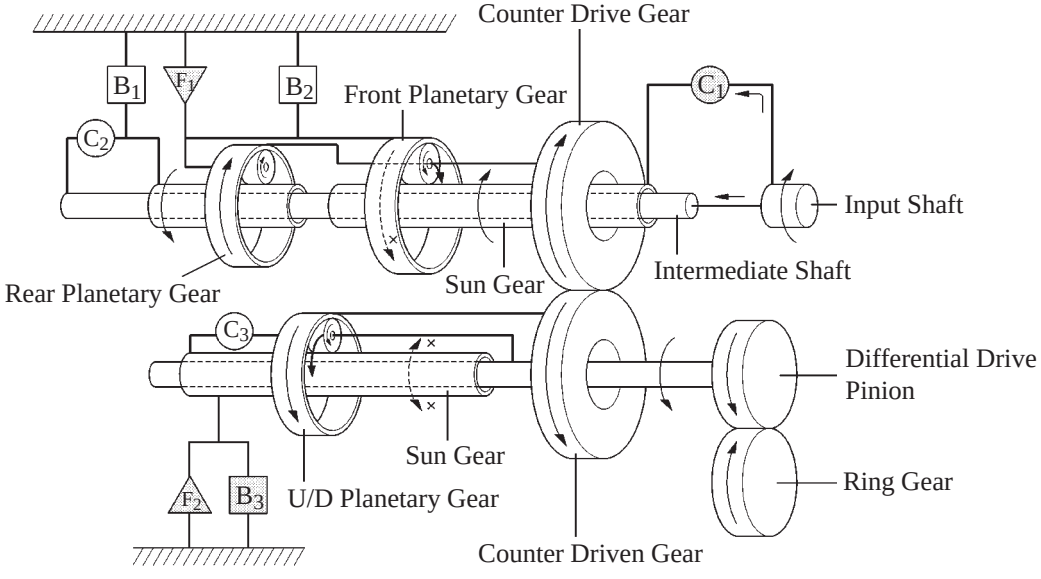

161ES09

2nd Gear (D or S mode 2, 3, 4 Position)

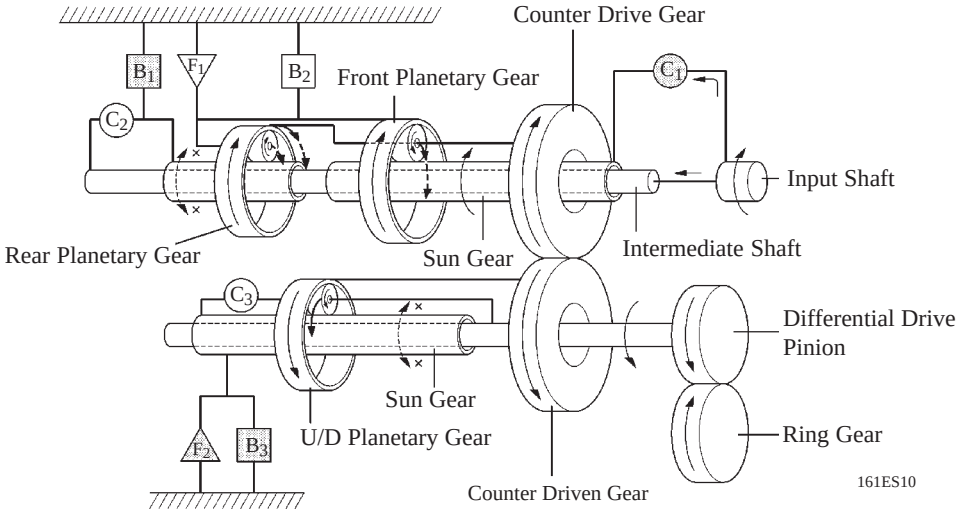

3rd Gear (D or S mode 3, 4 Position)

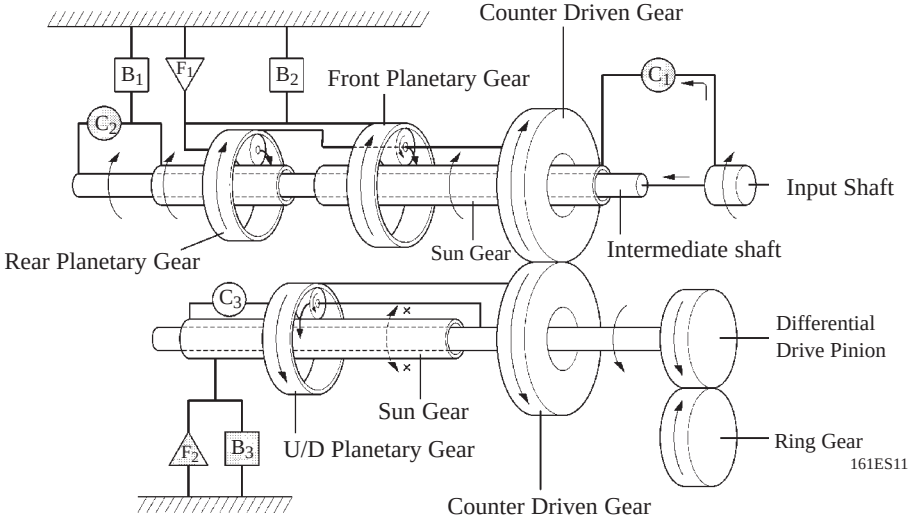

4th Gear (D or S mode 4 Position)

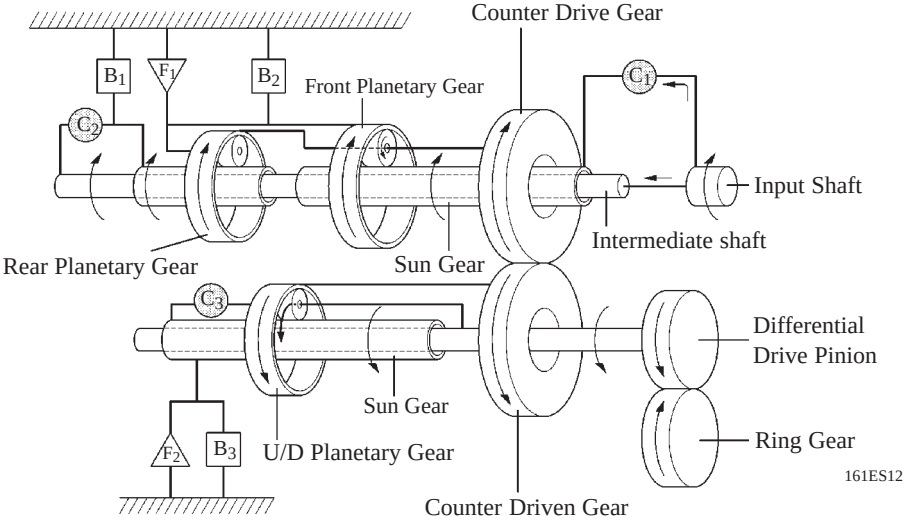

CH

1st Gear (S mode 1 Position)

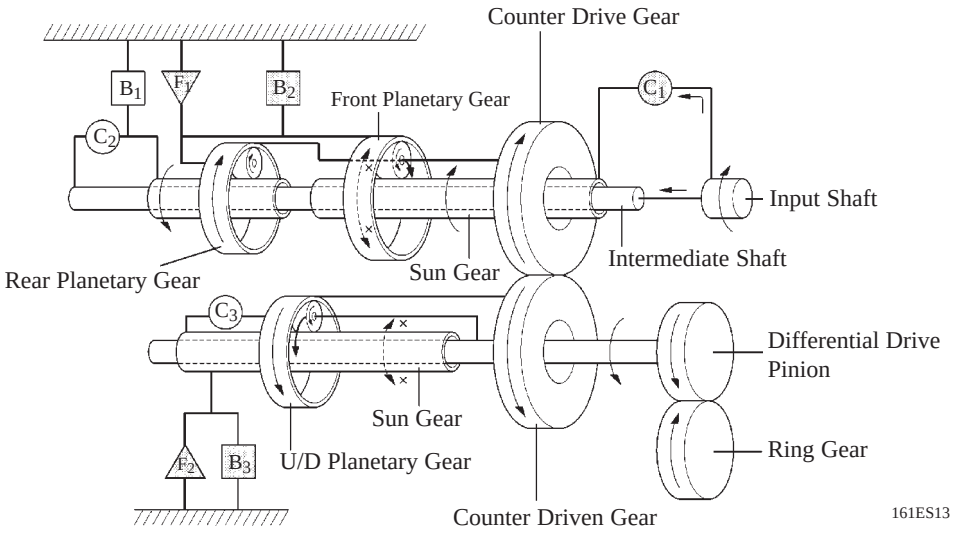

Reverse Gear (R Position)

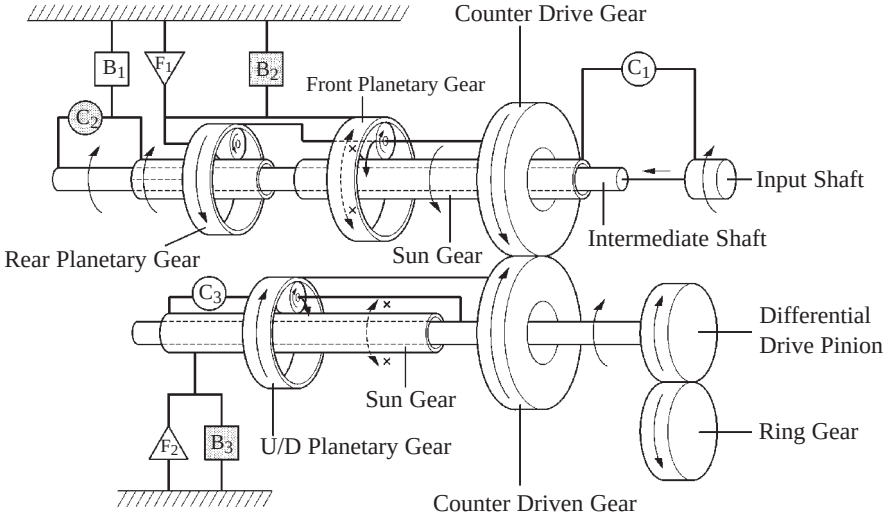

Centrifugal Fluid Pressure Canceling Mechanism

There are two reasons for improving the conventional clutch mechanism:

- To prevent the generation of pressure by the centrifugal force that applied to the fluid in piston fluid pressure chamber (hereafter referred to as "chamber A") when the clutch is released, a check ball is provided to discharge the fluid. Therefore, before the clutch can be subsequently applied, it took time for the fluid to fill the chamber A.
- During shifting, in addition to the original clutch pressure that is controlled by the valve body, the pressure that acts on the fluid in the chamber A also exerts influence, which is dependent upon revolution fluctuations.

To address these two needs for improvement, a canceling fluid pressure chamber (hereafter referred to as "chamber B") has been provided opposite chamber A.

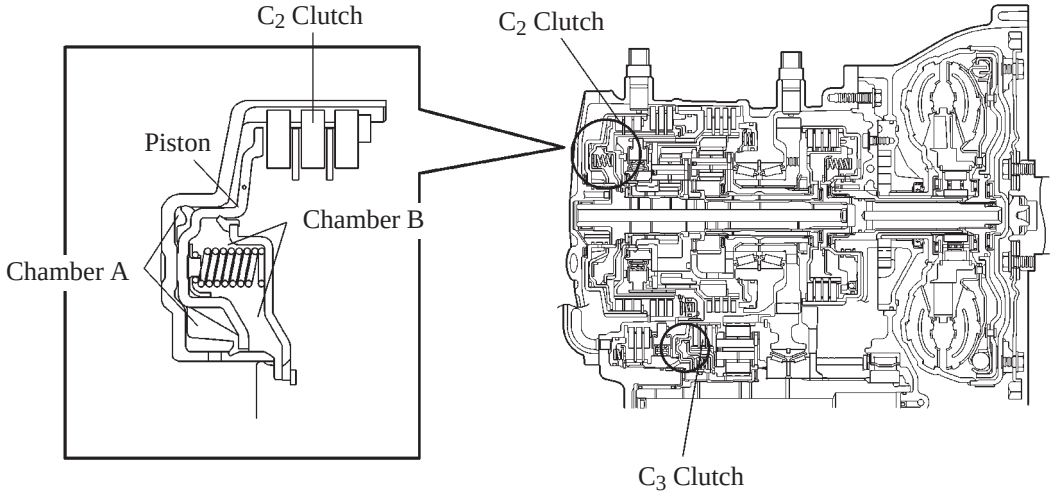

By utilizing the lubrication fluid such as that of the shaft, the same amount of centrifugal force is applied, thus canceling the centrifugal force that is applied to the piston itself. Accordingly, it is not necessary to discharge the fluid through the use of a check ball, and a highly responsive and smooth shifting characteristic has been achieved.

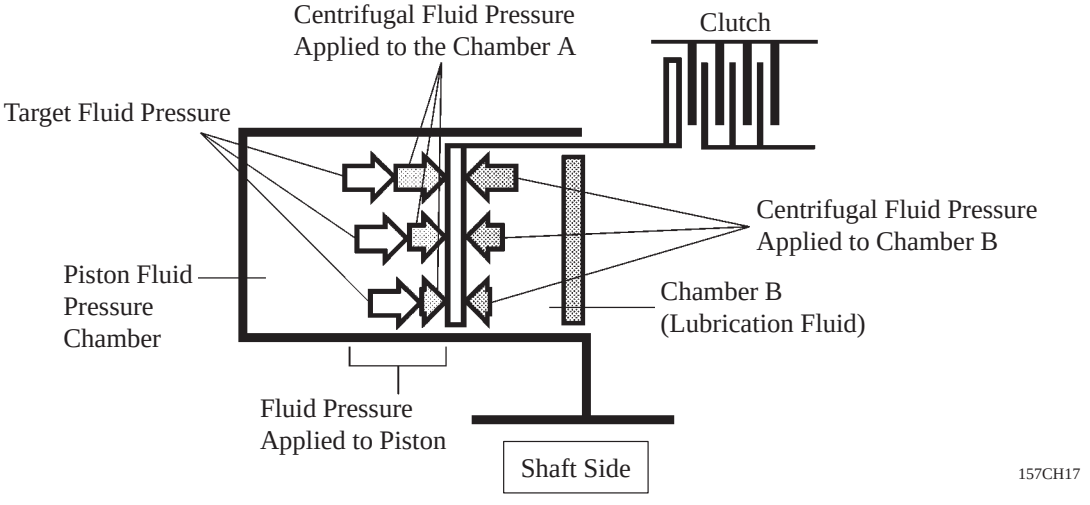

Centrifugal fluid pressure applied to chamber A	=	Centrifugal fluid pressure applied to chamber B		
Target fluid pressure (original clutch pressure)	=	Fluid pressure applied to piston	–	Centrifugal fluid pressure applied to chamber B

5. VALVE BODY UNIT

General

The valve body consists of the upper and lower valve bodies and 5 solenoid valves.
Apply orifice control, which controls the flow volume to the B_3 brake, has been adopted in this unit.

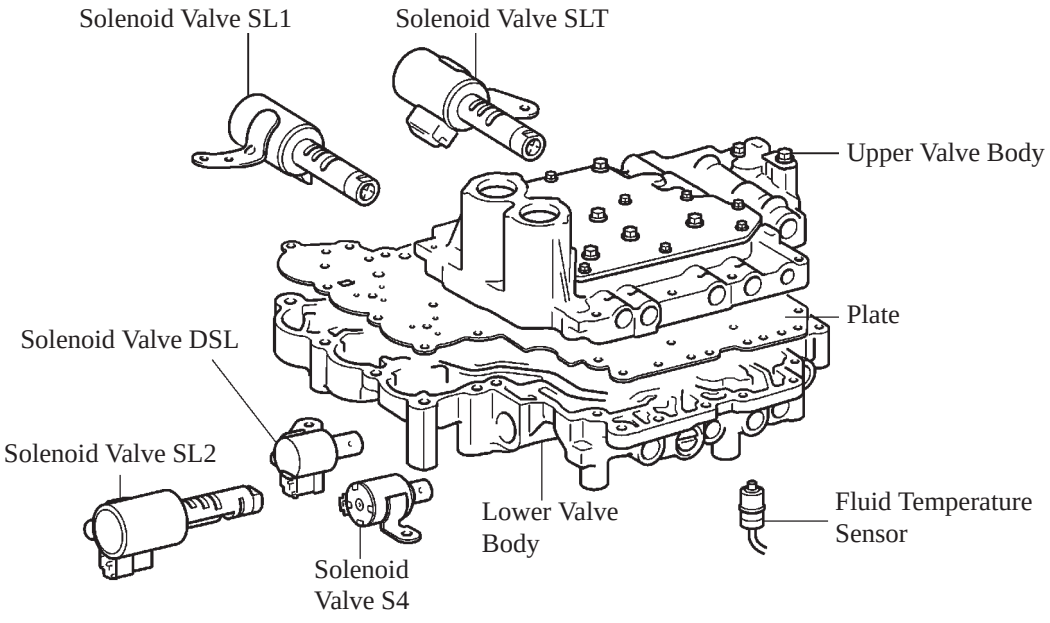

181CH11

▶ Upper Valve Body ◀

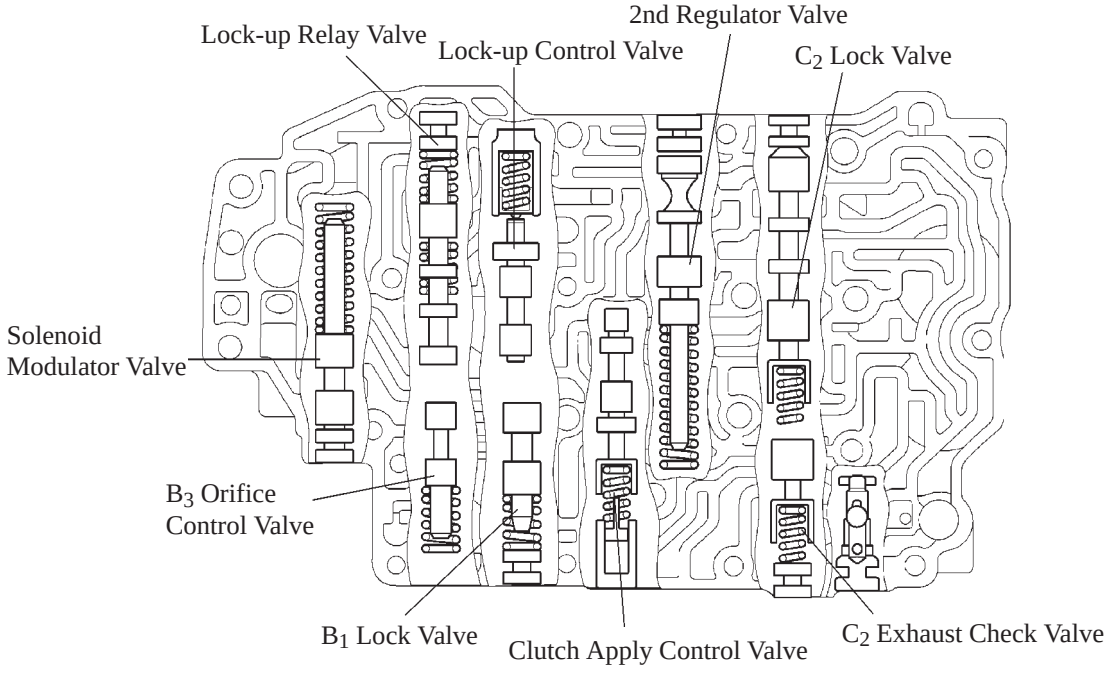

208CH06

▶ Lower Valve Body ◀

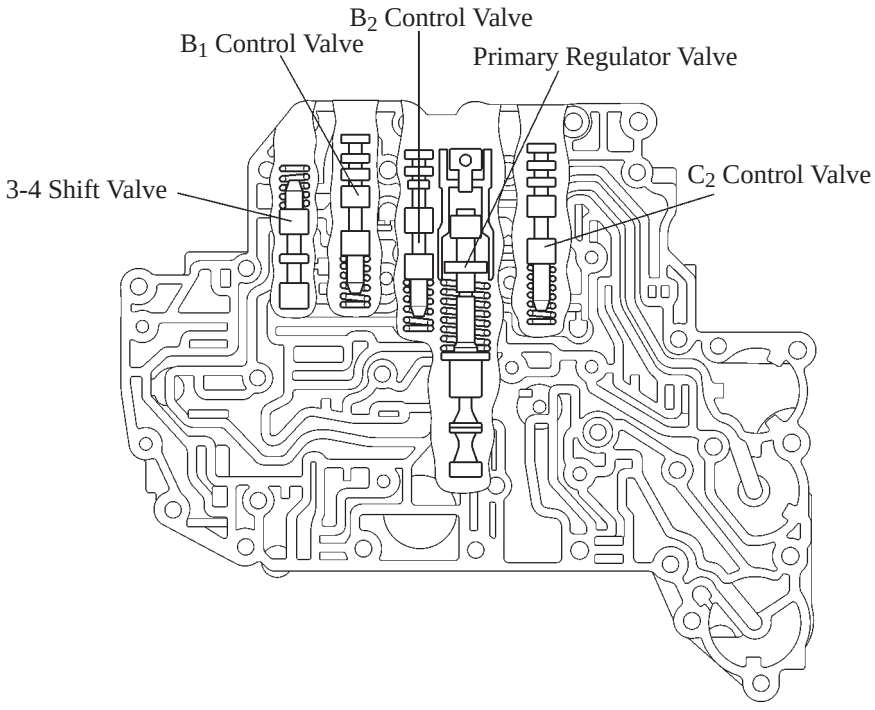

208CH07

Solenoid Valves

1) Solenoid Valves SL1, SL2, and SLT

a. General

In order to provided a hydraulic pressure that is proportion to current that flows to the solenoid coil, the solenoid valve SL1, SL2, and SLT linearly controls the line pressure and clutch and brake engagement pressure based on the signals it receives from the engine & ECT ECU.
The solenoid valves SL1, SL2, and SLT have the same basic structure.

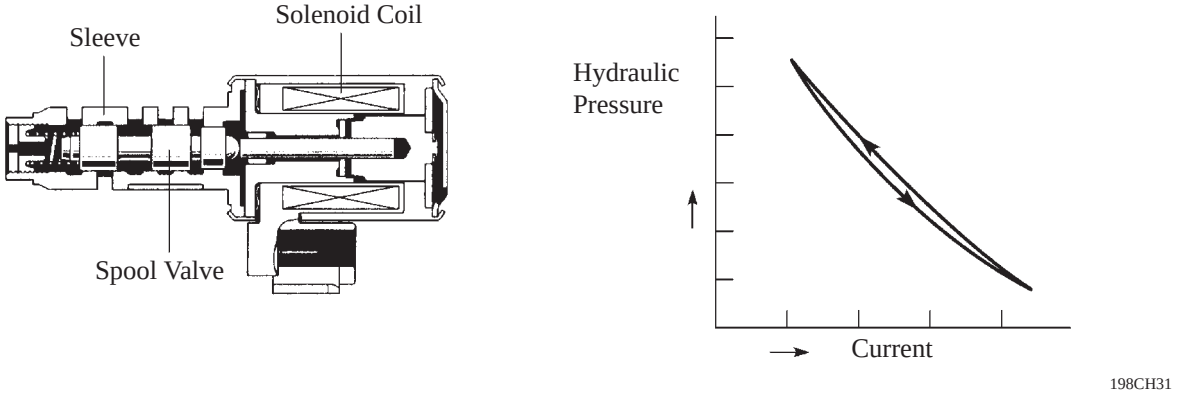

b. Function of Solenoid Valve SL1, SL2, and SLT

Solenoid Valve	Action	Function
SL1	For clutch and brake engagement pressure contro	• B_1 brake pressure control • Lock-up clutch pressure control
SL2		C_2 clutch pressure control
SLT	For line pressure control	• Line pressure control • Secondary pressure control

2) Solenoid Valves S4 and DSL

a. General

The solenoid valves S4 and DSL use a three-way solenoid valve.

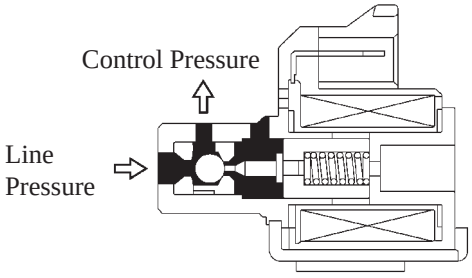

Solenoid Valve ON

161ES65

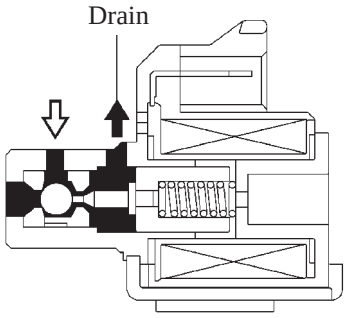

Solenoid Valve OFF

181CH12

CH

b. Function of Solenoid Valve S4

The solenoid valves S4 when set to ON controls the 3-4 shift valve to establish the 4th by changing over the fluid pressure applied to B_3 brake and C_3 clutch.

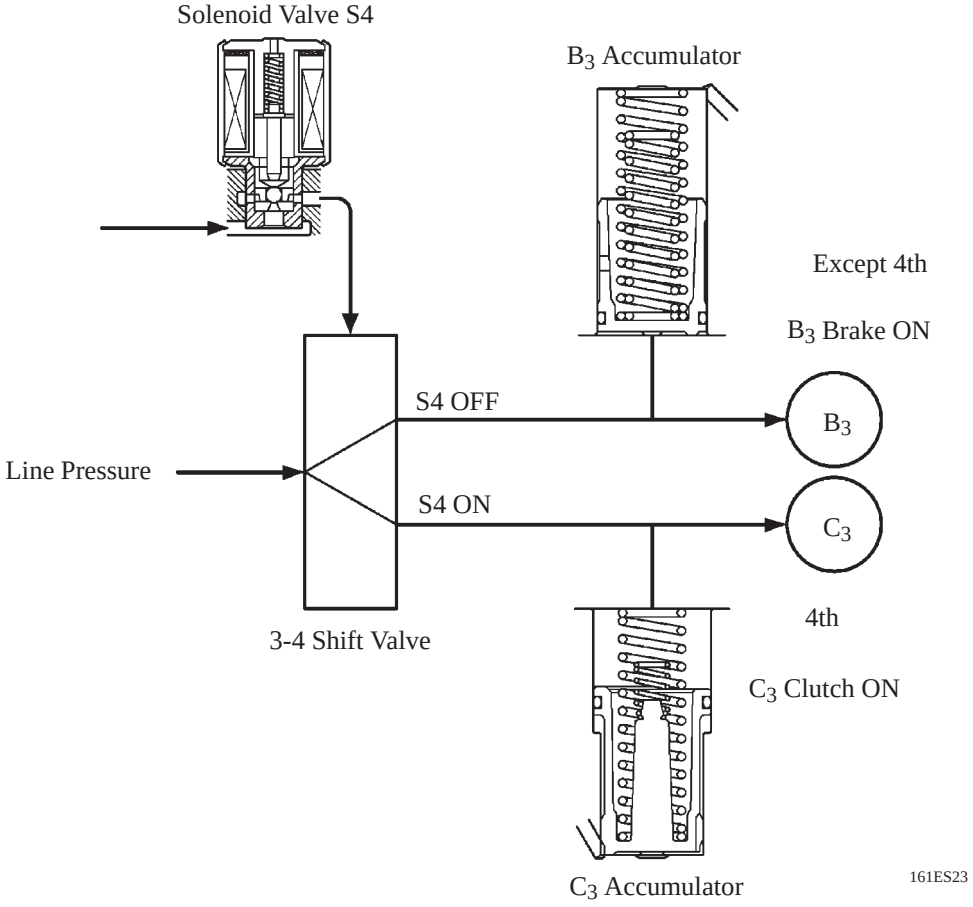

161ES23

c. Function of Solenoid Valve DSL

The solenoid valve DSL controls the B_2 control valve via the C_2 lock valve when the transaxle is shifted in the R or L position.
During lock-up, the lock-up relay valve is controlled via the C_2 lock valve.

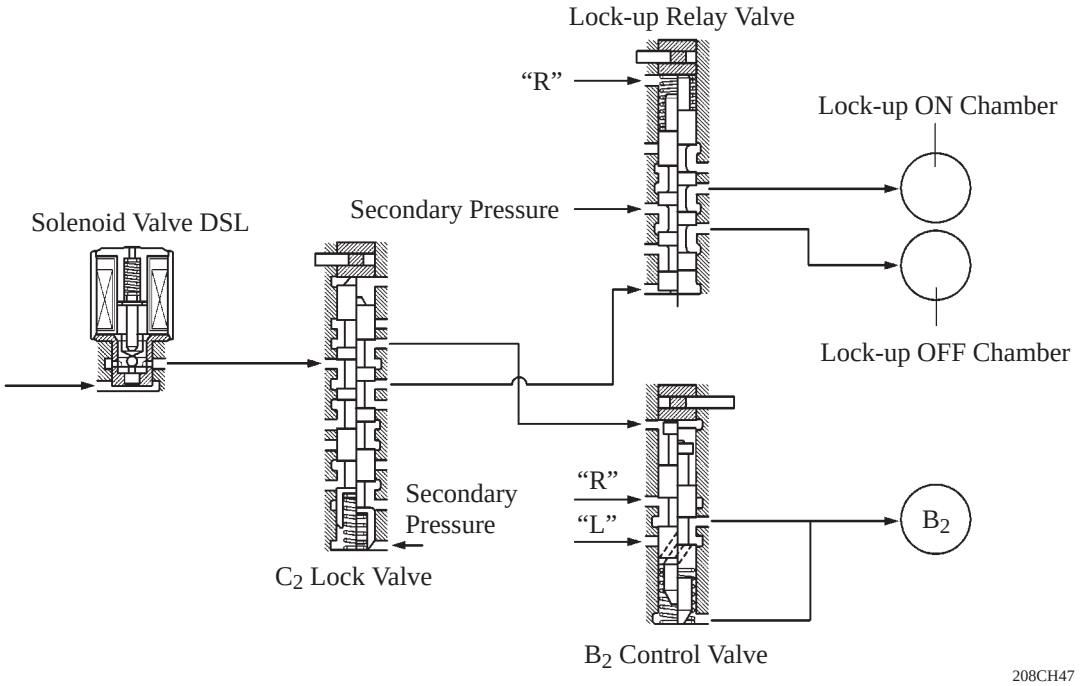

Apply Orifice Control

This control is effected by the B_3 orifice control valve. The B_3 orifice control valve has been provided for the B_3 brake, which is applied when shifting from 4th to 3rd. The B_3 orifice control valve is controlled by the amount of the line pressure in accordance with shifting conditions, and the flow volume of the fluid that is supplied to the B_3 brake is controlled by varying the size of the control valve's apply orifice.

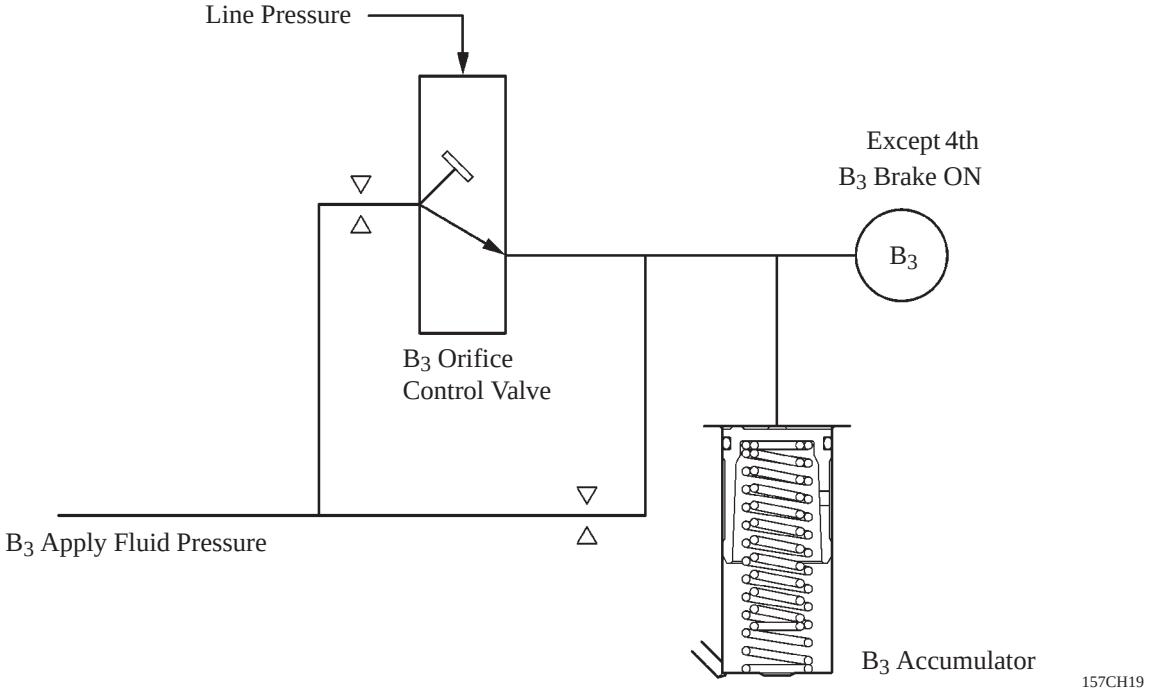

6. ELECTRONIC CONTROL SYSTEM

General

The electronic control system of the U241E automatic transaxle consists of the control listed below.

System	Function
Clutch Control Pressure	● Controls the pressure that is applied directly to B_1 brake and C_2 clutch by actuating the shift solenoid valve (SL1, SL2) in accordance with engine & ECT ECU signals. ● The solenoid valves SL1 and SL2 minutely controls the clutch pressure in accordance with the engine output and driving conditions.
Line Pressure Optimal Control	Actuates the solenoid valve SLT to control the line pressure in accordance with information from the engine & ECT ECU and the operating conditions of the transaxle.
Engine Torque Control	Retards the engine ignition timing temporarily to improve shift feeling during up or down shifting.
Shift Timing Control	The engine & ECT ECU sends current to the solenoid valve SL1 and/or SL2 based on signals from each sensor and shifts the gear.
Lock-up Timing Control	The engine & ECT ECU sends current to the shift solenoid valve (DSL) based on signals from each sensor and engages or disengages the lockup clutch.
"N" to "D" Squat Control	When the shift lever is shifted from "N" to "D" position, the gear is temporarily shifted to 2nd and then to 1st to reduce vehicle squat.
Multi-mode Automatic Transmission	The engine and ECT ECU perform shift control upon receiving signals from the transmission control switch (+: up-shift range switch signal and –: down-shift range switch signal).
Diagnosis	When the engine & ECT ECU detects a malfunction, the engine & ECT ECU makes a diagnosis and memorizes the failed section.
	To increase the speed for processing the signals, the 32-bit CPU of the engine & ECT ECU has been adopted.
Fail-safe	Even if a malfunction is detected in the sensors or solenoids, the engine & ECT ECU effects fail-safe control to prevent the vehicle's drivability from being affected significantly.

Construction

The configuration of the electronic control system in the U241E automatic transaxle is as shown in the following chart.

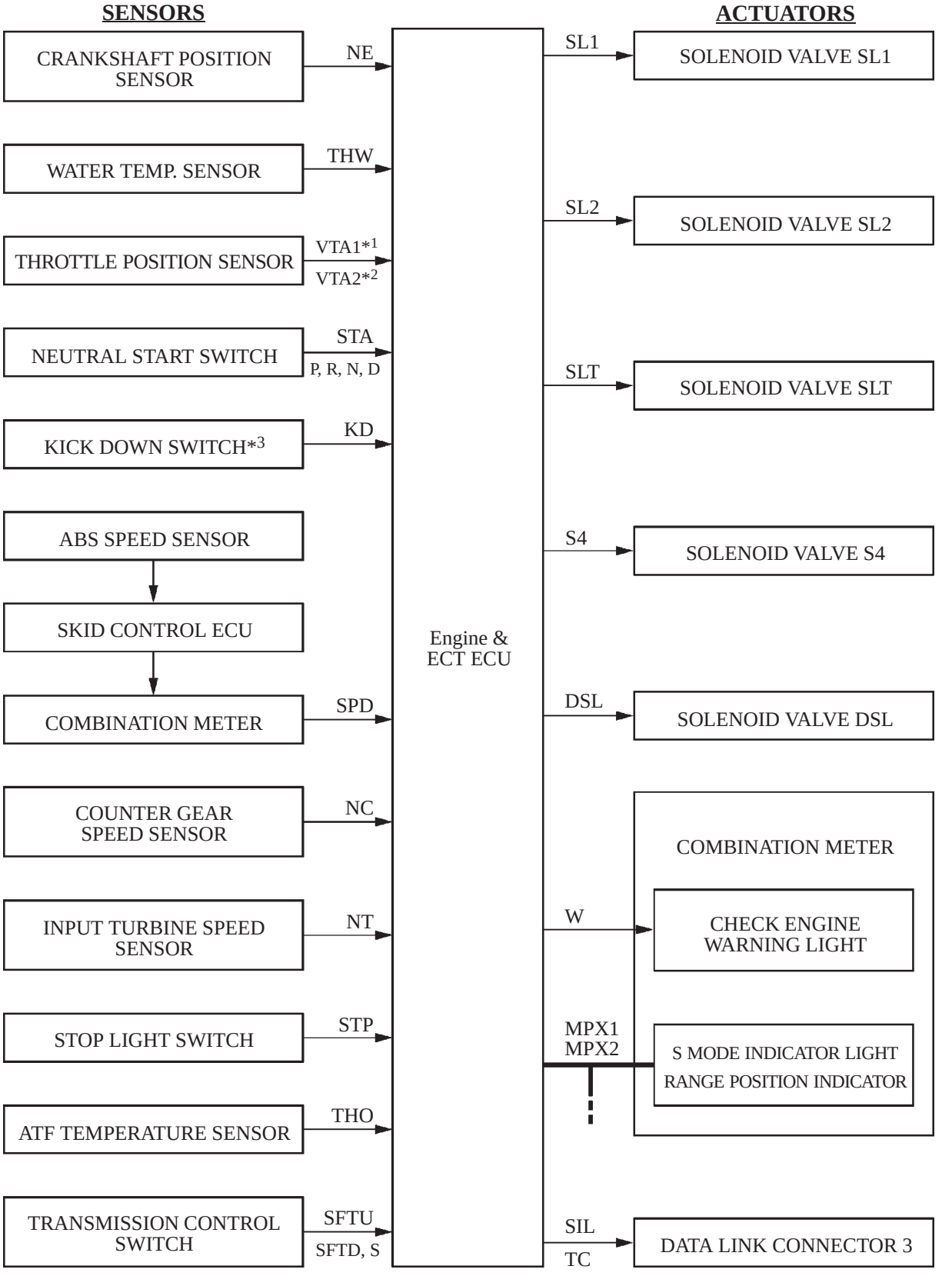

*1: 1AZ-FE, 1AZ-FSE engine
*2: 1AZ-FSE engine only
*3: Europe LHD only

240CH85

Layout of Components

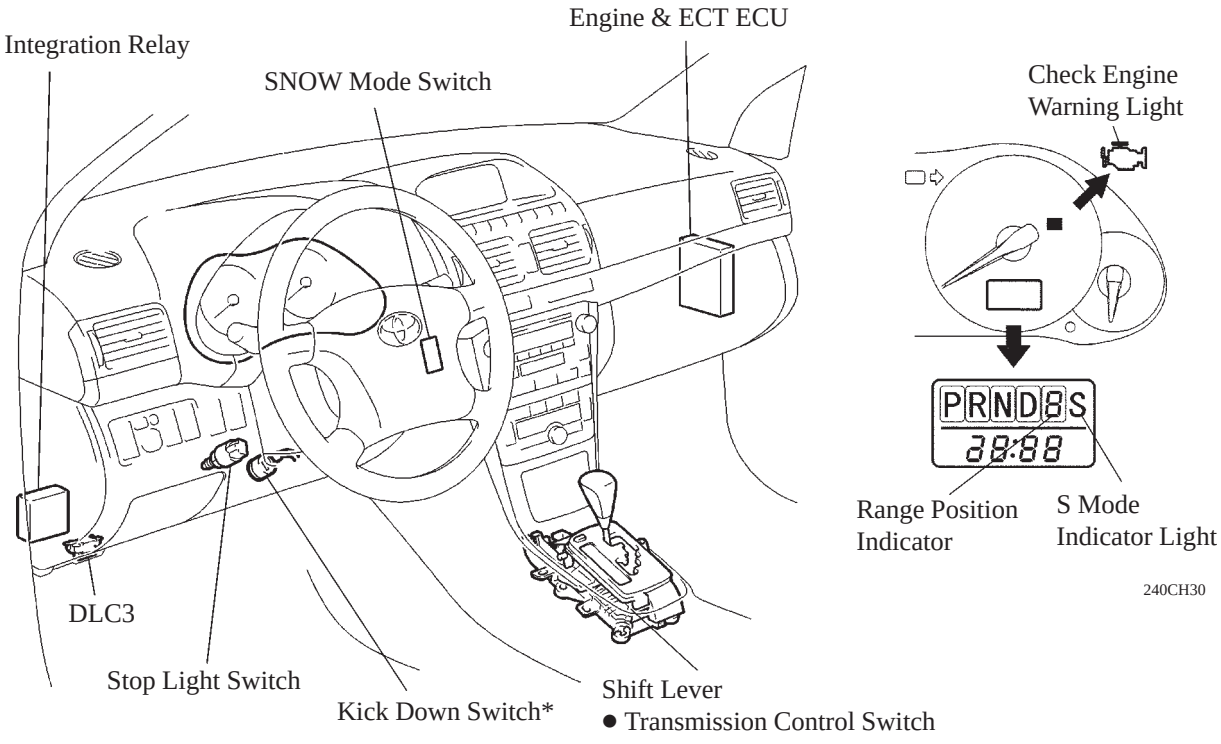

*: Only for the Engine LHD Models

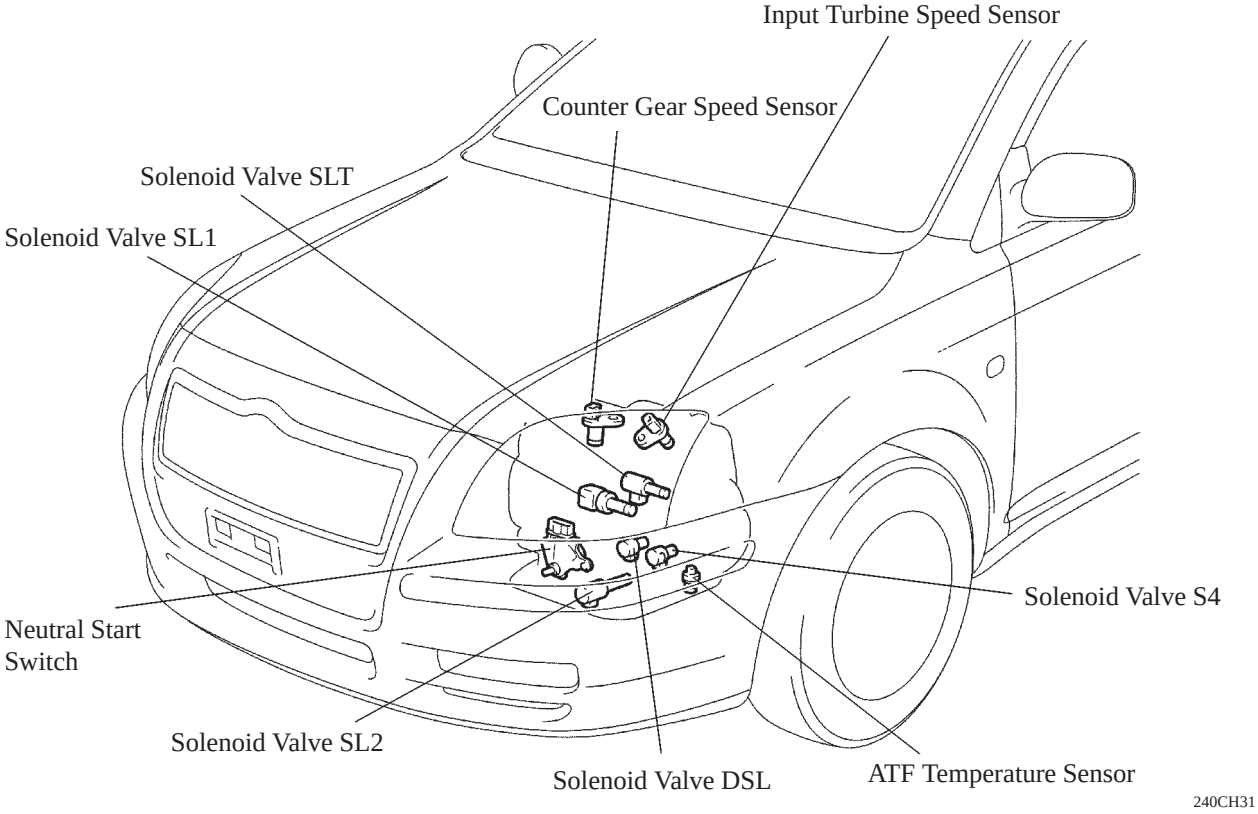

CH

Construction and Operation of Main Component

1) Fluid Temperature Sensor

A fluid temperature sensor is installed in the valve body for direct detection of the fluid temperature. Fluid temperature sensor is used for revision of clutches and brakes pressure to keep smooth shift quality every time.

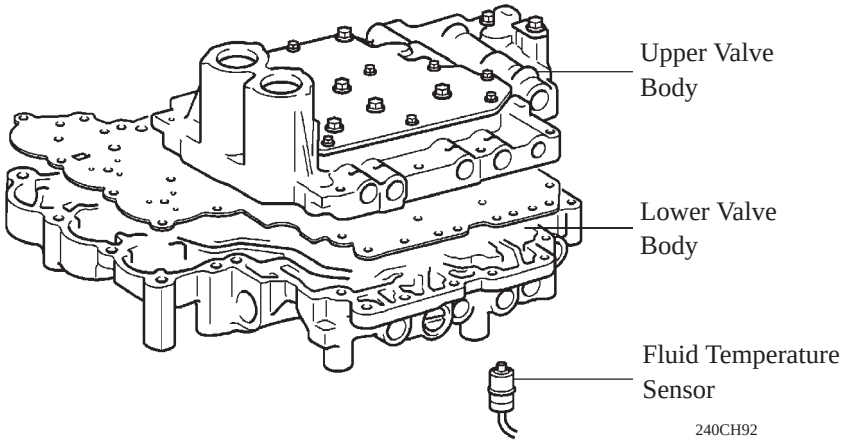

240CH92

2) Speed Sensors

The U241E automatic transaxle is used an input turbine speed sensor (for the NT signal) and a counter gear speed sensor (for the NC signal). Thus, the engine & ECT ECU can detect the timing of the shifting of the gears and appropriately control the engine torque and hydraulic pressure in response to the various conditions.

- The input turbine speed sensor detects the input speed of the transaxle. The direct clutch (C2) drum is used as the timing rotor for this sensor.
- The counter gear speed sensor detects the speed of the counter gear. The counter drive gear is used as the timing rotor for this sensor.

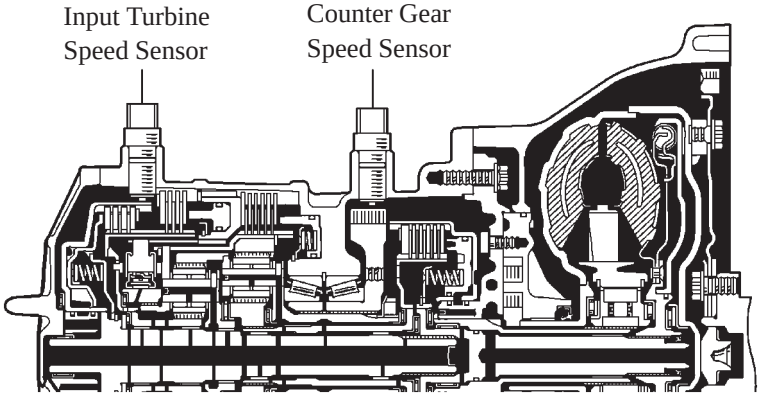

181CH14

Transmission Control Switch

1) General

The transmission control switch is composed of a switch that detects whether the shift lever is shifted into the S position and a momentary type up-shift range and down-shift range switches that detect whether these are operated in the + direction or – direction.

2) Operation

- When the shift lever is engaged into the S position, there is continuity between the S terminal and the IG terminal in the transmission control switch.
- When the shift lever is moved to the + direction, the up-shift range switch turns on and there is continuity between the SFTU terminal and the E terminal in the transmission control switch. Then, this signal is output to the engine & ECT ECU as a up-shift range signal.
- When the shift lever is moved to the – direction, the down-shift range switch turns on and there is continuity between the SFTD terminal and the E terminal in the transmission control switch. Then, this signal is output to the engine & ECT ECU as a down-shift range signal.

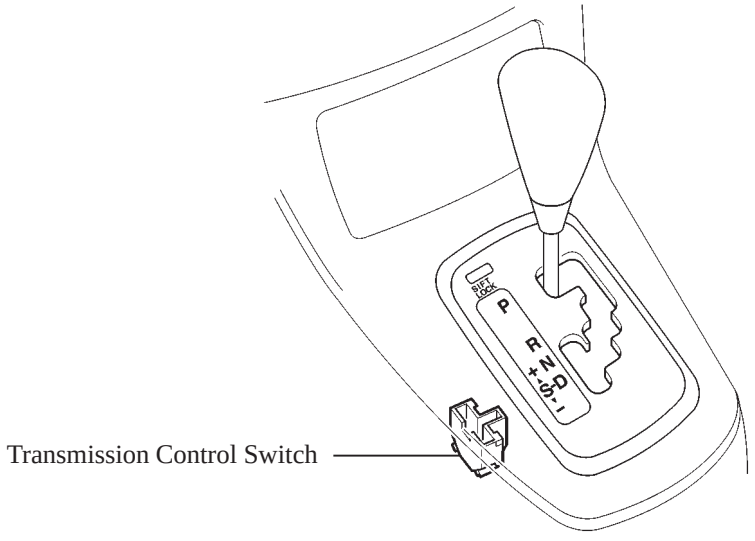

240CH81

▶ System Diagram ◀

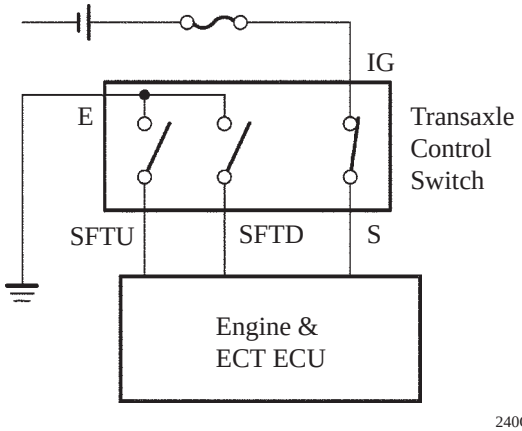

240CH40

Clutch Pressure Control

1) Clutch to Clutch Pressure Control

A direct clutch pressure control has been adopted for shifting from the 1st to 2nd gear, and from the 2nd to 3rd gear. Actuates solenoid valves SL1 and SL2 in accordance with the signals from the engine & ECT ECU, and guides this output pressure directly to control valves B_1 and C_2 in order to regulate the line pressure that acts on the B_1 brake and C_2 clutch. As a result, compact B_1 and C_2 accumulators without a back pressure chamber have been realized.

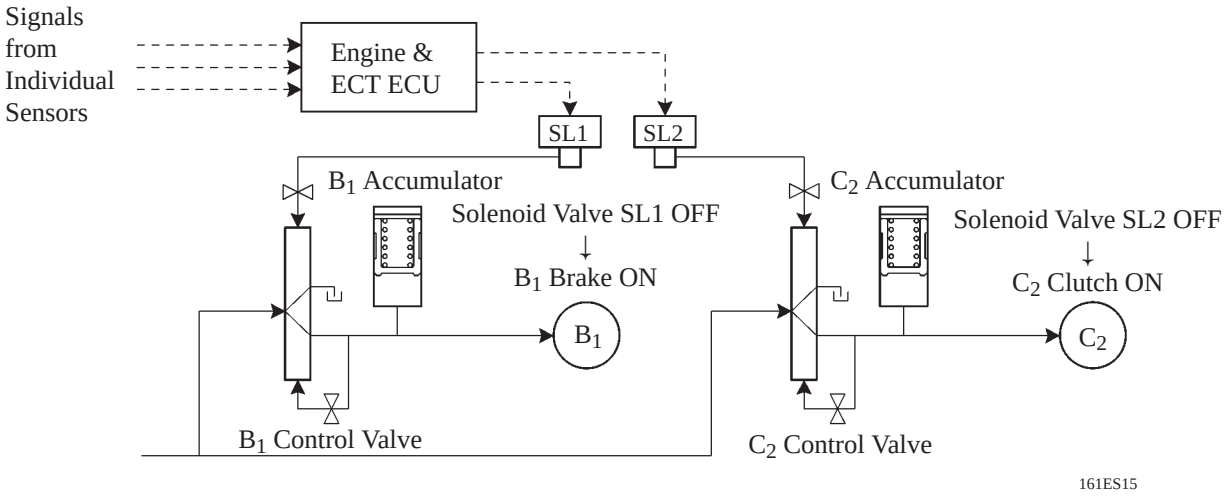

2) Clutch Pressure Optimal Control

Solenoid valves SL1 and SL2 are used for optimal control of clutch pressure. The engine & ECT ECU monitors the signals from various types of sensors such as the input turbine speed sensor, allowing shift solenoid valves SL1 and SL2 to minutely control the clutch pressure in accordance with engine output and driving conditions. As a result, smooth shift characteristics have been realized.

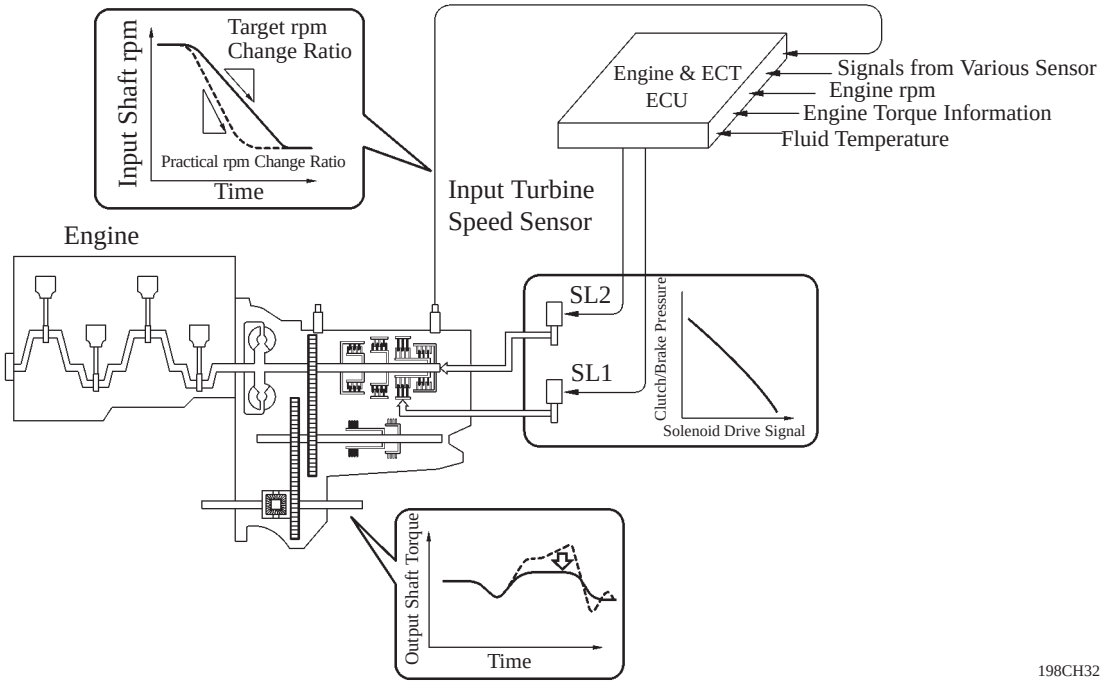

Apply Orifice Control

The B_3 orifice control valve has been provided for the B_3 brake, which is applied when shifting from 4th to 3rd. The B_3 orifice control valve is controlled by the amount of the line pressure in accordance with shifting conditions, and the flow volume of the fluid that is supplied to the B_3 brake is controlled by varying the size of the control valve's apply orifice.

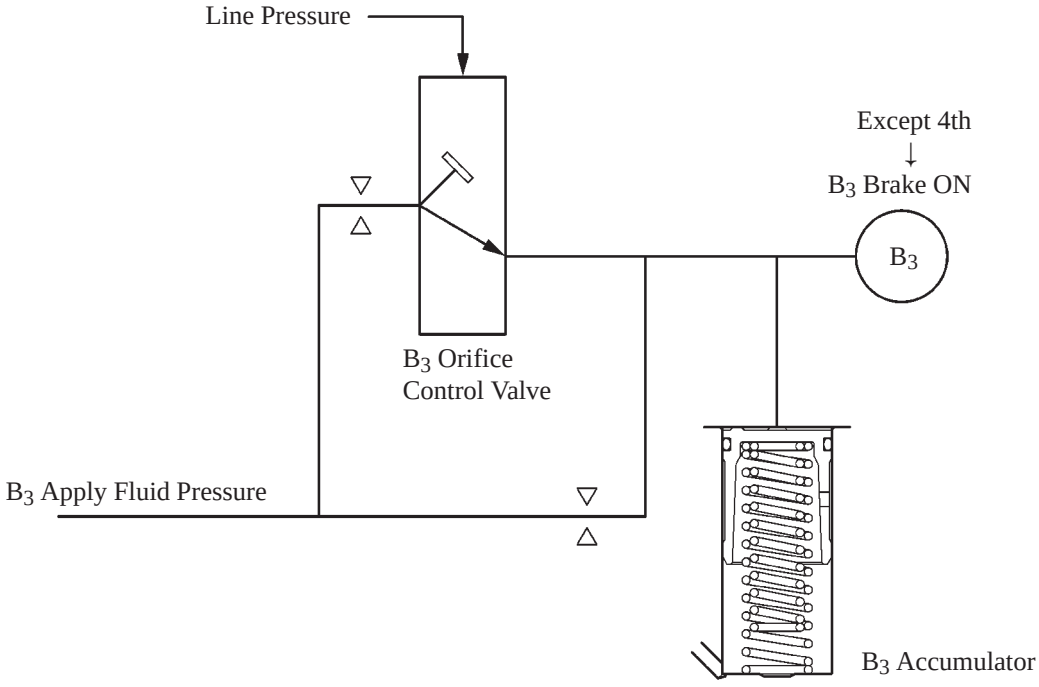

Line Pressure Optimal Control

The line pressure is controlled by using a solenoid valve SLT. Through the use of the solenoid valve SLT, the line pressure is optimally controlled in accordance with the engine torque information, as well as with the internal operating conditions of the torque converter and the transaxle. Accordingly, the line pressure can be controlled minutely in accordance with the engine output, traveling condition, and the ATF temperature, thus realizing smooth shift characteristics and optimizing the workload on the oil pump.

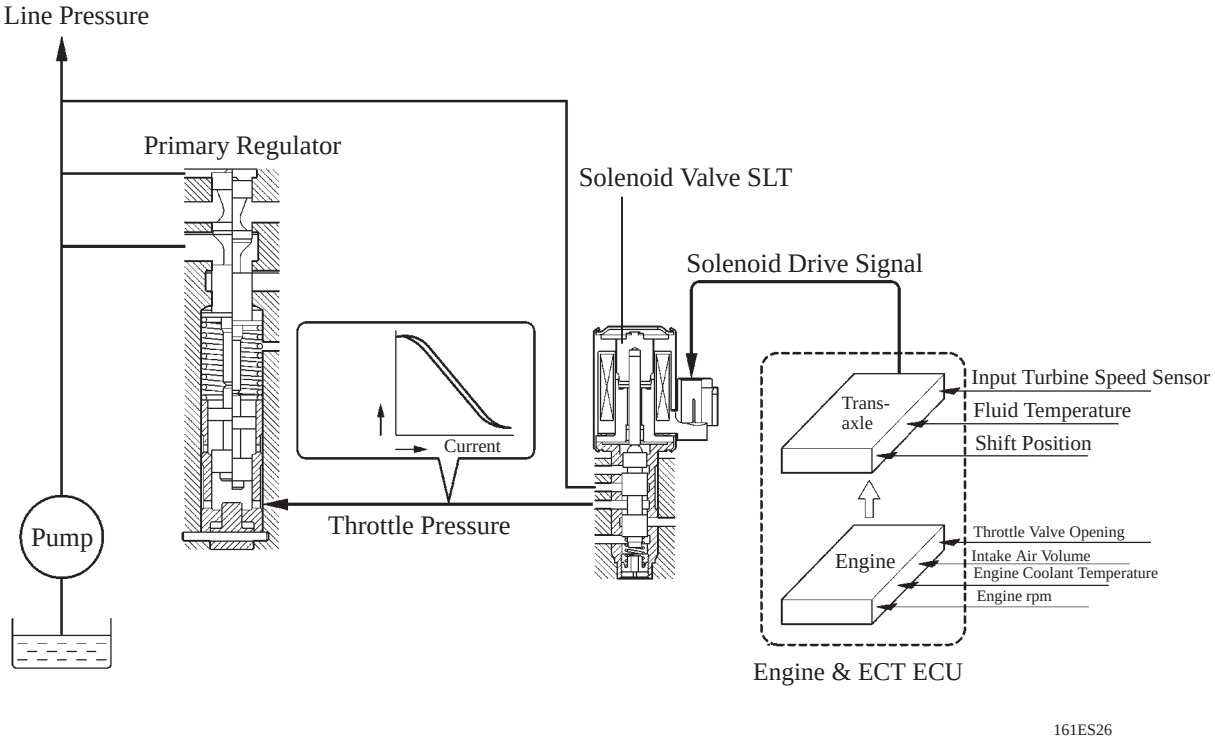

Multi-mode Automatic Transmission

General

- Multi-mode control sets S mode position, which is next to D position. Moving the shift lever to the front ("+") or rear ("–") position allows the driver to select the shift range position at driver's own discretion, enabling shifting that feels like a manual transmission.
- A gate-type shift lever especially for multi-mode control is on the front console.
- A range position indicator displays the current range position and an S mode indicator light that lights up when the S mode position is selected in the combination meter.

▶ System Diagram ◀

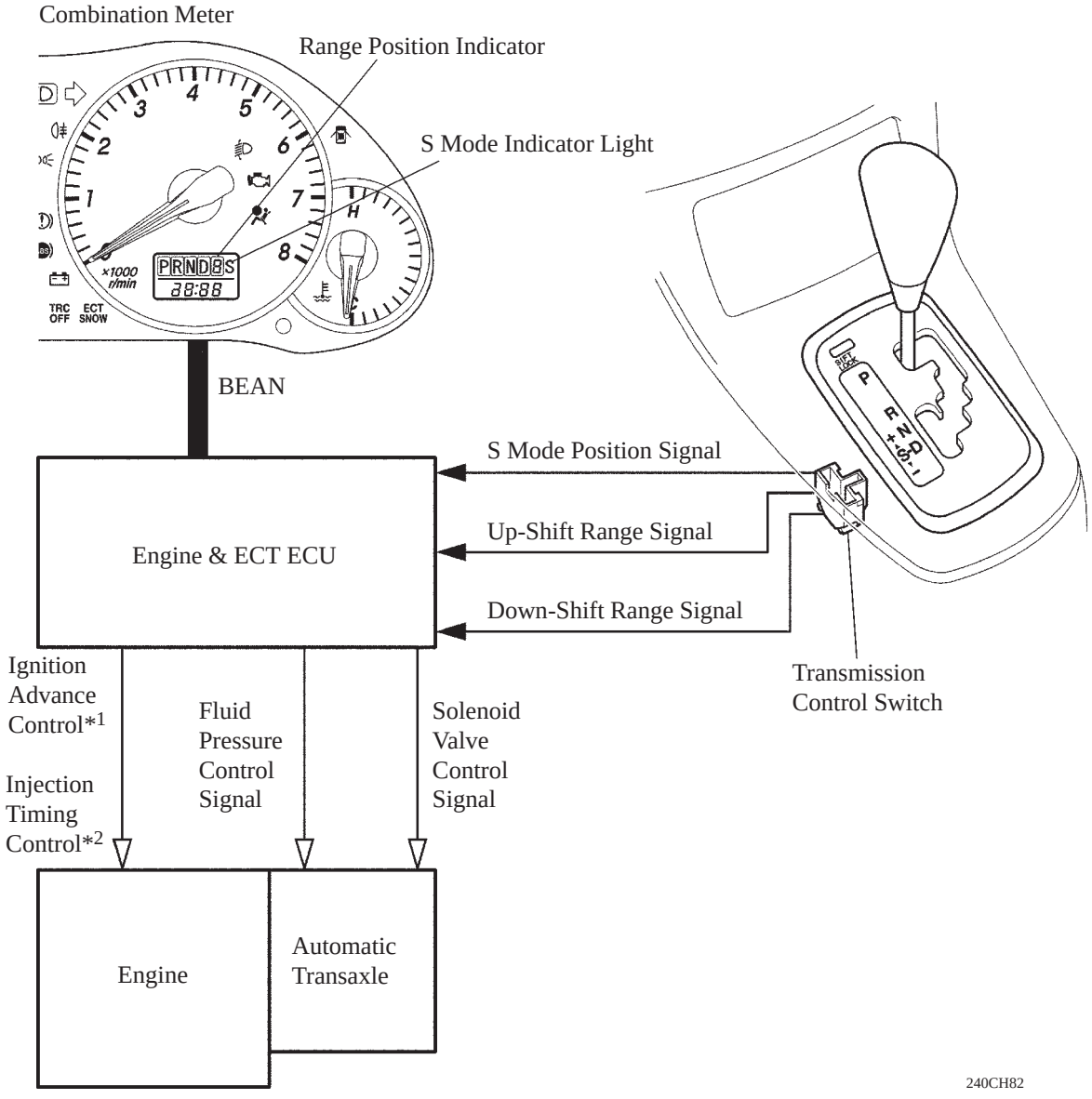

*1: Gasoline Engine
*2: Diesel Engine

Operation

- The driver selects the S mode position by engaging the shift lever. At this time, the shift range position always moves into the 3 range position. Then, when the driver moves the shift lever to the front (“+”) or rear (“–”) position, the shift range position changes one position at a time.
- With this control, the engine and ECT ECU performs the optimal gear-shifting control within the range of the gear enabled by the range selected by the driver. When the vehicle stops, it shifts into 1st gear like an ordinary automatic transaxle.
- When the shift lever is in S mode position, the S mode indicator in the combination meter lights up. The shift range position indicator displays the status of the range position selected by the driver.

Shift Range Position Transition **Shift Lever Movement**

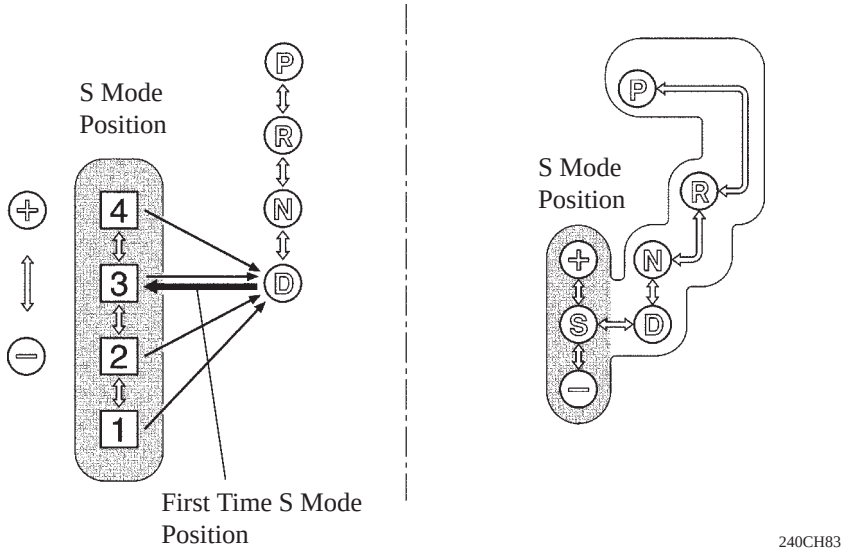

▶ Shift Program ◀

The usable gears are shown in the chart below:

Range Position Indicator	Shift Range Position	Usable Gears
4	4	4th ↔ 3rd ↔ 2nd ↔ 1st
3	3	3rd ↔ 2nd ↔1st
2	2	2nd ↔ 1st
1	1	1st

Fail Safe

This function minimizes the loss of operation when any abnormality occurs in a sensor or solenoid.

▶ Fail Safe List ◀

Malfunction Part	Function
Speed Sensor	During a speed sensor malfunction, the vehicle speed is detected through the signals from the counter gear speed sensor to effect normal control.
Fluid Temp. Sensor	During a fluid temp. sensor malfunction, 4th upshift is prohibited.
Counter Gear Speed Sensor	During a counter gear speed sensor malfunction, 4th upshift is prohibited.
Solenoid Valve SL1, SL2, and S4	The current to the failed solenoid valve is cut off and control is effected by operating the other solenoid valves with normal operation. Shift control is effected as described in the table below, depending on the failed solenoid.

When all solenoids are normal				When shift solenoid SL1 is abnormal								When SL2 is abnormal				When S4 is abnormal			
				Traveling 3rd or 4th				Traveling 1st or 2nd											
Solenoid			Gear	Solenoid			Gear	Solenoid			Gear	Solenoid			Gear	Solenoid			Gear
SL1	SL2	S4		SL1	SL2	S4		SL1	SL2	S4		SL1	SL2	S4		SL1	SL2	S4	
ON	ON	OFF	1st	x	ON ↓ OFF	OFF	3rd	x*	ON	OFF	2nd	ON ↓ OFF	x	OFF	3rd	ON	ON	x	1st
OFF	ON	OFF	2nd	x	ON ↓ OFF	OFF	3rd	x*	ON	OFF	2nd	OFF	x	OFF	3rd	OFF	ON	x	2nd
OFF	OFF	OFF	3rd	x	OFF	OFF	3rd	x*	OFF ↓ ON	OFF ↓ ON	3rd	OFF	x	OFF	3rd	OFF	OFF	x	3rd
OFF	OFF	ON	4th	x	OFF	ON	4th	x*	OFF ↓ ON	ON	3rd	OFF	x	ON	4th	OFF	OFF	x	3rd

When SL1 and SL2 are abnormal				When SL1 and S4 are abnormal								When SL2 and S4 are abnormal				When SL1, SL2 and S4 are abnormal			
				Traveling 3rd or 4th				Traveling 1st or 2nd											
Solenoid			Gear	Solenoid			Gear	Solenoid			Gear	Solenoid			Gear	Solenoid			Gear
SL1	SL2	S4		SL1	SL2	S4		SL1	SL2	S4		SL1	SL2	S4		SL1	SL2	S4	
x	x	OFF	3rd	x	ON ↓ OFF	x	3rd	x	ON	x	2nd	ON ↓ OFF	x	x	3rd	x	x	x	3rd
x	x	OFF	3rd	x	ON ↓ OFF	x	3rd	x	ON	x	2nd	OFF	x	x	3rd	x	x	x	3rd
x	x	OFF	3rd	x	OFF	x	3rd	x	OFF ↓ ON	x	2nd	OFF	x	x	3rd	x	x	x	3rd
x	x	ON	4th	x	OFF	x	3rd	x	OFF ↓ ON	x	2nd	OFF	x	x	3rd	x	x	x	3rd

*: B_1 is constantly operating.

Diagnosis

- When the engine & ECT ECU detects a malfunction, the engine & ECT ECU makes a diagnosis and memorizes the failed section.
  Furthermore, the check engine warning light in the combination meter illuminates or blinks to inform the driver.
  The engine & ECT ECU will also store the DTCs (Diagnostic Trouble Codes) of the malfunctions.
  The DTCs can be accessed the use of the hand-held tester.

— Changes —

- The DTCs listed below have been added or discontinued.

▶ Added DTC ◀

○: added DTC

DTC No.	Detection Item	1AZ-FE		1AZ-FSE *3
		Europe*1	General Countries*2	
P0705	Transmission Range Sensor Malfunction	—	—	○
P0710	Transmission Fluid Temp. Sensor Circuit Malfunction	○	Continue	Continue
P0712	Transmission Fluid Temp. Sensor Circuit Low Input	○	○	○
P0713	Transmission Fluid Temp. Sensor Circuit High Input	○	○	○
P0717	Turbine Speed Sensor Circuit No Signal	○	○	○
P0724	Brake Switch Circuit Malfunction	—	—	○
P0741	Torque Converter Clutch Solenoid Performance	—	—	○
P0743	Torque Converter Clutch Solenoid Electrical	—	—	○
P0746	Pressure Control Solenoid Performance (Shift Solenoid Valve SL1)	—	—	○
P0748	Pressure Control Solenoid Electrical (Shift Solenoid Valve SL1)	○	○	○
P0766	Shift Solenoid Performance (Shift Solenoid Valve S4)	—	—	○
P0776	Pressure Control Solenoid Performance (Shift Solenoid Valve SL2)	—	—	○
P0778	Pressure Control Solenoid Electrical (Shift Solenoid Valve SL2)	○	○	○
P0793	Intermediate Shaft Speed Sensor Malfunction	○	○	○
P0982	Shift Solenoid Control Circuit Low (Shift Solenoid Valve S4)	○	○	○
P0983	Shift Solenoid Control Circuit High (Shift Solenoid Valve S4)	○	○	○
P2716	Pressure Control Solenoid Electrical (Shift Solenoid Valve SLT)	○	○	○
P2769	Park/Neutral Position Switch Malfunction (Neutral Start Switch)	○	○	—

▶ Discontinued DTC ◀

Type		DTC No.
1AZ-FE	Europe*1	P0750, P0753, P0755, P0758, P0765, P0768, P770, P0773, P1520, P1725, P1730, P1760, P1780
	General Countries*2	P0753, P0758, P0773
1AZ-FSE*3		P0711, P0750, P0753, P0755, P0758, P0765, P0768, P0770, P0773, P1520, P1725, P1730, P1760, P1780

*1:(1AZ-FE, Europe) previous models; U240E
*2:(1AZ-FE, General Countries) previous models; A241E
*3:(1AZ-FSE, Europe) previous models; U240E

■U341E AUTOMATIC TRANSAXLE

1. General

The compact and high-capacity 4-speed U341E automatic transaxle [Super ECT (Electronic Controlled Transaxle)] is used.
The following chart describes the changes from the previous model.

Destination	New Model	Previous Model	Change (from previous model)
Europe	U341E	A246E	Adopted newly. ● Multi-mode automatic transmission has been adopted. ● The shift lever with multi-mode automatic transmission has been adopted. ● DTC (Diagnostic Trouble Codes) changed

▶ Specification ◀

Model		New	Previous
Transaxle		U341E	A246E
Engine		1ZZ-FE	1ZZ-FE
Gear Ratio*1	1st	2.847	4.005
	2nd	1.552	2.208
	3rd	1.000	1.425
	4th	0.700	0.981
	Reverse	2.343	3.272
Differential Gear Ratio		4.237	2.962
Fluid Capacity*2 Liters (US qts, Imp.qts)		6.9 (7.3, 6.1)	7.6 (8.0, 6.7)
Fluid Type		ATF Type T-IV	ATF Type D-II
Weight (Reference)*3 kg (lb)		70 (31.8)	80.2 (36.4)

*1: Counter Gear Ratio Included
*2: Differential Included
*3: Weight shows the figure with the fluid fully filled

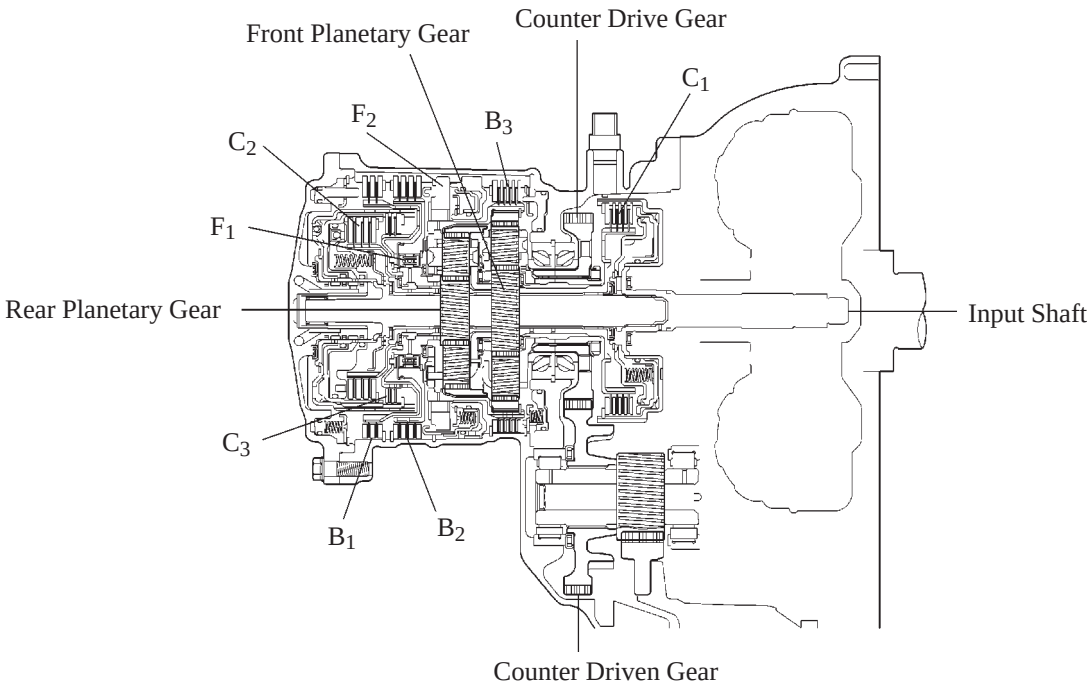

▶ Specification ◀

C_1	Forward Clutch	The No. of Discs	4
C_2	Direct Clutch		3
C_3	Reverse Clutch		3
B_1	OD & 2nd Brake		2
B_2	2nd Brake		4
B_3	1st & Reverse Brake		4
F_1	No.1 One-Way Clutch	The No. of Sprags	16
F_2	No.2 One-Way Clutch	The No. of Rollers	15
Front Planetary Gear		The No. of Sun Gear Teeth	46
		The No. of Pinion Gear Teeth	21
		The No. of Ring Gear Teeth	85
Rear Planetary Gear		The No. of Sun Gear Teeth	32
		The No. of Pinion Gear Teeth	21
		The No. of Ring Gear Teeth	75
Counter Gear		The No. of Drive Gear Teeth	52
		The No. of Driven Gear Teeth	53

2. Torque Converter

- This torque converter has optimally designed fluid passages and impeller configuration resulting in substantially enhanced transmission efficiency to ensure better starting, acceleration and fuel economy.
- Furthermore, a hydraulically operated lock-up mechanism which cuts power transmission losses due to slippage at medium and high speeds is used.

▶ Specification ◀

Torque Converter Type	3-Element, 1-Step, 2-Phase (with Lock-up Mechanism)
Stall Torque Ratio	1.8

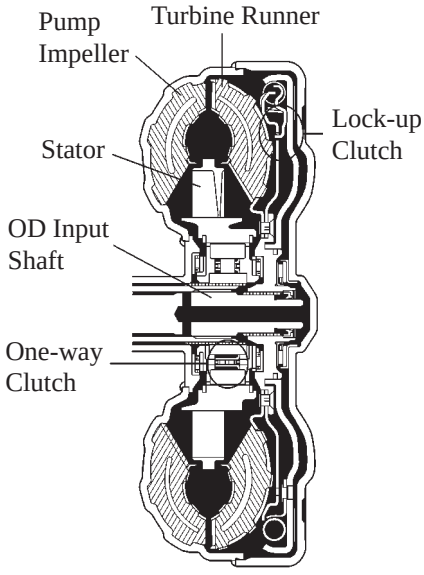

240CH102

3. Oil Pump

The shape of the teeth in the oil pump have been changed and the crescent has been discontinued, has been adopted.
As a result, the oil pump has been made more compact, and the driving torque has been reduced, thus attaining excellent volumetric efficiency during low-speed operation.

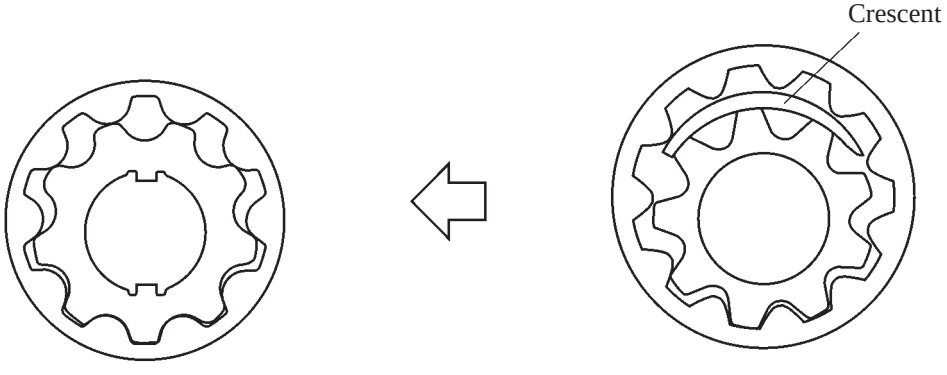

U341E **Conventional**

165CH10

4. Planetary Gear Unit

Construction

▶A CR-CR type planetary gear has been adopted in the planetary gear unit, which is located on the input shaft. This planetary gear is a type of planetary gear unit that joins the front and rear planetary carriers to the ring gear. As a result, the unit has been made significantly more simple and compact.

▶A centrifugal fluid pressure canceling mechanism has been adopted in the C_1 clutch, which is applied when the gears are shifted from 3rd to 4th.

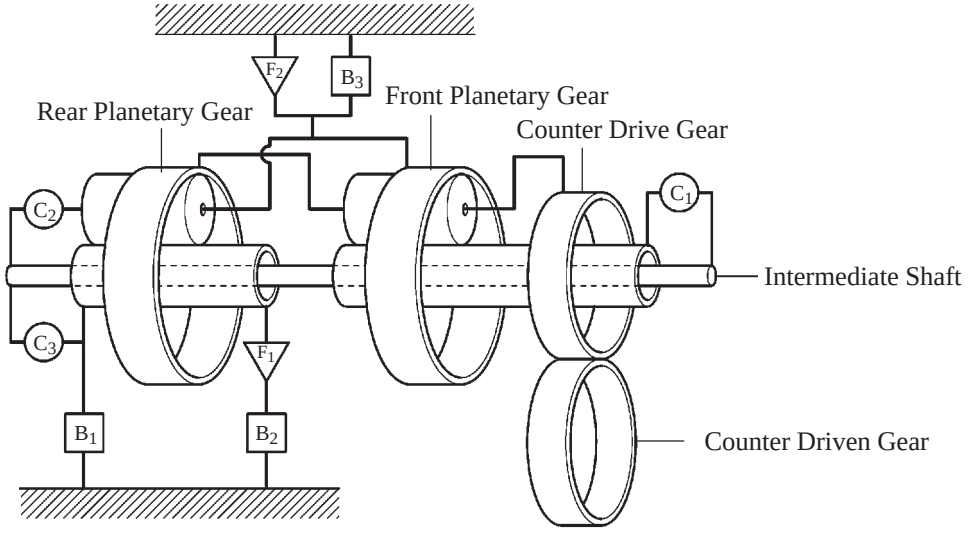

Function of Component

Component		Function
C_1	Forward Clutch	Connect input shaft and front planetary sun gear.
C_2	Direct Clutch	Connect intermediate shaft and rear planetary carrier.
C_3	Reverse Clutch	Connect intermediate shaft and rear planetary sun gear.
B_1	OD & 2nd Brake	Lock the rear planetary sun gear.
B_2	2nd Brake	Prevents rear planetary sun gear from turning counterclockwise.
B_3	1st & Reverse Brake	Lock the front planetary ring gear and rear planetary carrier.
F_1	No.1 One-Way Clutch	Prevents rear planetary sun gear from turning counterclockwise.
F_2	No.2 One-Way Clutch	Prevents front planetary ring gear and rear planetary carrier from turning counterclockwise.
Planetary Gears		These gears change the route through which driving force is transmitted, in accordance with the operation of each clutch and brake, in order to increase or reduce the input and output speed.

Transaxle Power Flow

Shift Lever Position	Gear	Solenoid Valve		Clutch			Brake			One-way Clutch	
		S_1	S_2	C_1	C_2	C_3	B_1	B_2	B_3	F_1	F_2
P	Park										
R	Reverse										
N	Neutral										
D, S (4)*	1st										
	2nd										
	3rd										
	4th										
S (3)*	1st										
	2nd										
	3rd										
S(2)*	1st										
	2nd										
S (1)*	1st										

: Operation

* : When the shift lever position is “S” and the range position indicator shows “4”, “3”, “2” or “1”

1st Gear (D or S mode 2, 3, 4 Position)

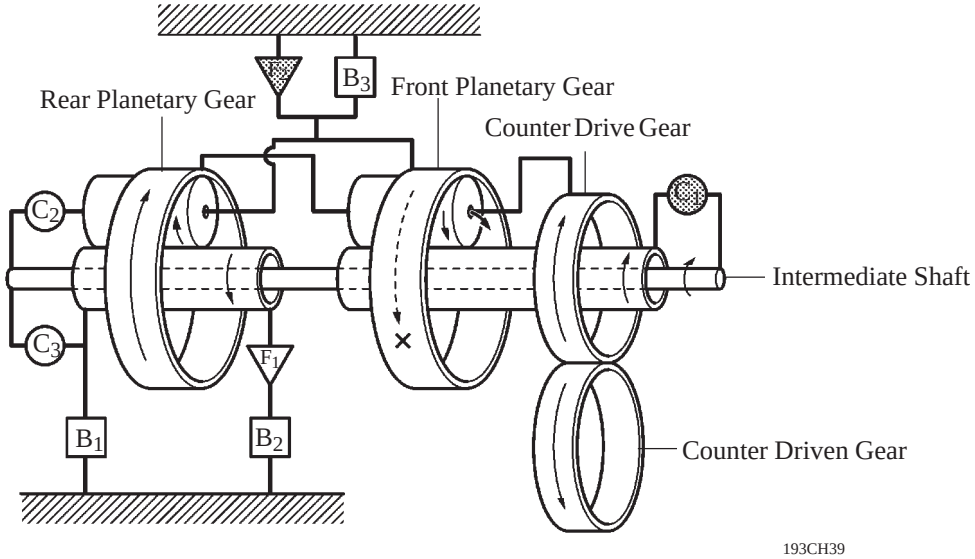

CH

2nd Gear (D or S mode 3, 4 Position)

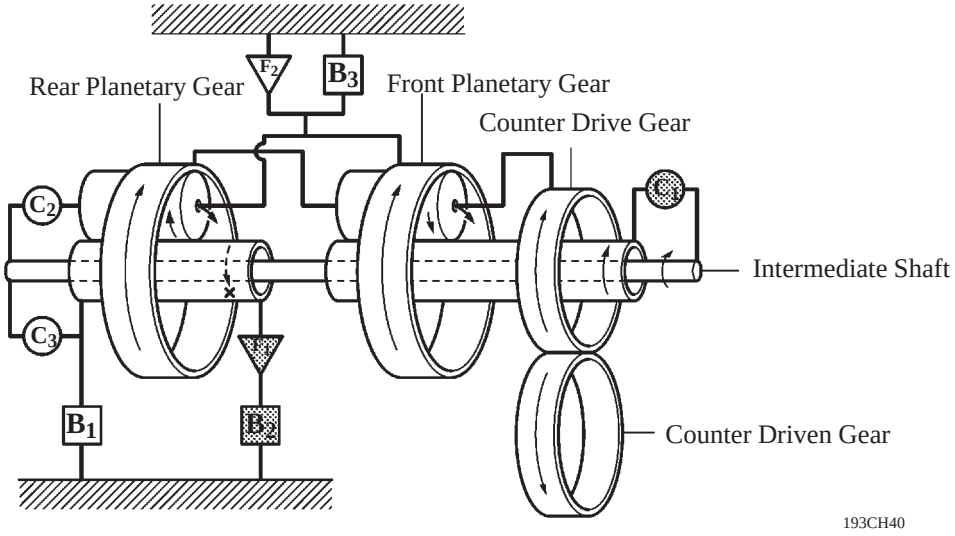

193CH40

3rd Gear (D or S mode 3, 4 Position)

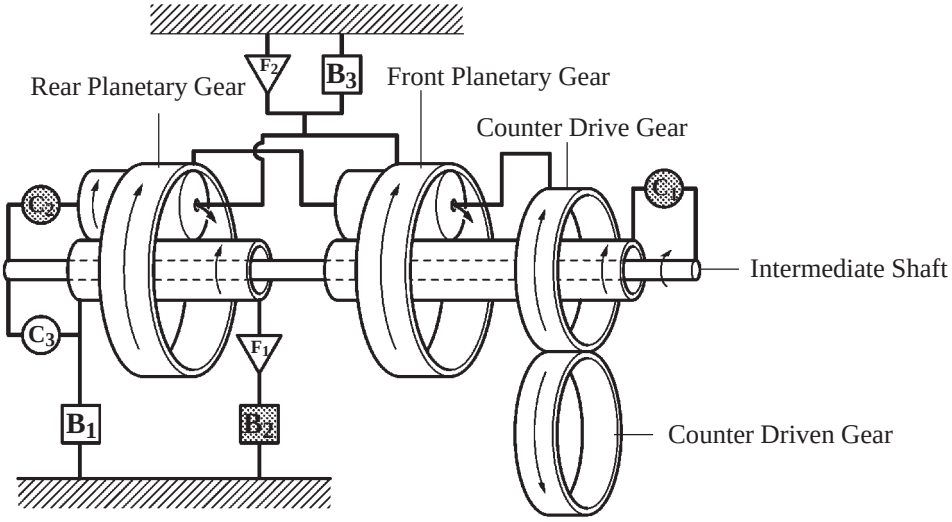

193CH41

4th Gear (D or S mode 4 Position)

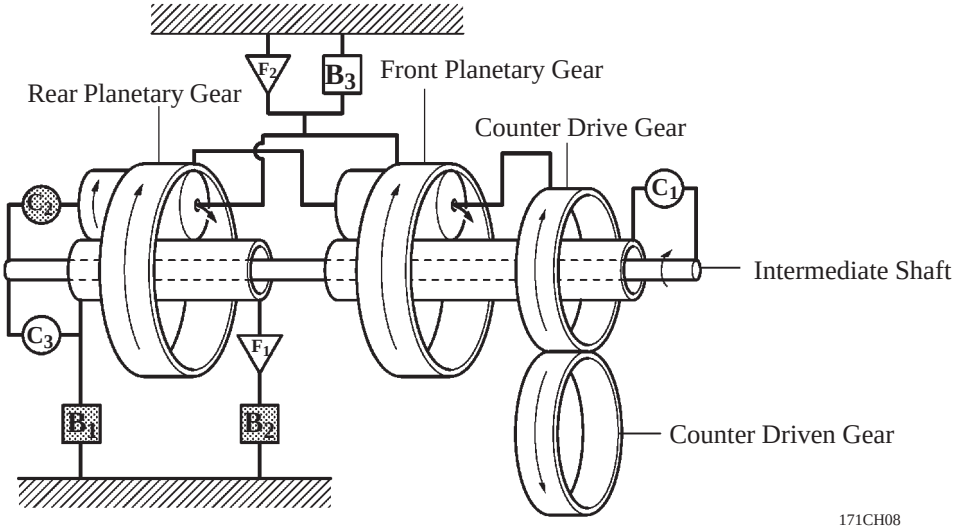

171CH08

2nd Gear (S mode 2 Position)

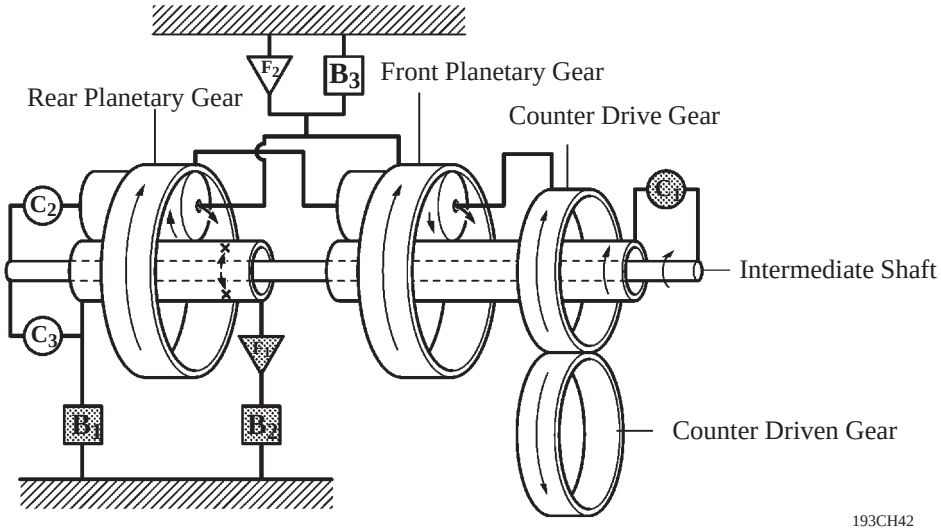

1st Gear (S mode 1 Position)

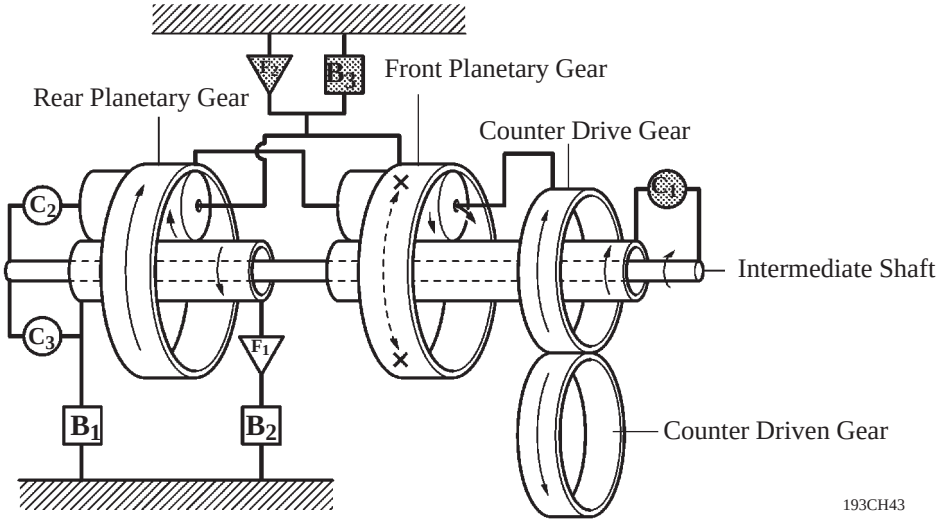

Reverse Gear (R Position)

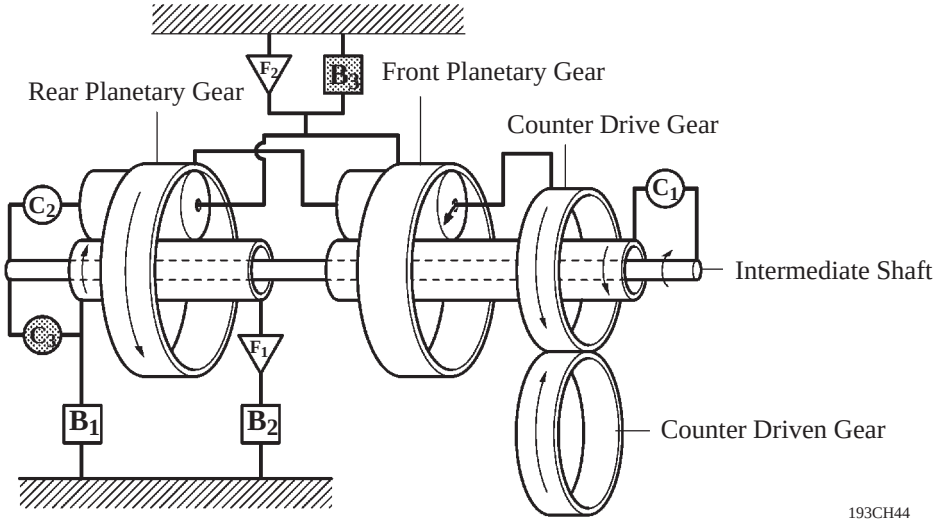

CH

Centrifugal Fluid Pressure Canceling Mechanism

- ▶A centrifugal fluid pressure canceling mechanism has been adopted in the C_1 clutch. There are two reasons for improving the conventional clutch mechanism:
- ▶To prevent the generation of pressure by centrifugal force applied to the fluid in the piston fluid pressure chamber (hereafter referred to as "chamber A") when the clutch is released, a check ball was provided. Therefore, before the clutch could be subsequently applied, it took time to fill chamber A.
- ▶During shifting, in addition to the original clutch pressure that is controlled by the valve body, centrifugal pressure acts on the fluid in the chamber A exerting increased pressure depending on RPM.
- ▶To address these two needs for improvement, a canceling fluid pressure chamber (hereafter referred to as "chamber B") has been provided opposite chamber A.

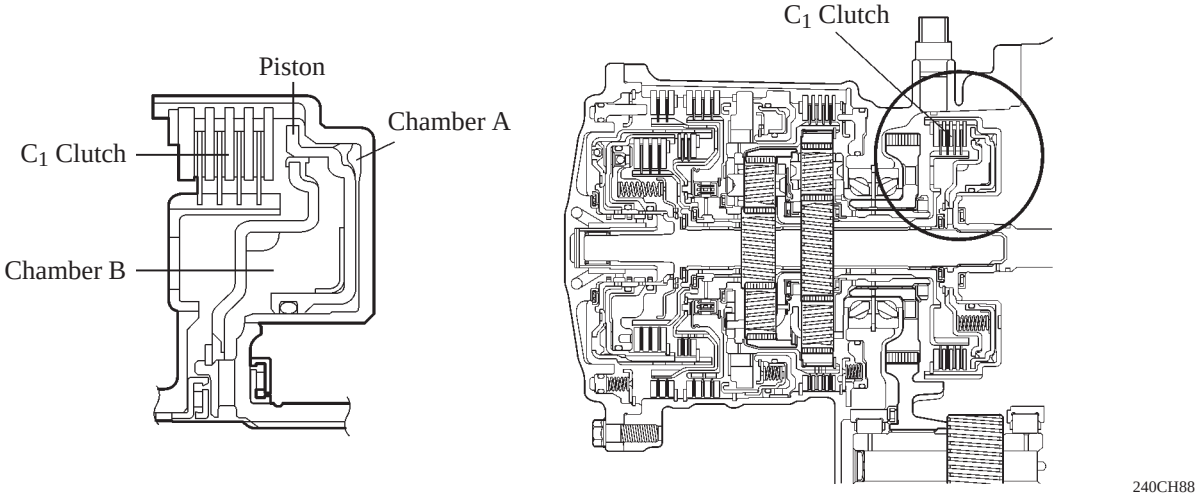

By utilizing the lubrication fluid such as that of the shaft, the same amount of centrifugal force is applied, thus canceling the centrifugal force that is applied to the piston itself. Accordingly, it is not necessary to discharge the fluid through the use of a check ball, and a highly responsive and smooth shifting characteristic has been achieved.

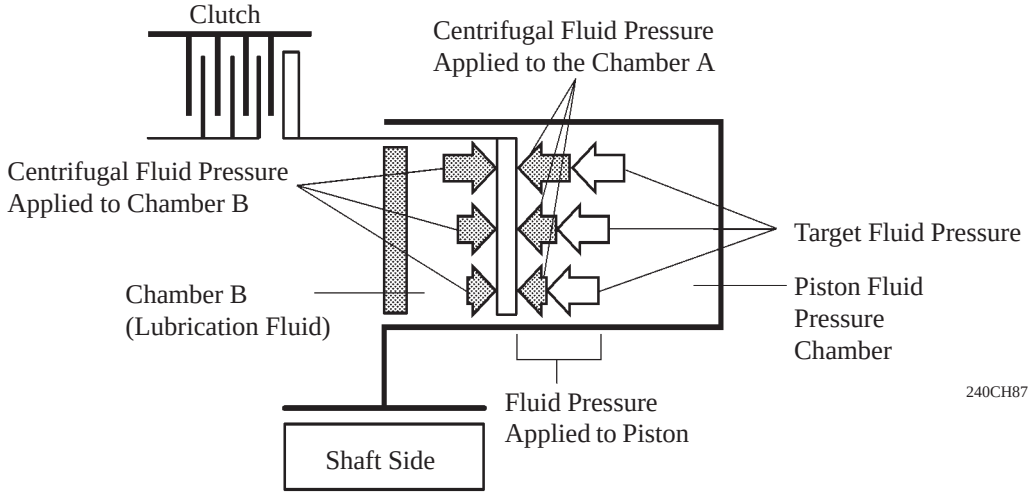

Centrifugal fluid pressure applied to chamber A	=	Centrifugal fluid pressure applied to chamber B				
Target fluid pressure (original clutch pressure)	=	Fluid pressure applied to piston	–	Centrifugal fluid pressure applied to chamber B		

5. Valve Body Unit

General

- The valve body consists of the upper and lower valve bodies and 6 solenoid valves.
- The 6 solenoid valves are installed in the lower valve body for serviceability.

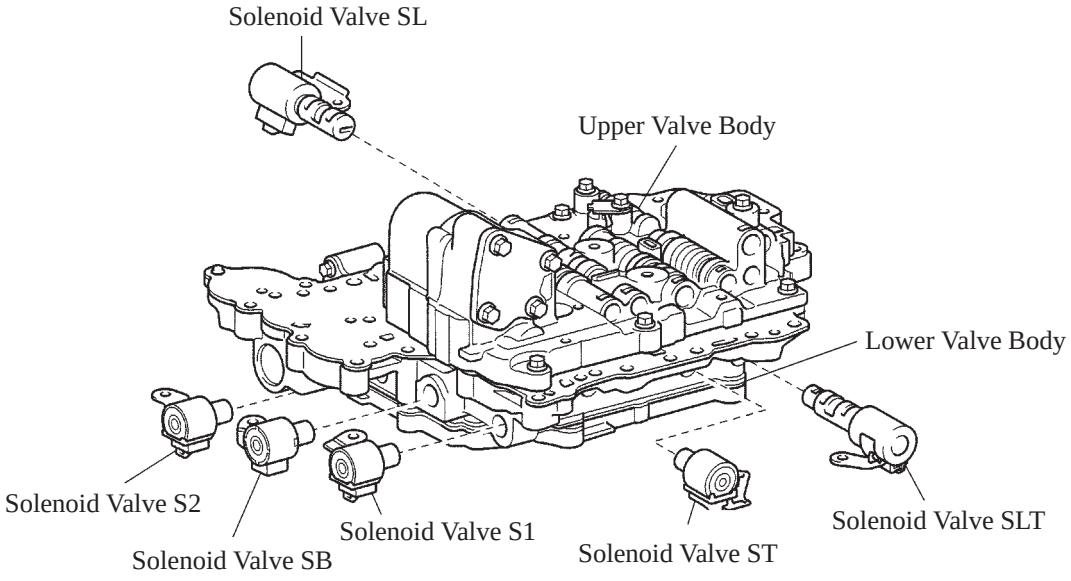

240CH21

▶ Upper Valve Body ◀

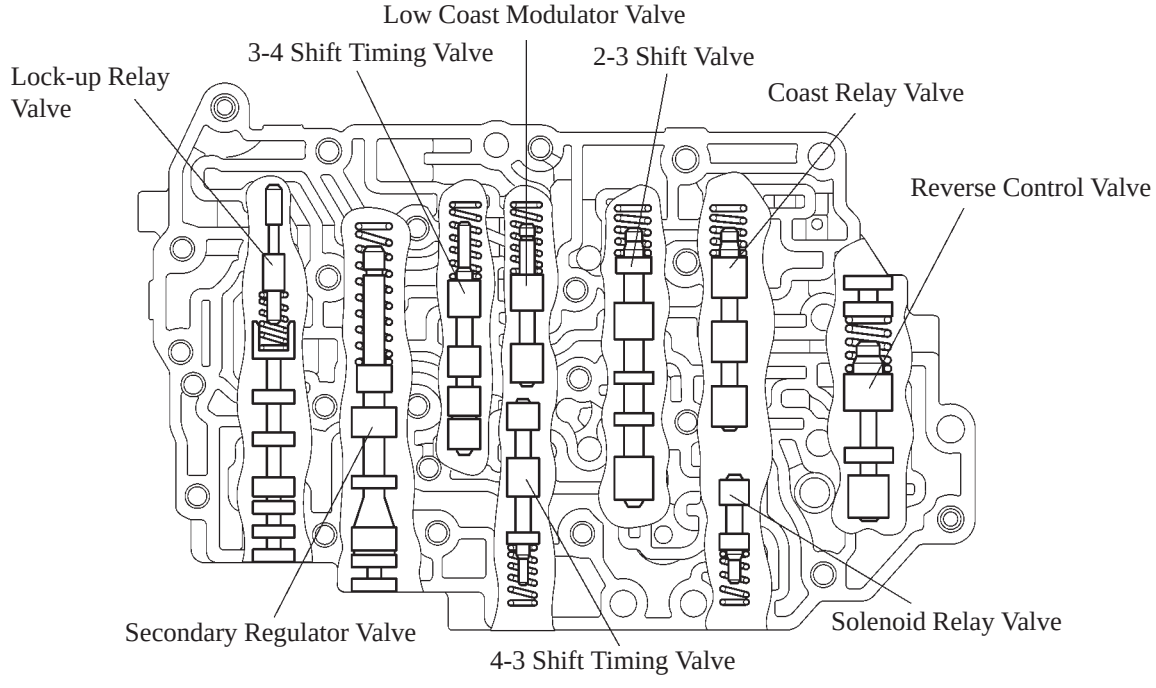

240CH103

CH

▶ Lower Valve Body ◀

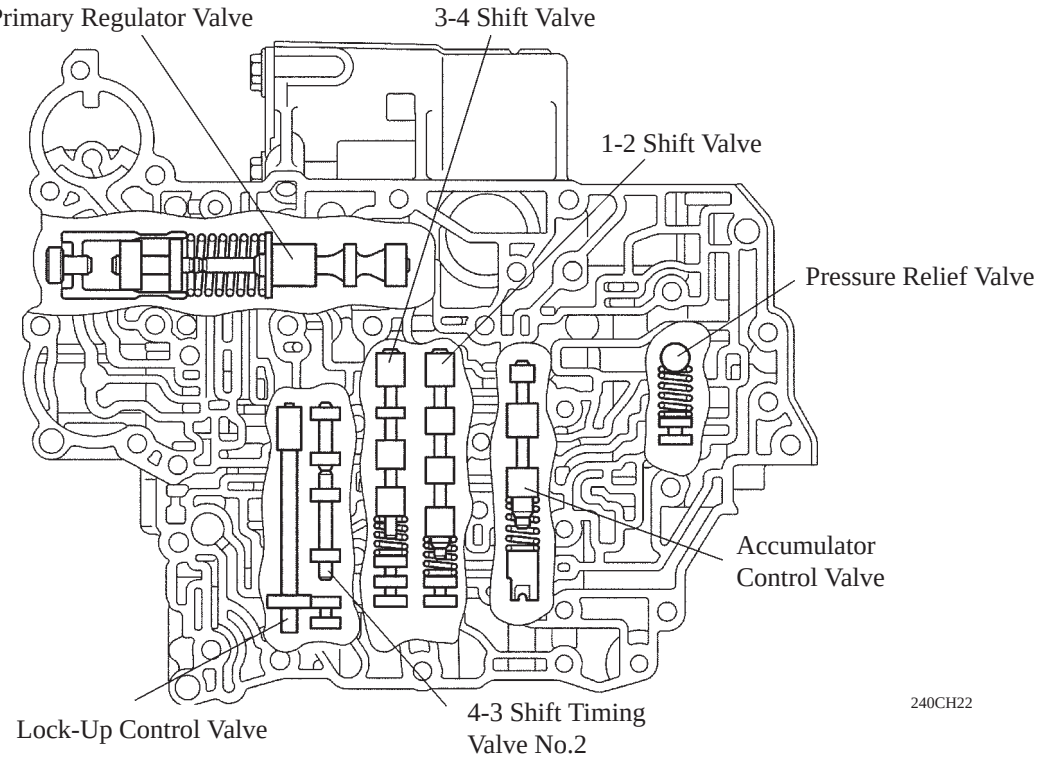

Function of Solenoid Valve

Solenoid Valve	Action	Function
S1	For 2-3 shift valve control	Shift gears by switching the 2-3 shift valve and controlling the C_2 clutch.
S2	For 1-2 and 3-4 shift valve control	Shift gears by switching the 1-2 and 3-4 shift valves and controlling 2 clutches (C_1 and C_2) and 2 brakes (B_1 and B_2).
ST	For clutch to clutch pressure control	Switches 3-4 and 4-3 shift valves.
SL	For clutch engagement pressure control	Controls the lock-up clutch.
SLT	For line pressure control	Controls the line pressure, secondary pressure, and accumulator back pressure.
SB	For engine brake control	Controls the 2nd brake (B_1) and 1st and reverse brake (B_3) pressures and performs the 1st and 2nd engine brake control.

6. Electronic Control System

General

The electronic control system of the U341E automatic transaxle consists of the controls listed below.

System	Function
Clutch Pressure Control	The solenoid valve SLT minutely controls the clutch pressure in accordance with the engine output and driving conditions.
Line Pressure Control	Actuates the solenoid valve SLT to control the line pressure in accordance with information from the engine & ECT ECU and the operating conditions of the transaxle.
Engine Torque Control	Retards the engine ignition timing temporarily to improve shift feeling during up or down shifting .
Shift Control in Uphill Traveling	Controls to restrict the 4th upshift or to provide appropriate engine braking by using the engine & ECT ECU to determine whether the vehicle is traveling uphill.
Shift Timing Control	The engine & ECT ECU sends current to the solenoid valve S1 and/or S2 based on signals from each sensor and shifts the gear.
Lock-up Timing Control	The engine & ECT ECU sends current to the shift solenoid valve SL based on signals from each sensor and engages or disengages the lockup clutch.
“N” to “D” Squat Control	When the shift lever is shifted from “N” to “D” position, the gear is temporarily shifted to 2nd and then to 1st to reduce vehicle squat.
2nd Start Control (SNOW Mode)	Enabling the vehicle to take off in the 2nd gear and thus helps to take off on ice or snow.
Multi-Mode Automatic Transmission	The engine and ECT ECU perform shift control upon receiving signals from the transmission control switch (+: up-shift range switch signal and –: down-shift range switch signal). This system is the same as that of the U241E. (See page CH-33)
Diagnosis	When the engine & ECT ECU detects a malfunction, the engine & ECT ECU makes a diagnosis and memorizes the failed section.
	To increase the speed for processing the signals, the 32-bit CPU of the engine & ECT ECU has been adopted.
Fail-safe	Even if a malfunction is detected in the sensors or solenoids, the engine & ECT ECU effects fail-safe control to prevent the vehicle’s drivability from being affected significantly.

2. Construction

The configuration of the electronic control system in the U341E automatic transaxle is as shown in the following chart.

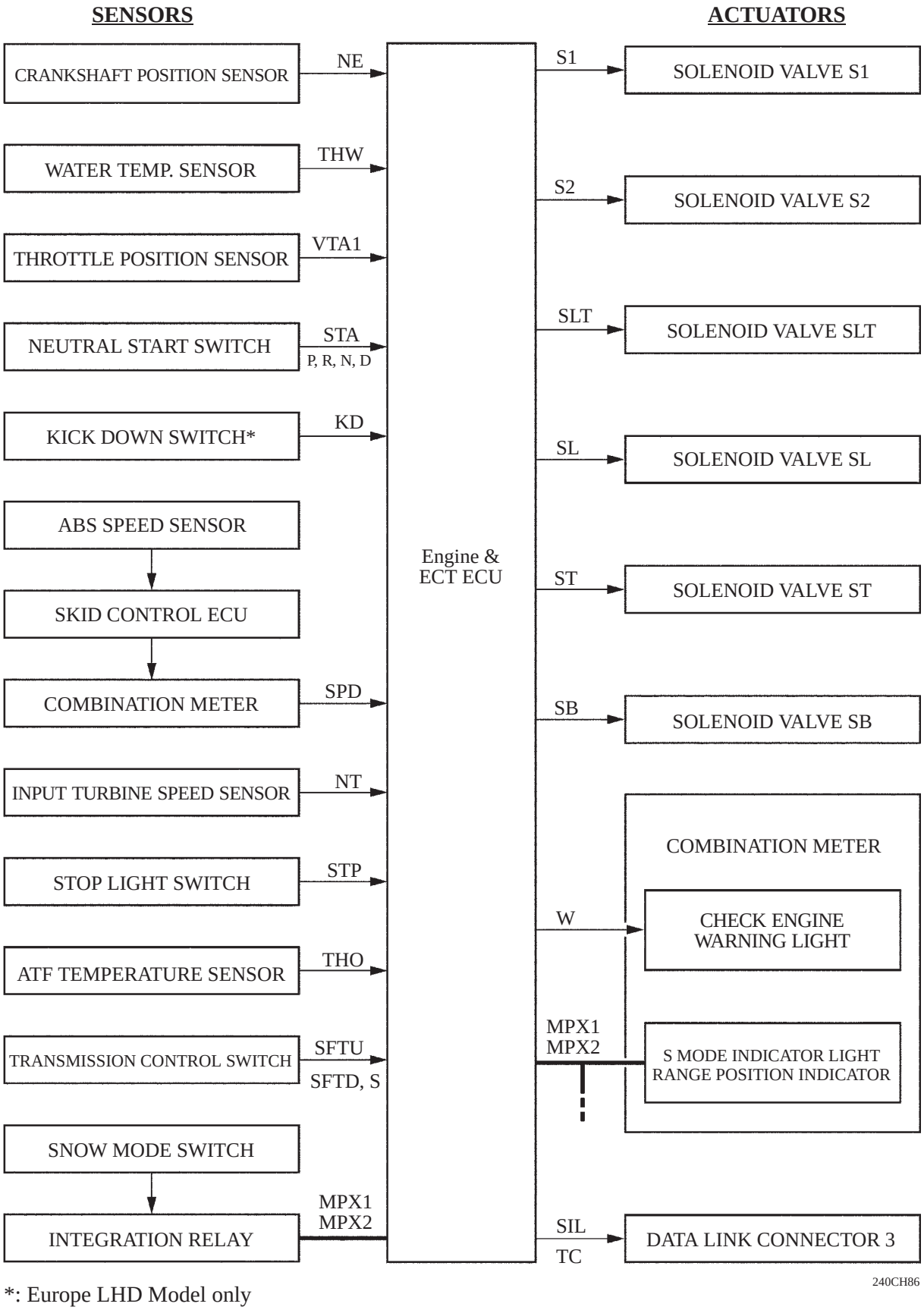

*: Europe LHD Model only

3. Layout of Component

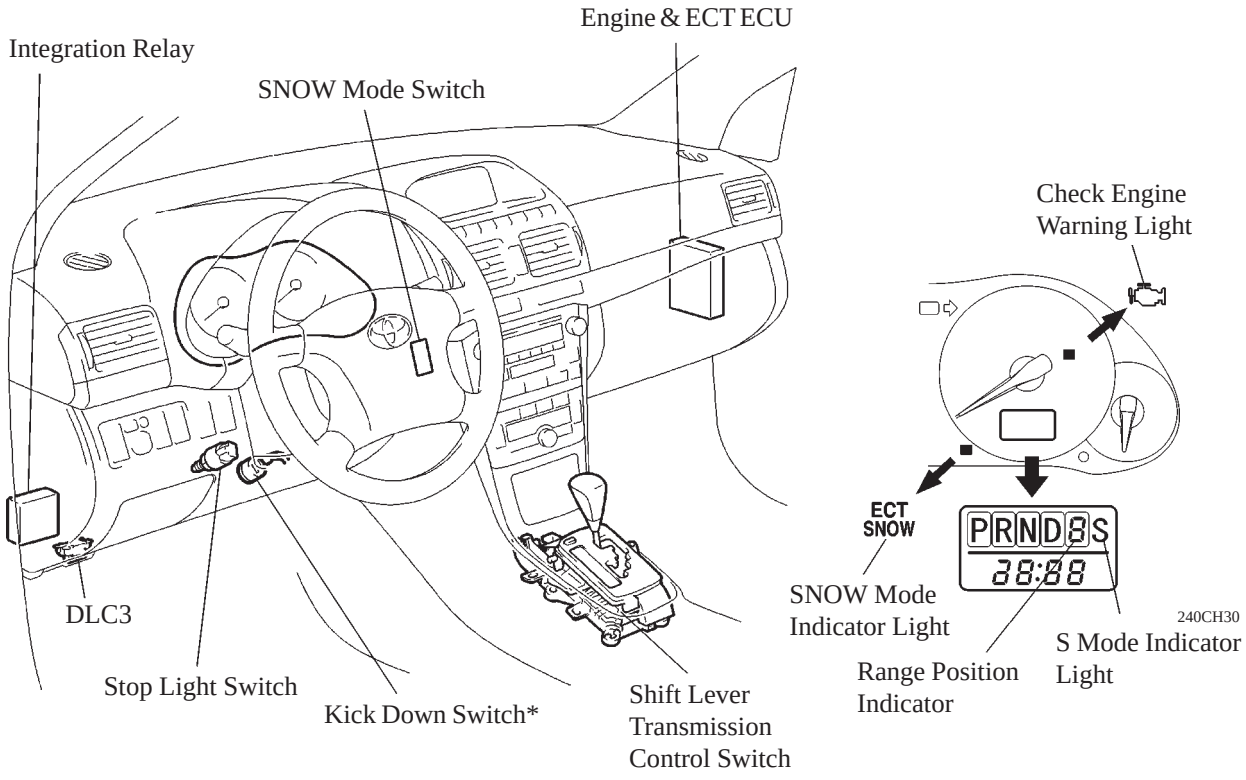

*: Only for the Engine LHD Models

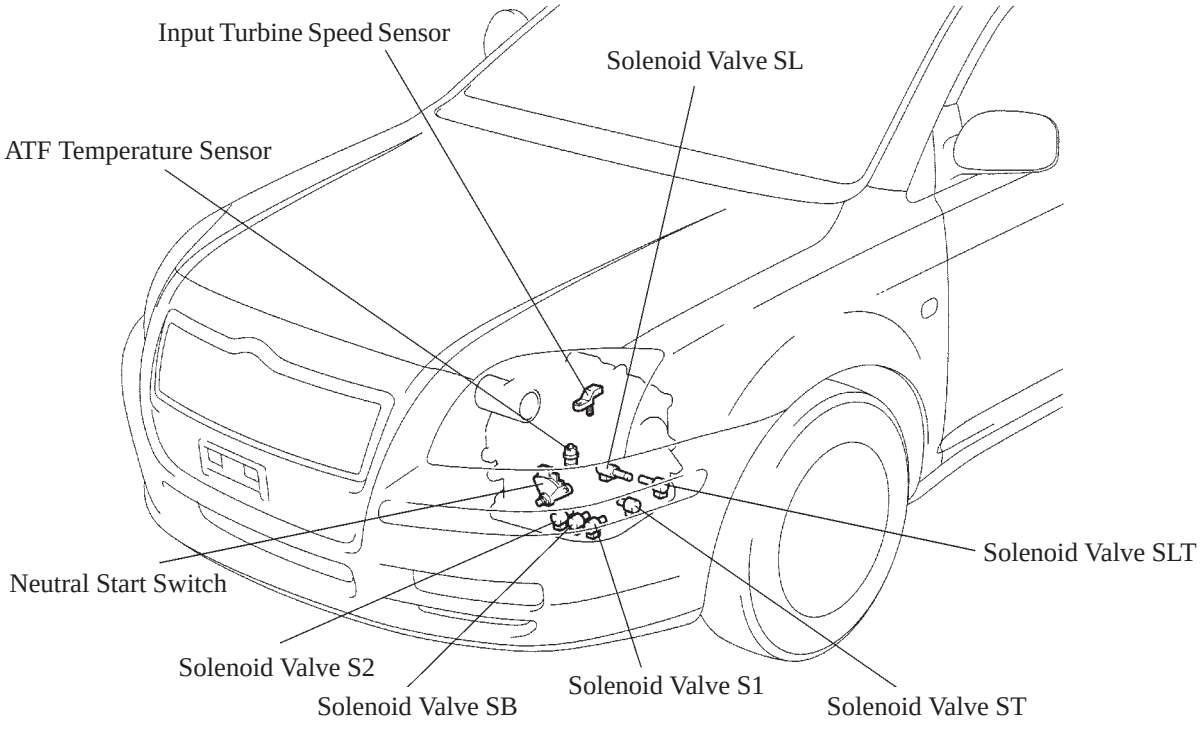

CH

Construction and Operation of Main Component

1) Fluid Temperature sensor

A fluid temperature sensor is installed in the valve body for direct detection of the fluid temperature. Fluid temperature sensor is used for adjusting clutch and brake pressures to keep the shift quality smooth.

2) Input Turbine Speed Sensor

This sensor detects the input speed of the transaxle. The forward clutch (C_1) drum is used as the timing rotor for this sensor.
Thus, the engine & ECT ECU can detect the timing of the shifting of the gears and appropriately control the engine torque and hydraulic pressure in response to the various conditions.

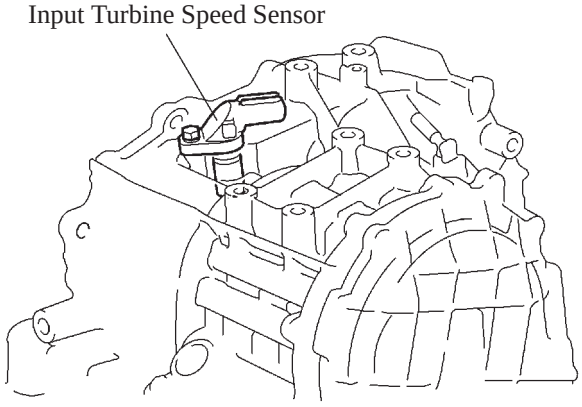

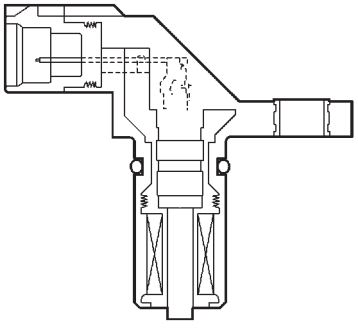

Cross Section

216CH12

Transmission Control Switch

The structure and operation of the transmission control switch is the same as that of the U241E. (See page CH-29)

Clutch Pressure Control

1) Clutch to Clutch Pressure Control

A clutch to clutch pressure control has been adopted for shifting from the 3rd to 4th gear, and from the 4th to 3rd gear. This actuates solenoid valves ST and SLT in accordance with the signals from the engine & ECT ECU, and guides this output pressure directly to the 4-3 timing valve and the 3-4 timing valve in order to regulate the line pressure that acts on the B_1 brake C_1 clutch. As a result, compact B_1 and C_1 accumulators without a back pressure chamber have been realized.
Smooth shifting is achieved by enabling the solenoid valve ST to switch the orifice of the 4-3 timing valve and the 3-4 timing valve.

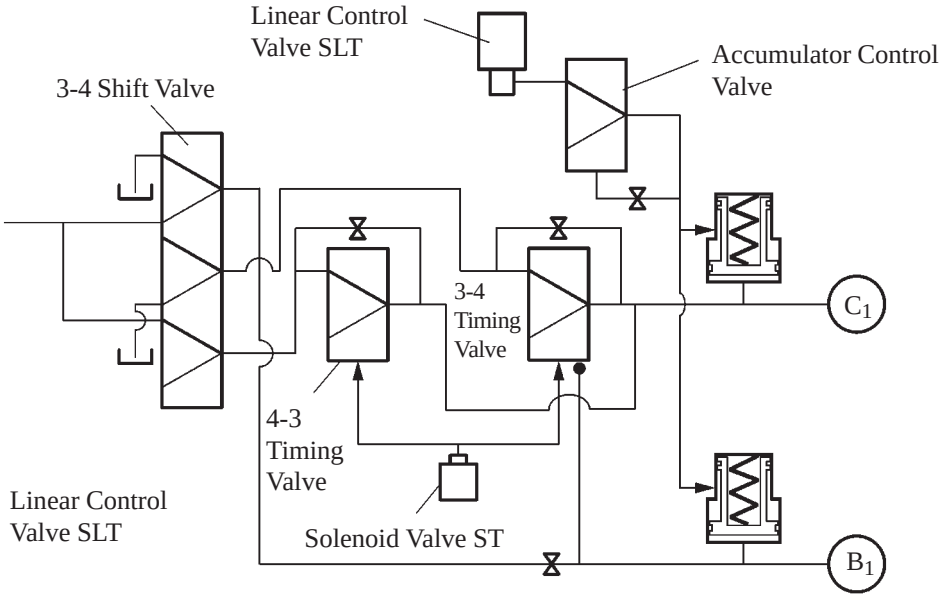

171CH12

2) Clutch Pressure Optimal Control

Solenoid valve SLT is used for optimal control of clutch pressure. The engine & ECT ECU monitors the signals from various types of sensors such as the input turbine speed sensor, allowing the solenoid valve SLT to minutely control the clutch pressure in accordance with engine output and driving conditions. Smooth shift characteristics are the result.

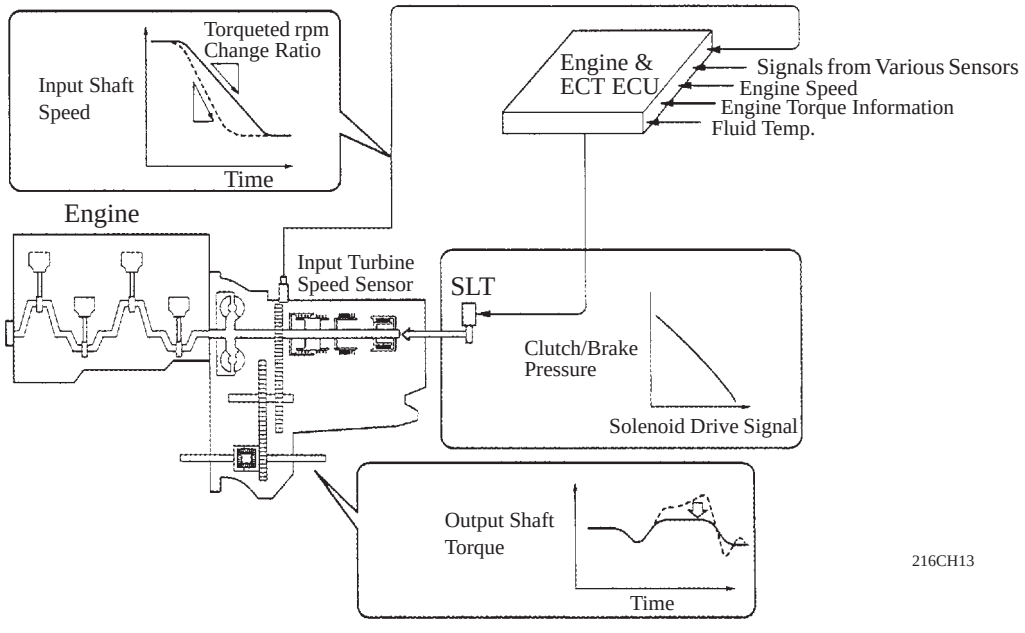

216CH13

Line Pressure Optimal Control

Through the use of the solenoid valve SLT, the line pressure is optimally controlled in accordance with the engine torque information, as well as with the internal operating conditions of the toque converter and the transaxle.
Accordingly, the line pressure can be controlled minutely in accordance with the engine output, driving conditions, and the ATF temperature, thus achieving smooth shifts and optimizing the workload in the oil pump.

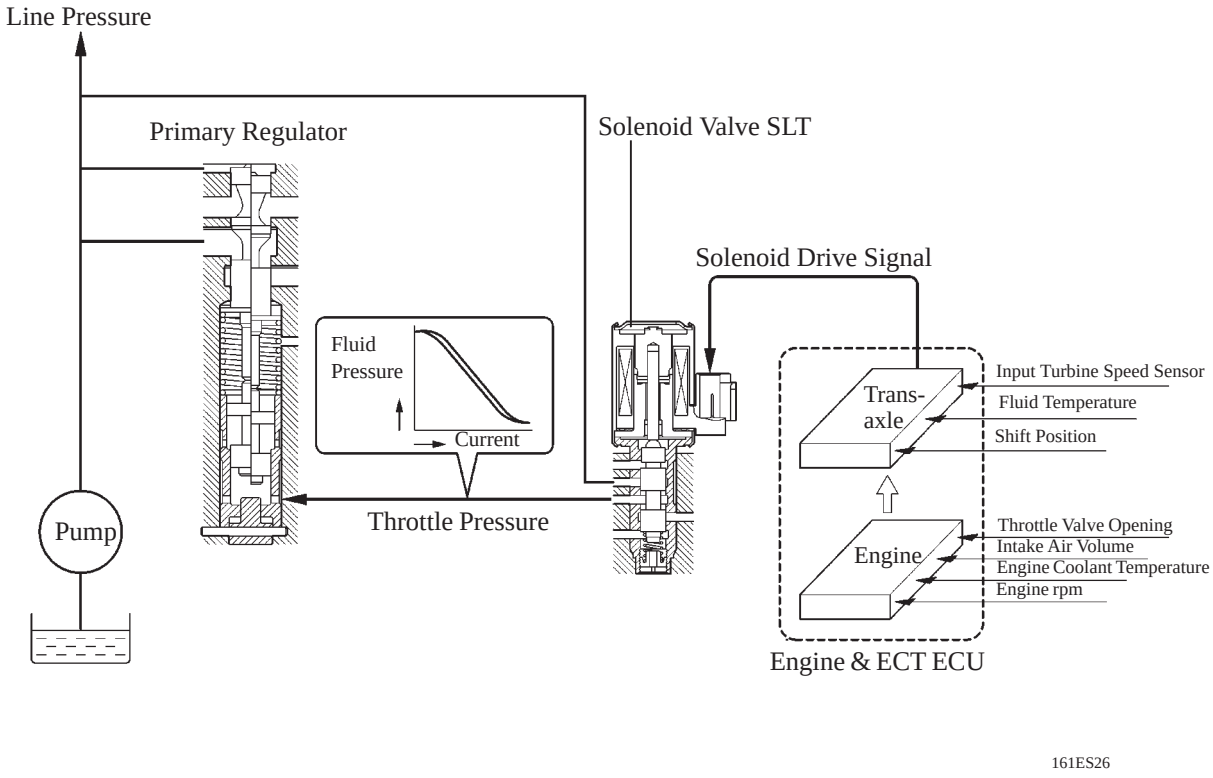

161ES26

2nd start Control

- This control enables the driver to use a snow mode (momentary type) switch to select the snow mode which allows the vehicle to start in 2nd gear, thus is used to help starting on ice or snow.
- When the snow mode is selected while the shift position is in the “D”, “S mode 4”, “S mode 3” or “S mode 2” position, the vehicle can start in the 2nd gear. After a start, if the shift position is in the “D”, “S mode 4”, or “S mode 3” position, transmission will shift up automatically into 3rd and 4th gears, as usual. If the shift position is in the “S mode 2” position, the transmission will continue to operate in the 2nd gear.

▶ Shift Program ◀

→ : Up Shift ← : Down Shift

Mode		Normal	Snow
Shift Position	D, S mode 4	1st ↔ 2nd ↔ 3rd ↔ 4th	2nd ↔ 3rd ↔ 4th
	S mode 3	1st ↔ 2nd ↔ 3rd	2nd ↔ 3rd
	S mode 2	1st ↔ 2nd ← 3rd	2nd ← 3rd
	S mode 1	1st ← 2nd	1st ← 2nd

Shifting Control in Uphill Driving

1) General

With shifting control in uphill driving, the engine & ECT ECU calculates the throttle opening angle and the acceleration rate to determine whether the vehicle is in the uphill state. While driving uphill on a winding road with ups and downs, the 4th upshift is restricted to ensure a smooth drive.

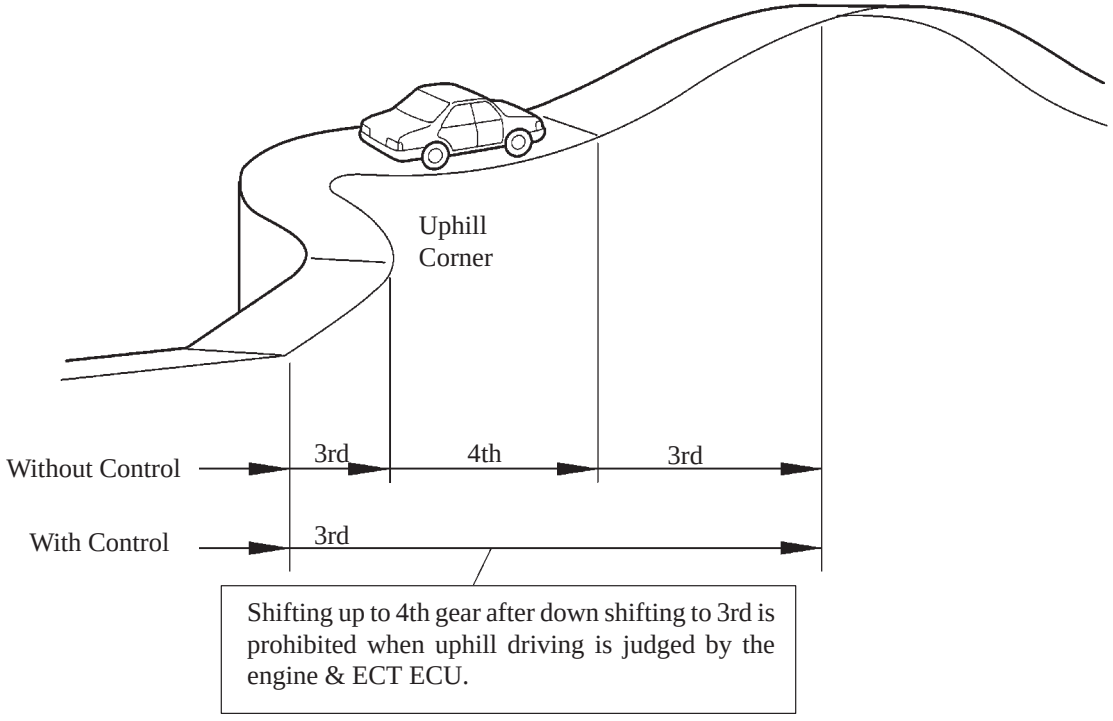

169CH53

2) Uphill Judgment

The actual acceleration calculated from the speed sensor signal is compared with the reference acceleration stored in the engine & ECT ECU to judge uphill driving.
The engine & ECT ECU judges an uphill condition if the actual acceleration is smaller than the reference acceleration, and restricts the 3rd to 4th upshift after a 4th to 3rd downshift has occurred.

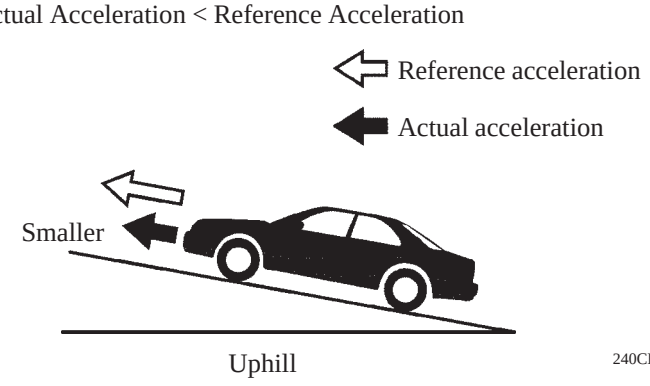

240CH27

Fail Safe

This function minimizes the loss of operability when any abnormality occurs in each sensor or solenoid.

▶ Fail Safe List ◀

Malfunction Part	Function
Vehicle Speed Signal	During a vehicle speed signal malfunction, 4th upshift prohibited.
Input Turbine Speed Sensor	During an input turbine speed signal, 4th upshift prohibited.
Fluid Temp. Sensor	During a fluid temp. sensor malfunction, 4th upshift prohibited.
Solenoid Valve SLT or SL	During a solenoid valves SLT or SL malfunction, 4th upshift prohibited.
Solenoid Valve SB	During a solenoid valve SB malfunction, S shift control prohibited, and the driving mode turns to the ordinal D range.
Water Temp. Sensor, Knock Sensor, or Throttle Position Sensor	During a engine coolant temp. sensor, knock sensor, or throttle position sensor malfunction, 4th upshift prohibited.
Solenoid Valve S1 or S2	During a malfunction in the solenoid valve S1 or S2 the current to the faulty solenoid valve is cut off and control is effected by operating the normal solenoid valves. Shift control is effected as described in the table below, depending on the failed solenoid.

When all solenoids are Normal			When solenoid valve S1 is abnormal			When solenoid S2 is abnormal			When solenoid S1 and S2 are abnormal		
Solenoid		Gear	Solenoid		Gear	Solenoid		Gear	Solenoid		Gear
S1	S2		S1	S2		S1	S2		S1	S2	
ON	ON	1st	x	ON ↓ OFF	3rd	ON	x	2nd	x	x	3rd
ON	OFF	2nd	x	OFF	3rd	ON	x	2nd	x	x	3rd
OFF	OFF	3rd	x	OFF	3rd	OFF	x	3rd	x	x	3rd
OFF	ON	4th	x	ON	4th	OFF	x	3rd	x	x	3rd

8. Diagnosis

- When the engine & ECT ECU detects a malfunction, it makes a diagnosis and memorizes the failed section. Furthermore, the check engine warning light in the combination meter illuminates or blinks to inform the driver.
- At the same time, the DTCs (Diagnosis Trouble Codes) are stored in memory. The DTCs can be read by connecting a hand-held tester. For details, see the Avensis Repair Manual (Pub. No. RM1018E).

Service Tip

The length of time to clear the DTC by disconnecting the battery terminal has been changed from 10 seconds to 1 minute.

■SHIFT CONTROL MECHANISM

1. General

- The shift control mechanism is changed from the previous straight shift lever, using a shift control cable, into a shift lever with multi-mode automatic transmission in which a shift control cable and the transmission control switch are used together.
- The key interlock mechanism is changed from the previous electrical type into mechanical type that is used together with the key lock cable.
- Regarding the construction, the previously used shift lever button becomes no more used and the shift lever projection is pressed on the shift lock by adopting the gate type shift lever in the shift lock mechanism.

2. Multi-Mode Automatic Transmission

General

New Avensis models equipped with an automatic transaxle have a multi-mode automatic transmission that enables the range position to be switched when the shift lever is moved into + or – in "S" position.
When the shift lever is engaged into S position, it can be moved to +, toward the front of the vehicle, and –, toward the rear. When moved toward + the range position upshifts, and when moved toward – the range position downshifts. The current range position is displayed in numerals from 1 to 4 on the range position indicator in the combination meter.
With the adoption of the S position, the previous shift lever's L position, 2 position, and O/D OFF switch were discontinued.

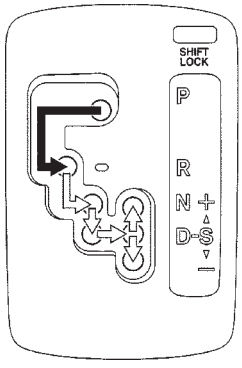

RHD Models

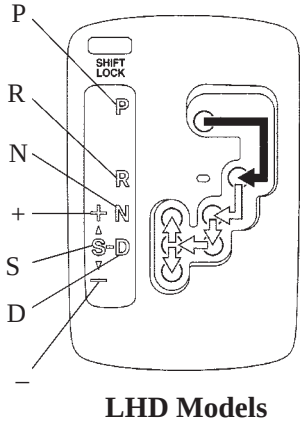

LHD Models

240CH32

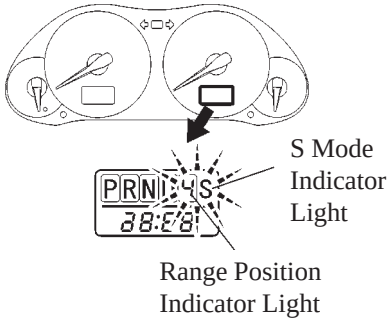

240CH33

Structure and Operation

Shifting from P Position to D Position

When the shift lever position is moved through P → R → N → D, it operates as a mechanical shift lever in which the shift lever cable engages and moves as in the previous model.
A sense of moderation in shift direction is attained due to the plate spring pressing against the moderation crest on the shift control lever.
A sense of moderation in select direction is attained due to the moderation pin installed on the shift lever pressing against the gate through the moderation spring.

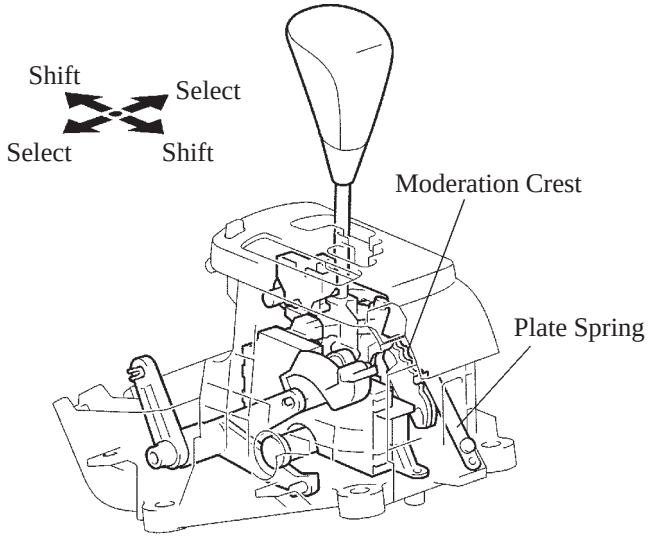

240CH34

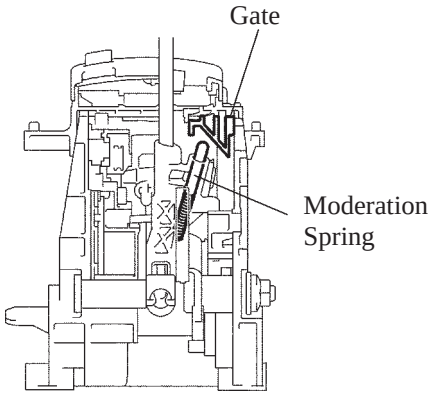

240CH35

Shifting from D Position to S Position

When the shift lever position is shifted from D to S, the shift lever projection separates from the hole in the shift control lever and the shift lever and shift lever cable are uncoupled. At this, the shift lever no longer has control of the shift direction.
At the same time, with the movement of select direction toward the shift lever S position, there is continuity between the S terminal and the IG terminal of the transmission control switch. The engine and ECT ECU receive this signal and shift into S mode.
At this time, the shift range position always moves into the 3 range position.

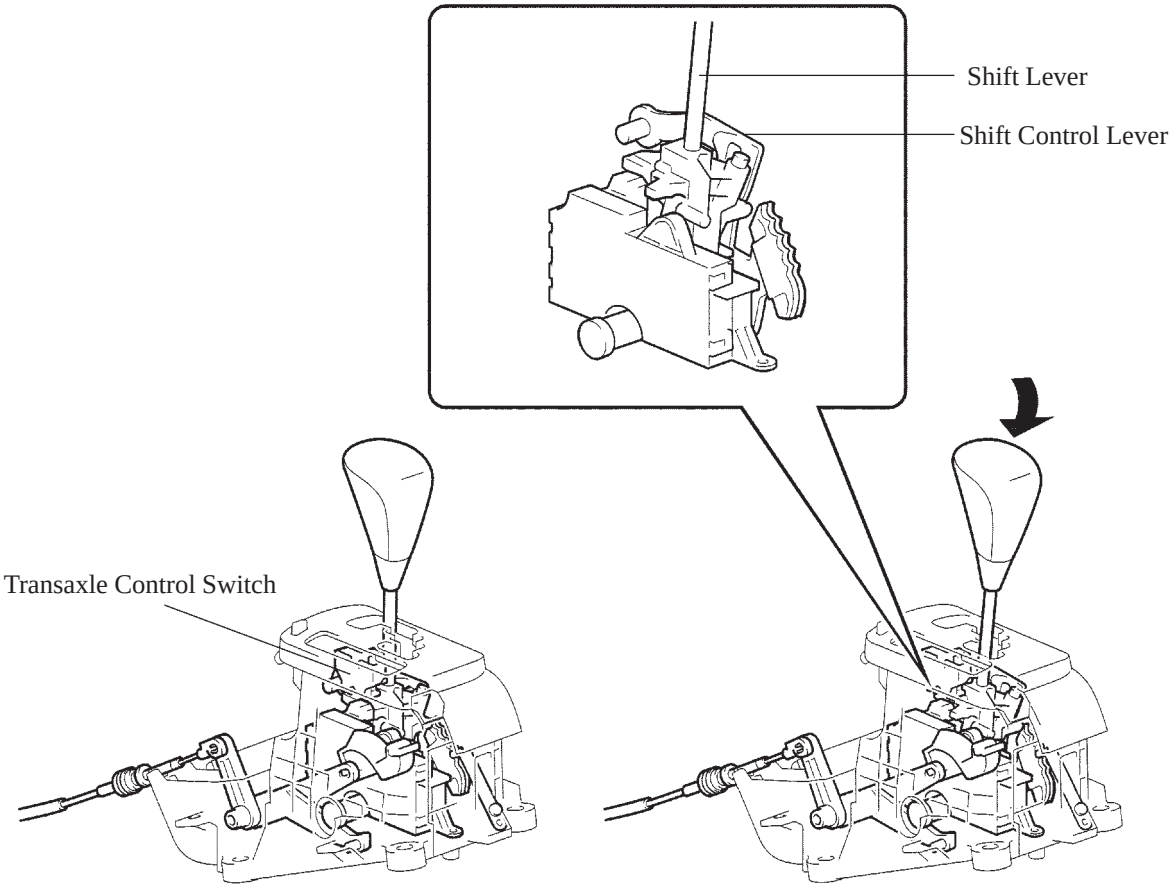

240CH36

▶ System Diagram ◀

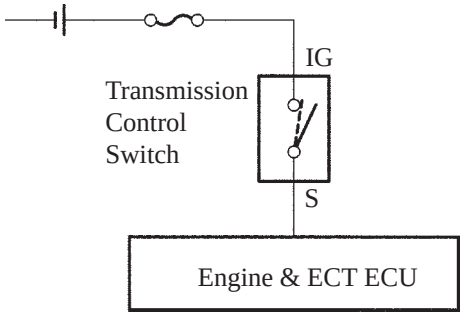

240CH37

Shifting to S Position + (up-shift range) & – (down-shift range)

In S position, when the shift lever is shifted to the + or – side, the shift lever projection turns either the transmission control switch up-shift range switch or down-shift range switch on. If the lever is moved to the + side, there is continuity between the SFTU terminal and the E terminal of the transmission control switch. If the lever is moved to the – side, there is continuity between the SFTD terminal and the E terminal. The engine and ECT ECU receive this signal and move the shift range position up or down.

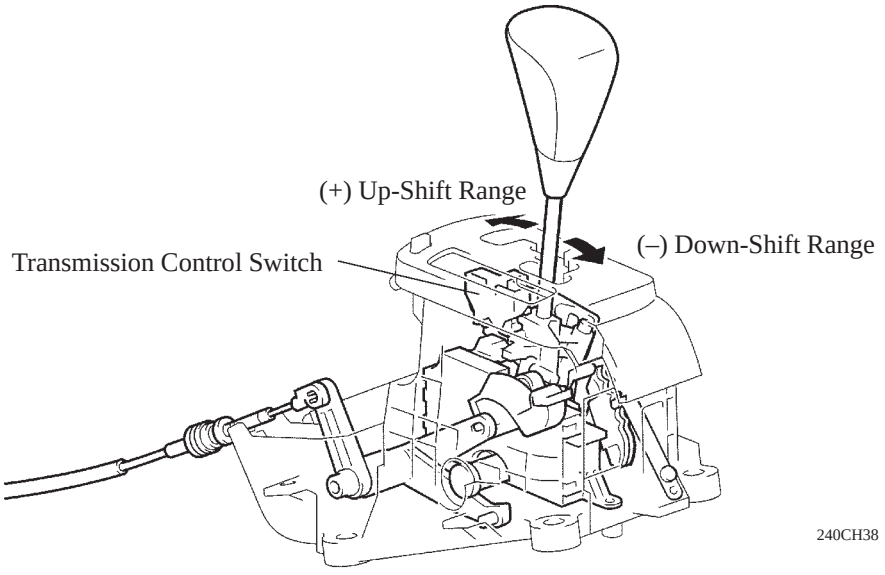

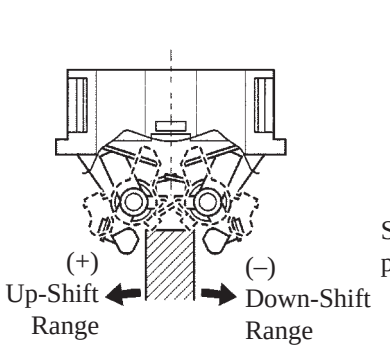

When there is continuity (standby)

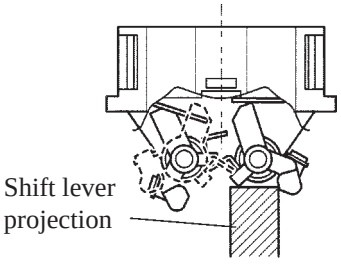

Down-shift range switch on

240CH39

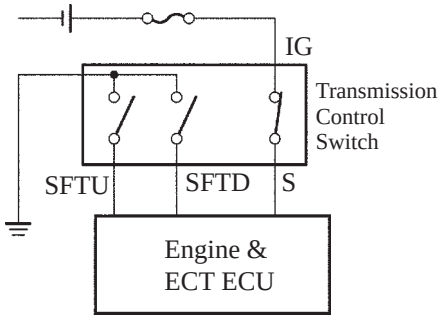

240CH40

Transmission Control Switch

Shift Program

When the shift lever is moved into the S position, the S mode indicator and range position indicator in the combination meter light up. When the vehicle stops, it shifts into 1st gear like an ordinary automatic transaxle. (When in SNOW mode, 2nd gear)

The usable gears are shown in the chart below:

Range Position Indicator	Usable Gears
4	1st ↔ 2nd ↔ 3rd ↔ 4th
3	1st ↔ 2nd ↔ 3rd
2	1st ↔ 2nd
1	1st

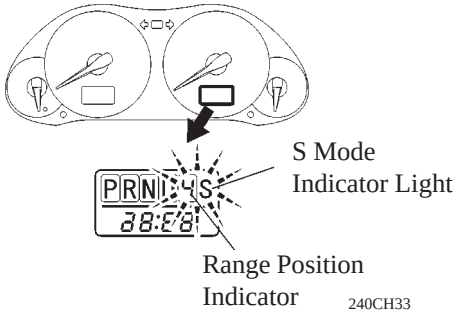

3. Shift Lock System

Key Interlock Mechanism

- The key interlock device prevents the key from being pulled out after the ignition switch is turned OFF, unless the shift lever is moved to the P position. Thus, the driver is urged to park the vehicle in the P position.
- A mechanical key interlock device that uses the key lock cable has been adopted.

Shift Lock Mechanism

- The shift lock mechanism prevents the shift lever from being shifted to a position other than the P position, unless the ignition switch is ON and the brake pedal is pressed. This prevents the vehicle from starting off suddenly against the wish of the driver.
- The shift lock ECU receives the inputs of the stop light switch and ignition switch signals. Upon receiving these signals, the shift lock ECU turns ON the shift lock solenoid in order to release shift lock.
- A shift lock override button, which manually overrides the shift lock mechanism, is provided.

Layout of Component

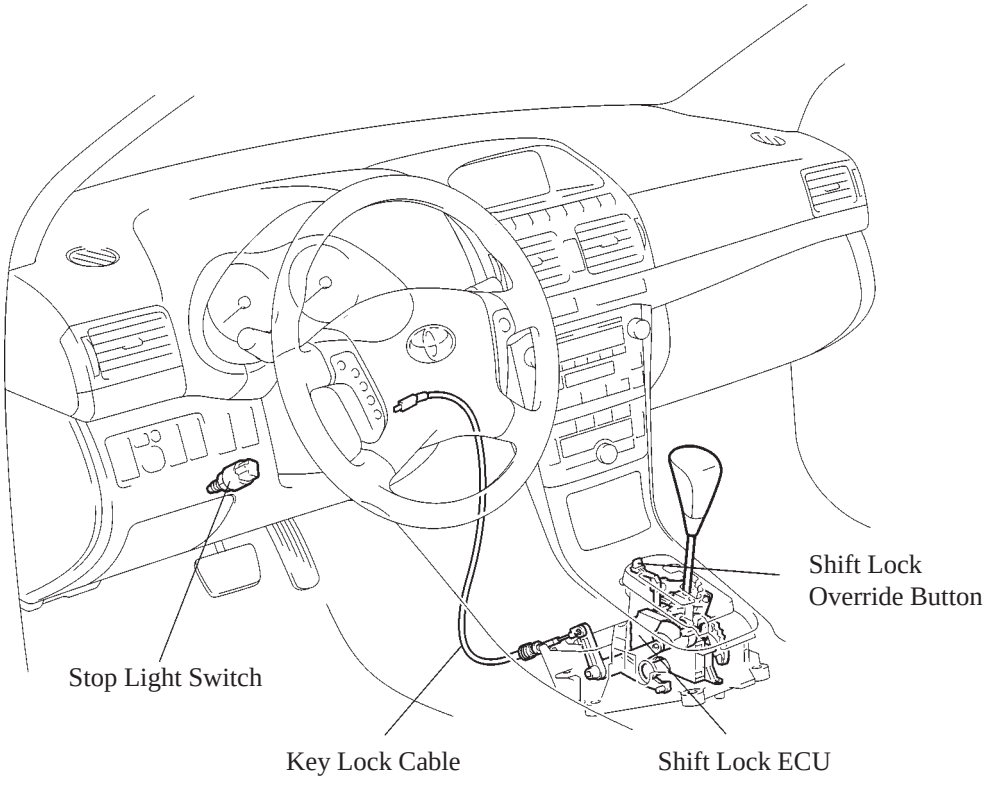

240CH42

SUSPENSION AND AXLE

■ SUSPENSION

1. General

- A MacPherson strut type independent suspension is used for the front.
- A double-wishbone type independent suspension is used for the rear.

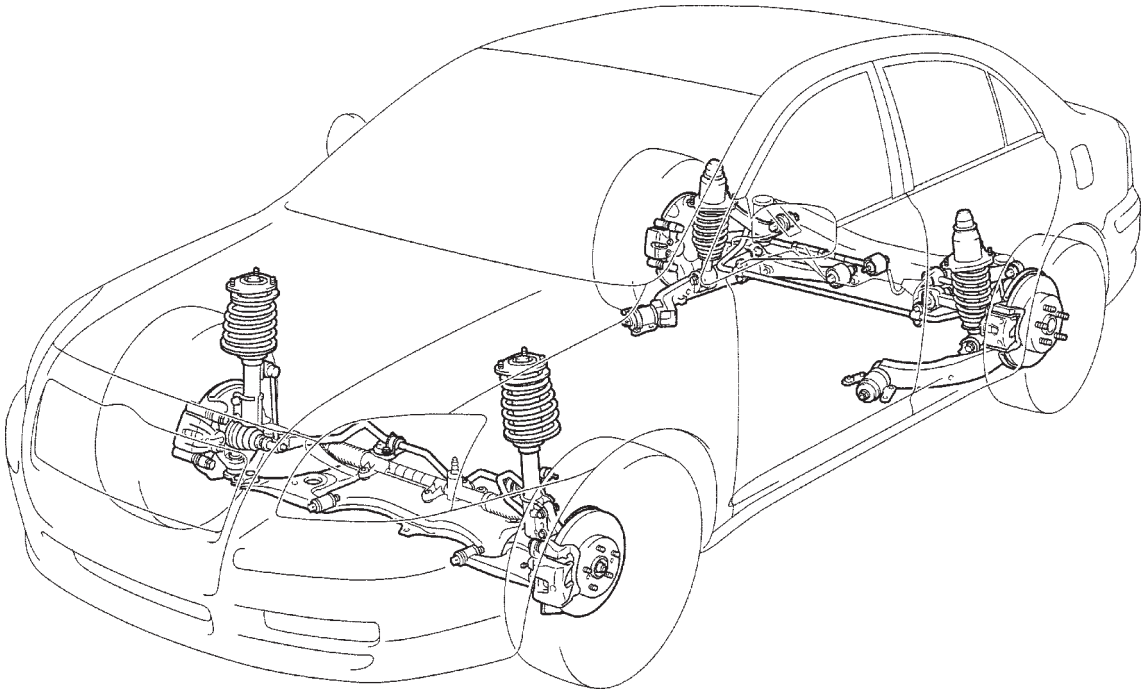

240CH43

▶ Specification ◀

Front Wheel Alignment	Type		MacPherson Strut
	Tread*1	mm (in.)	1503 (59.2)*2, 1515 (59.6)*3
	Caster*1	degrees	2° 51’
	Camber*1	degrees	–0° 31’
	Toe-in*1	mm (in.)	1.0 (0.04)
	King Pin Inclination*1	degrees	12° 21’
Rear Wheel Alignment	Type		Double-Wishbone
	Tread*1	mm (in.)	1501 (59.1)*2, 1513 (59.6)*3
	Camber*1	degrees	–0° 54’, –0° 30’*4
	Toe-in*1	mm (in.)	3.0 (0.12)

*1: Unloaded Vehicle Condition
*2: 205/55R16 Tire, 215/45R17 Tire
*3: 195/65R15 Tire
*4: Rough Road Package

2. Front Suspension

General

Through the optimal allocation of components, the front suspension realizes excellent riding comfort and controllability.

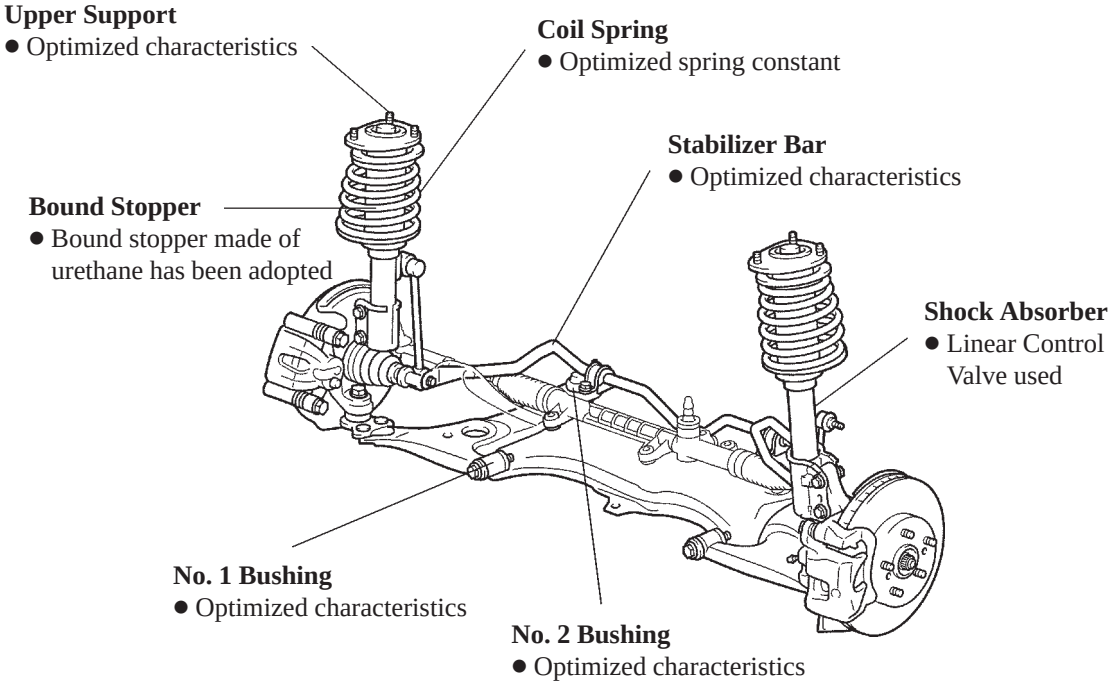

Service Tip

To adjust the camber of the front suspension, change the location of the bolts and nuts fastened onto the lower side of the shock absorber and front axle. For details, refer to the Avensis Repair Manual (Pub. No. RM1018E).

Shock Absorber

The shock absorber has adopted the two functions listed below to achieve both driving stability and ride comfort.

- A low-pressure (N_2) gas sealed type construction has been adopted to suppress cavitation.
- A linear control valve has been adopted to attain linear damping force characteristics.

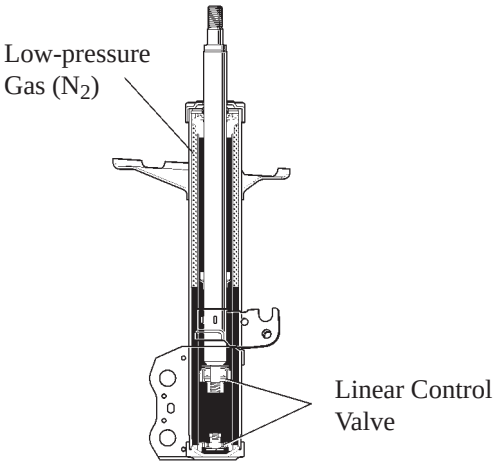

240CH45

Through the adoption of the linear control valve, the changes in the damping force are made constant at low piston speeds, thus making the vehicle behave more smoothly in relation to the steering operation.

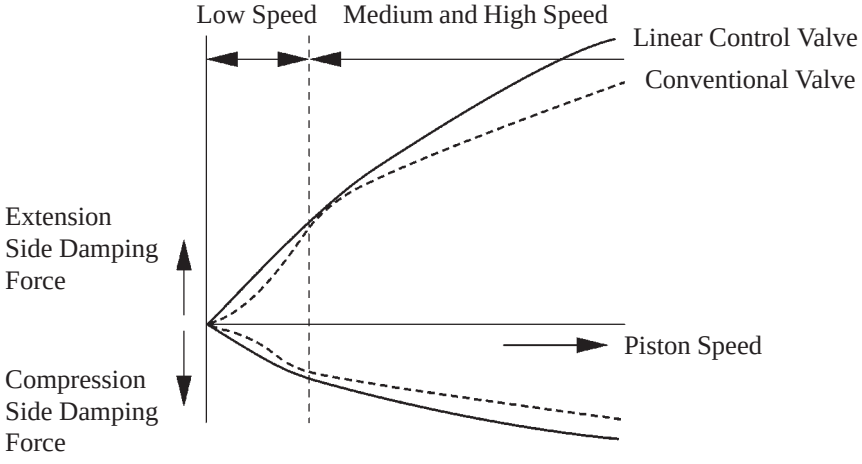

Damping Force Characteristics

199CH110

Service Tip

To prevent injury or hazard when discarding a low-pressure (N_2) gas sealed shock absorber, make sure to remove the gas before disposal. For details, refer to the Avensis Repair Manual (Pub. No. RM1018E).

3. Rear Suspension

General

The new Avensis features a newly developed double-wishbone type independent suspension composed of lower arms, upper control arms, and lower control arms. It realizes excellent stability and controllability thanks to proper toe-control function, anti-lift, and anti-squat geometry.

Shock Absorber
- Linear Control Valve use. For details, see page CH-62.

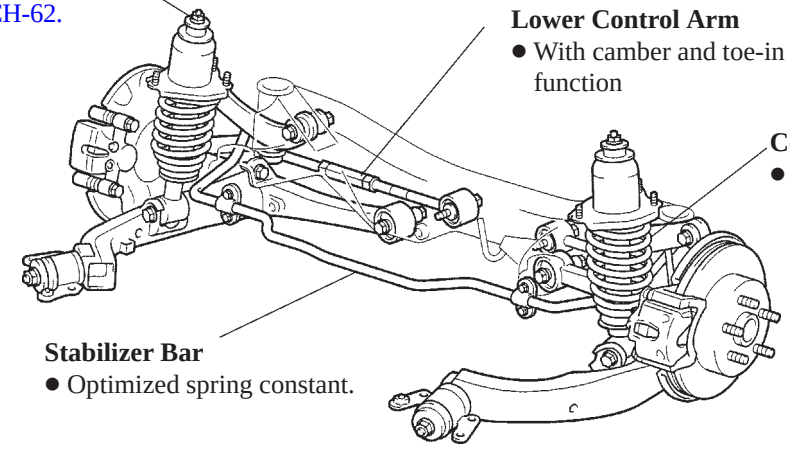

240CH46

Service Tip

To adjust the camber and toe-in of the rear suspension, turn the camber adjusting cams of the upper control arms and the tie rod adjusting tubes of the lower control arms. For details, see the Avensis Repair Manual (Pub. No. RM1018E).

Lower Arm and Upper Arm

The lower arms and upper control arm optimize the transition of toe dimension when the suspension is moving up and down, realizing excellent stability and controllability.

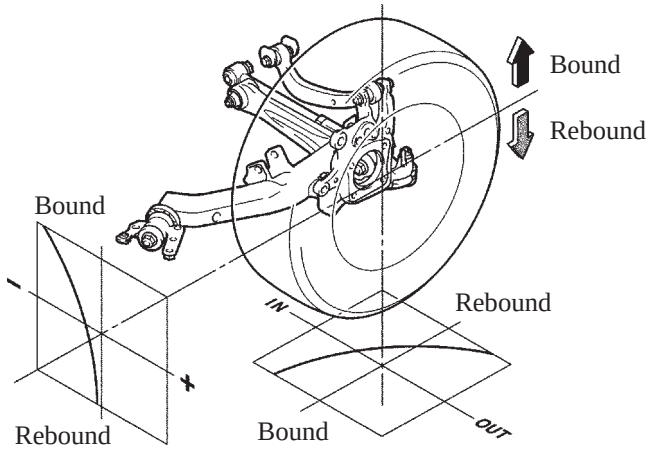

Transition of Camber Angle **Transition of Toe dimension**

240CH47

Toe-Control Function

1) General

- The front bushing “A” of the lower arm is mounted coaxially to the oscillating axis, and the rear bushing “B” is mounted parallel to the center of the vehicle. With respect to their rigidity, the bushings are stiff perpendicularly to their axis and soft in their axial direction.
- The rear axle is mounted via ball joint and bushing at two points of the lower arm. The ball joint “C” of the rear axle is mounted to the lower arm at an area that is closer to the axle center than the bushing “D” of the rear axle. And rear axle is connected to the lower control arm via ball joint “G”.

Through the implementation of the aforementioned measures, optimal toe control during cornering and braking has been made possible, resulting in excellent stability and controllability.

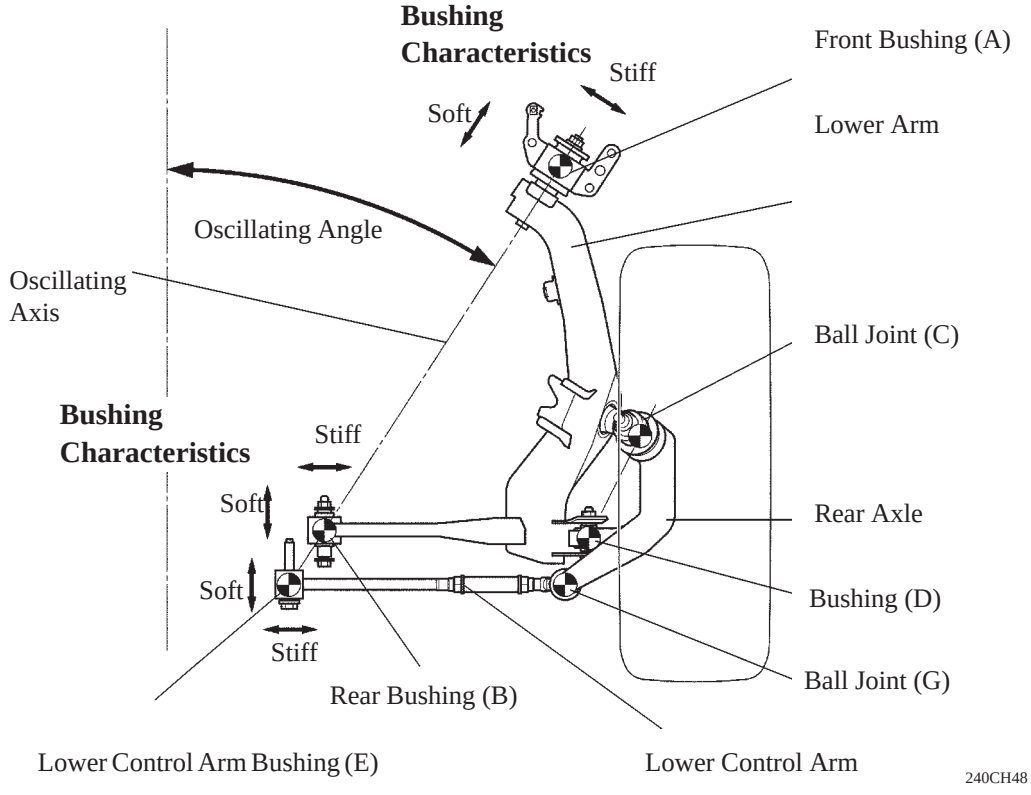

2) Cornering

As shown in the diagram below, the lateral force "F" acts on the suspension due to the force that is generated during cornering. At such a time, there are the following movements at the outside wheels.

- Ball joint "C" of the rear axle transmits lateral force "F" to the lower arm. This force "F" is distributed to front bushing "A," rear bushing "B" of the lower arm, and ball joint "G" of lower control arm.
- Front bushing "A" is mounted at an angle to lateral force "F." It flexes considerably in the direction of the oscillating axis. As a result, rear bushing "B" also flexes considerably, causing the front of the lower arm to rotate toward the inner.
- At this time, the lower control arm shifts rearward together with the rear axle centering on the vehicle-side bushing. However, it barely moves in the lateral direction, so the tires are rotated in a toe-in direction centering on rear axle "A."
- A force opposite to that of the outside wheels acts on the inside wheels, rotating them in a toe-out direction. As a result, excellent driving stability is realized during cornering.

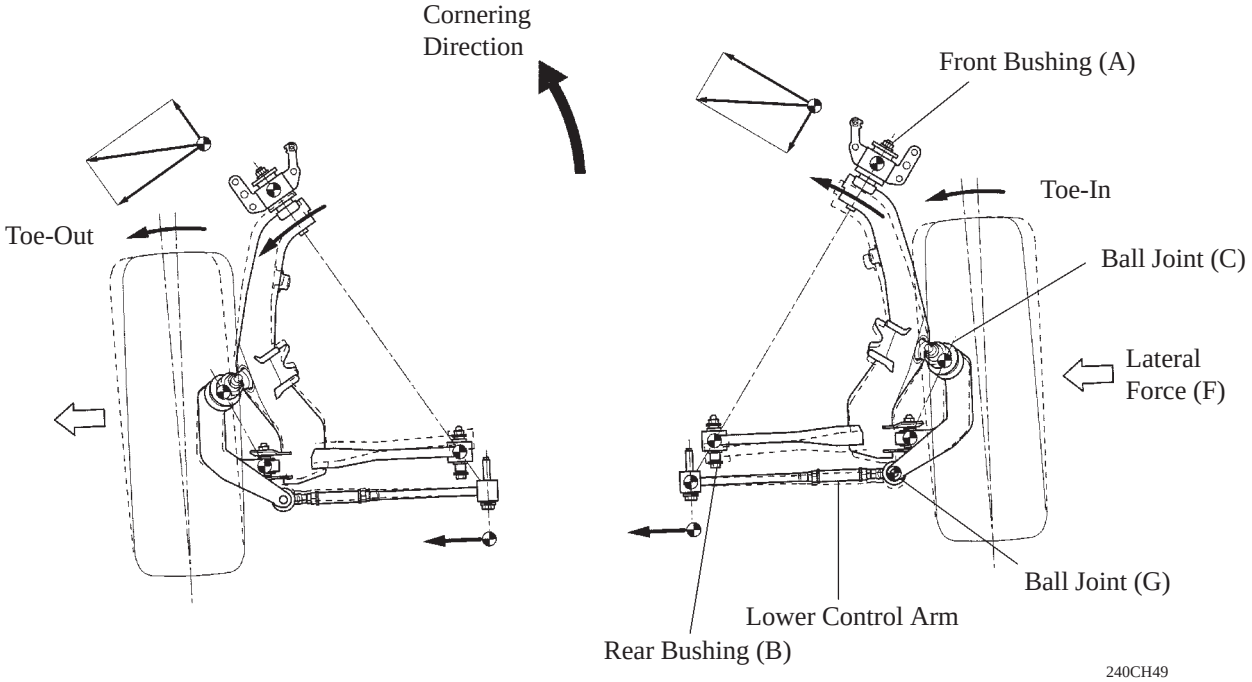

3) Braking

The braking force “BR” that acts on the tire generates a force that pushes the lower arm rearward, thus flexing the front bushing “A” and rear bushing “B” to flex in the axial direction.
As a result, the front of the lower arm rotates inward (just as in cornering) and the tire shifts in the toe-in direction, because the bushing “A” flexes along the oscillating axis. Thus, straightline stability is ensured during braking.

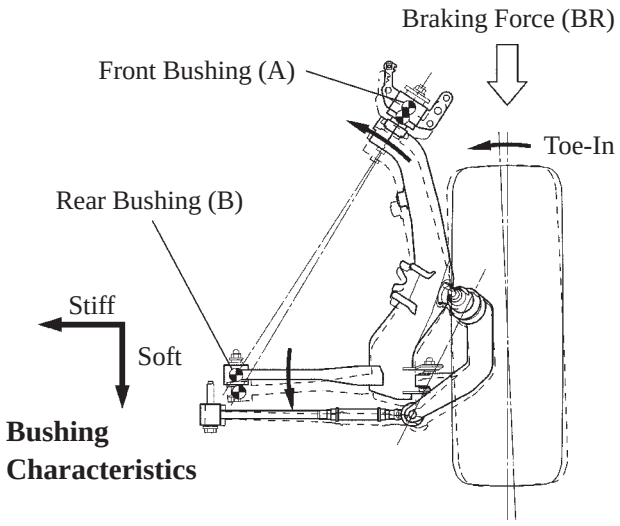

240CH50

■AXLE

1. Front Axle

- The front axle use a double-row angular ball bearing which offers low rolling resistance.
- A lock nut has been adopted and staked for tightening the axle hub in order to ensure the tightening performance. This nut cannot reused.

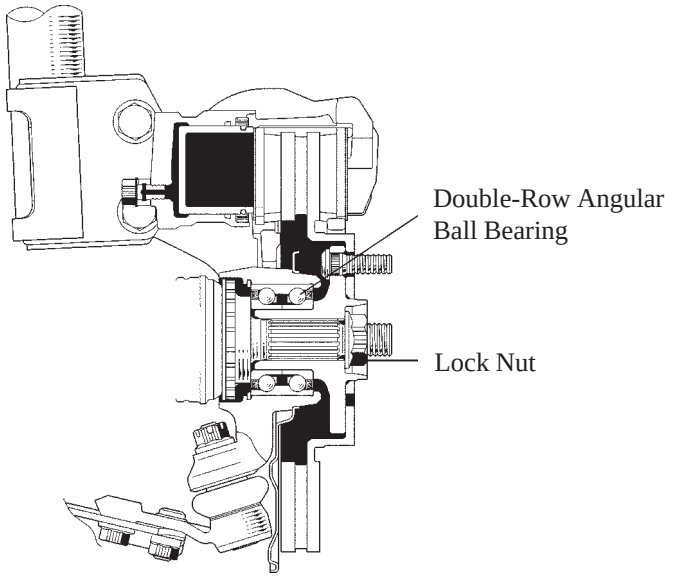

240CH52

2. Rear Axle

- The rear axle use a double-row angular ball bearing which offers low rolling resistance.
- Part of the inner race is integrated with the shaft, optimizing rigidity.

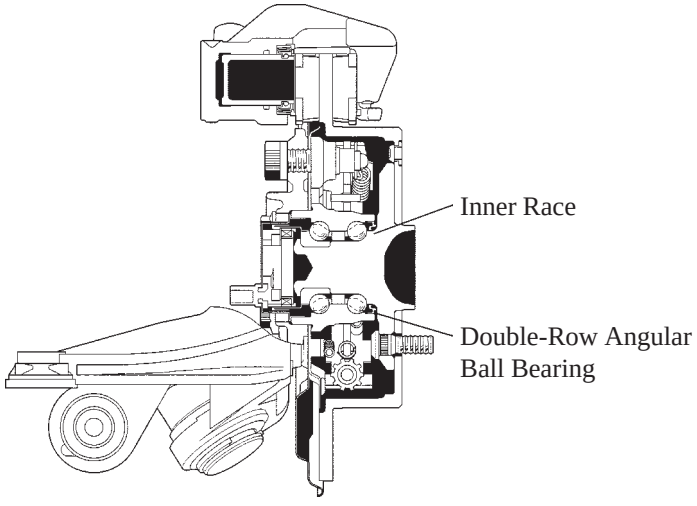

240CH53

DRIVE SHAFT

■ DESCRIPTION

- The new Avensis has a drive shaft with the following equipment:

Engine	Transaxle	Joint Type		Dynamic Damper	
		Diff. Side	Wheel Side	RH	LH
1ZZ-FE	C250 MT	Tripod Type CVJ	Rzeppa type CVJ	○	○
	U341E AT			○	○
3ZZ-FE	C50 MT			○	○
1AZ-FE and 1AZ-FSE	E354 MT			○	—
	U241E AT			○	○
1CD-FTV	E357 MT			○	—

▶ 1ZZ-FE and 3ZZ-FE Engines ◀

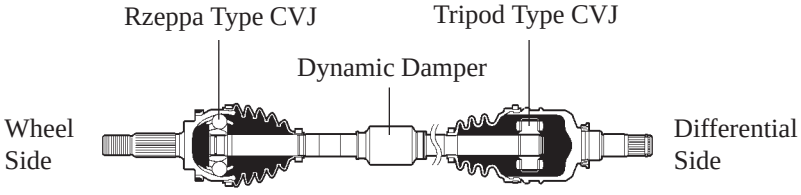

Left-Hand

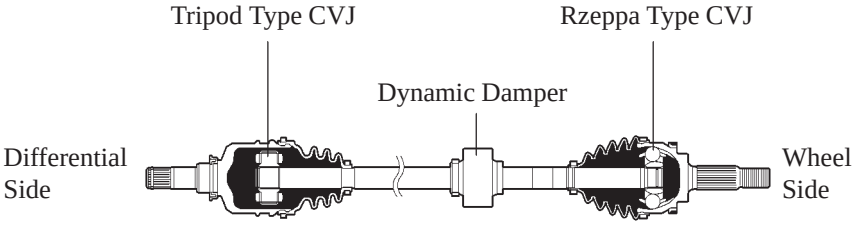

Right-Hand

240CH14

▶ 1AZ-FE and 1AZ-FSE Engine with Manual Transaxle and 1CD-FTV Engine ◀

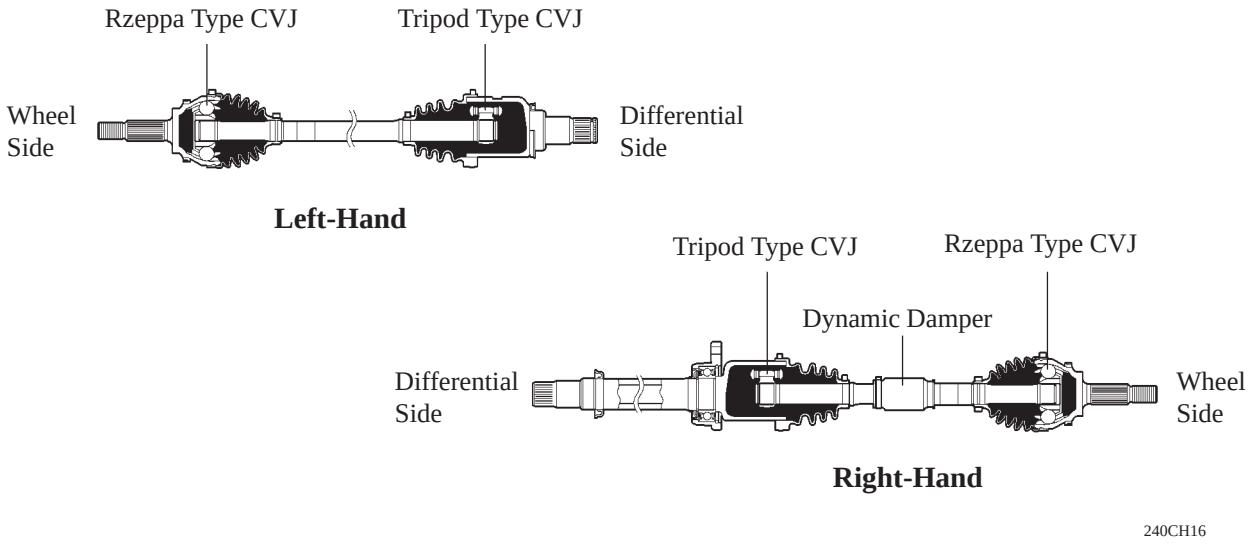

240CH16

▶ 1AZ-FE and 1AZ-FSE Engine with Automatic Transaxle ◀

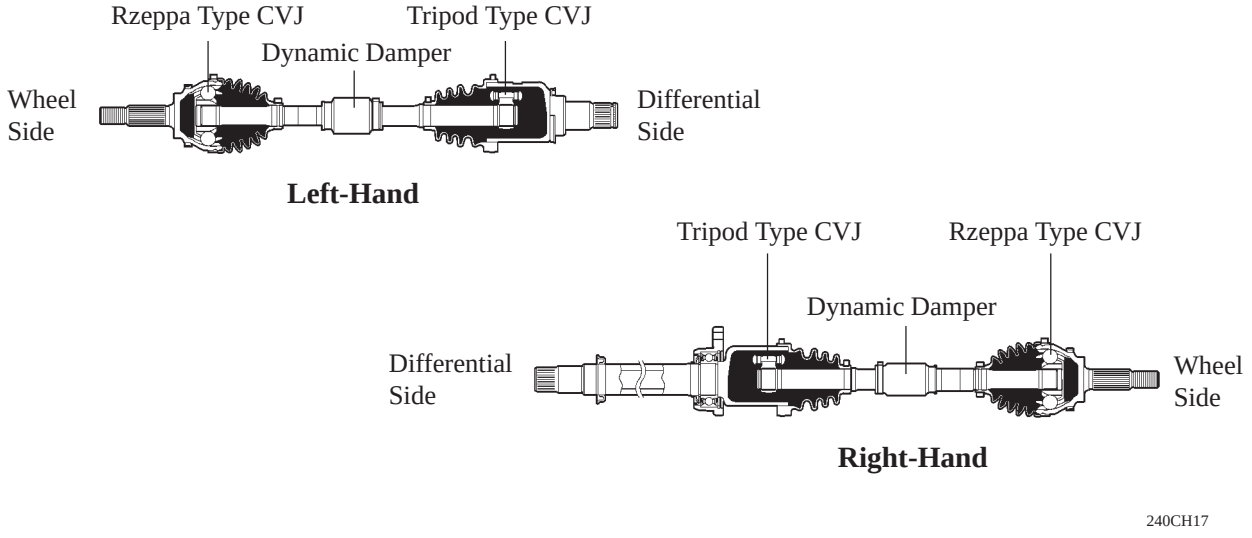

240CH17

BRAKE

■ DESCRIPTION

1. General

- The master cylinder, front brake calipers, rear brake calipers, parking brake and brake actuator are used BOSCH made.
- The Avensis has a brake system with the following specifications:

▶ Specification ◀

Models for Europe

Models		New					Previous
Engine		3ZZ-FE	1ZZ-FE	1AZ-FE	1AZ-FSE	1CD-FTV	All
Front	Type	Ventilated Disc					←
	Rotor Size	For 15 in. wheel			For 16 in. wheel		For 15 in. wheel
Rear	Type	Solid Disc					LT Drum*1 Solid Disc*2
	Rotor/Drum Size	For 15 in. wheel					←
ABS with EBD		STD			—	STD	←
ABS with EBD, Brake Assist, TRC, VSC		—			STD	OPT	STD*3 OPT*4
Brake Control Valve		EBD					←
Parking Brake type		Lever Type					←

*1: Without VSC *2: With VSC and option *3: LINEA SOL grade of the 1AZ-FSE engine
*4: LINEA TERRA grade

Models for General Countries

Model		New	Previous
Engine		1AZ-FE	All
Front	Type	Ventilated Disc	←
	Rotor Size	For 15 in. wheel	For 14 in. wheel
Rear	Type	Solid Disc	LT Drum
	Rotor/Drum Size	For 15 in. wheel	For 14 in. wheel
ABS with EBD		STD	OPT
ABS with EBD, Brake Assist, TRC, VSC		—	—
Brake Control Valve		EBD	←
Parking Brake type		Lever Type	←

▶ Specification ◀

Models		New	Previous
Master Cylinder	Type	Tandem (Portless + Portless) (BOSCH Made)	Tandem (Portless + Lockheed)
	Diameter mm (in.)	23.81 (0.94)	
Front Brake	Caliper Type	15” ZOH57-26V*1 16” ZOH57-26V*2 (BOSCH Made)	(AISIN Made)
	Pad Area cm^2 ($in.^2$)		36.9 (1.45) 43 (1.69)
	Wheel Cylinder Dia. mm (in.)	57 (2.24)	57 (2.24)
	Rotor Size (D x T) mm (in.)	277 x 26 (10.89 x 1.02) *1 295 x 26 (11.59 x 1.02) *2	260 x 25 (10.24 x 0.98) *3 276 x 25 (10.87 x 0.98) *4
	Pad Material	Pagid 660	PC 553 H
Rear Brake	Caliper Type	15” ZOH38-10S (BOSCH Made)	
	Pad Area cm^2 ($in.^2$)		
	Wheel Cylinder Dia mm (in.)	38 (1.49)	
	Rotor Size (D x T) mm (in.)	280 x 10 (11.00 x 0.39)	271 x 10 (10.67 x 0.39)
	Drum Inner Dia. mm (in.)	—	228 (8.98)
	Pad or Lining Material	Textar T4148	
Brake Control Valve		EBD	
Parking Brake	Rotor Size (D x T) mm (in.)	—	271 x 10 (10.67 x 0.39)*5
	Drum Inner Dia. mm (in.)	173 (6.8)	228 (8.98)*6
Brake Actuator	ABS with EBD	ABS (BOSCH Made)	ABS (BOSCH Made)
	ABS with EBD, Brake Assist, TRC, VSC	VSC (BOSCH Made)	←

*1: Except for 1AZ-FSE or 1CD-FTV engine models *2: 1AZ-FSE and 1CD-FTV engine models
*3: Except for 3S-FE and LINEA SOL grade of 1AZ-FSE engine of the Europe models, General Countries models *4: 3S-FE and LINEA SOL grade of 1AZ-FSE engine models are only for Europe *5: Without VSC *6: With VSC and option

CH

2. Component of Brake System

▶ Brake Actuator ◀

● Skid Control ECU

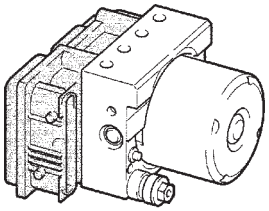

Formodels with ABS with EBD

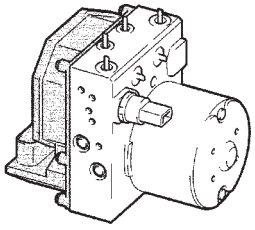

For Models with ABS with EBD, Brake Assist, TRC, VSC

▶ Master Cylinder & Booster ◀

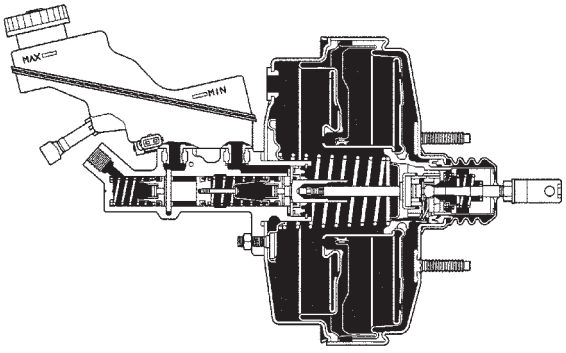

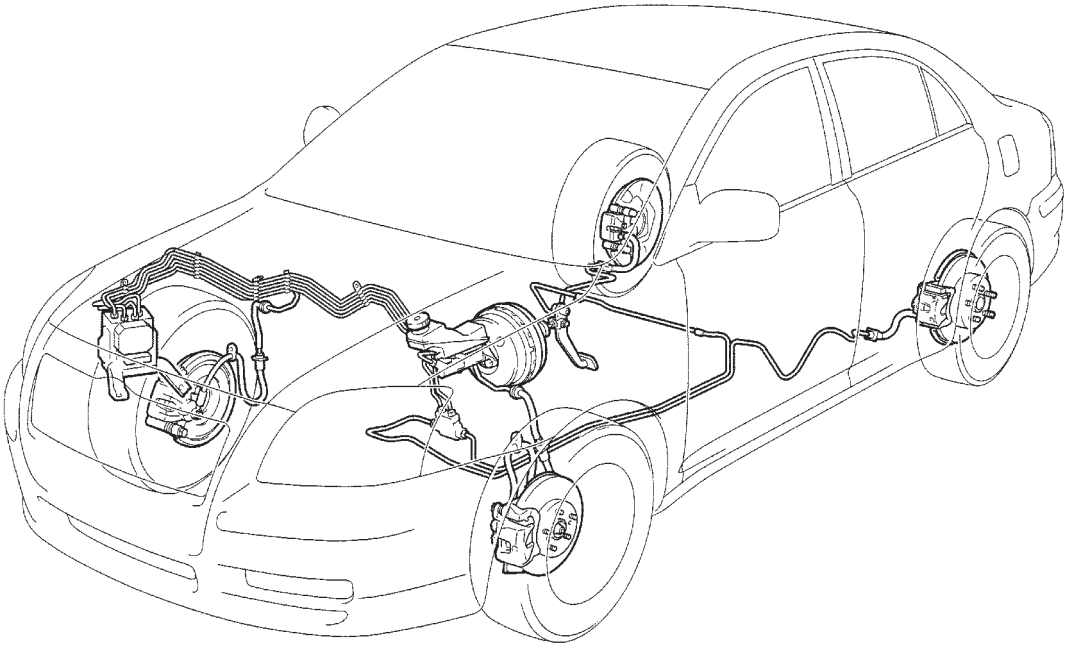

▶ Front Brake ◀

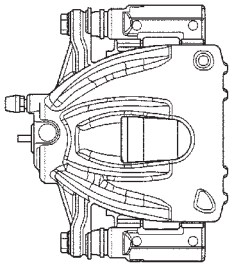

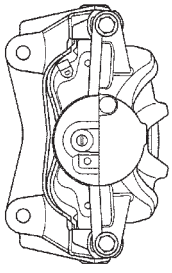

▶ Rear Brake ◀

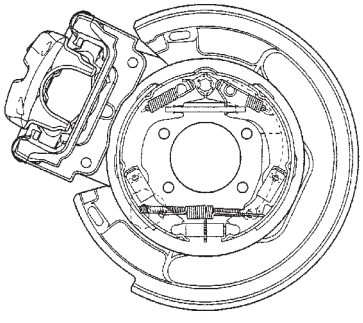

240CH54

■ MAJOR DIFFERENCE (from Previous Model)

Component Parts		Changed
Master Cylinder		● Changed from Portless + Lockheed type to Portless + Portless type. ● Piston stroke changed from 36 mm (1.42 in.) to 37.5 mm (1.48 in.).
Brake Booster		● Booster size changed from 9” or 7 + 8” to 8 + 9”.
Front Brake		● Caliper maker changed to BOSCH; size increased. ● Disc rotor changed from 14” or 15” to 15” or 16”. ● Braking effective radius changed from 107 mm (4.21 in.) or 112 mm (4.41 in.) to 113.4 mm (4.46 in.) or 123.7 mm (4.47 in.).
Rear Brake		● Drum brakes discontinued; all models use the BOSCH made disc brakes. ● Disc rotor size changed; braking effective radius changed from 117 mm to 122.6 mm.
Brake Control System	ABS with EBD	● Brake actuator made smaller and lighter.
	ABS with EBD, Brake Assist, TRC, VSC	● 1CD-FTV engine newly available. ● DTC added. (Code No. :45/C1201)

■BRAKE CONTROL SYSTEM (ABS with EBD)

1. General

The brake control system (ABS with EBD) of new Avensis has a following function.

Function	Outline
ABS (Anti-lock Brake System)	The ABS helps prevent the wheels from locking when the brakes are applied firmly or when braking on a slippery surface.
EBD (Electronic Brake force Distribution)	The EBD control utilizes ABS, realizing the proper brake force distribution between front and rear wheels in accordance with the driving conditions. In addition, during cornering braking, it also controls the brake forces of right and left wheels, helping to maintain the vehicle behavior.

Service Tip

When brake control system is activated, the brake pedal could shudder, which is a normal occurrence of the system in operation and should not be considered a malfunction.

▶ System Diagram ◀

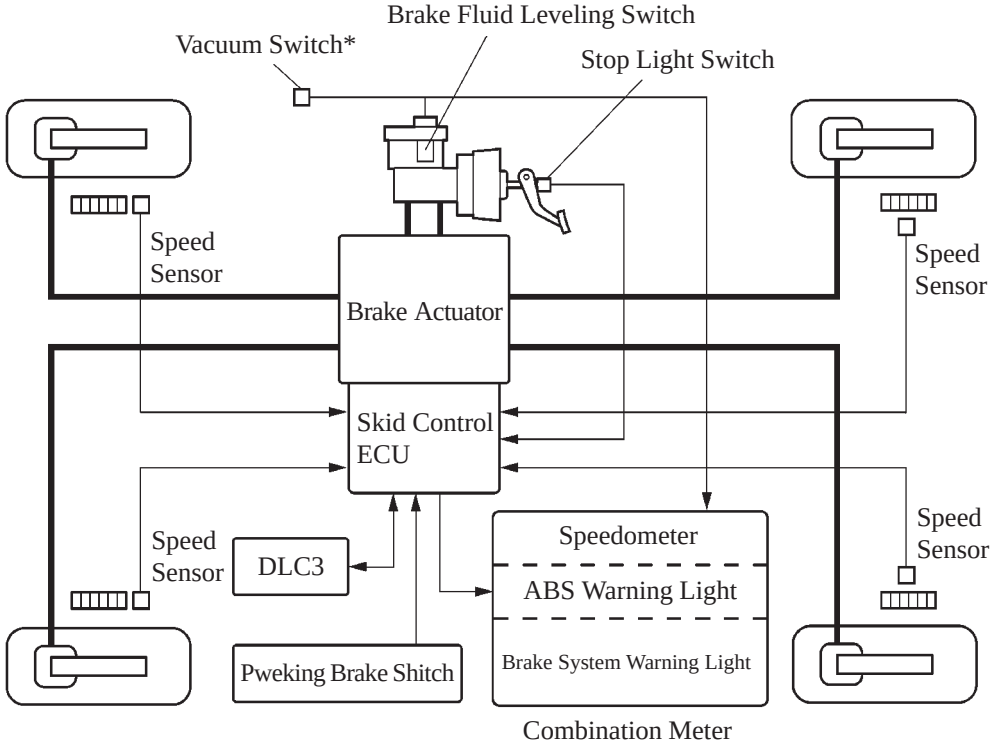

*: Only for lCD-FTV Engine

240CH89

2. Outline of EBD Control

General

The distribution of the brake force, which was performed mechanically in the past, is now performed under electrical control of the skid control ECU, which precisely controls the braking force in accordance with the vehicle's driving conditions.

Front/Rear Wheels Brake Force Distribution

If the brakes are applied while the vehicle is moving straight forward, the transfer of the road reduces the load that is applied to the rear wheels. The skid control ECU determines this condition by way of the signals from the speed sensor, and the brake actuator regulates the distribution of the brake force of the rear wheels to optimally control.
For example, the amount of the brake force that is applied to the rear wheels during braking varies whether or not the vehicle is carrying a load. The amount of the brake force that is applied to the rear wheels also varies in accordance with the extent of the deceleration.
Thus, the distribution of the brake force to the rear is optimally controlled in order to effectively utilize the braking force of the rear wheels under these conditions.

▶ EBD Control Concept ◀

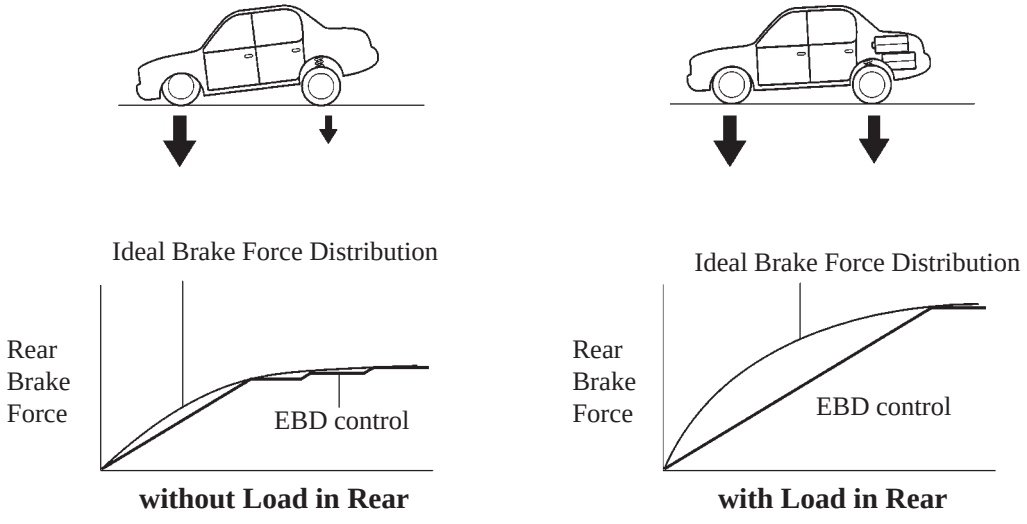

182CH56

Right/Left Wheels Brake Force Distribution (During Cornering Braking)

When the brakes are applied while the vehicle is cornering, the load that applied to the inner wheel decreases to the outer wheel increases.
The skid control ECU determines this condition by way of the signals from the speed sensor, and the brake actuator regulates the brake force in order to optimally control the distribution of the brake force to the inner wheel and outer wheel.

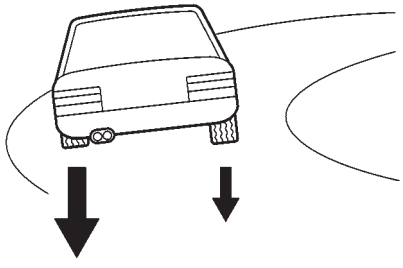

181CH56

3. Layout of Main Component

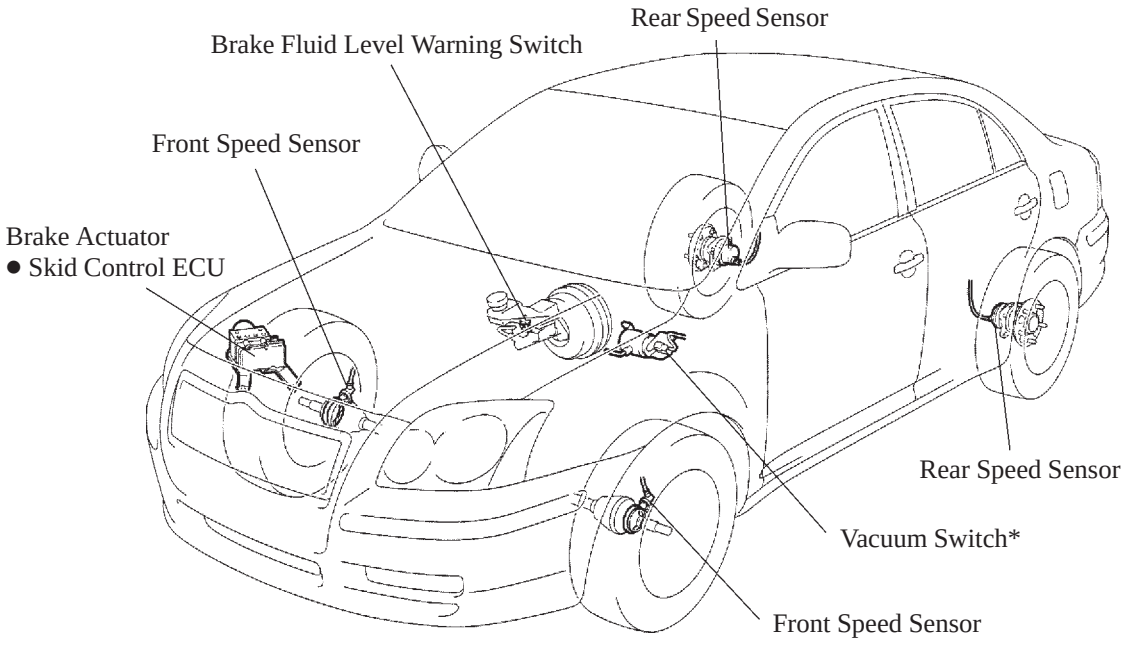

240CH55

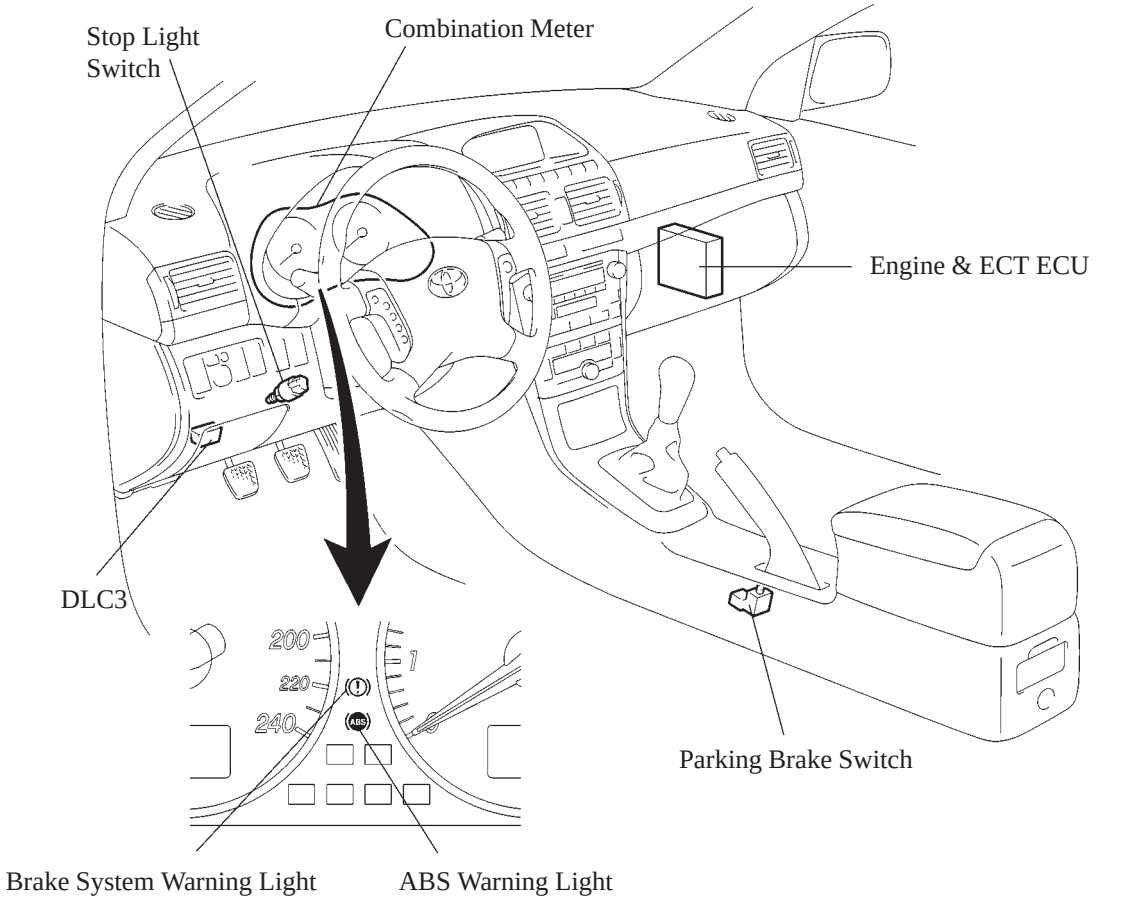

240CH56

*: Only for 1CD-FTV Engine

4. Function of Main Component

Component		Function
Combination Meter	Brake System Warning Light	● Lights up to alert the driver when a malfunction occurs in the EBD or skid control ECU. ● Blinks to alert the driver that the vacuum pressure of the brake booster has decreased. (only for 1CD-FTV Engine)
	ABS Warning Light	Lights up to alert the driver when the skid control ECU detects a malfunction in the ABS or EBD.
Brake Fluid Level Warning Switch		Detects the brake fluid level.
Stop Light Switch		Detects the brake pedal depressing signals.
Speed Sensor (4)		Detects the wheel speed of each of 4 wheels.
Vacuum Switch*		Detects the vacuum pressure of the brake booster.
Brake Actuator	Actuator Portion	Charges of fluid path based on the signals from the skid control ECU during the operation of the ABS with EBD, in order to control the fluid pressure that is applied to the wheel cylinders.
	Skid Control ECU	Judges the vehicle driving condition based on the signals from each sensor, and sends brake control signals to the brake actuator.

*: Only for 1CD-FTV Engine

6. Brake Actuator

General

The brake actuator consists of actuator portion and skid control ECU.

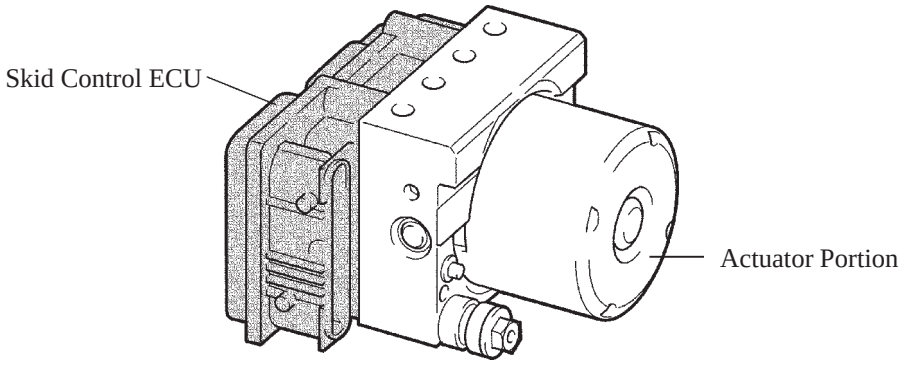

240CH57

Actuator Portion

The actuator portion consists of 8 two-position solenoid valves 1 motor, 2 pumps and 2 reservoirs. The 8 two-solenoid valves consists of 4 pressure holding valves [(1), (2), (3), (4)] and 4 pressure reduction valves [(5), (6), (7), (8)].

▶ Hydraulic Circuit ◀

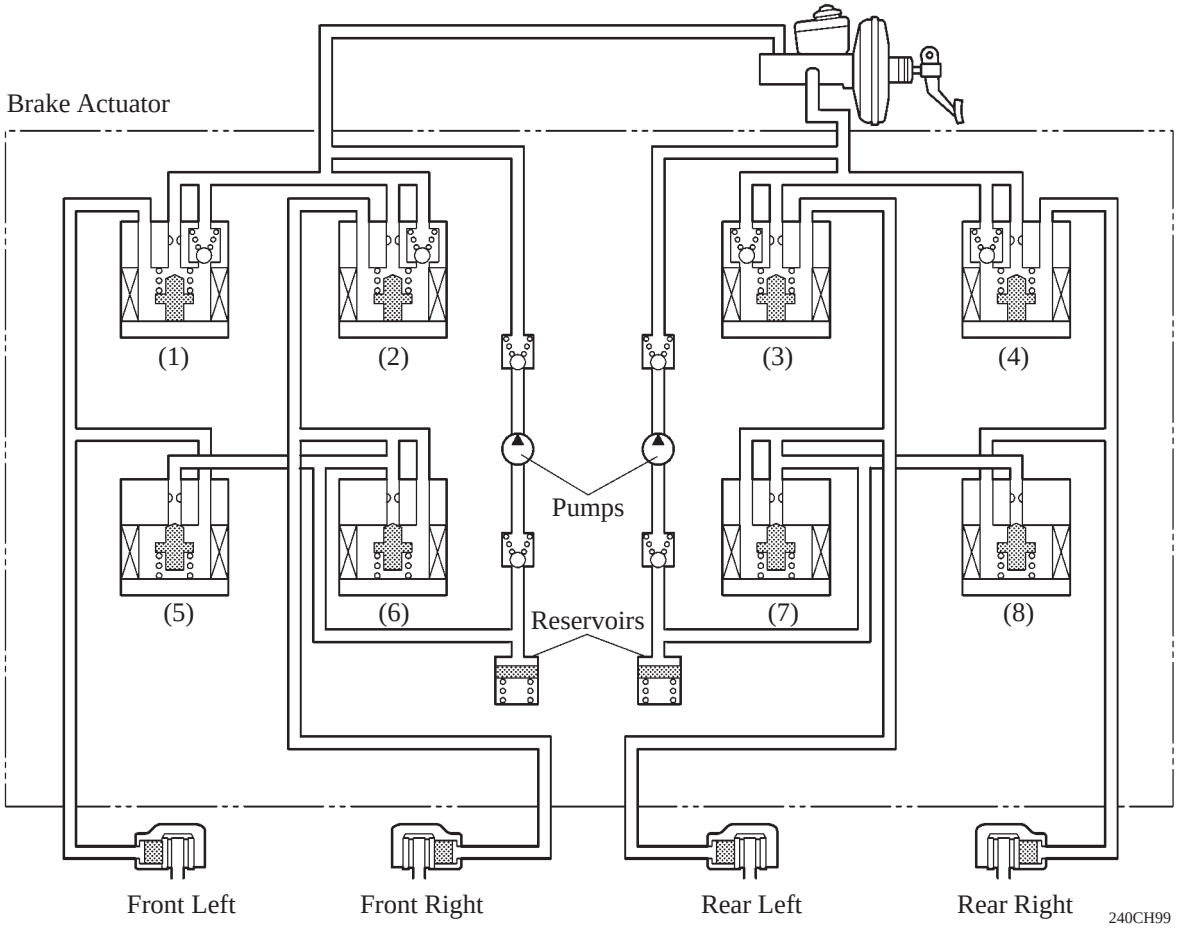

240CH99

5. System Operation

ABS with EBD Operation

Based on the signals received from the 4wheel speed sensors, the skid control ECU calculates each wheel speed and deceleration, and checks wheel slipping conditions. And according to the slipping condition, the skid control ECU controls the pressure holding valve and pressure reduction valve in order to adjust the fluid pressure of the each wheel cylinder in the following 3 modes: pressure reduction, pressure holding, pressure increase modes.

Not Activated	Normal Braking	—	—
Activated	Increase Mode	Holding Mode	Reduction Mode
Hydraulic Circuit	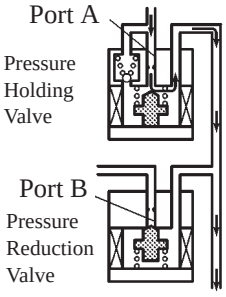 169CH54	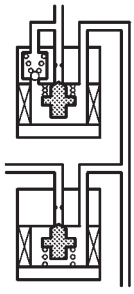 169CH55	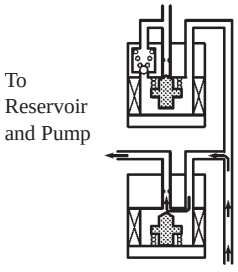 169CH56
Pressure Holding Valve (Port A)	OFF (Open)	ON (Close)	←
Pressure Reduction Valve (Port B)	OFF (Close)	←	ON (Open)
Wheel Cylinder Pressure	Increase	Hold	Reduction

CH

Self-Diagnosis

- If the skid control ECU detects a malfunction in the ABS with EBD system, the ABS and brake system warning lights that corresponds to the function in which the malfunction has been detected indicates or lights up, indicated in the table below, to alert the driver of the malfunction.

○: Light ON —: Light OFF

Item	ABS	EBD	Skid Control ECU
ABS Warning Light	○	○	○
Brake System Warning Light	—	○	○

- At the same time, the DTCs (Diagnostic Trouble Codes) are stored in memory. The DTCs can be read by connecting the SST (09843-18040) between the Tc and CG terminals of DLC3 and observing the blinks of the ABS warning light, or by connecting a hand-held tester.
- This system has a sensor signal check (test mode) function. This function is activated by connecting the SST (09843-18040) the between Ts and CG terminals of the DLC3 or by connecting a hand-held tester.
- If the skid control ECU detects a malfunction during a sensor check, it stores the DTCs in its memory. These DTCs can be read during a sensor check operation by connecting the Tc and CG terminals of the DLC3 and observing the blinking of the ABS warning light or on a hand-held tester.

For details, on the DTCs that are stored in skid control ECU memory and the DTCs that are output through the sensor signal check (test mode) functions, see the Avensis Repair Manual (Pub. No. RM1018E).

▶ DTC Chart (blinking ABS Warning Light) ◀

DTC No.		Detection Item	DTC No.		Detection Item
2-digit	5-digit		2-digit	5-digit	
11	C0278	Open or short circuit in ABS solenoid relay circuit	35	C1330	Open circuit in the right front speed sensor
13	C0273	Open or short circuit in ABS motor relay circuit	36	C1331	Open circuit in the left front speed sensor
21	C0226	Open or short circuit in 2-position solenoid circuit for right front wheel	37	C1237	Speed sensor rotor is wrong number of teeth on one of the 4 wheels
22	C0236	Open or short circuit in 2-position solenoid circuit for left front wheel	38	C1332	Open circuit in the right rear speed sensor
23	C0246	Open or short circuit in 2-position solenoid circuit for right rear wheel	39	C1333	Open circuit in the left rear speed sensor
24	C0256	Open or short circuit in 2-position solenoid circuit for left rear wheel	41	C1241	Low battery voltage or abnormally high battery voltage
31	C0200	Right front wheel speed sensor signal malfunction	51	C1350	Pump motor is locked or open circuit in pump motor ground
32	C0205	Left front wheel speed sensor signal malfunction	58	C1249	Open circuit in stop light switch circuit
33	C0210	Right rear wheel speed sensor signal malfunction	62	C1300	Malfunction in skid control ECU
34	C0215	Left rear wheel speed sensor signal malfunction	—	—	—

▶ DTC Chart of sensor check (blinking ABS warning light) ◀

DTC No.		Detection Item	DTC No.		Detection Item
2-digit	5-digit		2-digit	5-digit	
71	C1271	Low output voltage of right front speed sensor	75	C1275	Abnormal change in output voltage of right front speed sensor
72	C1272	Low output voltage of left front speed sensor	76	C1276	Abnormal change in output voltage of left front speed sensor
73	C1273	Low output voltage of right rear speed sensor	77	C1277	Abnormal change in output voltage of right rear speed sensor
74	C1274	Low output voltage of left rear speed sensor	78	C1278	Abnormal change in output voltage of left rear speed sensor

Fail-Safe

- In the event of a malfunction in the ABS, the skid control ECU prohibits the ABS operation.
- In the event of a malfunction in EBD control, skid control ECU prohibits the EBD control. Thus, the brake will be operated in the same condition as in the condition without the ABS with EBD.

■BRAKE CONTROL SYSTEM (ABS with EBD, BRAKE ASSIST, TRC, and VSC)

1. General

The brake control system (ABS with EBD, Brake Assist, TRC and VSC) of new Avensis has a following function:

Function	Outline
ABS (Anti-lock Brake System)	The ABS helps prevent the wheels from locking when the brakes are applied firmly or when braking on a slippery surface.
EBD (Electronic Brake force Distribution)	The EBD control utilizes ABS, realizing the proper brake force distribution between front and rear wheels in accordance with the driving conditions. In addition, during cornering braking, it also controls the brake forces of right and left wheels, helping to maintain the vehicle behavior.
Brake Assist	The primary purpose of the Brake Assist system is to provide an auxiliary brake force to assist the driver who cannot generate a large brake force during emergency braking, thus helping draw the vehicle's brake performance.
TRC (Traction Control)	The TRC system helps prevent the drive wheels from slipping if the driver presses the accelerator pedal excessively when starting off or accelerating on a slippery surface.
VSC (Vehicle Stability Control)	The VSC system helps prevent the vehicle from slipping sideways as a result of strong front wheel skid or strong rear wheel skid during cornering.

Service Tip

When brake control system is activated, the brake pedal could shudder, which is a normal occurrence of the system in operation and should not be considered a malfunction.

▶ System Diagram ◀

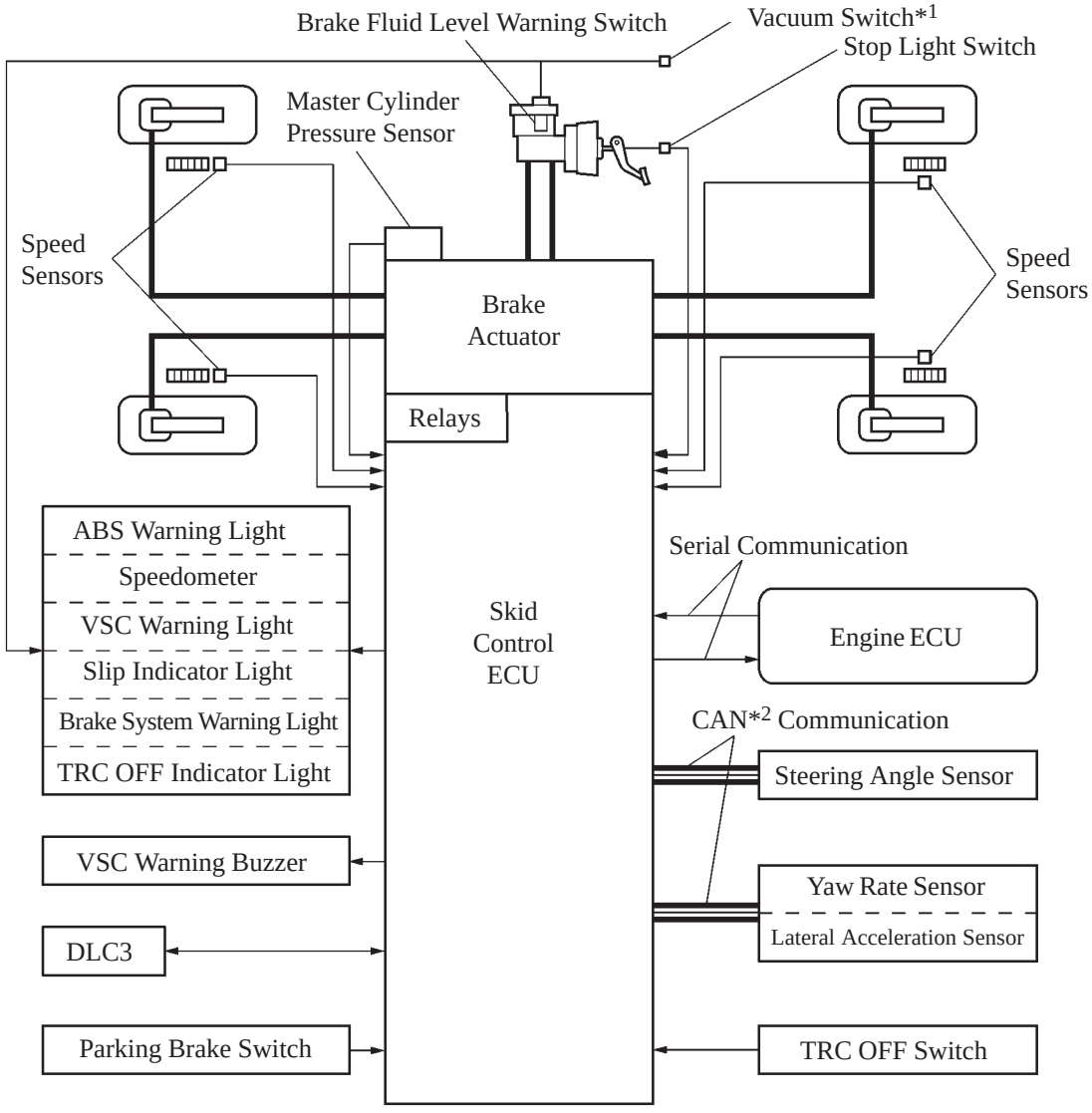

*1: For 1CD-FTV Engine
*2: CAN (Controller Area Network)

240CH90

CH

2. Outline of EBD Control

The detailed outline is the same as that of the brake control system (ABS with EBD). See page CH-75.

3. Outline of Brake Assist System

- The Brake Assist system in combination with ABS helping ensure the vehicle's brake performance.
- The Brake Assist system interprets a quick push of the brake pedal as emergency braking and supplements the braking power applied if the driver has not stepped hard enough on the brake pedal. In based on the signals from the master cylinder pressure sensor, the skid control ECU calculates the speed and the amount of the brake pedal application and then determines the intention of the driver to make an emergency braking. If the skid control ECU determines that the driver intends the emergency braking, the system activates the brake actuator to increase the brake fluid pressure, which increases the braking force.

▶ In case that the driver's depressing force is small when applying emergency braking ◀

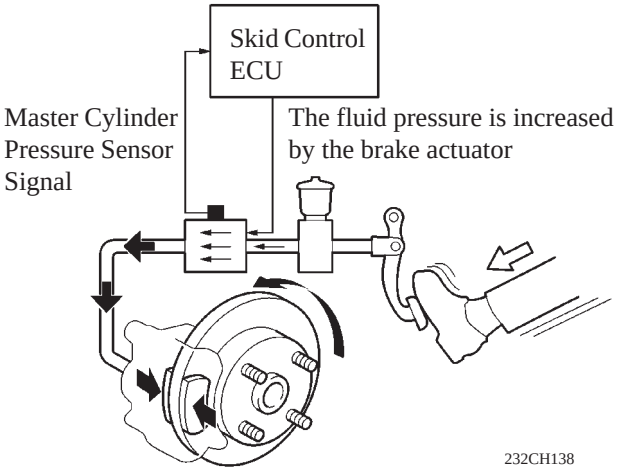

with Brake Assist System

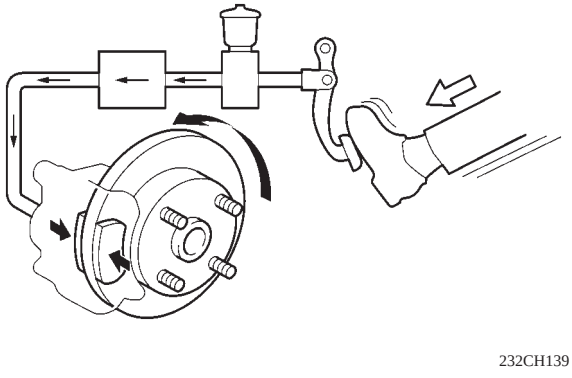

without Brake Assist System*

*: The basic performance of the brake is the same as of the model with the brake assist system.

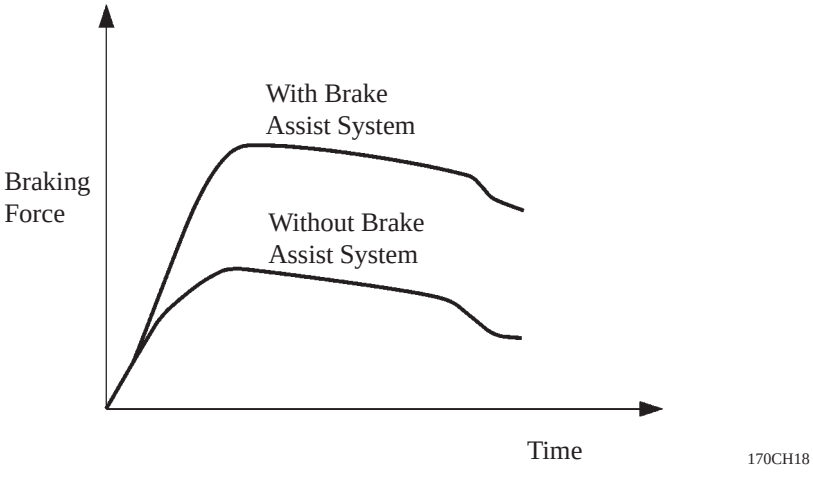

4. Outline of TRC System

- If the driver press the accelerator pedal aggressively when starting off or accelerating on a slippery surface, the drive wheel could slip due to the excessive amount of torque that is generated. By applying hydraulic brake control to the drive wheels and regulating to control the engine output, the TRC system helps minimize the slippage of the drive wheels, thus generating the drive force that is appropriate for the road surface conditions.
- For example, a comparison may be made between two vehicles, one with the TRC system and other without. If the driver of each vehicle operates the accelerator pedal in a rough manner while driving over a surface with different surface friction characteristics, the drive wheel on the slippery surface could slip as illustrated. As a result, the vehicle could become unstable.
  However, when the vehicle is equipped with the TRC system, the skid control ECU instantly determines the state of the vehicle and operates the brake actuator in order to apply the slipping drive wheel. Furthermore, the Engine ECU receives the signals from the skid control ECU and regulates in order to control the engine output. Thus, the system can constantly maintain a stable vehicle posture.

▶ Driving condition on road with different surface friction characteristics ◀

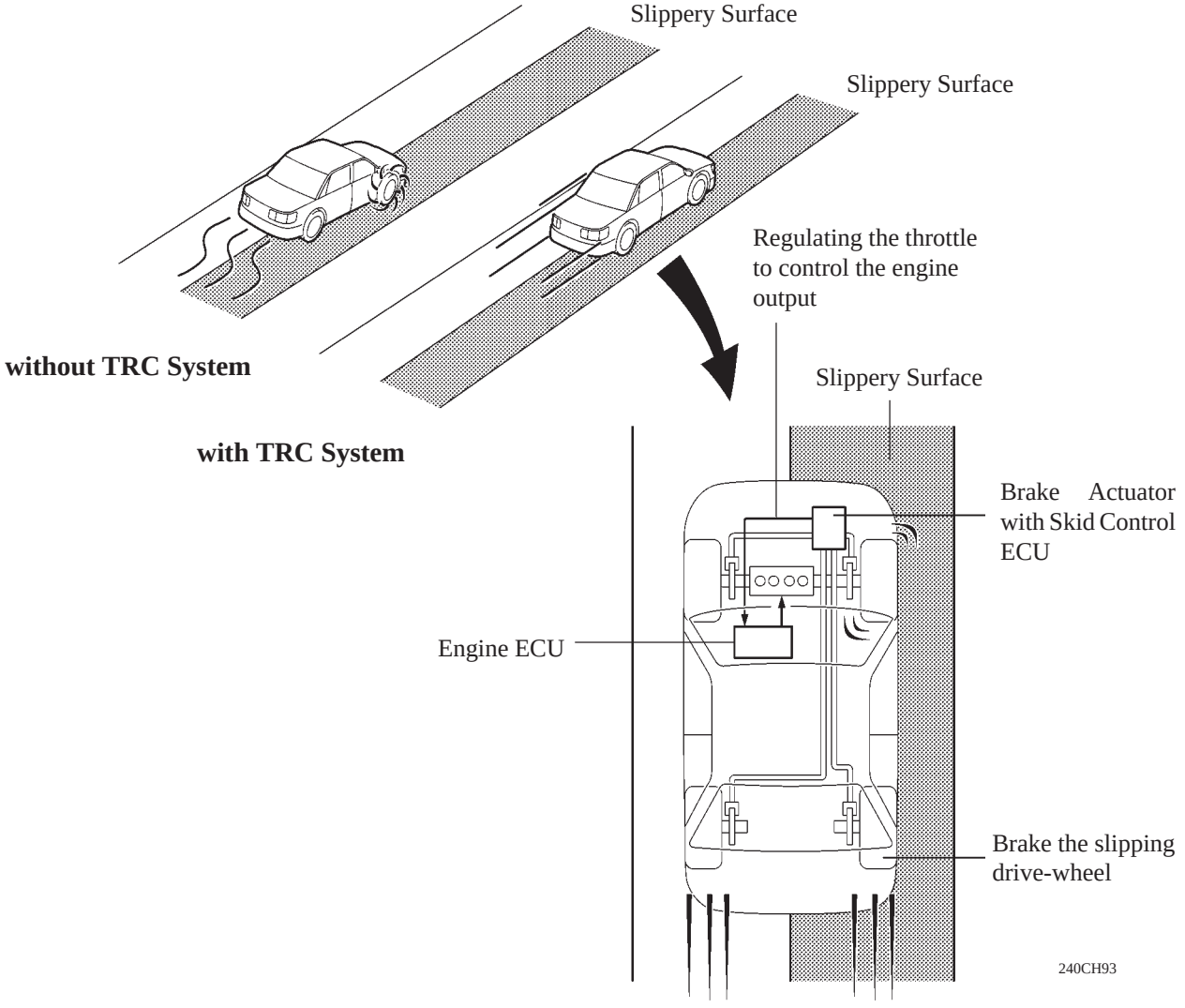

5. Outline of VSC System

General

The followings are two examples that can be considered as circumstances in which the tires exceed their lateral grip limit.
The VSC system is designed to help control the vehicle behavior by controlling the engine output and the brakes at each wheel when the vehicle is under one of the conditions indicated below.

- When the front wheels lose grip in relation to the rear wheels (front wheel skid tendency).
- When the rear wheels lose grip in relation to the front wheels (rear wheel skid tendency).

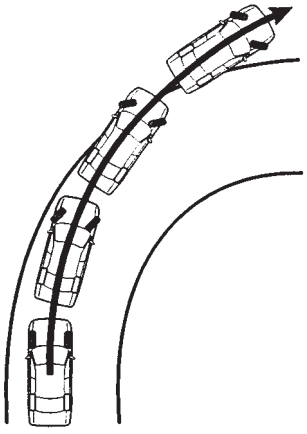

151CH17

Front Wheel Skid Tendency

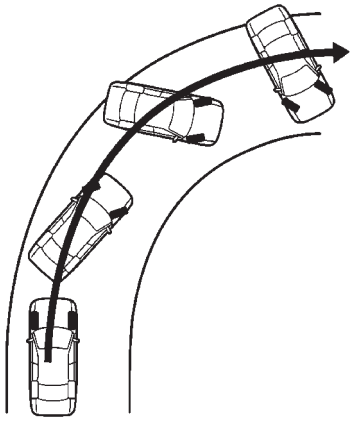

189CH100

Rear Wheel Skid Tendency

Method for Determining the Vehicle Condition

To determine the condition of the vehicle, sensors detect the steering angle, vehicle speed, vehicle's yaw rate, and the vehicle's lateral acceleration, which are then calculated by the skid control ECU.

1) Determining Front Wheel Skid

Whether or not the vehicle is in the state of front wheel skid is determined by the difference between the target yaw rate and the vehicle's actual yaw rate.
When the vehicle's actual yaw rate is smaller than the yaw rate (a target yaw rate that is determined by the vehicle speed and steering angle) that should be rightfully generated when the driver operates the steering wheel, it means the vehicle is making a turn at a greater angle than the locus of travel.
Thus, the skid control ECU determines that there is a large tendency to front wheel skid.

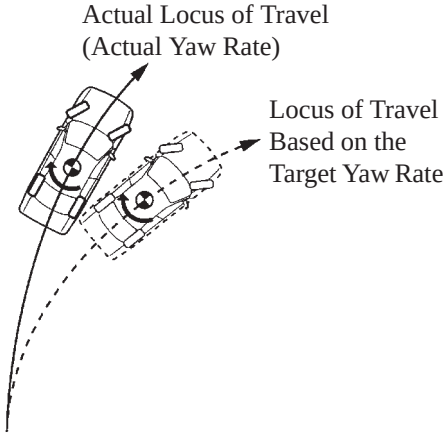

151CH19

2) Determining Rear Wheel Skid

Whether or not the vehicle is in the state of rear wheel skid is determined by the difference between the target yaw rate and the vehicle's actual yaw rate.
When the vehicle's actual yaw rate is larger than the yaw rate (a target yaw rate that is determined by the vehicle speed and steering angle) that should be rightfully generated when the driver operates the steering wheel, the skid control ECU determines that the vehicle has a large rear wheel skid tendency.

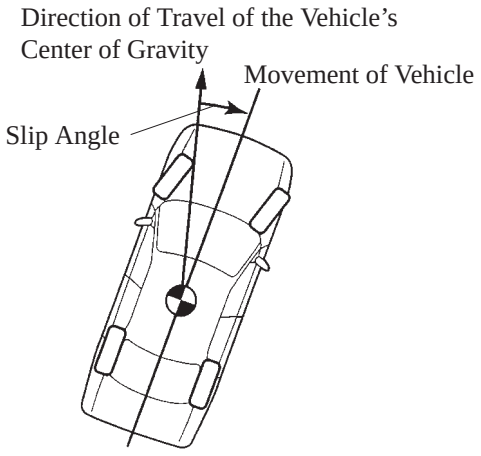

151CH18

Method for VSC Operation

When the skid control ECU determines that the vehicle exhibits a tendency to front wheel skid or rear wheel skid, it decreases the engine output and applies the brake of a front or rear wheel to control the vehicle's yaw moment.
The basic operation of the VSC is described below. However, the control method differs depending on the vehicle's characteristics and driving conditions.

1) Dampening a Strong Front Wheel Skid

When the skid control ECU determines that there is a large front wheel skid tendency, it counteracts in accordance with the extent of that tendency. The skid control ECU controls the engine power output and applies the brakes of the front and rear wheels of the inner circle in the turn in order to restrain the front wheel skid tendency.

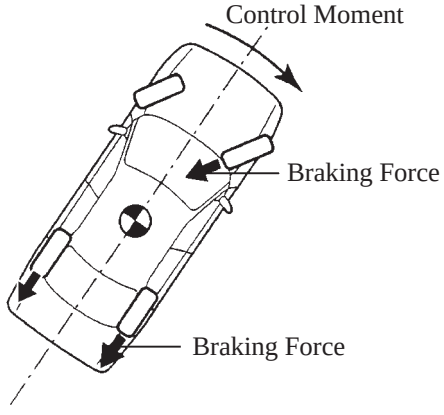

240CH95

Making a Right Turn

2) Dampening a Rear Wheel Skid

When the skid control ECU determines that there is a large rear wheel skid tendency, it counteracts in accordance with the extent of that tendency. It applies the brakes of the front and rear wheel of the outer circle of the turn, and generates an outward moment of inertia in the vehicle, in order to restrain the rear wheel skid tendency. Along with the reduction in the vehicle speed caused by the braking force, the vehicle's stability is further improved.

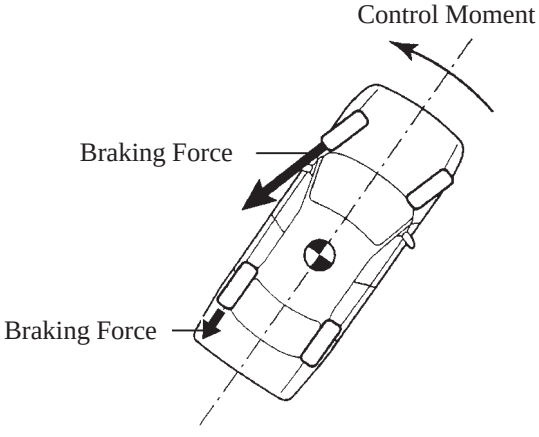

240CH96

Making a Right Turn

6. Layout of Component

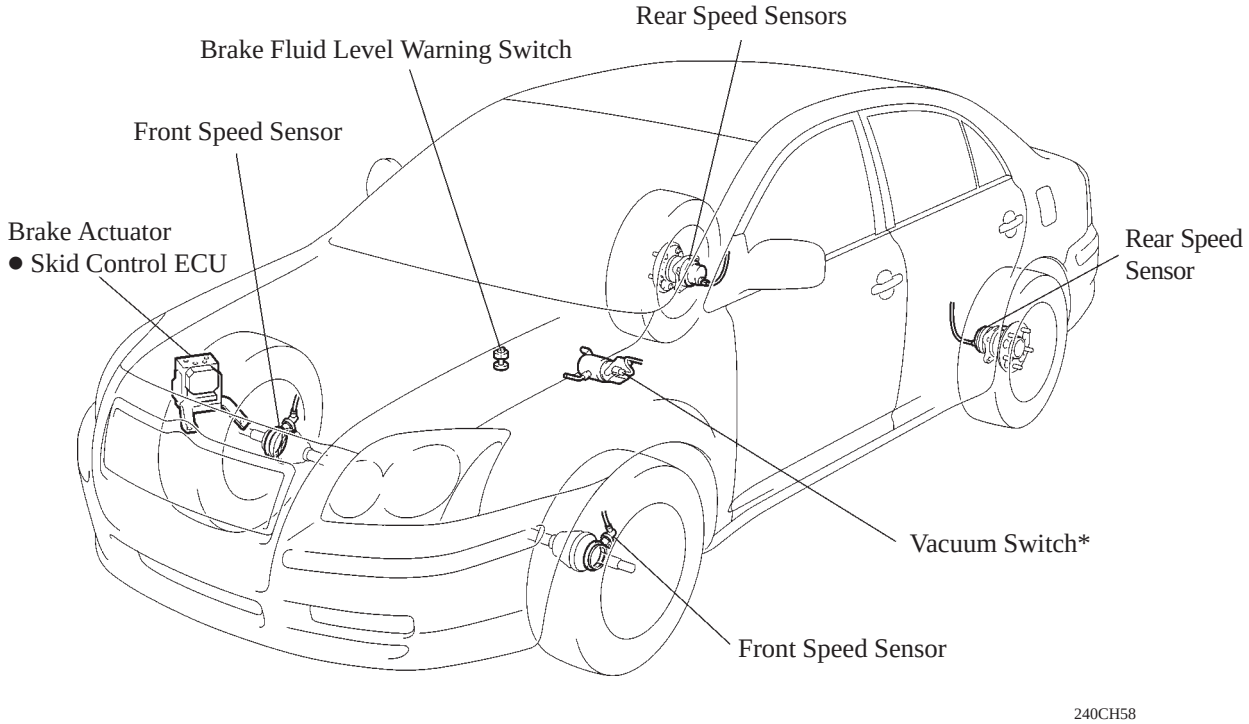

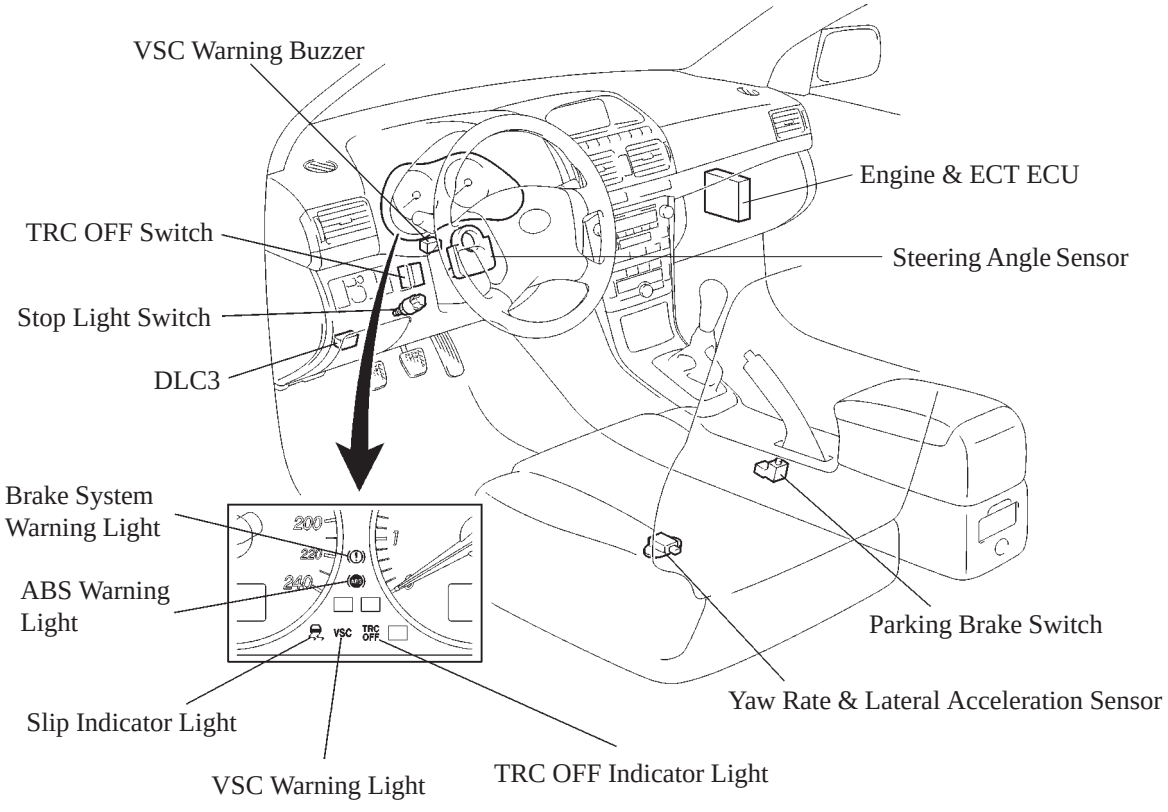

*: Only for 1CD-FTV engine model.

7. Function of Main Components

Component		Function
Combination Meter	ABS Warning Light	Lights up to alert the driver when the skid control ECU detects the malfunction in the ABS, EBD, or Brake Assist system.
	VSC Warning Light	Lights up to alert the driver when the skid control ECU detects the malfunction in the TRC or VSC system.
	Slip Indicator Light	Blinks to inform the driver when the TRC system or the VSC system is operated.
	TRC OFF Indicator Light	● Lights up to inform the driver when the TRC system is turned OFF by the TRC OFF switch. ● Lights up to inform the driver when the skid control ECU detects the malfunction in the TRC or VSC system.
	Brake System Warning Light	● Lights up together with the ABS warning light to alert the driver when the skid control ECU detects the malfunction in the EBD control. ● Lights up to inform the driver when vacuum is low*1.
Engine ECU		● Based on the signals receives from the skid control ECU, control the engine output. ● Also, sends the accelerator pedal position signal, and engine speed signal to the skid control ECU.
Speed Sensors		Detects the wheel speed of each four wheels.
Brake Actuator		Charges the fluid path based on the signals from the skid control ECU during the operation of the ABS with EBD & Brake Assist & TRC & VSC system, in order to control the fluid pressure that is applied to the wheel cylinders.
	Master Cylinder Pressure Sensor	Assembled in the brake actuator and detects the master cylinder pressure.
Skid Control ECU		Judges the vehicle driving condition based on signals from each sensor, and control the brake actuator.
Brake Fluid Level Warning Switch		Detects the brake fluid level.
Stop Light Switch		Detects the brake pedal-depressing signal.
TRC OFF Switch		Turn the TRC operation inoperative.
VSC Warning Buzzer		Emits an intermittent sound to inform the driver that the skid control ECU detects a strong front wheel skid tendency or strong rear wheel skid tendency.
Yaw Rate & Lateral Acceleration Sensor		● Detects the vehicle's yaw rate. ● Detects the vehicle's lateral acceleration.
Steering Angle Sensor		Detects the steering direction and angle of the steering wheel.

CH

8. Construction and Operation of Main Component

Yaw Rate Sensor

A lateral acceleration sensor is built into the yaw rate sensor.
This sensor detects the yaw rate and lateral acceleration, and sends this signal to the skid control ECU.

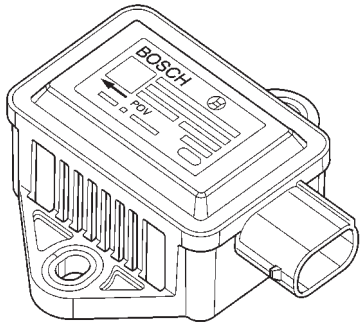

195CH24

Steering Angle Sensor

This steering angle sensor detects the steering direction and angle, and sends this signal to the skid control ECU.

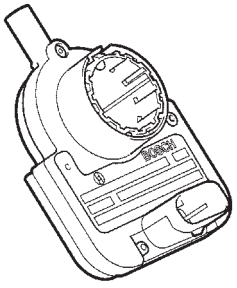

240CH84

Service Tip

After repairing or replacing the Avensis steering angle sensor or steering column assembly, be sure to calibrate the steering angle sensor. For the actual procedure, refer to the Avensis Repair Manual (Pub. No. RM1018E).
If this procedure is not executed correctly, DTC (Diagnostic Trouble Code) 88 (C1288) or 54 (C1208) may remain.

Master Cylinder Pressure Sensor

The master cylinder pressure sensor detects the hydraulic pressure that is generated in accordance with the pedal effort applied to the brake pedal and outputs the signals to the skid control ECU.

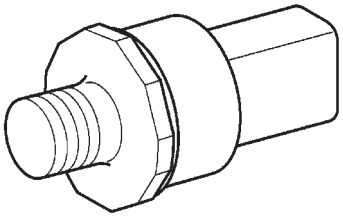

195CH09

Brake Actuator

1) General

The brake actuator consists of actuator portion and skid control ECU.
The brake actuator consists of 12 two-position valves, 1 motor, 2 pumps, and 2 reservoirs, and 1- master cylinder pressure sensor.

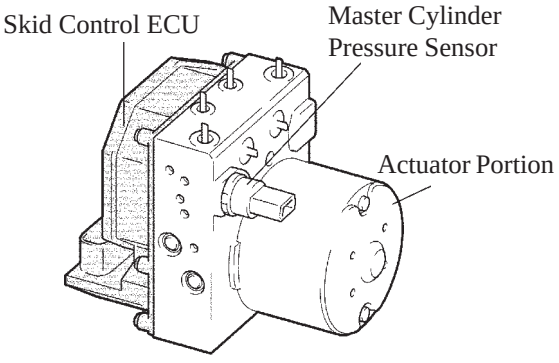

240CH60

▶ Hydraulic Circuit ◀

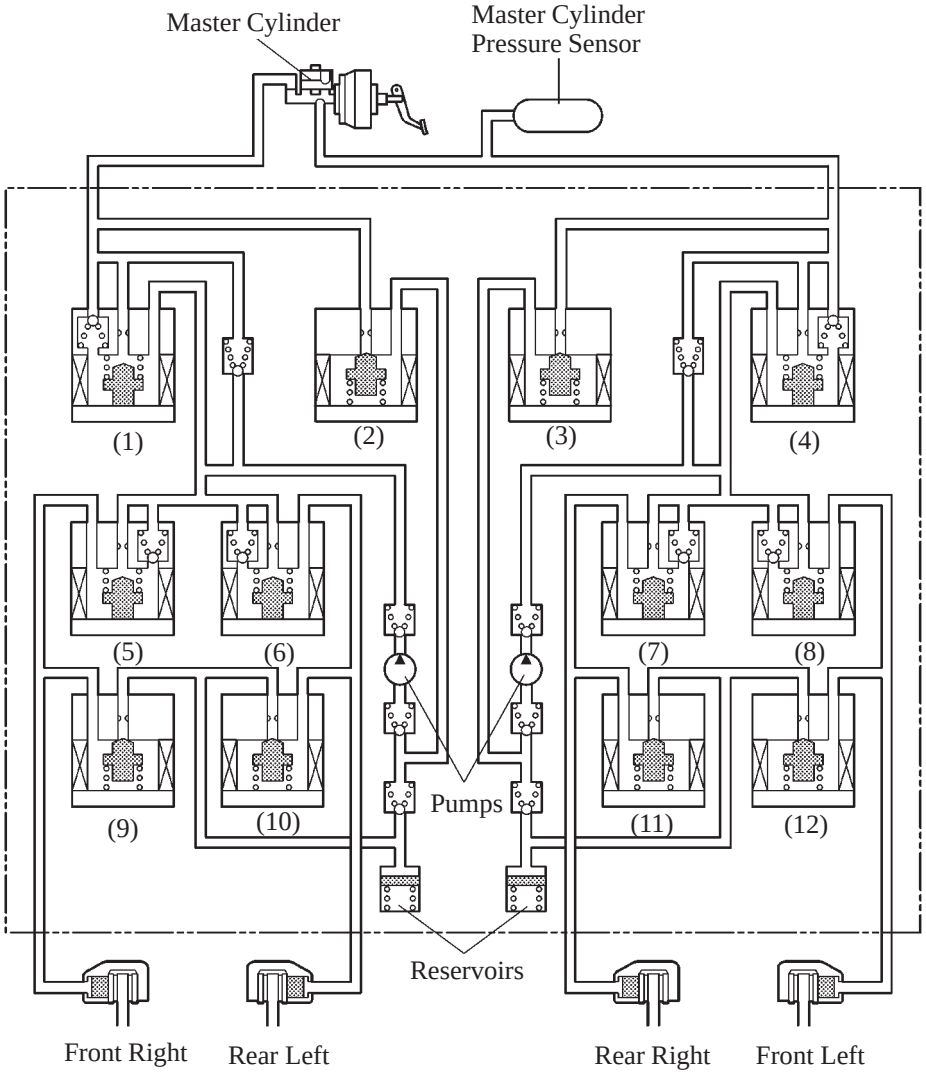

218CH30

Master Cylinder Cut Solenoid Valve : (1), (4)
Reservoir Cut Solenoid Valves : (2), (3)
Pressure Holding Valves : (5), (6), (7), (8)
Pressure Reduction Valves : (9), (10), (11), (12)

CH

9. System Operation

Normal Braking

During normal braking, all solenoid valves are turned OFF.

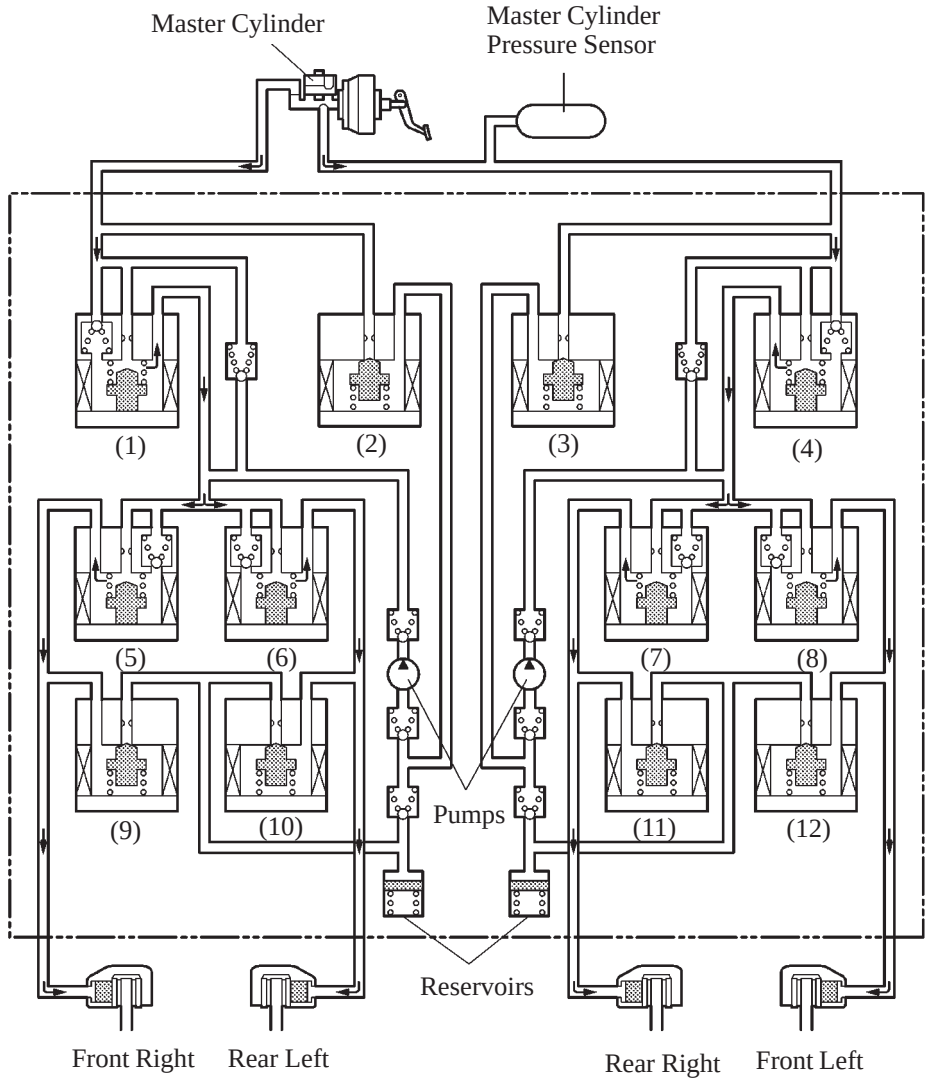

240CH61

Master Cylinder Cut Solenoid Valve : (1), (4)
Reservoir Cut Solenoid Valves : (2), (3)
Pressure Holding Valves : (5), (6), (7), (8)
Pressure Reduction Valves : (9), (10), (11), (12)

ABS with EBD Operation

Based on the signals received from the 4wheel speed sensors, the skid control ECU calculates each wheel speed and deceleration, and checks wheel slipping conditions. And according to the slipping condition, the skid control ECU controls the pressure holding valve and pressure reduction valve in order to adjust the fluid pressure of the each wheel cylinder in the following 3 modes: pressure reduction, pressure holding, pressure increase modes.

▶ System Diagram ◀

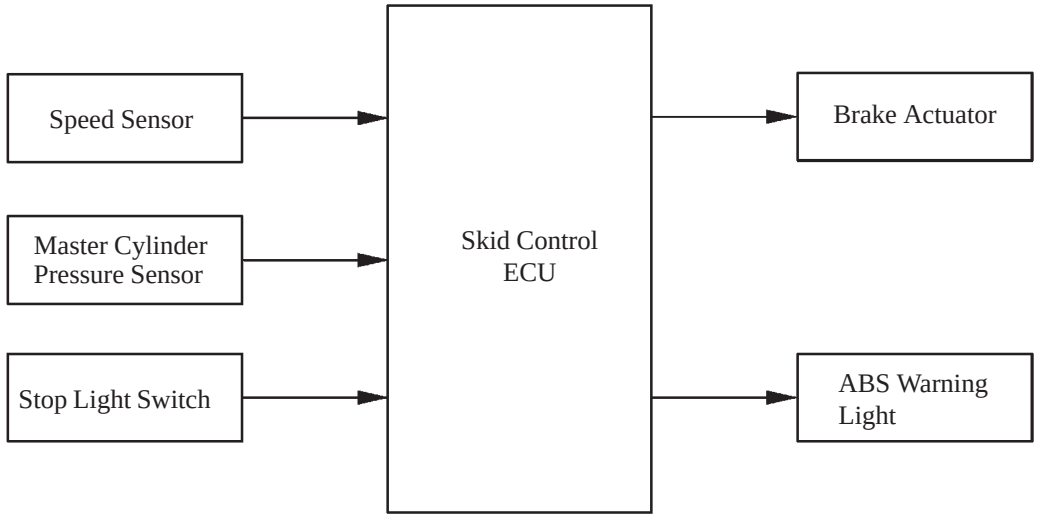

208CH30

Not Activated	Normal Braking	—	—
Activated	Increase Mode	Holding Mode	Reduction Mode
Hydraulic Circuit	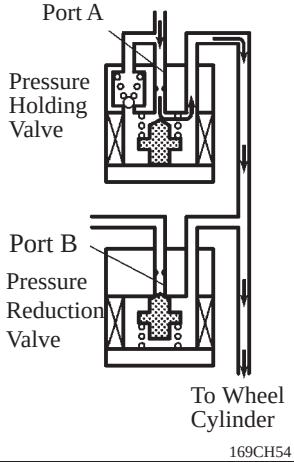 169CH54	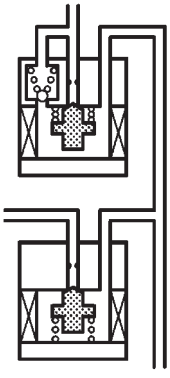 169CH55	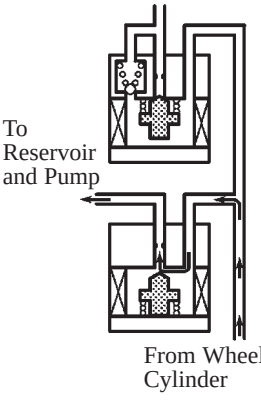 169CH56
Pressure Holding Valve (Port A)	OFF (Open)	ON (Close)	←
Pressure Reduction Valve (Port B)	OFF (Close)	←	ON (Open)
Wheel Cylinder Pressure	Increase	Hold	Reduction

Brake Assist Operation

The fluid pressure that has been generated by the pump in the brake actuator is directed to the wheel cylinders. By applying a greater fluid pressure than the master cylinder, a greater braking force is achieved.

▶ System Diagram ◀

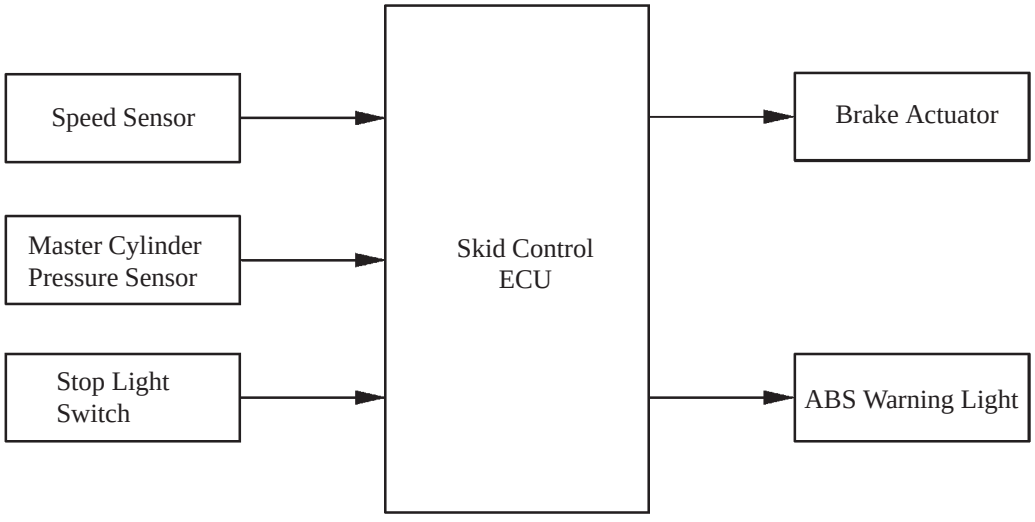

208CH30

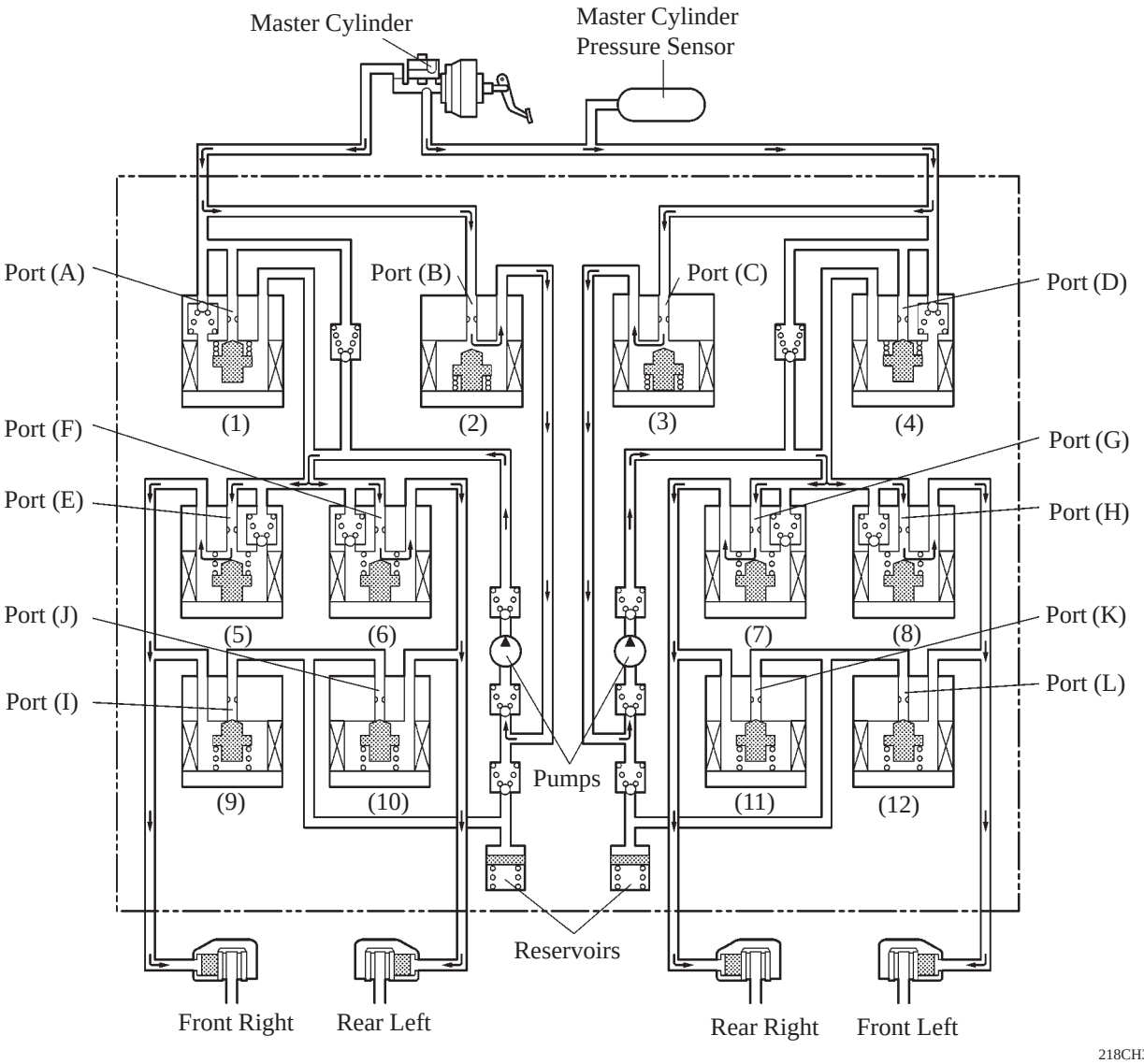

218CH31

Item		Brake Assist Not Activated	Brake Assist Activated
(1), (4)	Master Cylinder Cut Solenoid Valve	OFF (Open)	ON (Close)
	Port: (A), (D)		
(2), (3)	Reservoir Cut Solenoid Valve	OFF (Close)	←
	Port: (B), (C)		
(5), (6), (7), (8)	Pressure Holding Valve	OFF (Open)	←
	Port: (E), (F), (G), (H)		
(9), (10), (11), (12)	Pressure Reduction Valve	OFF (Close)	←
	Port: (I), (J), (K), (L)		

CH

TRC Operation

The fluid pressure is generated by the pump is regulated by the master cylinder cut solenoid valve to the required pressure. Thus, the wheel cylinders of the drive wheels are controlled in the following 3 modes: pressure reduction, pressure holding, and pressure increase modes, to restrain the slippage of the drive wheels.
The diagram below shows the hydraulic circuit in the pressure increase mode when the TRC system is activated.
In other, the pressure holding valve and the pressure reduction valve are turned ON/OFF according to the ABS operation pattern described on the previous page.

▶ System Diagram ◀

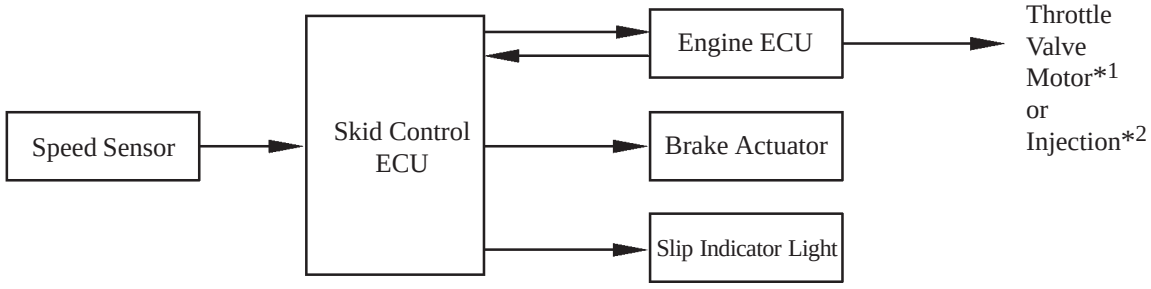

*1: 1AZ-FSE Engine
*2: 1CD-FTV Engine

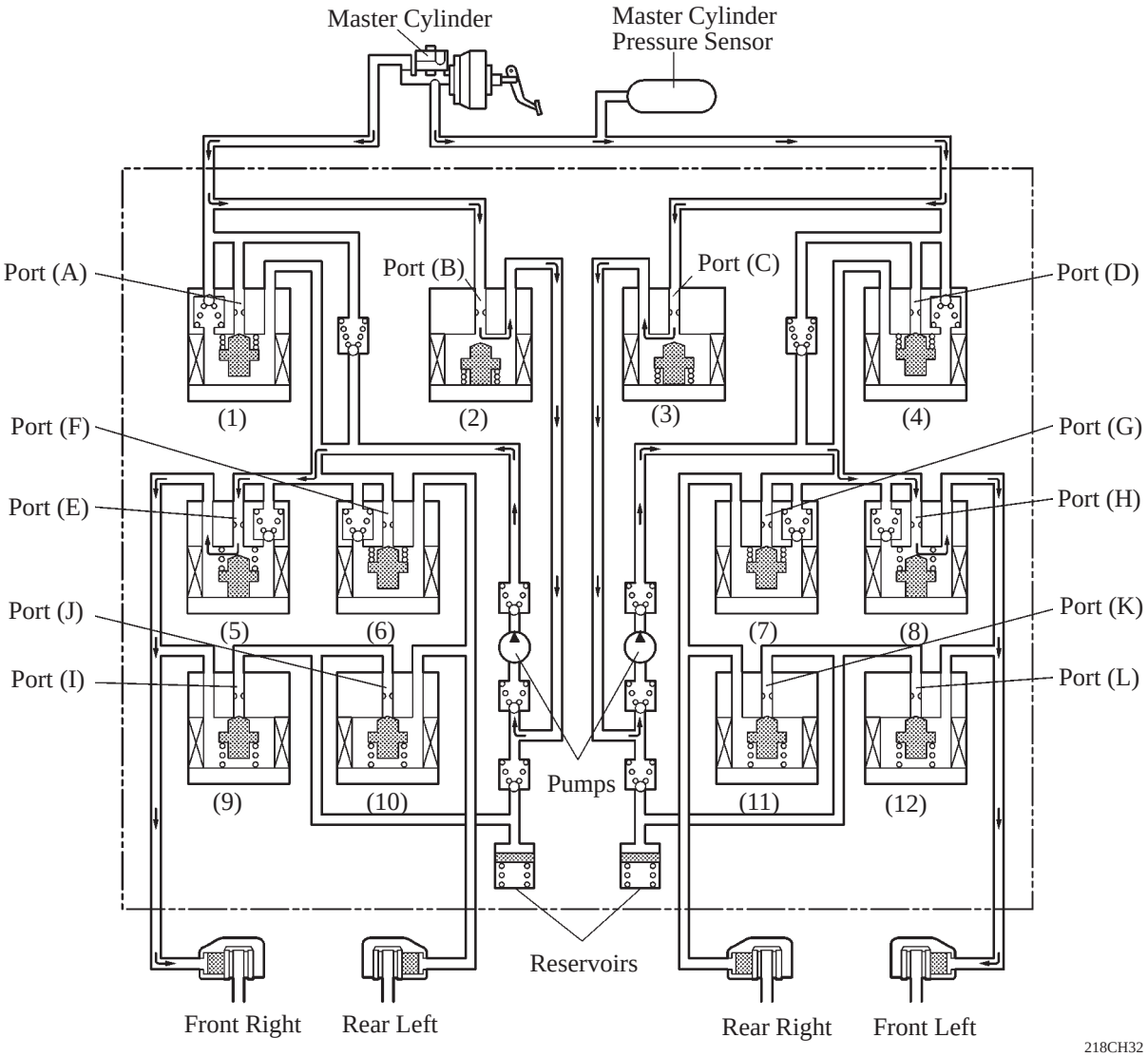

Item			TRC not Activated	TRC Activated		
				Increase Mode	Hold Mode	Reduction Mode
(1), (4)	Master Cylinder Cut Solenoid Valve		OFF (Open)	ON (Close)	←	←
	Port: (A), (D)					
(2), (3)	Reservoir Cut Solenoid Valve		OFF (Close)	ON (Open)	←	←
	Port: (B), (C)					
Front Brake	(5), (8)	Pressure Holding Valve	OFF (Open)	←	ON (Close)	←
		Port: (E), (H)				
	(9), (12)	Pressure Reduction Valve	OFF (Close)	←	←	ON (Open)
		Port: (I), (L)				
	Wheel Cylinder Pressure		—	Increase	Hold	Reduction
Rear Brake	(6), (7)	Pressure Holding Valve	OFF (Open)	ON (Close)	←	←
		Port: (F), (G)				
	(10), (11)	Pressure Reduction Valve	OFF (Close)	←	←	←
		Port: (J), (K)				
	Wheel Cylinder Pressure		—	—	—	—

CH

VSC Operation

1) General

The VSC system, by way of solenoid valves, controls the fluid pressure that is generated by the pump and applies it to the brake wheel cylinder of each wheel in the following 3 modes: pressure reduction, pressure holding, and pressure increase modes. As a result, the tendency front wheel skid or rear wheel skid is restrained.

▶ System Diagram ◀

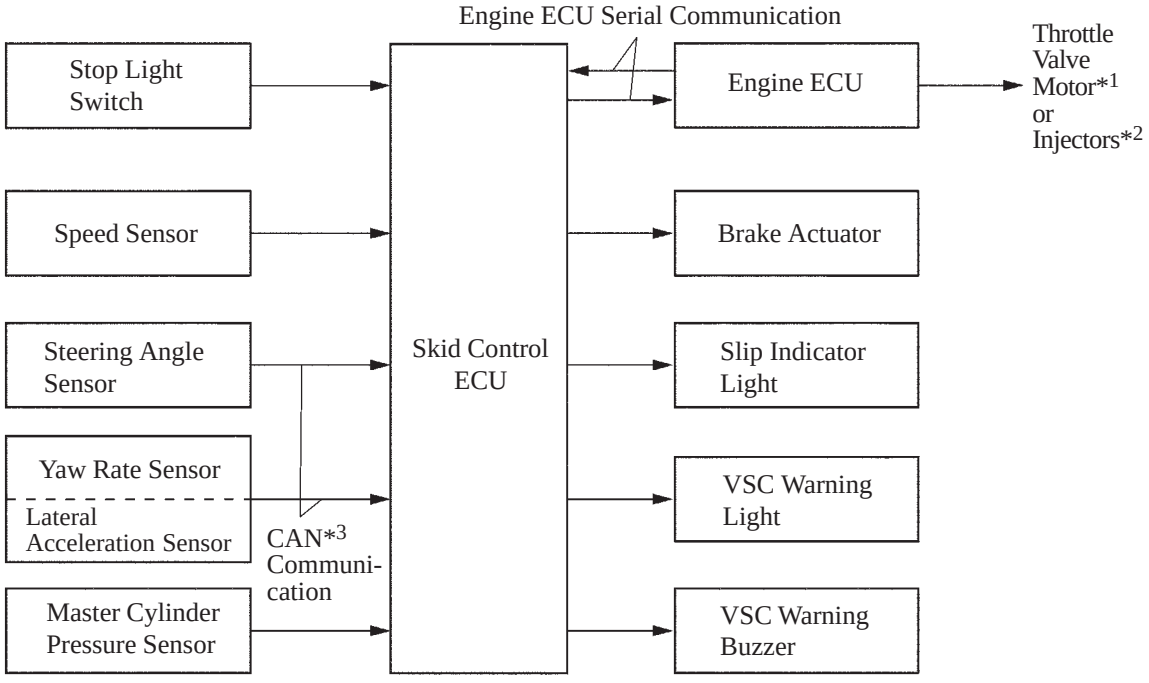

240CH91

*1: 1AZ-FSE Engine
*2: 1CD-FTV Engine
*3: CAN (Controller Area Network)

2) Front Wheel Skid Restraining (Turning to the Right)

In the front wheel skid control, the brake of the front wheels and rear wheel of the inner side of the turn is applied.

Also, depending on whether the brake is ON or OFF and the condition of the vehicle, there are circumstances in which the brake might not be applied to the wheels even if those wheels are targeted for braking.

The diagram below shows the hydraulic circuit in the pressure increase mode, as it restrains the front wheel skid condition while the vehicle makes a right turn.

The pressure holding valve and the pressure reduction valve are turned ON/OFF according to the ABS operation pattern.

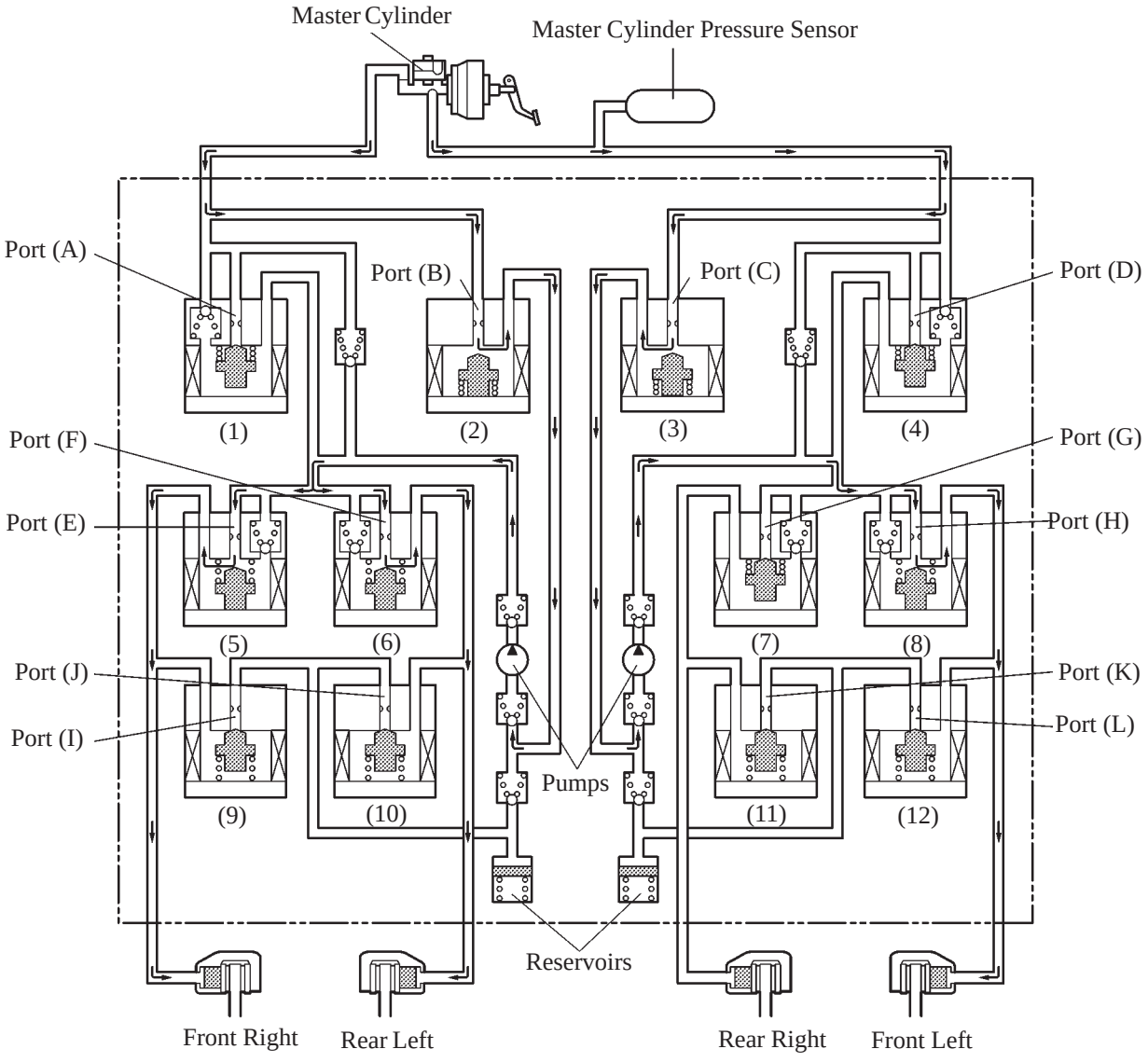

Increase Mode

218CH33

CH

Item				VSC not Activated	VSC Activated		
					Increase Mode	Hold Mode	Reduction Mode
	Master Cylinder Cut Solenoid Valve			OFF (Open)	ON (Close)	←	←
	Port: (A), (D)						
(2), (3)	Reservoir Cut Solenoid Valve			OFF (Open)	ON (Open)	←	←
	Port: (B), (C)						
Front Brake	(5), (8)	Pressure Holding Valve		OFF (Open)	←	ON (Close)	←
		Port: (E), (H)					
	(9), (12)	Pressure Reduction Valve		OFF (Close)	←	←	ON (Open)
		Port: (I), (L)					
	Wheel Cylinder Pressure			—	Increase	Hold	Reduction
Rear Brake	(6)	Pressure Holding Valve (Rear Right)		OFF (Open)	←	ON (Close)	←
		Port: (F)					
	(7)	Pressure Holding Valve (Rear Left)		OFF (Open)	ON (Close)	←	←
		Port: (G)					
	(10)	Pressure Reduction Valve (Rear Right)		OFF (Close)	←	←	ON (Open)
		Port: (J)					
	(11)	Pressure Reduction Valve (Rear Left)		OFF (Close)	←	←	←
		Port: (K)					
	Wheel Cylinder Pressure		Right	—	Increase	Hold	Reduction
			Left	—	—	—	—

3) Rear Wheel Skid Restrain (Turning to the Right)

In rear wheel skid restrain, the brake of the front and rear wheels of the outer circle of the turn is applied. As an example, the diagram below shows the hydraulic circuit in the pressure increase mode, as it restrains the rear wheel skid condition while the vehicle make a right turn.

As in front wheel skid restrain the pressure holding valve and the pressure reduction valve are turned ON/OFF according to the ABS operating pattern.

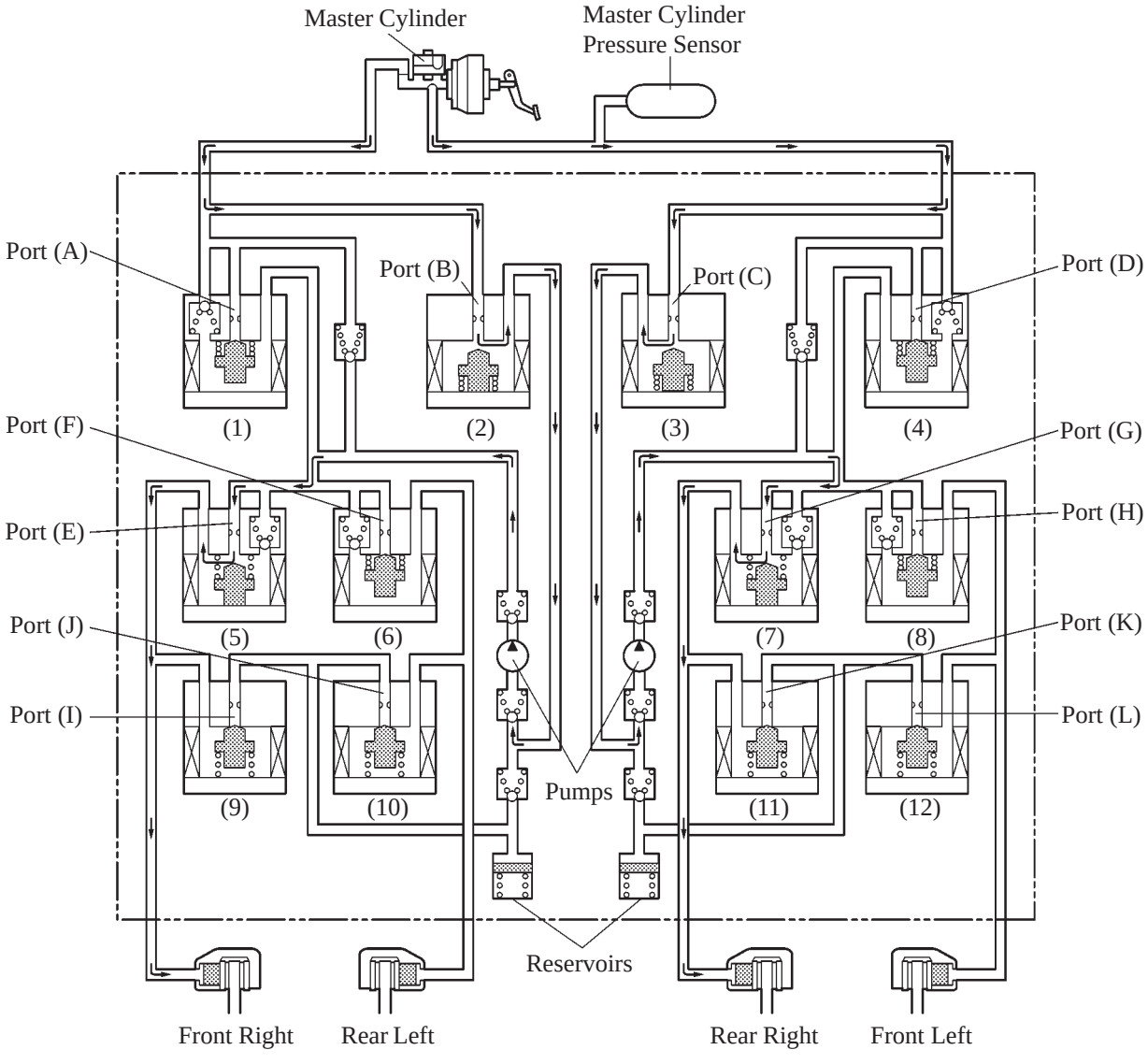

Increase Mode

CH

Item				VSC not Activated	VSC Activated		
					Increase Mode	Hold Mode	Reduction Mode
(1), (4)	Master Cylinder Cut Solenoid Valve Port: (A), (D)			OFF (Open)	ON (Close)	←	←
(2), (3)	Reservoir Cut Solenoid Valve Port: (B), (C)			OFF (Close)	ON (Open)	←	←
Front Brake	(8)	Pressure Holding Valve (Front Right) Port: (H)		OFF (Open)	ON (Close)	←	←
	(5)	Pressure Holding Valve (Front Left) Port: (E)		OFF (Open)	←	ON (Close)	←
	(12)	Pressure Reduction Valve (Front Right) Port: (L)		OFF (Close)	←	←	←
	(9)	Pressure Reduction Valve (Front Left) Port: (I)		OFF (Close)	←	←	ON (Open)
	Wheel Cylinder Pressure		Right	—	—	—	—
			Left	—	Increase	Hold	Reduction
Rear Brake	(6)	Pressure Holding Valve (Rear Right) Port: (F)		OFF (Open)	ON (Close)	←	←
	(7)	Pressure Holding Valve (Rear Left) Port: (G)		OFF (Open)	←	ON (Close)	←
	(10)	Pressure Reduction Valve (Rear Right) Port: (J)		OFF (Close)	←	←	←
	(11)	Pressure Reduction Valve (Rear Left) Port: (K)		OFF (Close)	←	←	ON (Open)
	Wheel Cylinder Pressure		Right	—	—	—	—
			Left	—	Increase	Hold	Reduction

10. Skid Control ECU

VSC

Based on the 4 type of sensor signals received from the speed sensors, yaw rate sensor, deceleration sensor and steering sensor, the skid control ECU calculates the amount of vehicle condition.
If a strong front wheel skid or rear wheel skid tendency is created during an emergency avoidance maneuver or cornering, and the skid control ECU determines that the amount of vehicle condition exceeds a prescribed value, it controls the engine torque and the brake fluid pressure according to the amount of the vehicle condition.

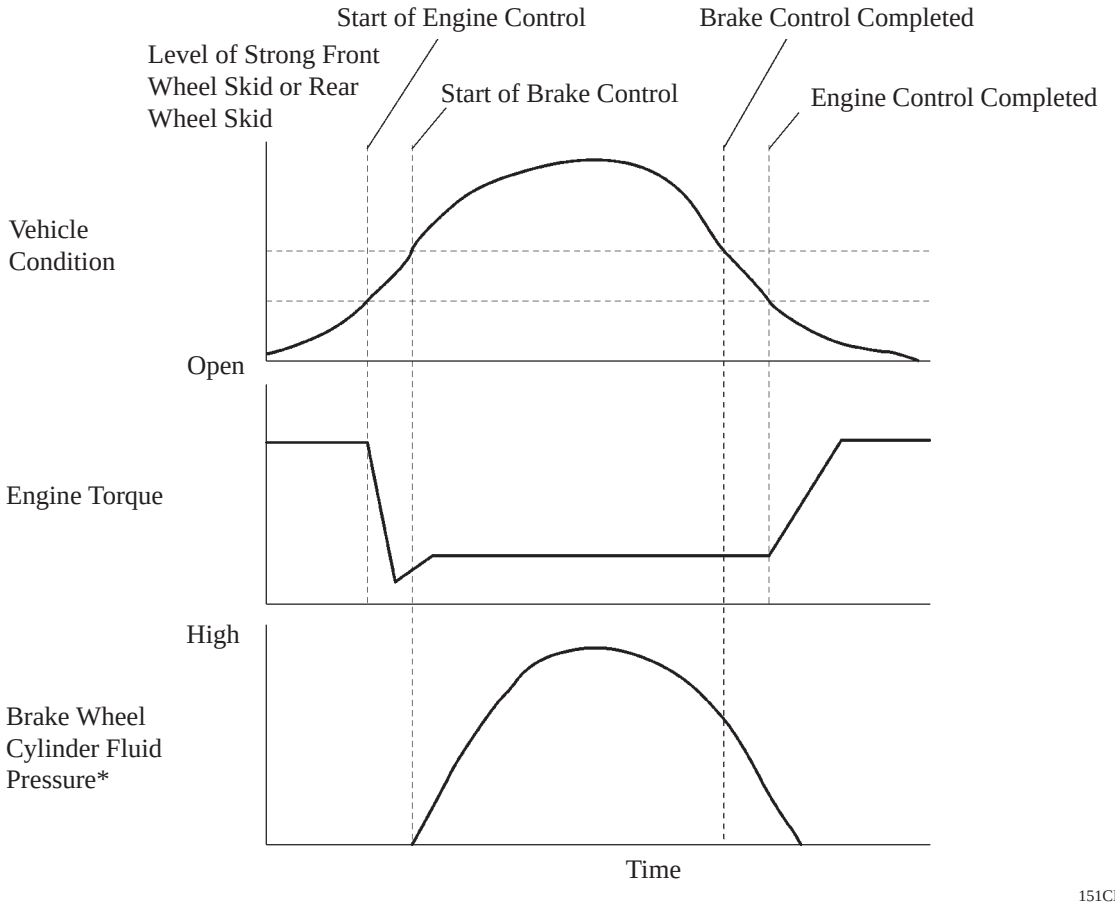

*: The wheel cylinder that activates varies depending on the condition of the vehicle.

Initial Check

Each time the ignition switch is turned ON, and the vehicle reaches approximately speed of 6 km/h (4 mph) or more, the skid control ECU performs the initial check.
The functions of each solenoid valve and pump motor in the brake actuator are checked in order.

Self-Diagnosis

- If the skid control ECU detects a malfunction in the ABS with EBD, Brake Assist, TRC, and VSC systems, the ABS, brake system, VSC warning lights and TRC OFF indicator light that corresponds to the function in which the malfunction has been detected indicates or lights up, as indicated in the table below, to alert the driver of the malfunction.

○: Light ON —: Light OFF

Item	ABS	EBD	Brake Assist	TRC	VSC	Skid Control ECU
ABS Warning Light	○	○	○	—	—	○
Brake System Warning Light	—	○	—	—	—	○
TRC OFF Indicator Light*	○	○	○	○	○	○
VSC Warning Light	○	○	○	○	○	○

*: without pushing “TRC OFF” switch

- At the same time, the DTC (Diagnostic Trouble Code) are stored in memory. The DTC can be read by connecting the SST (09843-18040) between the Tc and CG terminals DLC3, and observing the blinking of the ABC warning light and VSC warning light or by connecting a hand-held tester.
- This system has a sensor signal check (test mode) function. This function is activated by connecting the SST (09843-18040) between the Ts and CG terminals of the DLC3 or by connecting a hand-held tester.
- If the skid control ECU detects a malfunction during a sensor check, it stores the DTC in its memory. This DTC can be read during a sensor signal check operation by connecting the Tc and CG terminals of the DLC3 and observing the blinking of the ABS warning light and the VSC warning light, or on a hand-held tester.

For details on the DTC that are stored in skid control ECU memory and the DTC that are output through the sensor signal check function, see the Avensis Repair Manual (Pub. No. RM1018E).

▶ DTC Chart (blinking ABS warning light and VSC warning light) ◀

DTC No.		Detection Item	DTC No.		Detection Item
2-digit	5-digit		2-digit	5-digit	
11	C0278	Open or short circuit in ABS solenoid relay circuit	37	C1337	Some tire's different size is from the other tire's
13	C0273	Open or short circuit in ABS motor relay circuit	38	C1332	Open circuit in the right rear speed sensor circuit
21	C0226	Open or short circuit in brake actuator	39	C1333	Open circuit in the left rear speed sensor circuit
22	C0236	Open or short circuit in brake actuator	41	C1241	Low battery positive voltage or abnormally high battery positive voltage
23	C0246	Open or short circuit in brake actuator	42	C1301	Malfunction in CAN communication circuit (steering angle sensor circuit, yaw rate sensor circuit)
24	C0256	Open or short circuit in brake actuator	43	C0365	Malfunction in lateral acceleration sensor (combined in yaw rate sensor)
25	C1225	Open or short circuit in brake actuator circuit (SMC1)	44	C1224	Open or short circuit of NE signal circuit
26	C1226	Open or short circuit in brake actuator circuit (SMC2)	45	C1201	Malfunction in engine system
27	C1227	Open or short circuit in brake actuator circuit (SRC1)	51	C1350	● Pump motor is locked ● Open circuit in pump motor ground
28	C1228	Open or short circuit in brake actuator circuit (SRC2)	53	C1246	Malfunction in master cylinder pressure sensor
31	C0200	Right front wheel speed sensor signals malfunction	54	C1208	Malfunction in steering angle sensor
32	C0205	Left front wheel speed sensor signals malfunction	55	C0371	Open or short circuit in yaw rate sensor circuit
33	C0210	Right rear wheel speed sensor signals malfunction	58	C1249	Open circuit in stop light switch circuit
34	C0215	Left rear wheel speed sensor signals malfunction	59	C1203	Engine ECU communication circuit malfunction
35	C1330	Open circuit in the right front speed sensor circuit	62	C1300	Malfunction in skid control ECU
36	C1331	Open circuit in the left front speed sensor circuit	88	C1288	● Miss match of transmission version ● Steering sensor calibration undone

CH

▶ DTC Chart of Sensor Check (blinking ABS warning light and VSC warning light) ◀

DTC No.		Detection Item	DTC No.		Detection Item
2-digit	5-digit		2-digit	5-digit	
71	C1271	Low output voltage of right front speed sensor	75	C1275	Abnormal change in output voltage of right front speed sensor
72	C1272	Low output voltage of left front speed sensor	76	C1276	Abnormal change in output voltage of left front speed sensor
73	C1273	Low output voltage of right rear speed sensor	77	C1277	Abnormal change in output voltage of right rear speed sensor
74	C1274	Low output voltage of left rear speed sensor	78	C1278	Abnormal change in output voltage of left rear speed sensor

Fail-Safe

- In the event of a malfunction in the TRC and/or VSC, the skid control ECU prohibits the TRC and VSC operations.
- In the event of a malfunction in the ABS and/or Brake Assist, the skid control ECU prohibits the ABS with EBD, Brake Assist, TRC, and VSC operations.
- In the event of the malfunction in the EBD control, skid control ECU prohibits the EBD control. Thus, the brake and fuel injection cut off control will be opened in the same condition as in condition without the ABS with EBD, Brake Assist, TRC, and VSC.

STEERING

■ DESCRIPTION

- As in the previous model, a rack and pinion type steering gear is used on all models.
- Models equipped with the 1ZZ-FE and 3ZZ-FE engine have a vehicle-speed sensing type EPS (Electric Power Steering) system. This system directly assists the driver's steering by motor.
- As in the previous model, the engine revolution sensing type hydraulic power steering is used for the models with 1AZ-FE, 1AZ-FSE, and 1CD-FTV engine.
- The power steering vane pump on hydraulic power steering model has newly adopted a flow volume return pump which makes the discharge pressure flow volume return at middle and high speed, thus ensuring a fine steering feeling.
- All models have a tilt and telescopic mechanism.
- An energy absorbing mechanism has been adopted in the steering column.

▶ Specification ◀

Engine	1ZZ-FE, 3ZZ-FE	1AZ-FE, 1AZ-FSE, 1CD-FTV
Type	Vehicle-Speed Sensing Type EPS	Engine Revolution Sensing Type Hydraulic Power Steering
Gear Ratio (Overall)	17.5	16.03
No. of Turns Lock to Lock	3.46	2.96
Rack Stroke mm (in.)	138.4 (5.45)	131.8 (5.18)
Vane Pump Type	—	Pressure Return Type
Fluid Type	—	ATF Type DEXRON® II or III

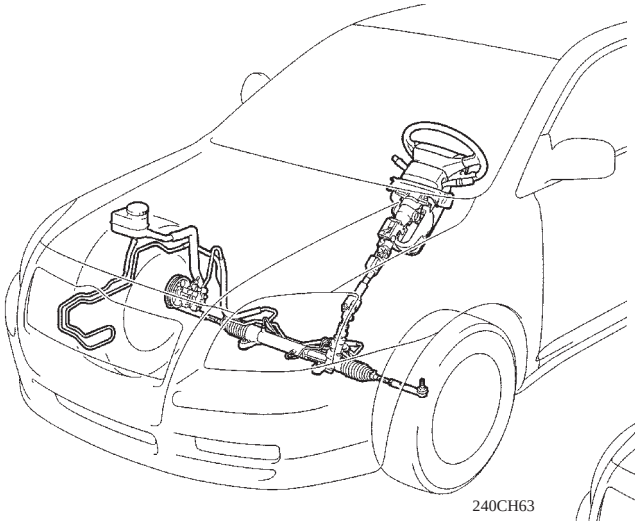

240CH63

Hydraulic Power Steering Models

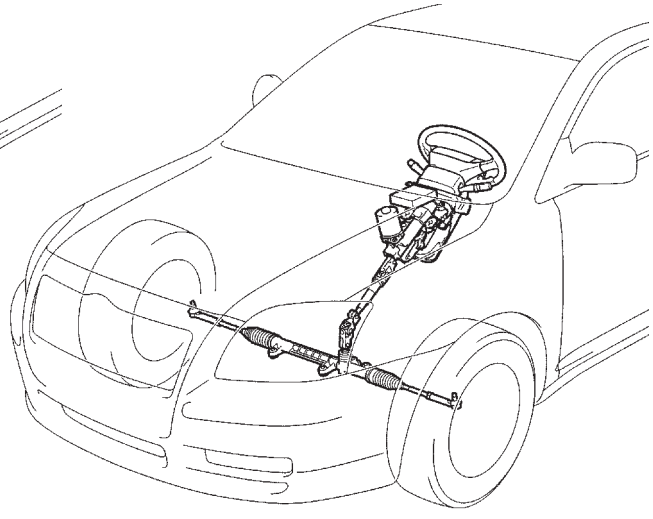

240CH62

EPS Models

■HYDRAULIC POWER STEERING

1. General

As in the previous model, the engine revolution sensing type hydraulic power steering is used for the models with 1AZ-FE, 1AZ-FSE, and 1CD-FTV engine.

The features and the changes of this steering system are the following:

Item		Features and Changes
Steering Gear		● Changed from 3-point bushing mount to 4-point bushing mount. ● Overall gear ratio, rack stroke changed. ● Installation position changed to low center of gravity.
Vane Pump		● Flow volume type vane pump adopted.
Steering Column	Adjusting Mechanism	● Changed from step less tilt mechanism to step less tilt & telescopic mechanism. ● Lock mechanism changed from bolt & nut type to cam type.
	Energy Absorbing Mechanism	● Lower bracket changed to fixed type. Energy absorbing mechanism separate from breakaway bracket adopted. ● Energy absorbing mechanism adopted for contraction of column tube.

2. POWER STEERING VANE PUMP

Construction

In this pump, the control spool to control the pump flow volume in the middle and high range of the pump speed has been discontinued and a rod for the flow control valve which decides the flow volume opening area has been established instead.
Other basic structure and operation are the same as previous model.

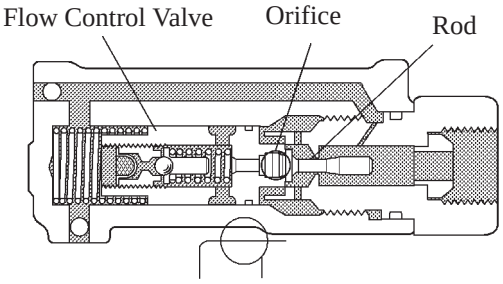

New Model

208CH40

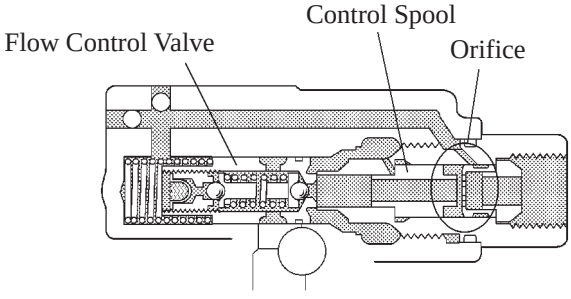

Previous Model

208CH38

Operation

▶ Flow Volume Characteristics ◀

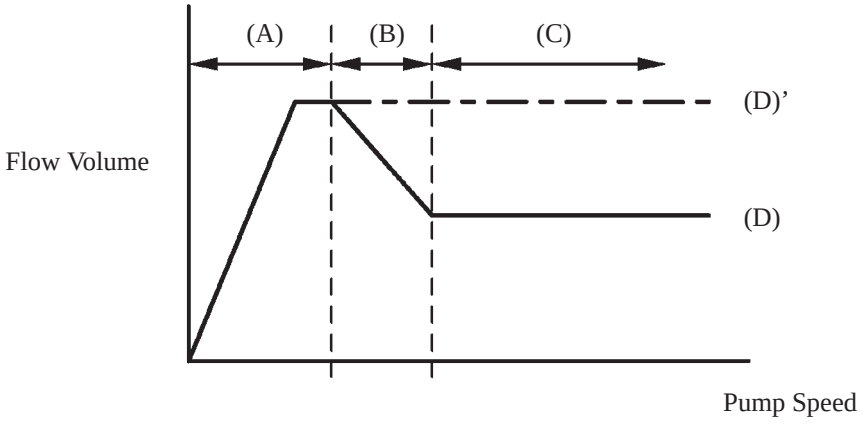

208CH45

CH

Low Speed Range (A)

Flow volume increases in accordance with the increase of pump speed.

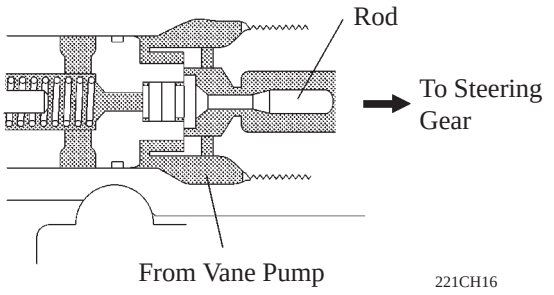

Middle Speed Range without Steering (B)

The flow control valve moves to the left by increasing the flow volume form the vane pump and reduces the flow colume by drawing the orifice accordance to the change of the shaft diameter of the rod.

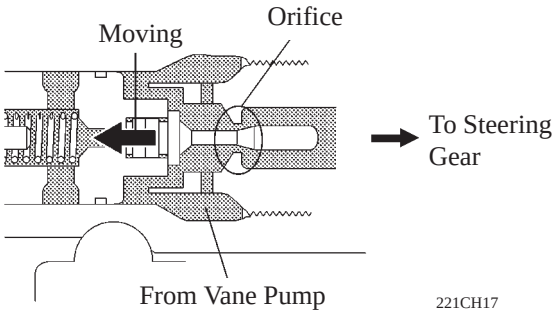

High Speed Range without Steering (C)

The flow control valves moves further left and with the maximum shaft diameter of the rod, the flow volume reduces more.

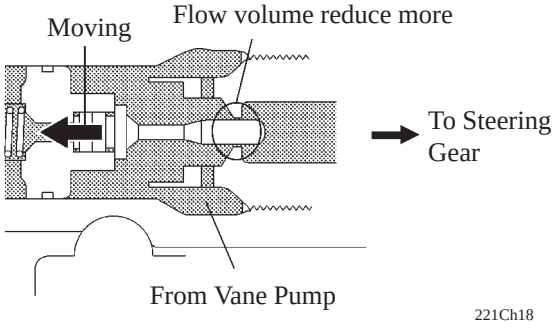

During Pressure Loading (D → D')

If operating the steering in the middle and high speed range, the flow control valve moves to the right according to the pressure increase of the vane pump and this pressure reaches to left side of flow control valve orifice and returning the flow volume.

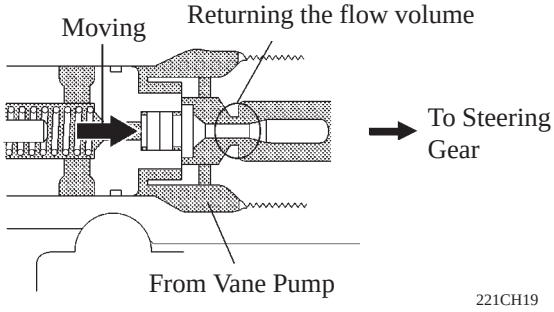

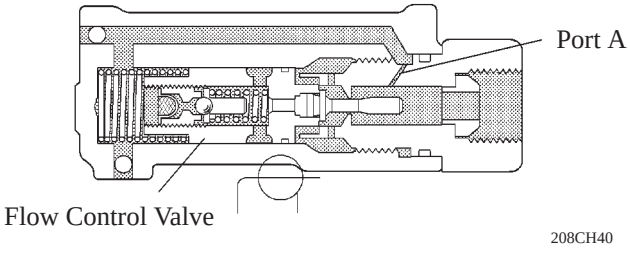

3. TILT AND TELESCOPIC MECHANISM

The tilt and telescopic mechanism consists mainly of the tilt and telescopic lever, steering column tube attachment, breakaway bracket, and tilt and telescopic steering stoppers.
For the telescopic mechanism, the steering column main shaft is connected at the serration engagement.

When locked

When the tilt & telescopic mechanism is in its locked state, the tilt & telescopic lever at B position causes the cam of the tilt & telescopic steering stoppers to tighten the breakaway bracket and steering column tube attachment.
This secures the breakaway bracket, steering column tube attachment, and column tube, so movement in the tilt direction and in the telescopic direction is locked.

When free

When the tilt & telescopic mechanism is in its free state, the tilt & telescopic lever at A position causes the cam of the tilt & telescopic steering stoppers to loosen the breakaway bracket and steering column tube attachment. This frees the column tube to move in the tilt direction and in the telescopic direction, enabling adjustment.

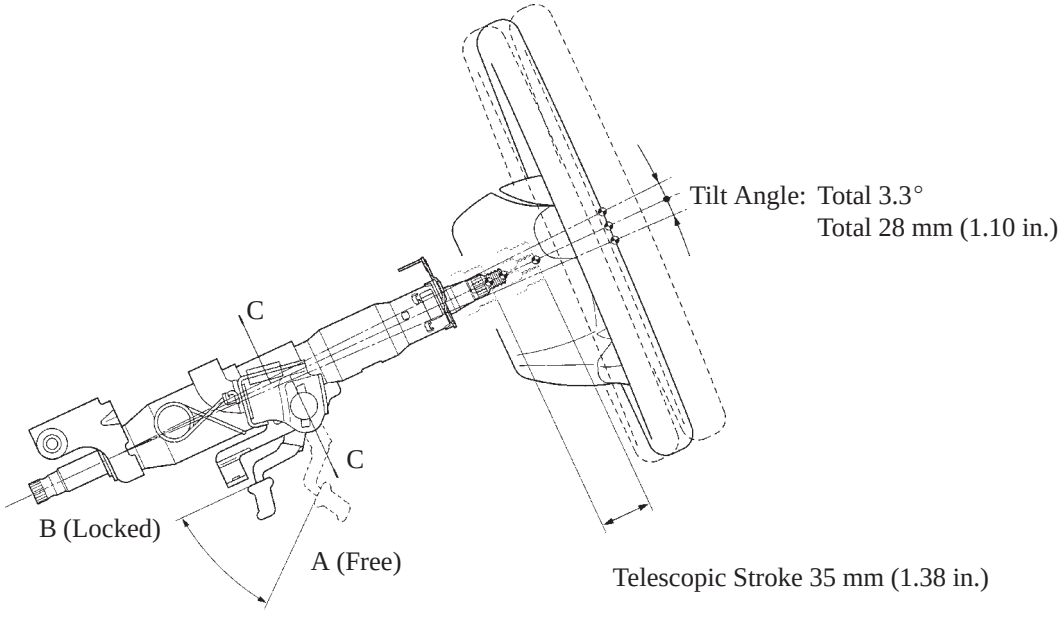

C – C Cross Section

240CH67

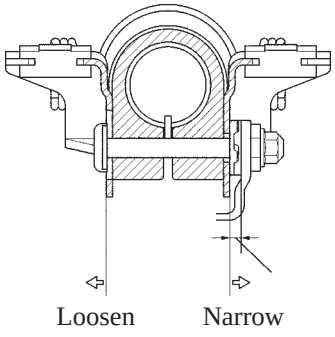

240CH68

Free

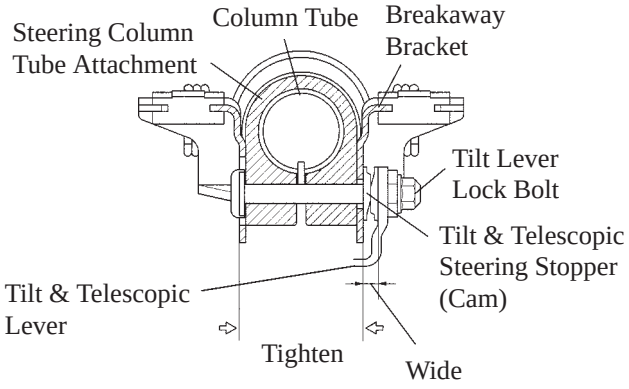

240CH69

Lock

4. ENERGY ABSORBING MECHANISM

Construction

- The steering column has three energy absorbing mechanisms.
- An intermediate shaft is press-fit into the main shaft, absorbing energy through shaft contractions.
- The breakaway bracket is bolted to the instrument panel reinforcement via a capsule. The breakaway bracket and capsule are joined by resin injection. When, due to the column tube contraction, this resin injection is cut and the breakaway bracket separates, energy is absorbed.
- The column tube has a press-fit construction with two energy absorbing springs sandwiched between the steering column tube attachment and the outer tube. When they contract, energy is absorbed due to the frictional resistance.

Operation

When the steering gear box moves during a (primary) collision, the intermediate shaft contracts, thus reducing the chance that the steering column and the steering wheel protrude further into the cabin.
When an impact is transmitted to the steering wheel in a (secondary) collision, the steering wheel and the driver's airbag help absorb the impact. In addition, the inner tube moves all the way to the end of the telescopic range, the breakaway bracket separates, and the column tube contracts. This sequential energy absorbing mechanism helps absorb the impact of the secondary collision.

▶ Primary Collision ◀

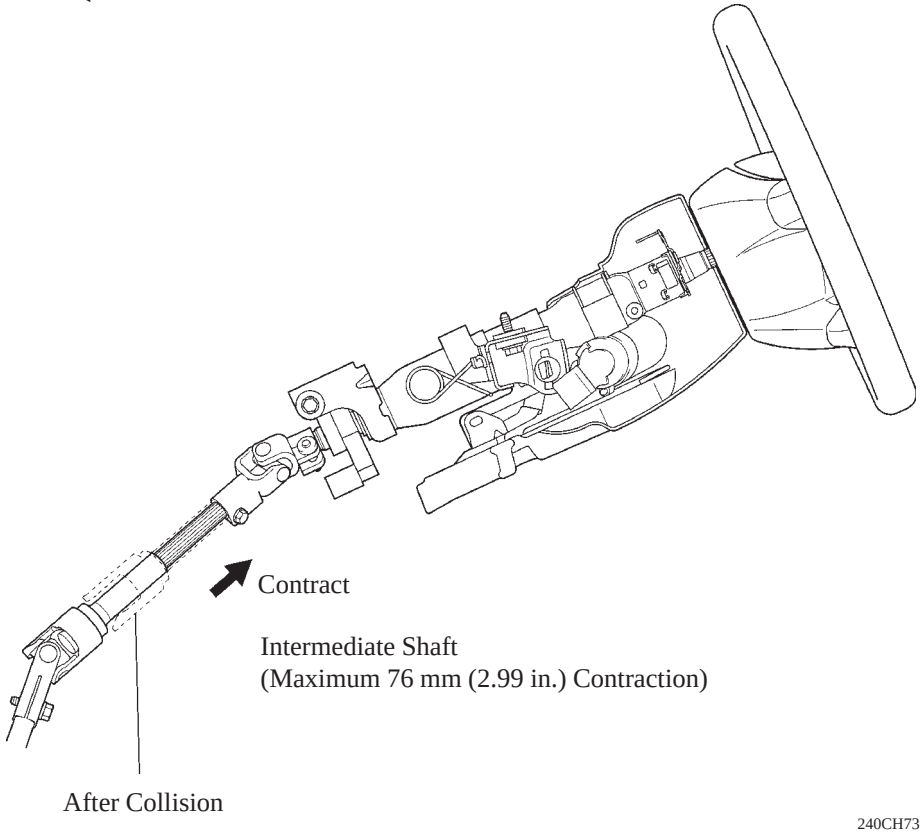

▶ Secondary Collision ◀

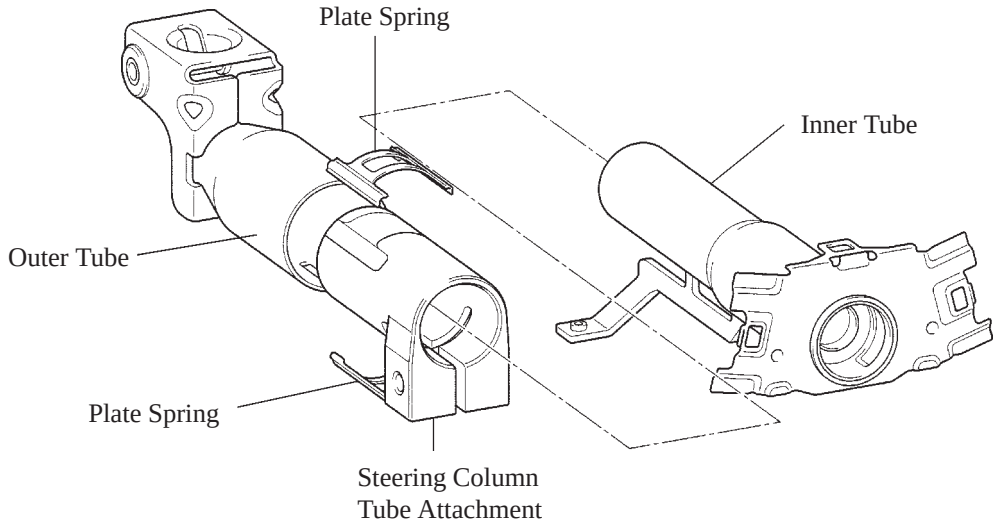

240CH75

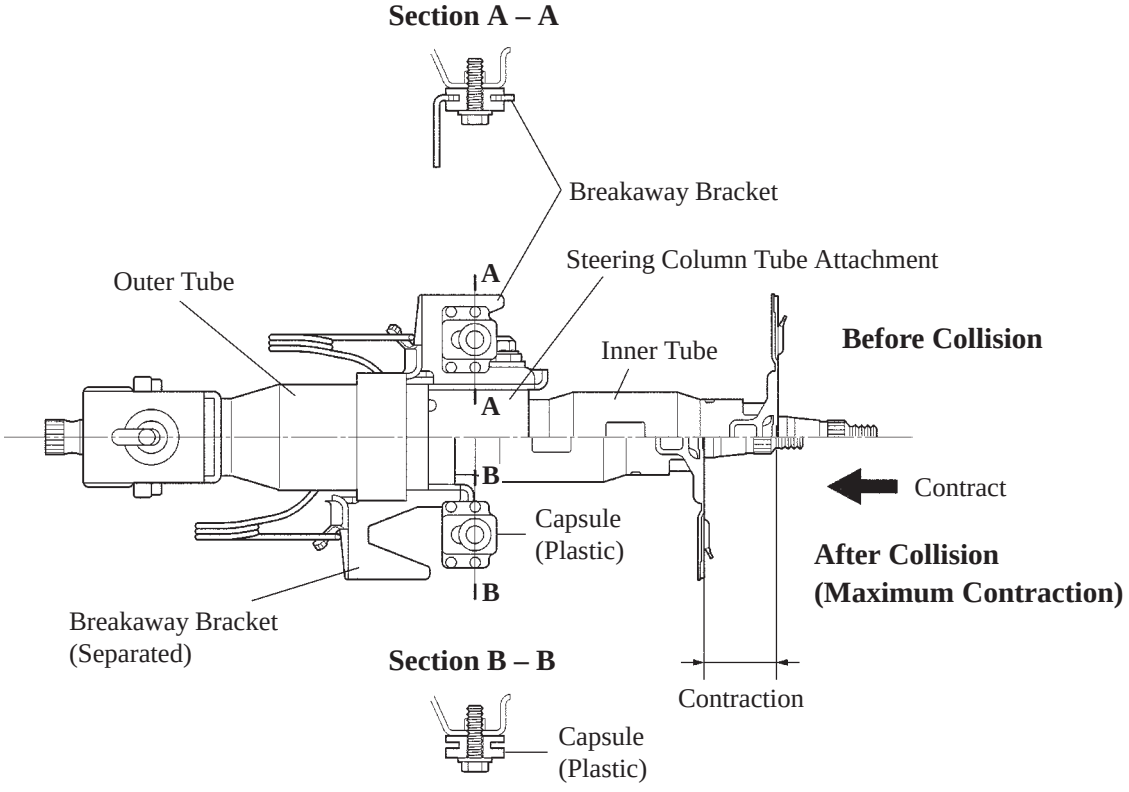

240CH74

■EPS (Electric Power Steering)

1. General

- This system generates torque using a DC motor a reduction mechanism that are mounted on the steering column to assist the driver's steering. The amount of power assist is calculated by the EPS ECU.
- This system offers excellent fuel economy characteristics because power assist is provided by the DC motor that is mounted on the steering column, and this motor consumes energy only when power assist is required.
- Unlike the conventional hydraulic power steering system, this system excels in serviceability because it dose not require pipes, vane pump, pulley and power steering fluid.
- All models have a tilt and telescopic mechanism.
- An energy absorbing mechanism has been adopted in the steering column.

2. System Diagram

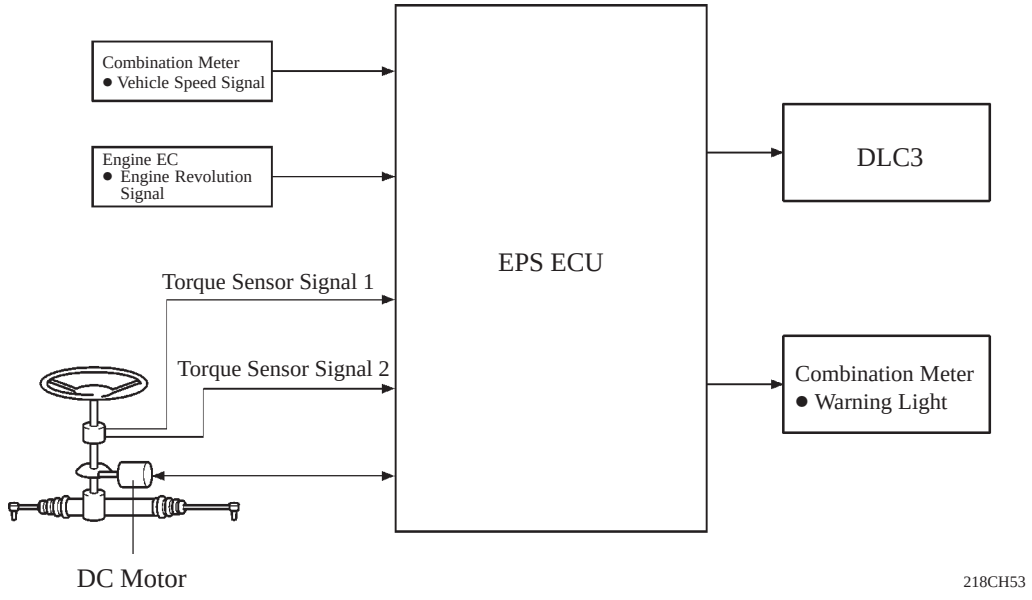

3. Layout of Main Component

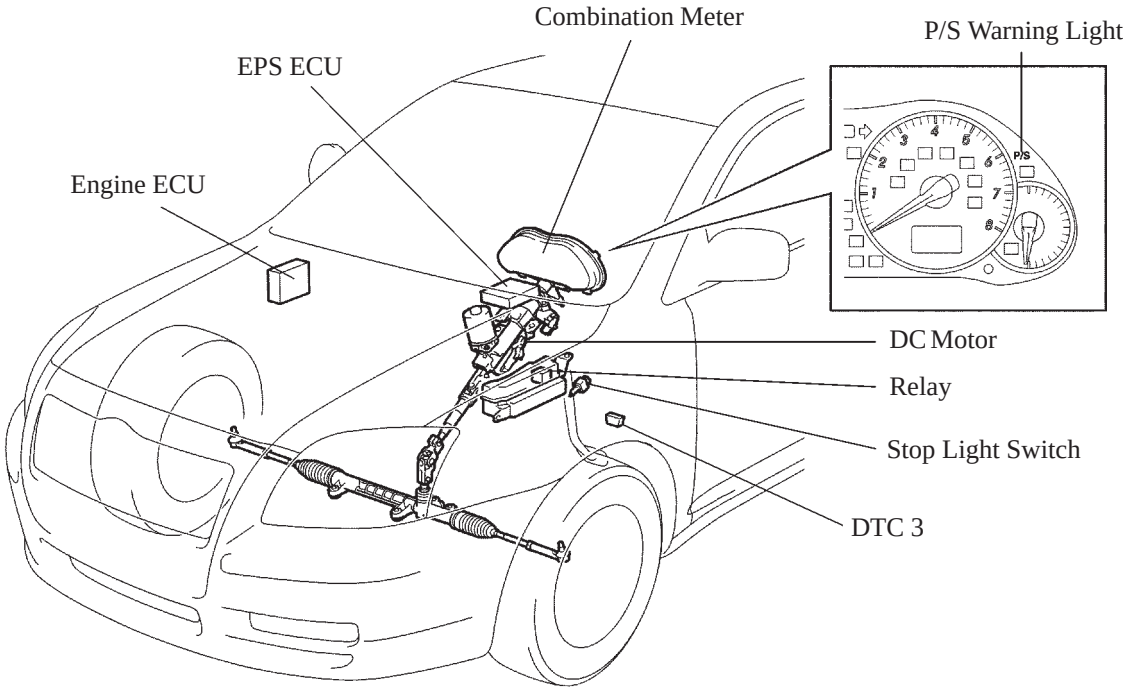

LHD Model

4. Function of Main Component

Components		Function
Steering Column	Torque Sensor	Detects the twist of the torsion bar with this, it calculates the torque that is applied to the torsion bar by changing it into an electrical signal, and outputs this signal to the EPS ECU.
	DC Motor	Generates power assist in accordance with a signal received from the EPS ECU.
	Reduction Mechanism	Reduces the speed of the DC motor through the use of a worm gear and a wheel gear and transmits it to the column shaft.
EPS ECU		Actuates the DC motor mounted on the steering column to providing power assist, based on the signals received from various sensors and vehicle speed signal.
Engine ECU		Engine revolutions signal is outputted to EPS ECU.
Combination Meter		● In case of a malfunction in the system, turns on the P/S warning light. ● Vehicle speed signal is outputted to EPS ECU.
Relay		Supplies power to DC motor and EPS ECU.

5. Constructions and Operation of Main Components

Steering Column

1) General

- A DC motor, reduction mechanism, and a torque sensor are mounted on the steering column.

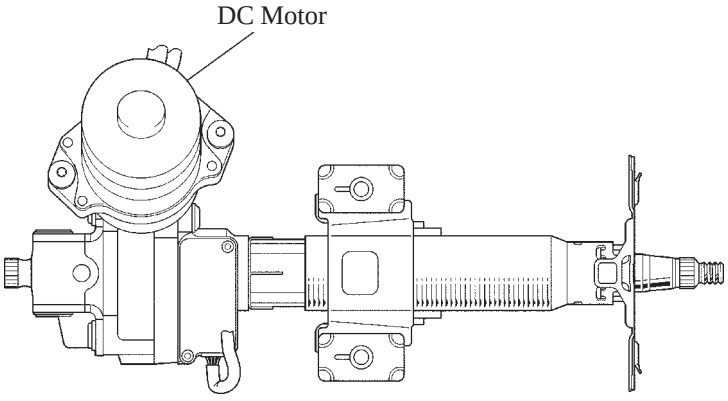

Top View

240CH65

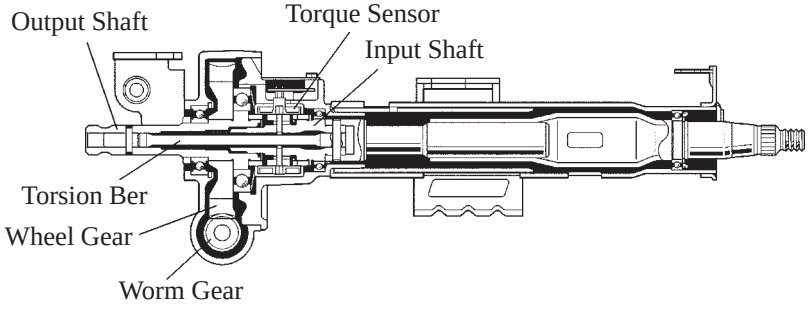

Cross Section

240CH66

2) DC Motor

The DC motor consists of the rotor, stator, and motor shaft.
The torque that is generated by the motor is transmitted via the joint to the worm gear. Then this torque is transmitted via the wheel gear to the column shaft.

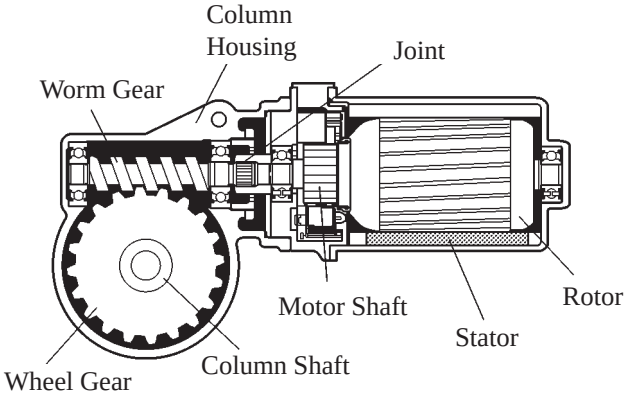

240CH98

3) Reduction Mechanism

This mechanism reduces the speed of the DC motor via the worm gear and the wheel gear, and transmits it to the column shaft.
The worm gear is supported by the ball bearings in order to reduce noise and frictions.

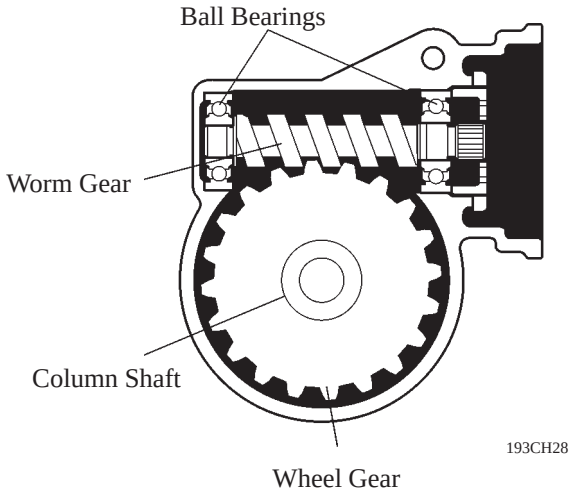

4) Torque Sensor

- The torque sensor detects the twist of the torsion bar with this, it calculates the torque that is applied to the torsion bar by changing it into an electrical signal, and outputs this signal to the EPS ECU.
- Detection ring 1 and detection ring 2 are mounted on the input shaft, and detection ring 3 is mounted on the output shaft. The input shaft and the output shaft are joined by the torsion bar. A detection coil and a correction coil are placed on the outside of the respective detection rings to complete an excitation circuit without making a contact.
- The function of detection ring 1 and 2 is to correct temperature. They detect the temperature changes that occur in the correction coil and correct the deviation that is caused by the temperature changes.
- The detection coil consists of a dual circuit that outputs two signals, VT1 and VT2. The ECU controls the assist amount based on these two signals and at the same time detects a sensor malfunction.

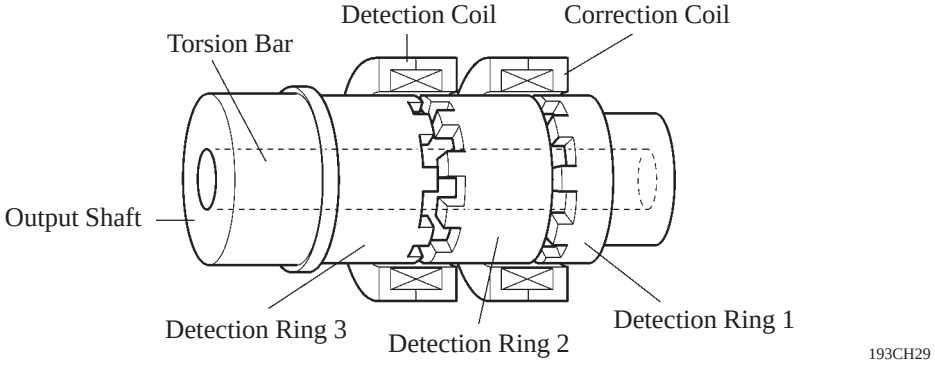

Service Tip

If the steering wheel, steering column, or steering gear is removed and reinstalled, the zero point of the torque sensor must be adjusted. For details, see the Avensis Repair Manual (Pub. No. RM1018E).

a. Straightline Driving

If the vehicle is driven straight and the driver dose not turn the steering wheel, the specified voltage that is output at this time is determined by the ECU to indicate the neutral position of the steering. Therefore, it dose not apply current to the DC motor.

b. When Steering

When a driver turns the steering wheel to the right or left, the twist that is created in the torsion bar creates a relative displacement between detection ring 2 and detection ring 3.
This change is then converted into two electrical signals, VT1 and VT2, and sent to the EPS ECU.
When the steering wheel is turned to the left, a voltage that is lower than the neutral is output as shown in the diagram on the right.
The direction of the turn is thus detected according to these outputs. Furthermore, the amount of steering assist is determined by the magnitude of the output value.

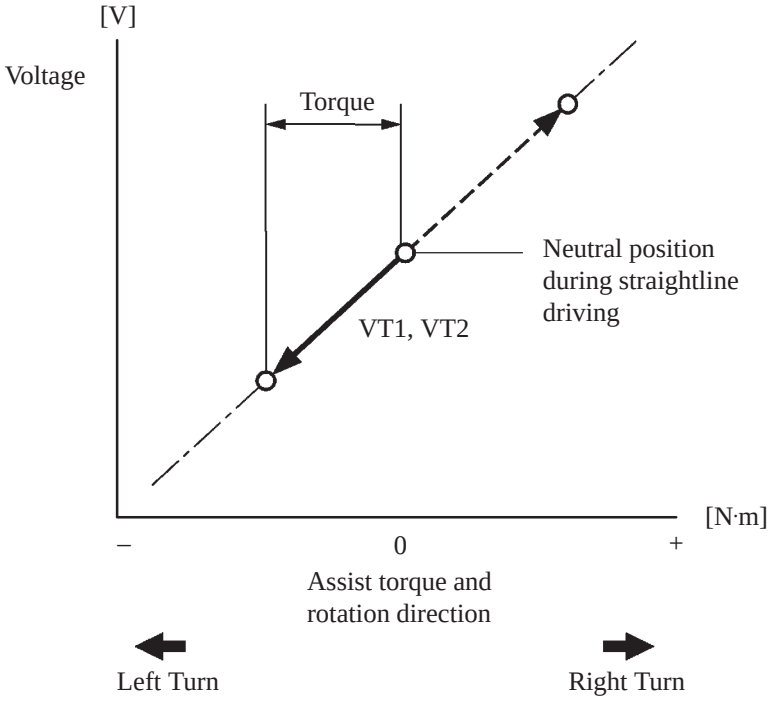

193CH30

EPS ECU

1) EPS Control

The EPS ECU receives signals from various sensors, judges the current vehicle condition, and determines the assist current to be applied to the DC motor accordingly.

2) EPS ECU Temperature Sensor

A temperature sensor is provided in the EPS ECU to detect if the ECU overheats.
If the sensor detects that the ECU has overheated, the assist current to the DC motor is reduced in order to lower the temperature.

3) Self-Diagnosis

- If the EPS ECU detects a problem in the EPS system, the warning light that corresponds to the function in which the malfunction has been detected light up to alert the driver of the malfunction.
- At the same time, the DTCs (Diagnosis Trouble Codes) are stored in memory. The DTCs can be read by connecting the SST (90843-18040) between the Tc and CG terminals of the DLC3 and observing the blinking of the power warning light, or by connecting a hand-held tester.

For details of the DTCs that are stored in EPS ECU memory, see the Avensis Repair Manual (Pub. No. RM1018E).

4) Fail-Safe

- If the EPS ECU detects a malfunction in the EPS system, it turn on the warning light in the combination meter to inform the driver and stops the assist control. As a result, the EPS system operates in the same way as manual steering.
- In case of a malfunction, the fail-safe function activates and the ECU effects various controls. For details refer to the Avensis Repair Manual (Pub. No. RM1018E).

▶ DTC Chart (blinking power steering warning) ◀

DTC No.		Detection Item	DTC No.		Detection Item
2-digit	5-digit		2-digit	5-digit	
11	C1511	Torque sensor circuit malfunction	33	C1533	Power steering ECU assy malfunction
12	C1512		34	C1534	
13	C1513		41	C1541	Speed sensor malfunction
14	C1514	Torque sensor power source circuit malfunction	42	C1542	
15	C1515	Calibration of torque sensor zero point not performed	44	C1544	Engine revolution signal malfunction
16	C1516		45	C1545	
17	C1517	Torque sensor hold malfunction	51	C1551	IG power source circuit malfunction
23	C1523	Motor circuit malfunction	52	C1552	PIG power source circuit malfunction
24	C1524		54	C1554	Power steering relay circuit malfunction
31	C1531	Power steering ECU assy malfunction	55	C1555	EPS motor relay circuit malfunction
32	C1532		81	C1581	Assist map un-written

6. TILT AND TELESCOPIC MECHANISM

The tilt and telescopic mechanism consists mainly of the tilt and telescopic lever, column bracket, breakaway bracket, and tilt and telescopic steering stoppers.
For the telescopic mechanism, the steering column main shaft is connected at the serration engagement.

When locked

When the tilt & telescopic mechanism is in its locked state, the tilt & telescopic lever at B position causes the cam of the tilt & telescopic steering stoppers to tighten the breakaway bracket and column bracket. This secures the breakaway bracket, column bracket, and column tube, so movement in the tilt direction and in the telescopic direction is locked.
The steering column has an off-center cam that moves interlocked with the tilt and telescopic lever to reduce vibration.

When free state

When the tilt & telescopic mechanism is in its free state, the tilt & telescopic lever at A position causes the cam of the tilt & telescopic steering stoppers to loosen the column bracket. This frees the column tube to move in the tilt direction and in the telescopic direction, enabling adjustment.

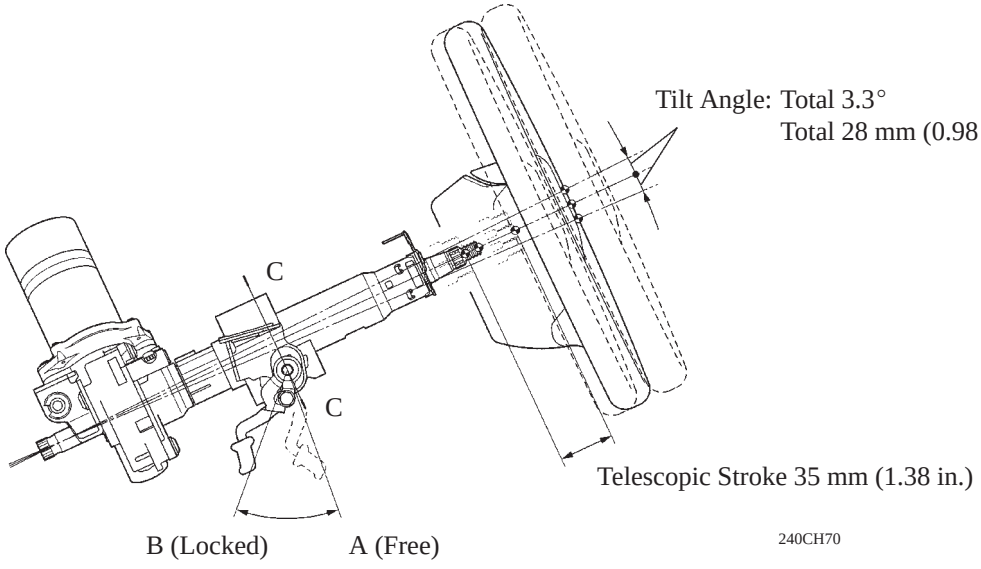

C – C Cross Section

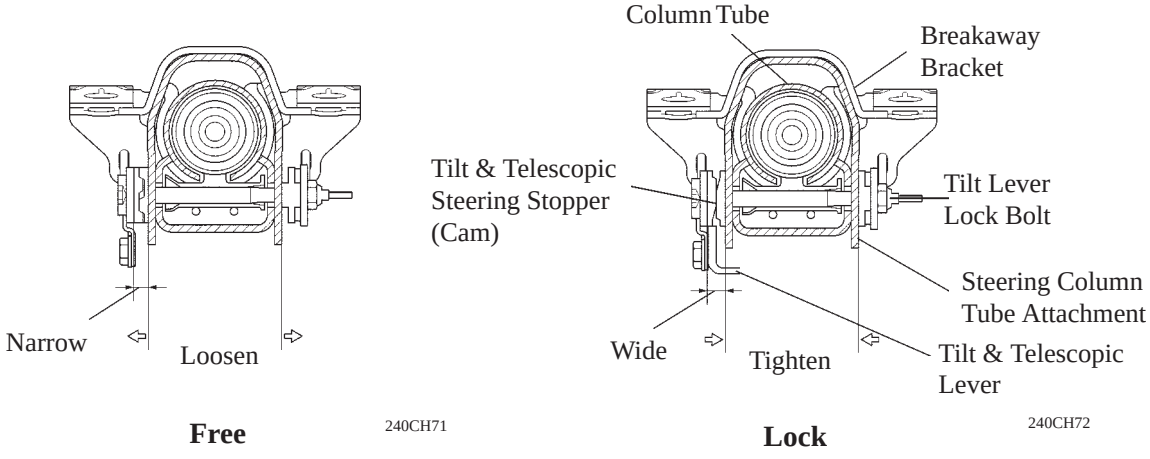

7. ENERGY ABSORBING MECHANISM

Construction

- The steering column has three energy absorbing mechanisms.
- An intermediate shaft is press-fit into the main shaft, absorbing energy through shaft contractions.
- The breakaway bracket is bolted to the instrument panel reinforcement via a capsule. The breakaway bracket and capsule are joined by resin injection. When, due to the column tube contraction, the breakaway bracket separates from the capsule, energy is absorbed by the friction resistance generated.
- The column tube is constructed of a press-fit plastic tube sandwiched between the inner tube and the outer tube. When it contracts, the outer ribs of the plastic tube cut the outer tube, absorbing energy.

Operation

When the steering gear box moves during a (primary) collision, the intermediate shaft contracts, thus reducing the chance that the steering column and the steering wheel protrude further into the cabin.
When an impact is transmitted to the steering wheel in a (secondary) collision, the steering wheel and the driver's airbag help absorb the impact. In addition, the outer tube moves all the way to the end of the telescopic range, the breakaway bracket separates, and the column tube contracts. This sequential energy absorbing mechanism helps absorb the impact of the secondary collision.

▶ Primary Collision ◀

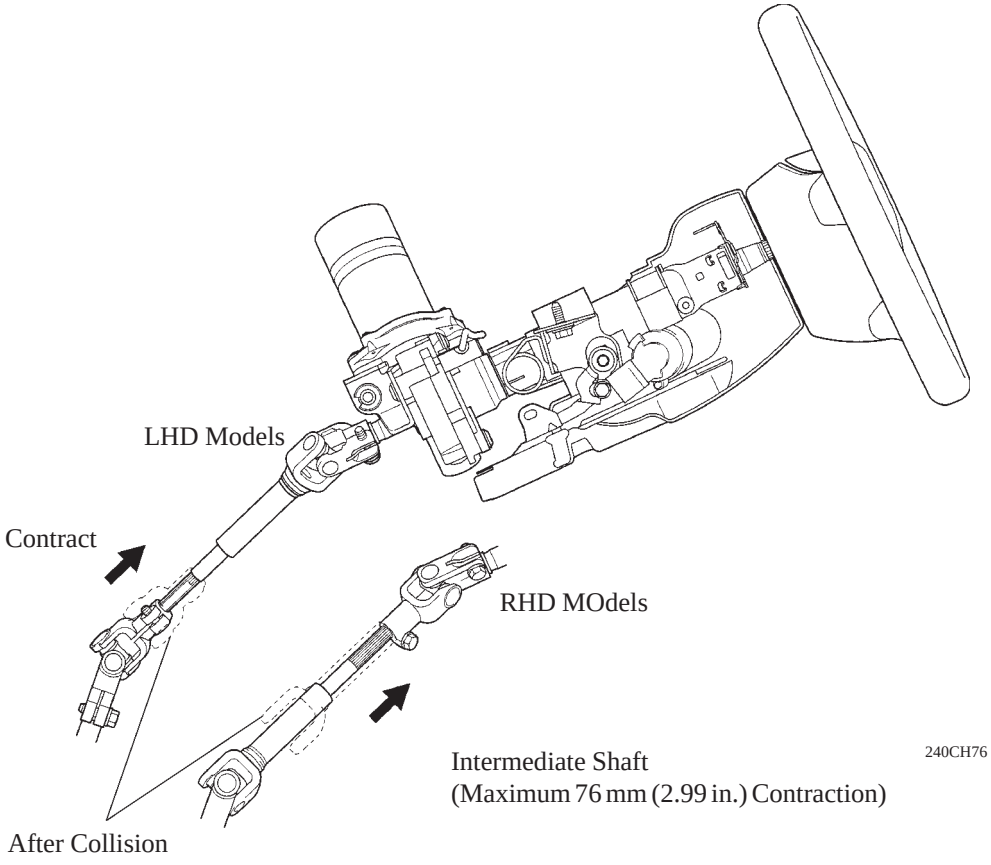

▶ Secondary Collision ◀

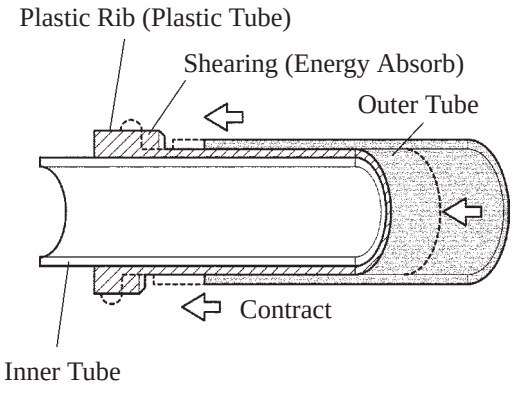

Before Collision

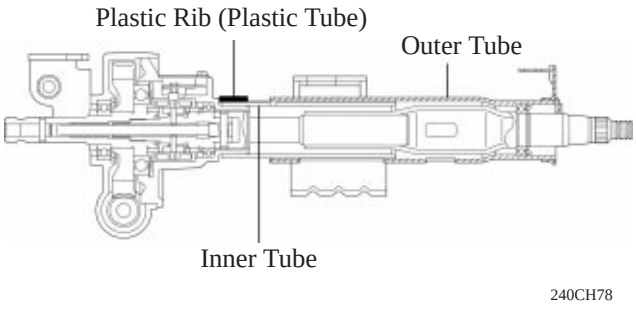

After Collision
(Maximun Contraction)

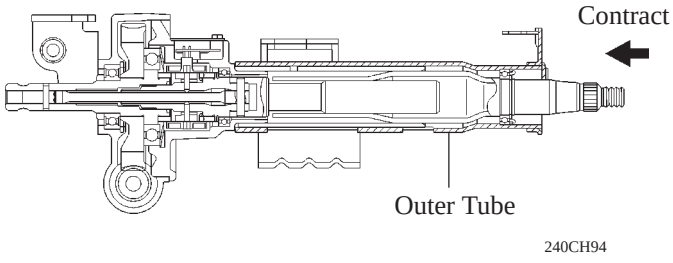

Before Collision

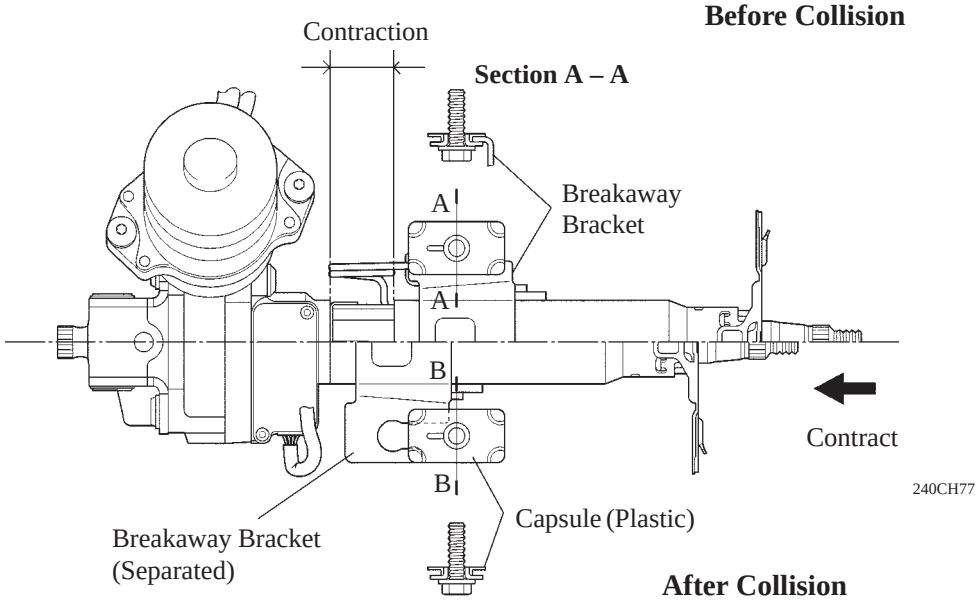

Section B – B

After Collision
(Maximum Contraction)

CH

– MEMO –

ENGINE

1ZZ-FE AND 3ZZ-FE ENGINE

■ DESCRIPTION

These engines, which use the VVT-i (Variable Valve Timing-intelligent) system, DIS (Direct Ignition System), and a plastic intake manifold, excel in performance and fuel economy

- The 1ZZ-FE engine is an in-line 4-cylinder, 1.8-liters, 16-valve DOHC engine.
- The 3ZZ-FE engine is an in-line 4-cylinder, 1.6-liters, 16-valve DOHC engine.

For the main changes made to these engines from the previous model, see page EG-5.

▶ 1ZZ-FE Engine ◀

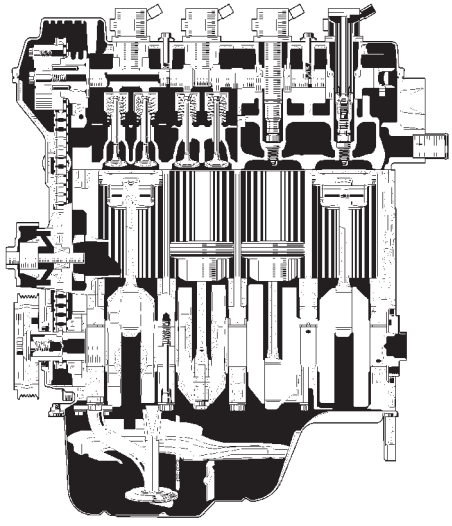

174EG01

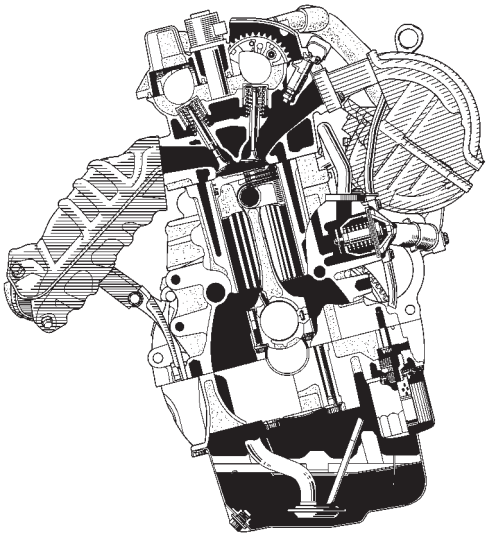

240EG114

▶ 3ZZ-FE Engine ◀

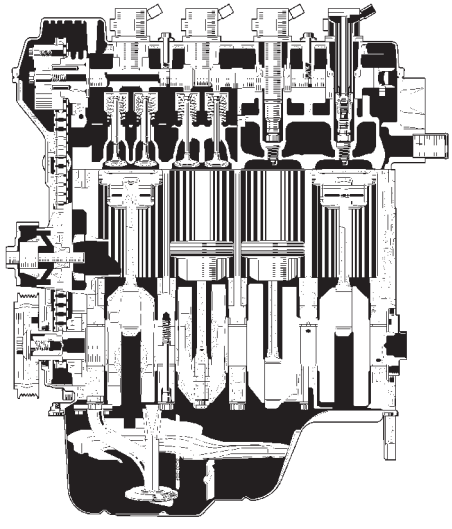

174EG01

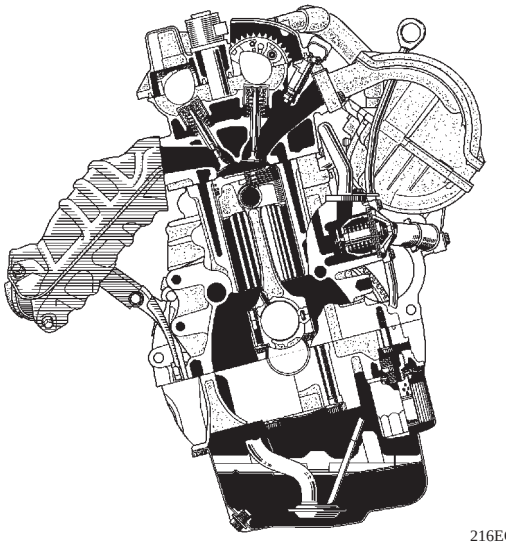

216EG19

▶ Engine Specification ◀

Engine			1ZZ-FE	
Model			New	Previous
No. of Cyls. & Arrangement			4-Cylinder, In-line	←
Valve Mechanism			16-Valve DOHC, Chain Drive (with VVT-i)	←
Combustion Chamber			Pentroof Type	←
Manifolds			Cross-Flow	←
Fuel System			EFI	←
Displacement	cm^3 (cu. in.)		1794 (109.5)	←
Bore x Stroke	mm (in.)		79.0 x 91.5 (3.11 x 3.60)	←
Compression Ratio			10.0 : 1	←
Max. Output	[EEC]		95.0 kW @ 6000 rpm	←
Max. Torque	[EEC]		170 N·m @ 4200 rpm	←
Valve Timing	Intake	Open	2° ~ 42° BTDC	←
		Close	50° ~ 10° ABDC	←
	Exhaust	Open	42° BBDC	←
		Close	2° ATDC	←
Firing Order			1 – 3 – 4 – 2	←
Research Octane Number			95 or higher	←
Oil Grade			API SL,EC or ILSAC	←
Emission Regulation			European STEP IV and European Cold Emission	European STEP III
Engine Service Mass* (Reference)		M/T	120 (264.6)	106 (233.7)
kg (lb)		A/T	112 (246.9)	98 (216.0)

*: Weight shows the figure with oil and water fully filled.

▶ Performance Curve ◀

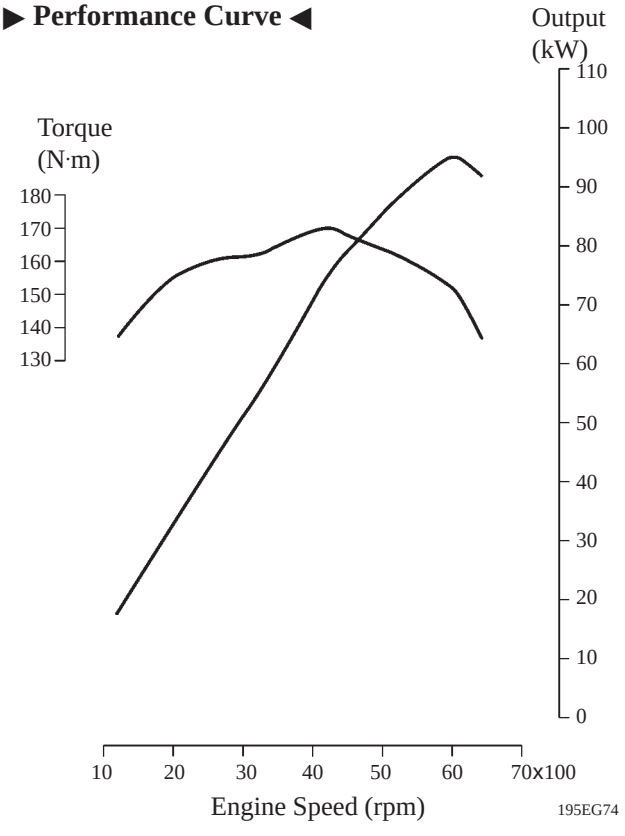

▶ Valve Timing ◀

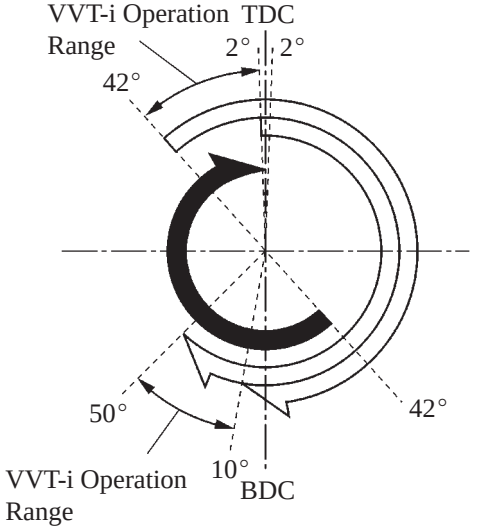

EG

▶ Engine Specification ◀

Engine			3ZZ-FE	
Model			New	Previous
No. of Cyls. & Arrangement			4-Cylinder, In-line	←
Valve Mechanism			16-Valve DOHC, Chain Drive (with VVT-i)	←
Combustion Chamber			Pentroof Type	←
Manifolds			Cross-Flow	←
Fuel System			EFI	←
Displacement	cm^3 (cu. in.)		1598 (97.5)	←
Bore x Stroke	mm (in.)		79.0 x 81.5 (3.11 x 3.21)	←
Compression Ratio			10.5 : 1	←
Max. Output	[EEC]		81.0 kW @ 6000 rpm	←
Max. Torque	[EEC]		150 N·m @ 3800 rpm	←
Valve Timing	Intake	Open	2° ~ 42° BTDC	←
		Close	50° ~ 10° ABDC	←
	Exhaust	Open	42° BBDC	←
		Close	2° ATDC	←
Firing Order			1 – 3 – 4 – 2	←
Research Octane Number			95 or higher	←
Oil Grade			API SL,EC or ILSAC	←
Emission Regulation			European STEP IV and European Cold Emission	European STEP III
Engine Service Mass* (Reference)	kg (lb)		113 (249.1)	107 (235.9)

*: Weight shows the figure with oil and water fully filled.

▶ Performance Curve ◀

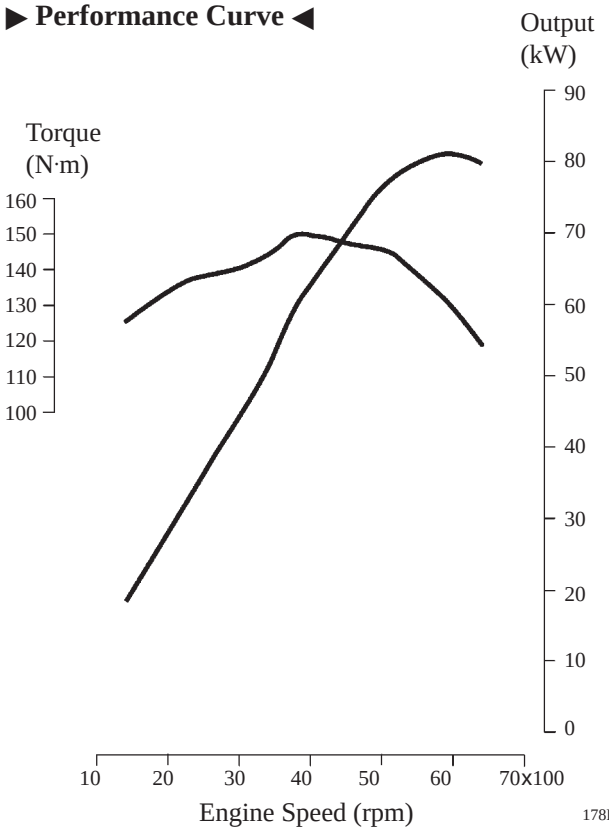

178EG03

▶ Valve Timing ◀

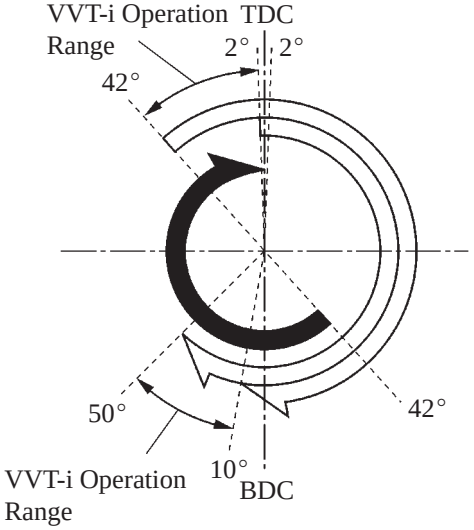

221EG21

■ MAJOR DIFFERENCE (from Previous Model)

Item	Outline	Engine	
		1ZZ-FE	3ZZ-FE
Lubrication System (See page EG-13)	A service hole for changing the engine oil and replacing the oil filter are provided in the engine under cover.	○	○
Cooling System (See page EG-15)	A single fan is used for both air conditioner and cooling.	○	○
Intake and Exhaust System (See page EG-18)	● The heat insulator for the exhaust manifold has been changed. ● The material of the air cleaner case clamps has been changed.	○	○
	The TWC (Three-Way Catalytic Converter) has been integrated in the exhaust manifold.	—	○
	A resonator has been provided in the air intake pipe.	○	—
Fuel System (See page EG-20)	Plastic made fuel tank has been adopted.	○	○
Starting System (See page EG-23)	The planetary reduction type starter with the interpolar magnet has been adopted.	○	○
Engine Control System (See page EG-26)	● Adoption of 32-bit Engine ECU. ● Change of the knock sensor structure. ● Adoption of the cooling fan control.	○	○

■FEATURES OF 1ZZ-FE AND 3ZZ-FE ENGINE

The 1ZZ-FE and 3ZZ-FE engine have been able to achieve the following performance through the adoption of the items listed below.

(1) High performance and fuel economy

(2) Low noise and vibration

(3) Lightweight and compact design

(4) Good serviceability

(5) Clean emission

Item		(1)	(2)	(3)	(4)	(5)	Engine	
							1ZZ-FE	3ZZ-FE
Engine Proper	A cylinder block made of aluminum alloy is used.			○			○	○
	A timing chain and chain tensioner are used.		○		○		○	○
	The VVT-i system is used.	○				○	○	○
Intake and Exhaust System	Intake manifold made of plastic is used.			○			○	○
	A stainless steel exhaust manifold is used.			○			○	○
	A rearward exhaust layout is used to realize an early activation of the TWC (Three-Way Catalytic Converter).					○	○	○
	The TWC has been added on the exhaust manifold.					○	○	○
	A thin-wall ceramic TWC has been adopted.					○	○	○
Fuel System	The fuel returnless system is used.			○	○	○	○	○
	Plastic made fuel Tank has been adopted.			○			○	○
	Quick connectors are used to connect the fuel hose with the fuel pipe.				○		○	○
Ignition System	The DIS (Direct Ignition System) makes ignition timing adjustment unnecessary.				○		○	○
Starting System	The planetary reduction type starter with the interpolar magnet has been adopted.			○			○	○

■ENGINE PROPER

1. Cylinder Head Cover

- Lightweight yet high-strength aluminum die-cast cylinder head cover uses.
- Acrylic rubber, which excels in heat resistance and reliability, uses for the cylinder head cover gasket.

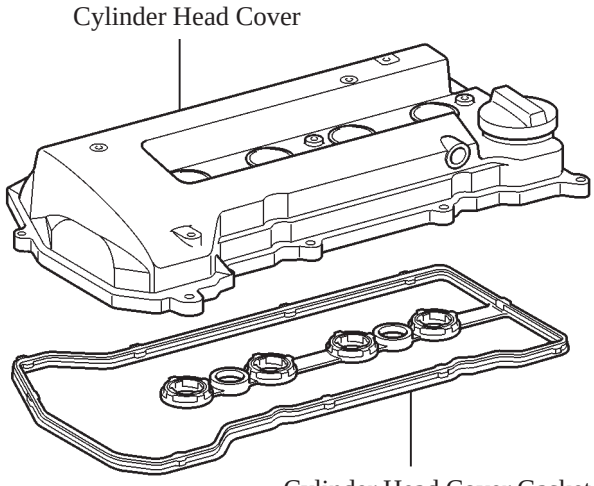

2. Cylinder Head

- Upright intake ports used to increase intake efficiency.
- The routing of the water jacket in the cylinder head has been optimized to achieve higher cooling performance. In addition, a water bypass passage has been provided below the intake ports to reduce the number of parts and to reduce weight.
- Through the use of the taper squish combustion chamber, the engine's knocking resistance and fuel efficiency have been improved.

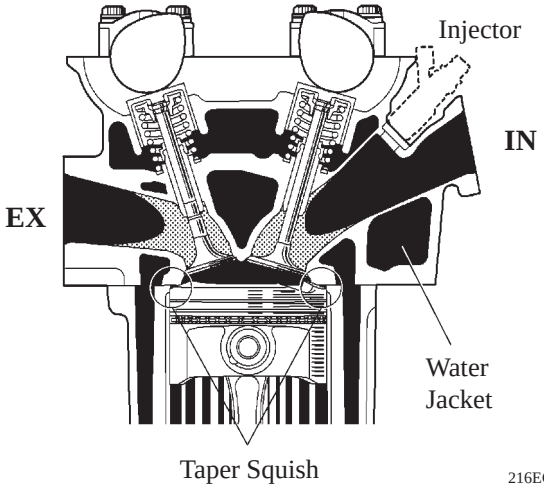

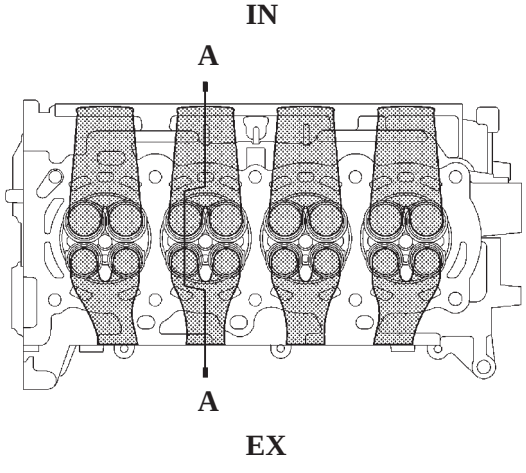

A – A Cross Section

3. Cylinder Block

- Lightweight aluminum alloy is use for the cylinder block.
- The crankshaft bearing caps with ladder-frame construction are use to increase the rigidity, to reduce noise, and to increase the coupling rigidity with the transaxle.
- Cast-iron is used as a material for part of the bearing journal of the crankshaft bearing cap and thus help prevent heat deformation. In addition, the oil filter bracket, the air conditioning compressor bracket, the water pump swirl chamber, the thermostat housing and the rear oil seal retainer have been integrated to reduce the number of parts.

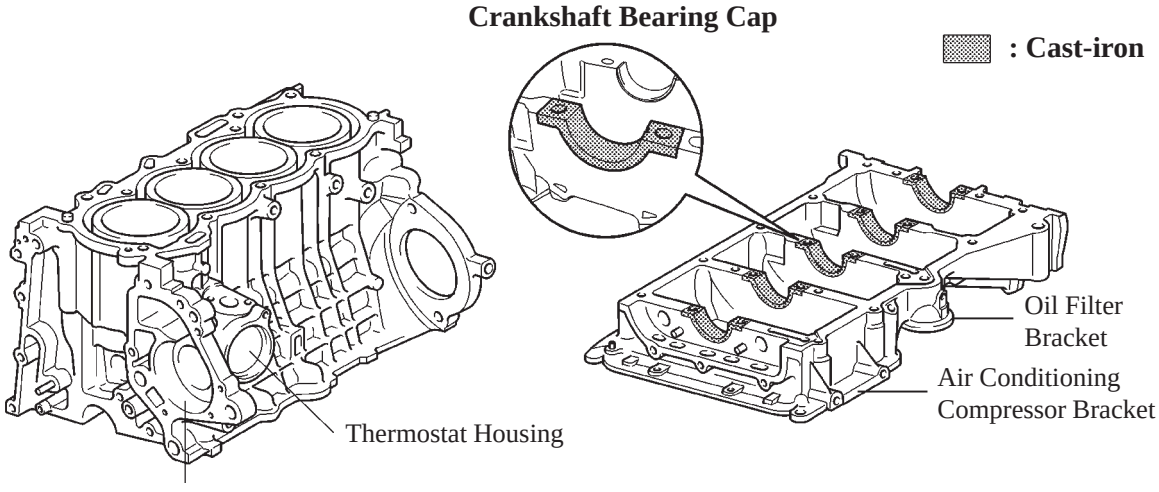

Ladder-frame Construction 222EG20

- Passage holes are provided in the crankshaft bearing area of the cylinder block. As a result, the air at the bottom of the cylinder flows smoother, and pumping loss (back pressure at the bottom of the piston generated by the piston's reciprocal movement) is reduced to improve the engine's output.

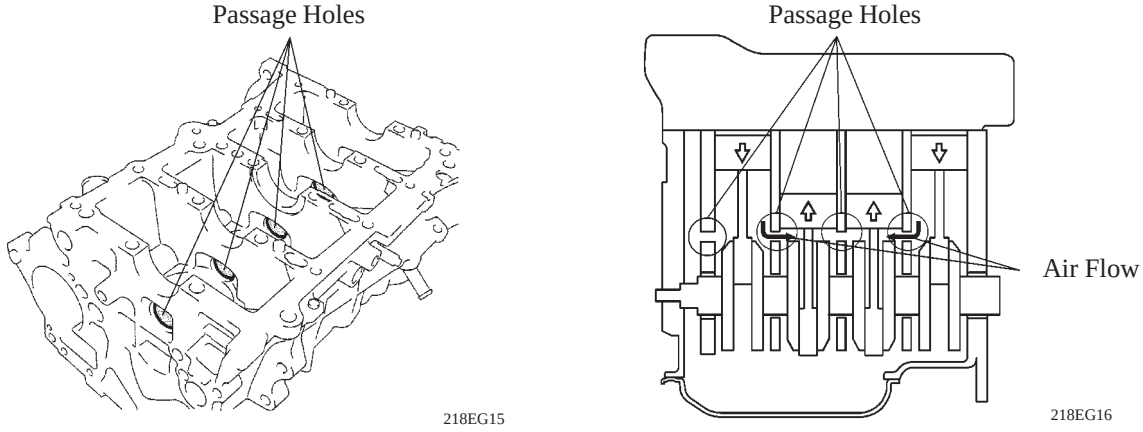

Air Flow During Engine Revolution

- A thin cast-iron liner is press-fitted inside the cylinder to ensure an added reliability.

NOTICE

Never attempt to machine the cylinder because it has a thin liner thickness.

4. Piston

- The piston is made of aluminum alloy to be compact and lightweight.
- The piston head portion uses a taper squish shape to accomplish fuel combustion efficiency.
- Full floating type piston pins are used.
- By increasing the machining precision of the cylinder bore diameter, only one size of piston is available.

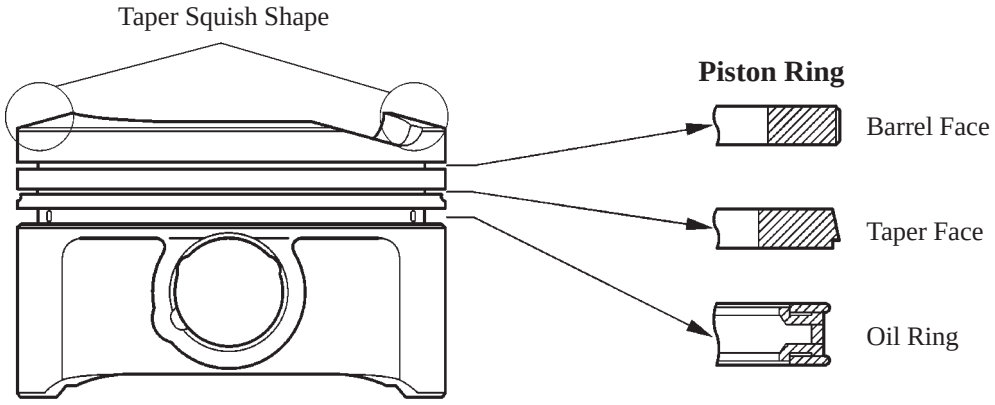

221EG29

5. Connecting Rod

- The connecting rods are made of high-strength vanadium steel for weight reduction.
- The connecting rod bearings have been reduced in width to reduce friction.
- Nutless-type plastic region tightening bolts are used for a lighter design.

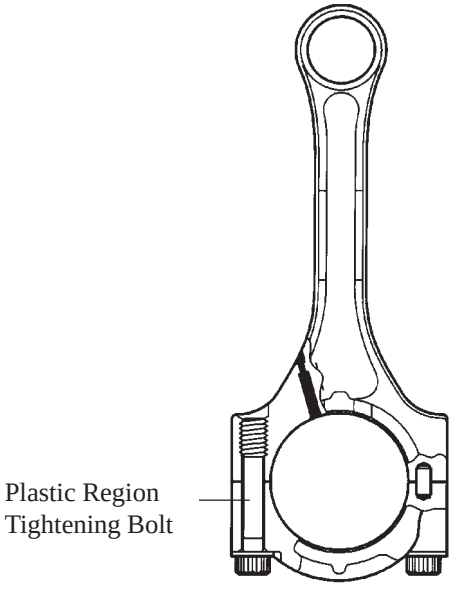

178EG29

6. Crankshaft

- The forged crankshaft (for 1ZZ-FE engine) has 5 journals and 8 balance weights.
- The casting crankshaft (for 3ZZ-FE engine) has 5 journals and 4 balance weights.
- The crankshaft bearings have been reduced in width to reduce friction.
- The pins and journals have been machined with increased precision and the surface roughness minimizes to reduce friction.

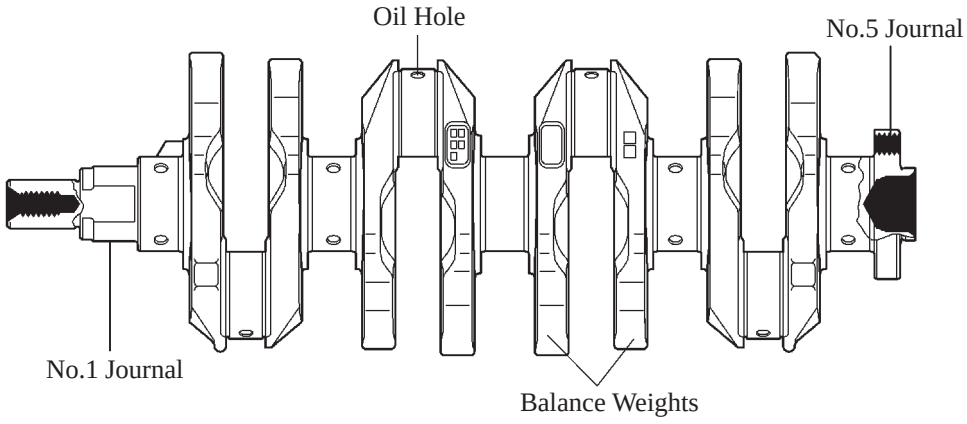

For 1ZZ-FE Engine

216EG38

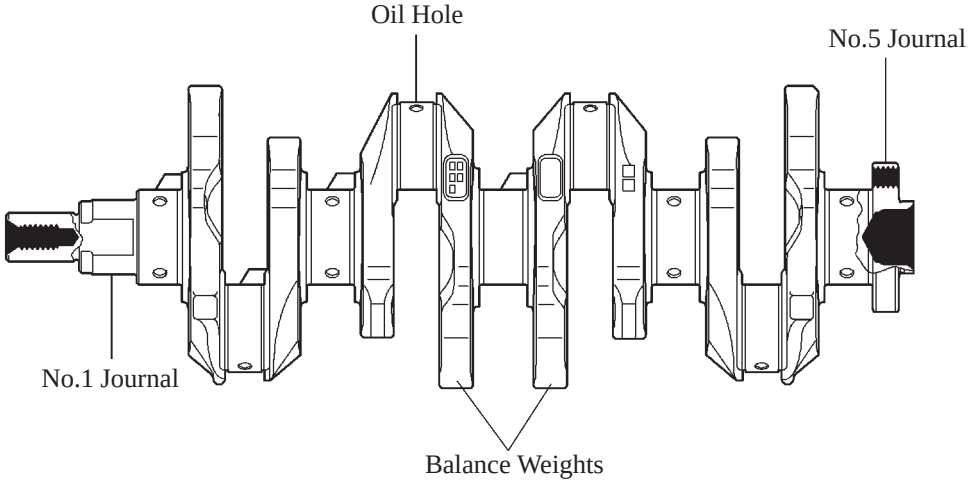

For 3ZZ-FE Engine

240EG53

■VALVE MECHANISM

1. General

- Along with the increase in the amount of valve lift, the shimless type of valve lifter is used. This valve lifter increases the cam contact surface.
- The VVT-i system is used to achieve low fuel consumption, higher engine performance and reduce exhaust emissions. For details of VVT-i control, refer to page EG-37.

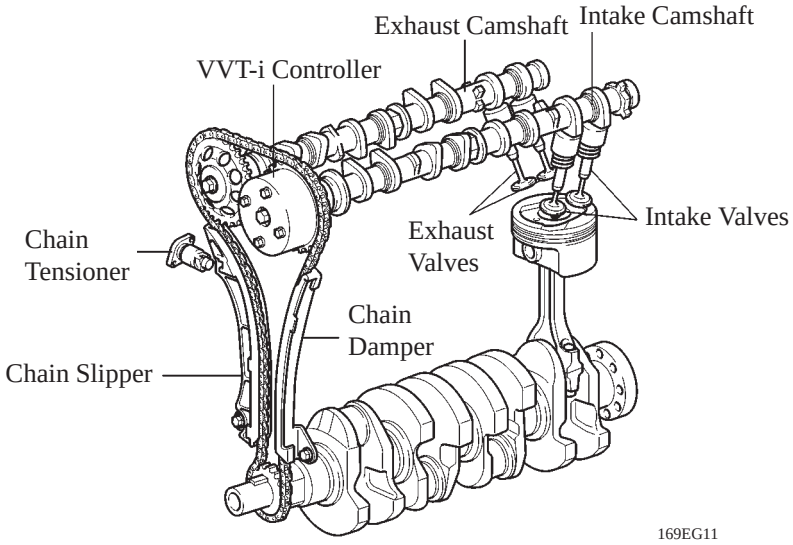

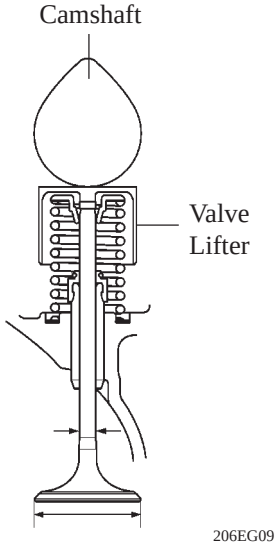

Service Tip

The adjustment of the valve clearance is accomplished by selecting and replacing the appropriate valve lifters. Adjusting valve lifters are available in 35 increments of 0.020 mm (0.0008 in.), from 5.060 mm (0.1992 in.) to 5.740 mm (0.2260 in.).
For details, refer to the Avensis Repair Manual (Pub. No. RM1018E).

2. Camshaft

- An oil passage is provided in the intake camshaft in order to supply engine oil pressure to the VVT-i system.
- A VVT-i controller has been installed on the front of the intake camshaft to vary the timing of the intake valves.

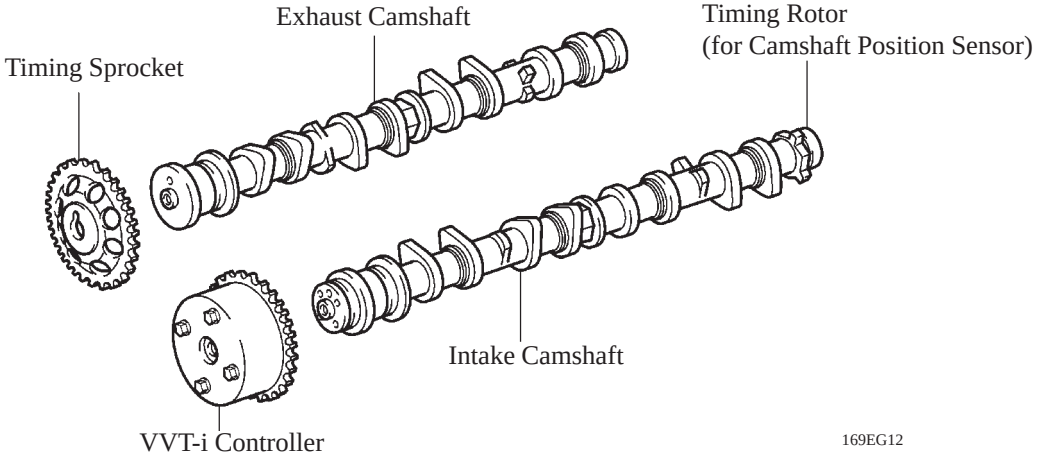

3. Timing Chain and Chain Tensioner

- A roller chain with an 8 mm pitch is used to make the engine more compact.
- The timing chain is lubricated by an oil jet.
- The chain tensioner uses a spring and oil pressure to maintain proper chain tension at all times. The chain tensioner suppresses noise generated by the timing chain.
- A ratchet type non-return mechanism is used.
- To achieve excellent serviceability, the chain tensioner is constructed so that it can be removed and installed from the outside of the timing chain cover.

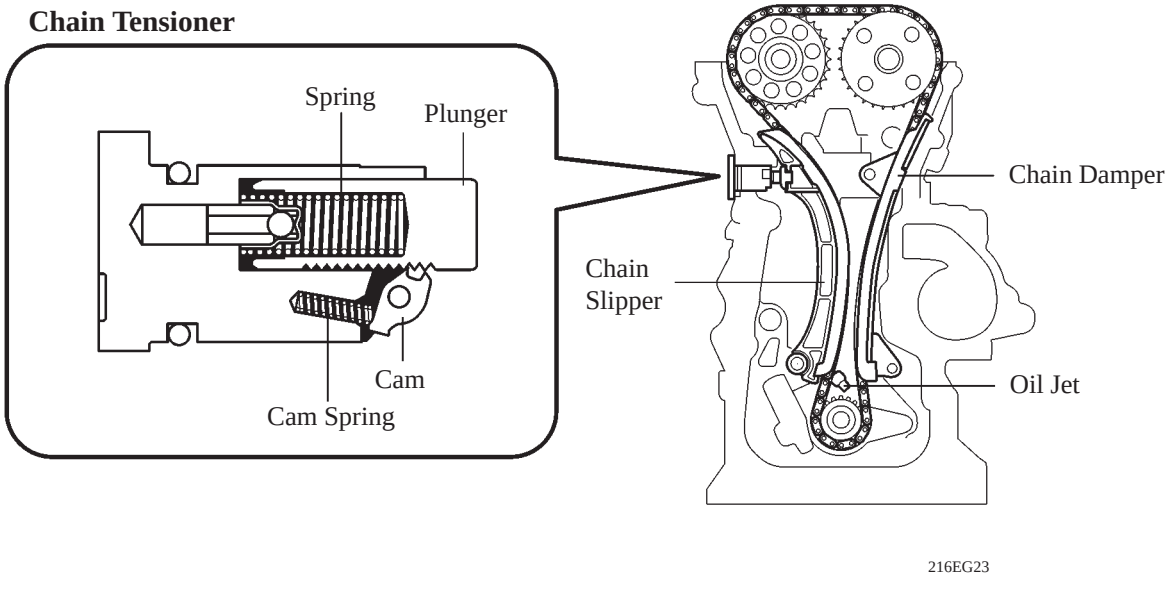

■LUBRICATION SYSTEM

- The lubrication circuit is fully pressurized and oil passes through an oil filter.
- The cycloid gear type oil pump is driven directly by the crankshaft.
- These engines have an oil return system in which the oil is force-fed to the upper cylinder head and returns to the oil pan through the oil return hole in the cylinder head.
- The oil filter is attached downward from the crankshaft bearing cap to realize serviceability.
- The cylinder head is provided with a VVT-i controller and a camshaft timing oil control valve. This system is operated by the engine oil pressure.

— Change (from Previous Model) —

To improve serviceability, a service hole for changing the engine oil and replacing the oil filter are provided in the engine under cover.

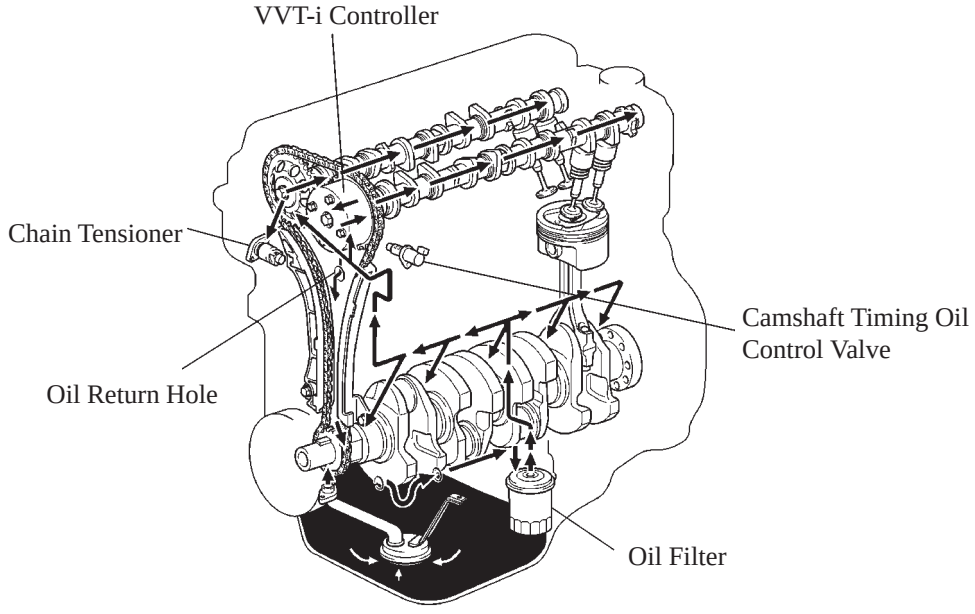

185EG34

▶ Engine Under Cover ◀

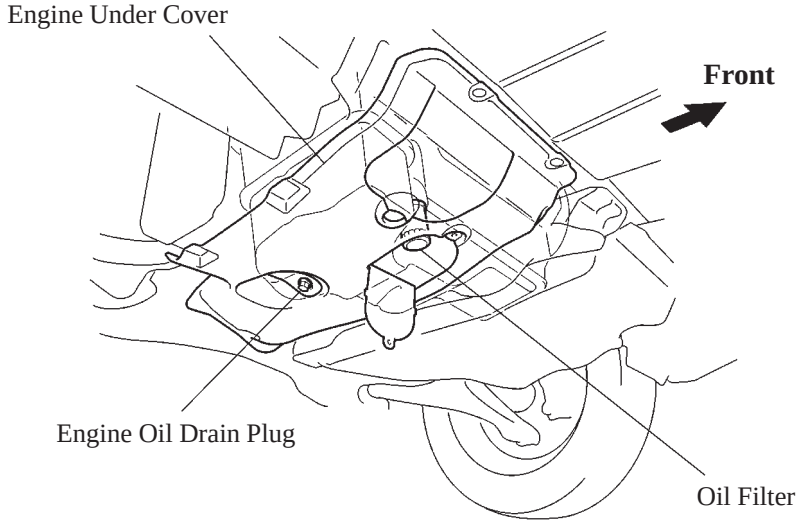

240EG55

▶ Oil Capacity ◀ liters (US qts, Imp. qts)

Engine	1ZZ-FE and 3ZZ-FE
Dry	4.2 (4.4, 3.7)
with Oil Filter	3.7 (3.9, 3.3)
without Oil Filter	3.5 (3.7, 3.1)

▶ Oil Circuit ◀

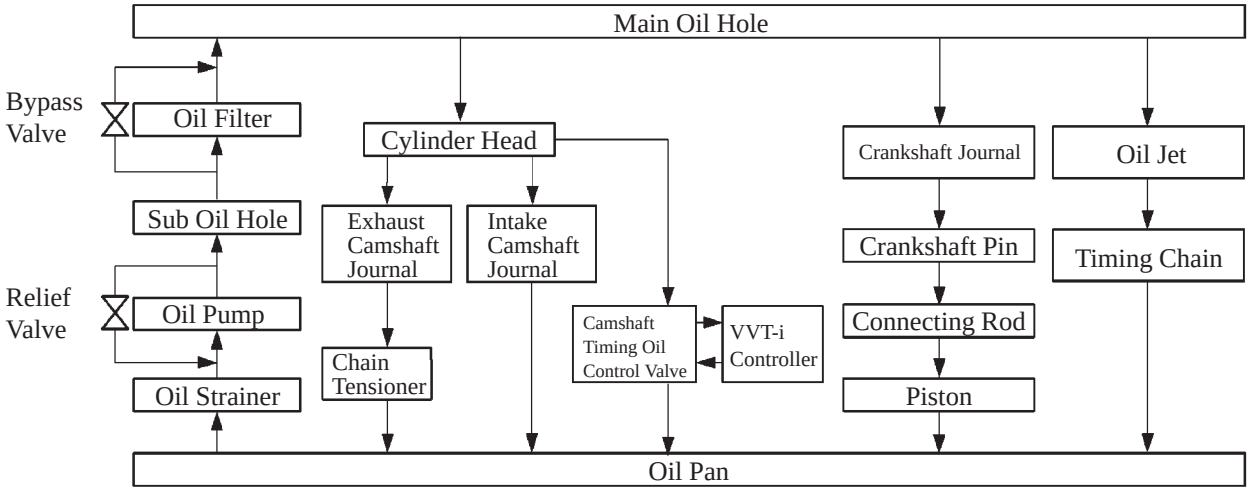

216EG40

■COOLING SYSTEM

1. General

- The cooling system is a pressurized, forced-circulation type.
- A thermostat with a bypass valve is located in the water inlet housing to maintain a suitable temperature in the cooling system.
- An aluminum radiator core is used for weight reduction.
- The flow of the water makes a U-turn in the cylinder block to ensure a smooth flow. In addition, a bypass passage is enclosed in the cylinder head and the cylinder block.
- Warm water from the cylinder head is sent to the throttle body to prevent freeze-up.

— Change (from Previous Model) —

A single cooling fan is used for both the cooling and air conditioner systems.

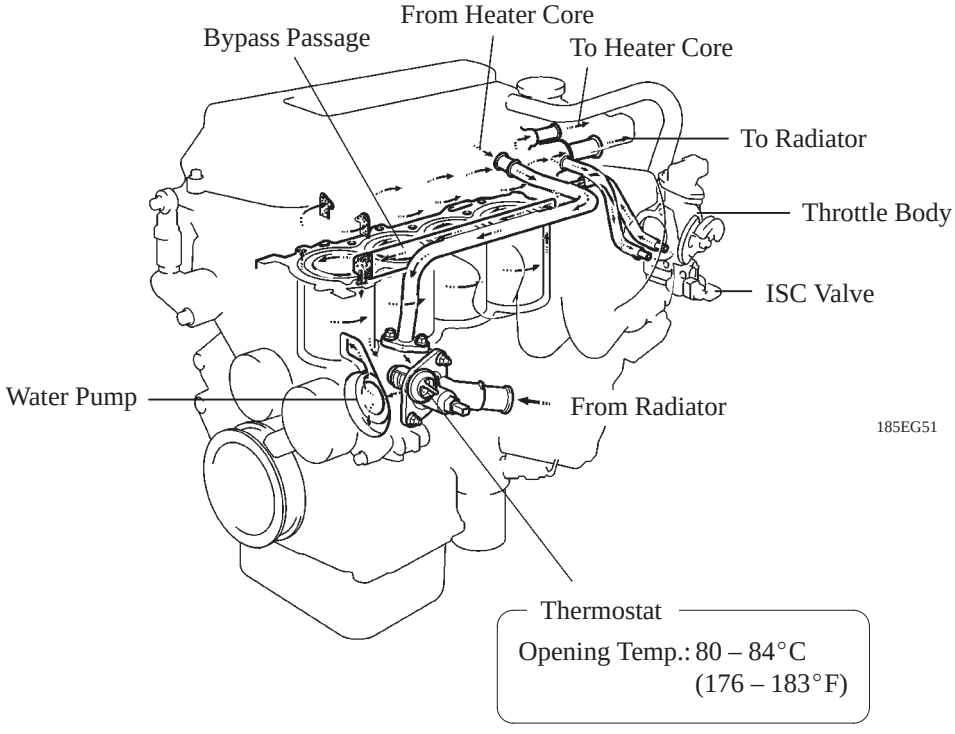

▶ Specification ◀

Engine	1ZZ-FE Engine			3ZZ-FE Engine	
Capacity liters (US qts, Imp. qts)	LHD	MT	5.8 (6.1, 5.1)	LHD	5.8 (6.1, 5.1)
		AT	5.7 (6.0, 5.0)	LHD	5.8 (6.1, 5.1)
	RHD	MT	5.9 (6.2, 5.2)	RHD	5.9 (6.2, 5.2)
		AT	5.8 (6.1, 5.1)	RHD	5.9 (6.2, 5.2)
Type	TOYOTA Genuine Super Long Life Coolant or equivalent				

▶Water Circuit◀

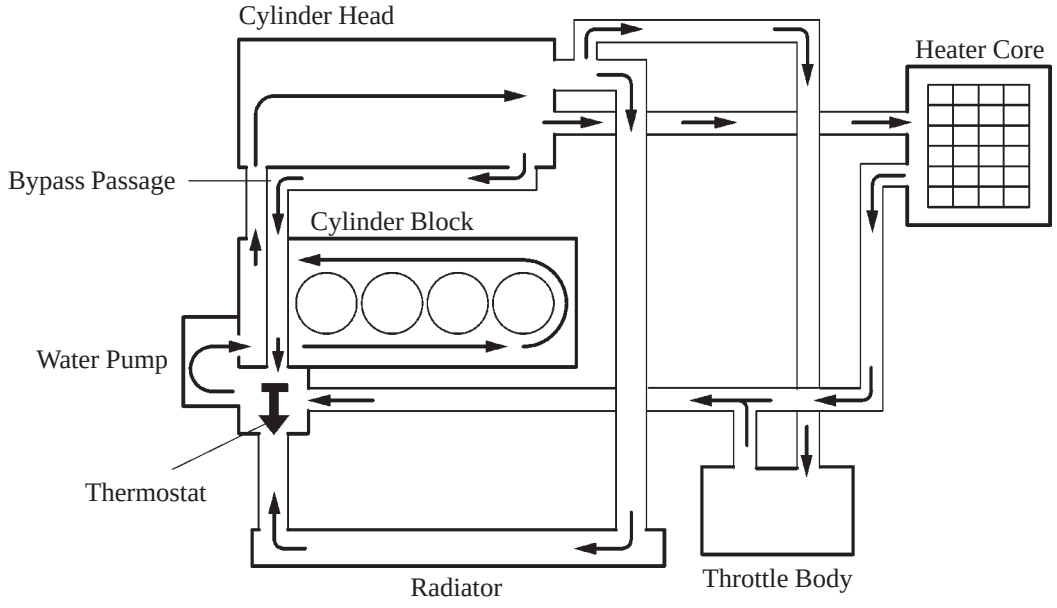

148EG07

2. Electronic Cooling Fan

- The size of the electronic cooling fan has been increased. Thus, a single fan is used both for A/C and for cooling the radiator, resulting in fewer parts. For details of cooling fan control, refer to see page EG-42.
- The direction of the fan rotation has been changed to clockwise (as seen from behind the vehicle) to reduce the intake air temperature.
- The reservoir tank and the fan shroud have been composite-formed for an effective use of space, to reduce weight, and to reduce the number of parts.

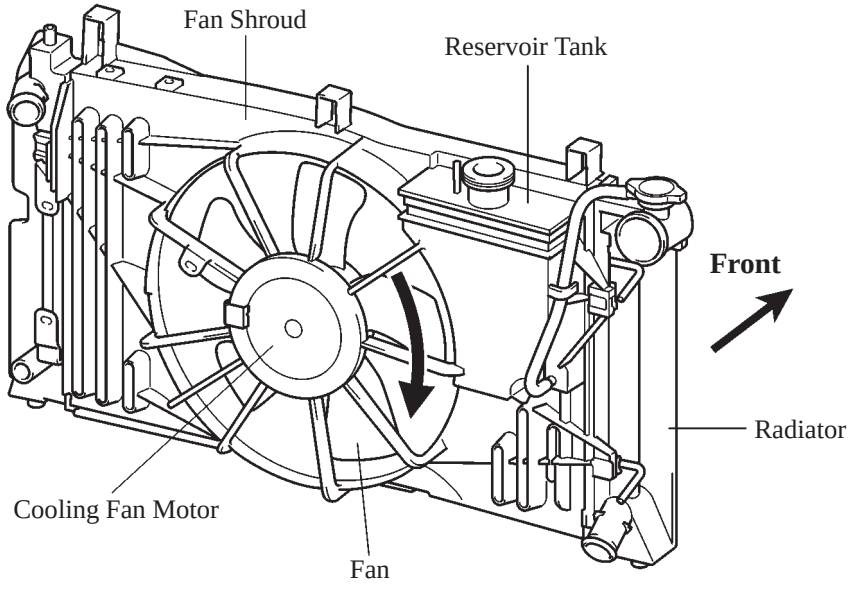

240EG05

— Reference —

When the cooling fan rotates counterclockwise, airflow is created near the air inlet particularly at low speeds, which blocks the entry of fresh air.
To prevent this from occurring, the direction of the fan has been changed to clockwise. This creates an airflow that is directed to the opposite side of the air inlet. As a result,the area near the air inlet is less affected by the hot air, thus making it easier to bring in fresh air.

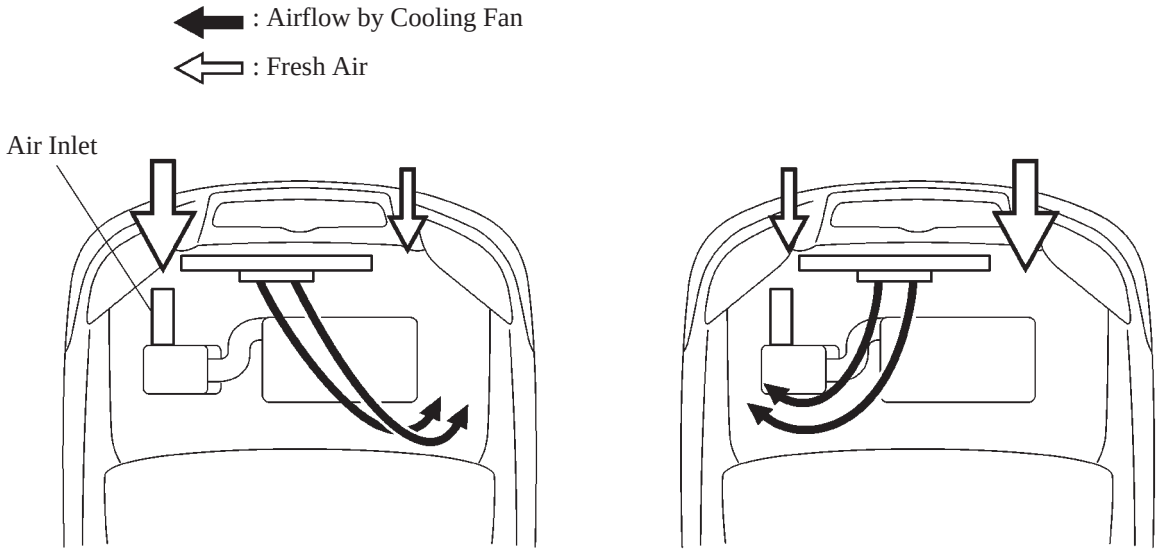

Clockwise (New Model) **Counterclockwise (Previous Model)**

240EG57

■INTAKE AND EXHAUST SYSTEM

1. General

- The intake manifold has been made of plastic to reduce the weight and the amount of heat transferred from the cylinder head. As a result, it has become possible to reduce the intake air temperature and improve the intake volumetric efficiency.
- A resonator is installed inside the air intake chamber to optimize the intake pulsation in order to realize the engine performance in the mid-speed range.
- A stainless steel exhaust manifold is used for weight reduction.
- A ball joint is used to joint the exhaust manifold to the exhaust front pipe, and the exhaust front pipe to the exhaust tail pipe. As a result, a simple construction and improved reliability have been resulted.
- In the 3ZZ-FE engine, a throttle body mesh is used between the throttle body and the intake manifold to improve the flow of air within the intake manifold.

— Change (from Previous Model) —

- A resonator has been added to reduce intake noise (only for the 1ZZ-FE engine).
- A TWC (Three-Way Catalytic Converter) has been integrated in the exhaust manifold.
- The material of the air cleaner case clamps has been changed from the metal to the plastic. As a result, recyclability has been improved.

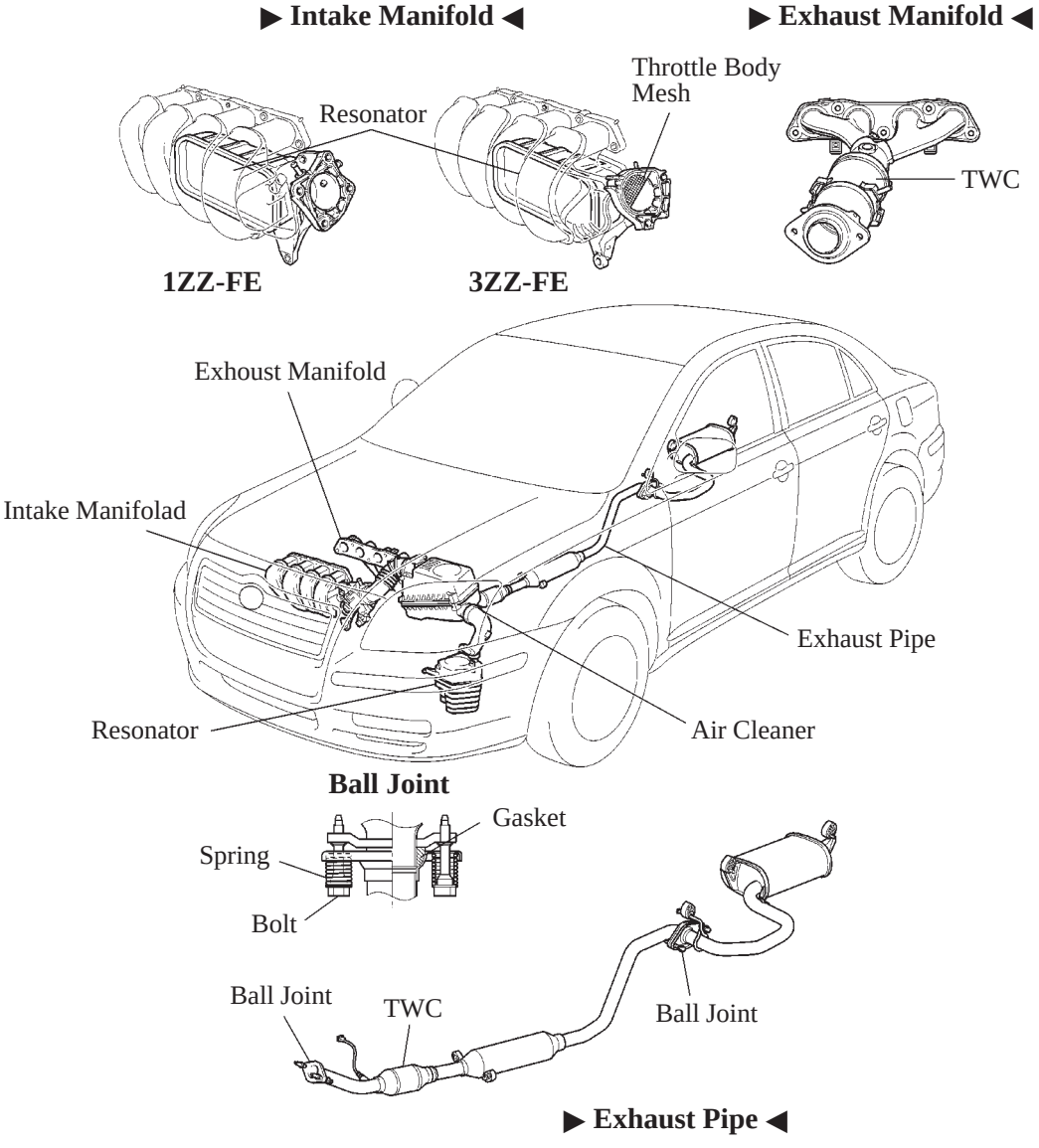

240EG70

Service Tip

Remove the air cleaner cap in the following sequence:
1. Lift the clamp.
2. Move the clamp to the forward.
3. Remove the air cleaner cap.

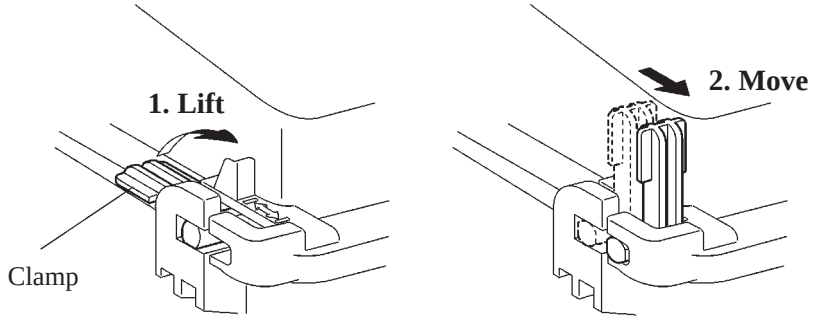

4. Exhaust Manifold

- This exhaust manifold is constructed of shorter branches and a dual-pipe convergence area to enable the TWC (Three-Way Catalytic Converter) to achieve a higher warm-up performance.
- This heat insulator contains holes that facilitate the flow of the cooling air, which acts as a radiation temperature countermeasure and ensure exhaust manifold cooling performance.
- An ultra thin-wall, high-cell density ceramic type TWC has been adopted in the exhaust manifold. This has significantly improved the warm-up performance to comply with the European STEP IV and European Cold Emission regulations.

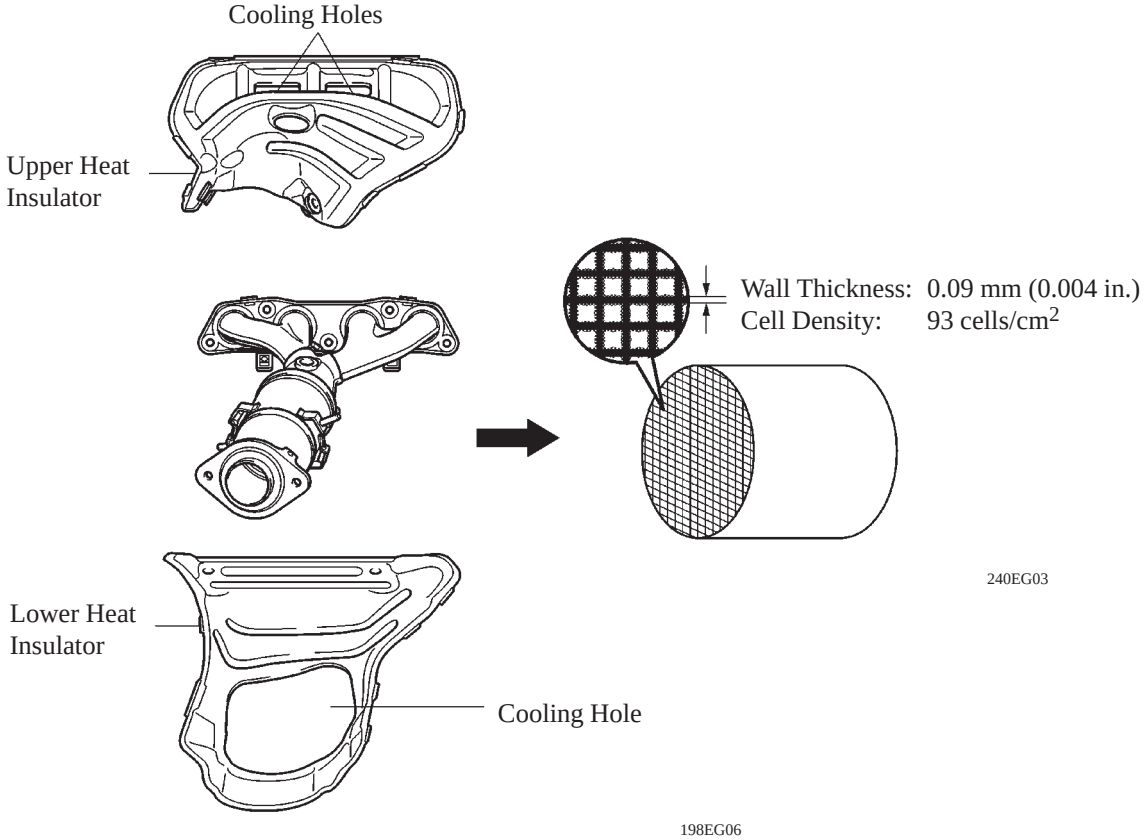

■FUEL SYSTEM

1. General

- A fuel returnless system is used to reduce evaporative emissions.
- A fuel cut control is used to stop the fuel pump when the SRS airbag is deployed in a front or side collision. For details, see page EG-41.
- A quick connector is used to connect the fuel pipe with the fuel hose for excellent serviceability.
- A compact fuel pump in which the fuel filter, pressure regulator, fuel sender gauge, and fuel cutoff valve are all integrated in the fuel pump assembly is used.
- The 1ZZ-FE engine uses compact, 12-hole type injectors, and the 3ZZ-FE engine uses4-hole type injectors to increase the atomization of fuel.

— *Change (from Previous Model)* —

- To improve rust resistance, the material of the fuel tank has been changed from metal to plastic. This eliminates plating, as well as the use of lead, in consideration of the environment.
- The fuel pump designed for plastic fuel tank has been adopted. It is compact type with integrated fuel filter, pressure regulator, fuel sender gauge and fuel cutoff valve.

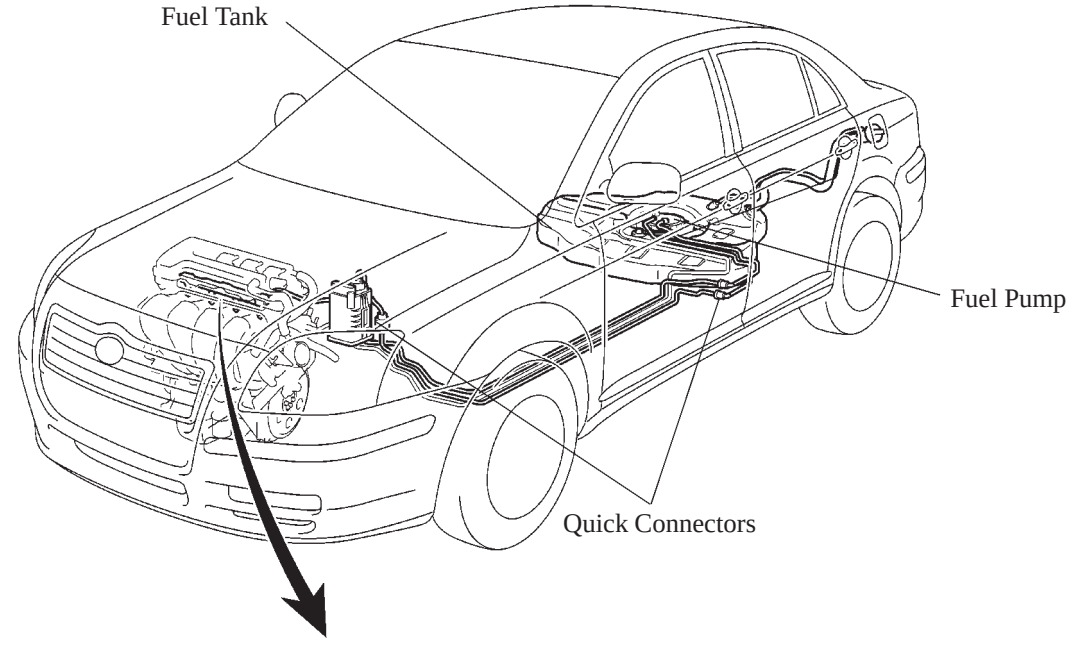

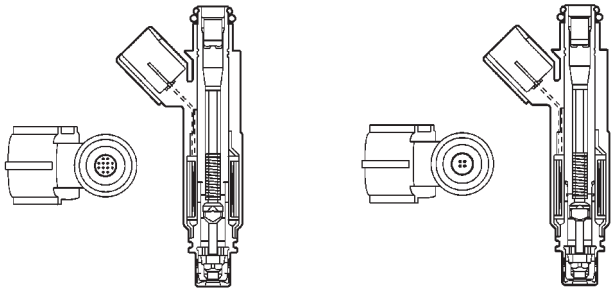

240EG06

For 1ZZ-FE engine **For 3ZZ-FE engine**

▶ Specification of Fuel Tank ◀

Model		New	Previous
Weight	kg (lb)	9.6 (21.2)	13.6 (30.0)
Fuel Capacity	liters (US qts, Imp.qts)	60 (63.4, 52.8)	←

2. Fuel Returnless System

This system has been adopted to reduce the evaporative emission. As show below, integrating the fuel filter, pressure regulator, and fuel sender gauge with fuel pump assembly it possible to discontinue the return of fuel from the engine area and prevent temperature riseinside the fuel tank.

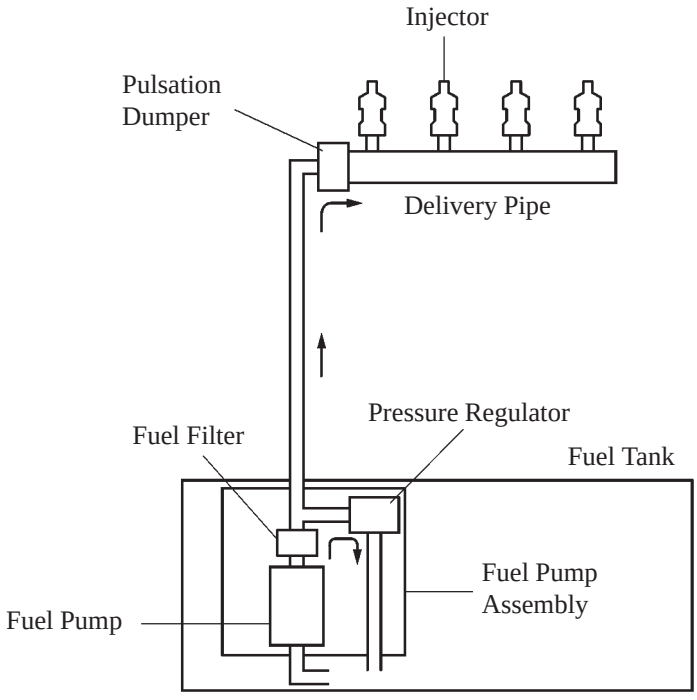

185EG16

3. Fuel Pump Assembly

Plastic made fuel tanks can be deformed due to temperature or inside pressure fluctuation. Thus this fuel pump is pressed down by the spring to the bottom of fuel tank to help assure the precision of fuel sender gauge and realize fuel pump performance.

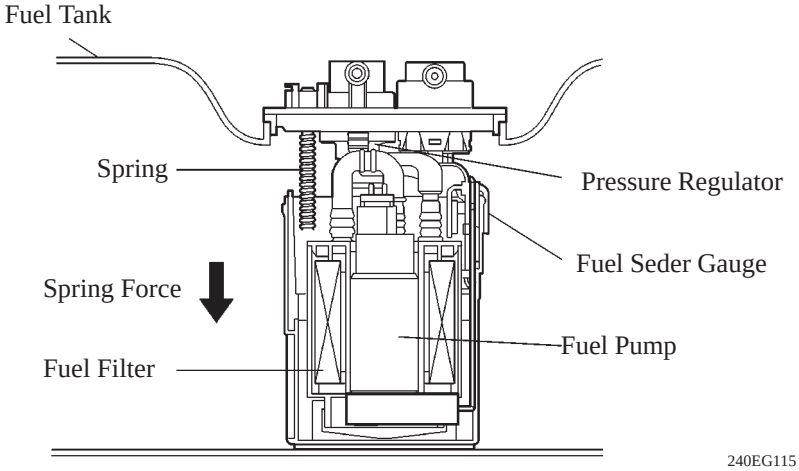

240EG115

■IGNITION SYSTEM

- A DIS (Direct Ignition System) is used. The DIS improves the ignition timing accuracy, reduces high-voltage loss, and enhances the overall reliability of the ignition system by eliminating the distributor. The DIS is an independent ignition system, which has one ignition coil (with igniter) for each cylinder.
- The spark plug caps, which connect to the spark plugs, are integrated with the ignition coil. Also, the igniter is enclosed to simplify the system.

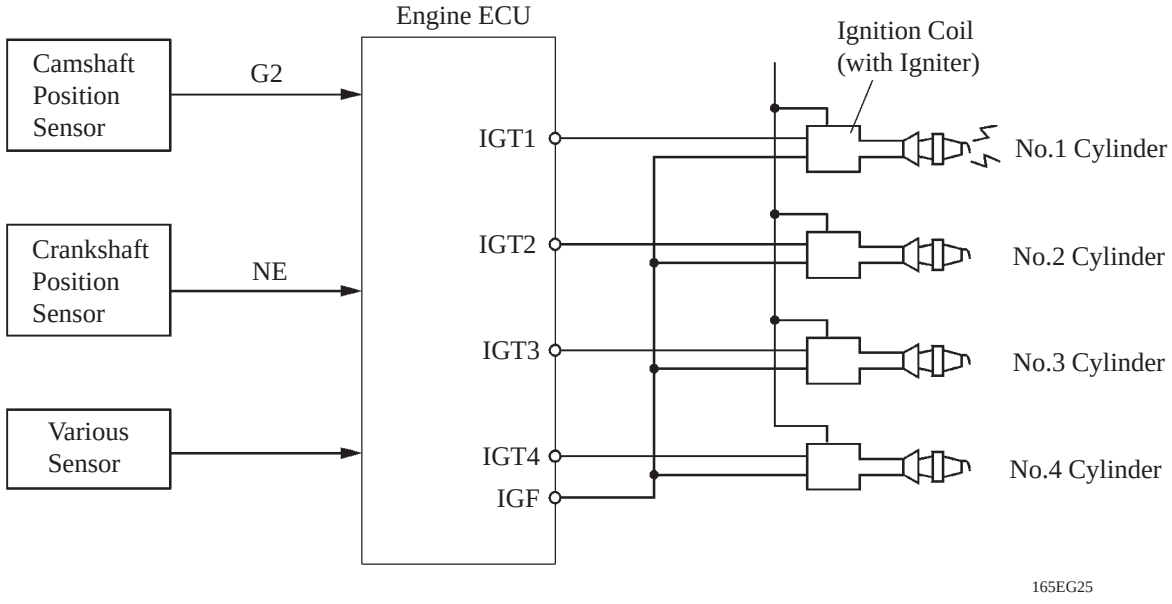

■STARTING SYSTEM

Starter

1. General

- In place of the field coil used in the conventional starter, the planetary reduction type sterter with the interpolar magnet is adopted.
- The interpolar magnet has been efficiently arranged to increase the magnetic flux and to shorten the length of the yoke.

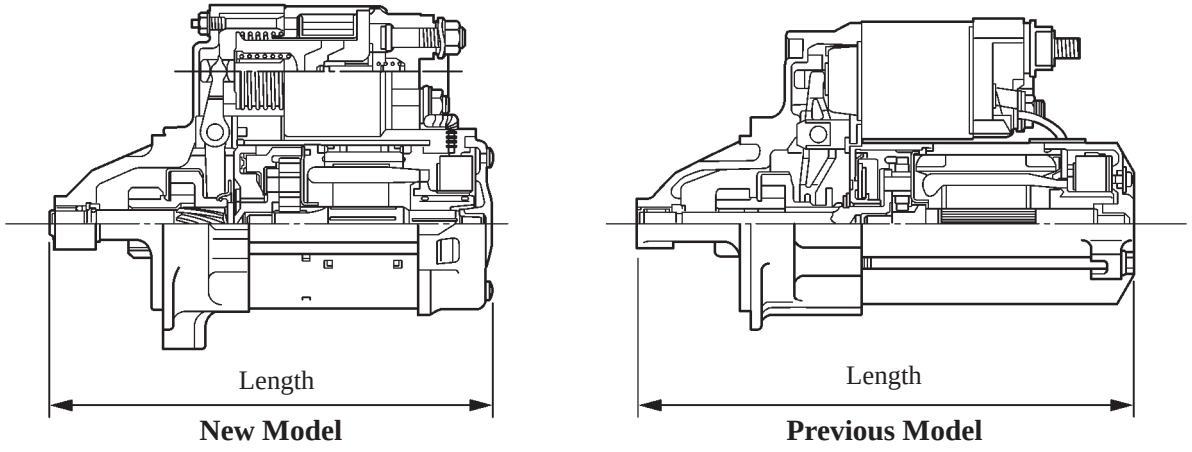

New Model **Previous Model**

240EG08

▶ Specification ◀

Type (Model)	New Model	Previous Model
Length	187 mm (7.36 in)	211 mm (8.31 in)
Weight g (lb)	2700 (6.00)	3150 (6.94)
Rating Voltage	12 V	12 V
Rating Output	1.3 kW	1.0 kW
Rotating of Direction	Clockwise*	Clockwise*

*: Viewed from Pinion Side

Instead of the field coils used in the conventional type starter, this starter has adopted two types of permanent magnets: the main magnets and the interpolar magnets. The main and interpolar magnets are arranged alternately inside the yoke, allowing the magnetic flux that is generated between the main and interpolar magnets to be added to the magnetic flux that is generated by the main magnets.
In addition to increasing the amount of magnetic flux, this construction shortens the overall length of the yoke.

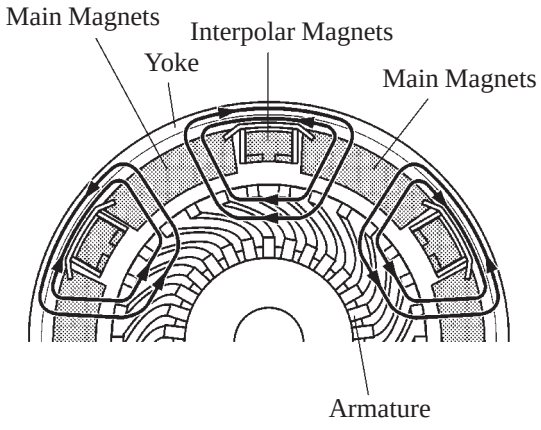

Cross Section of Yoke

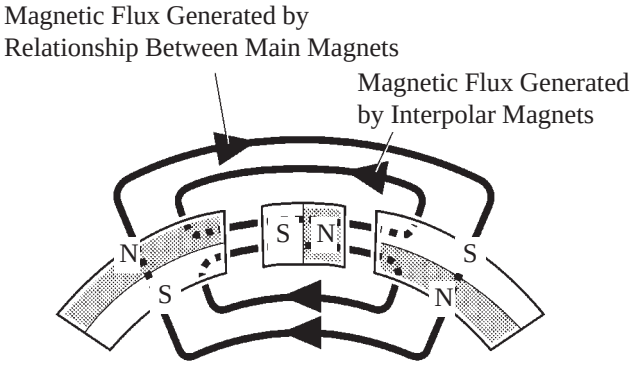

222EG15

■SERPENTINE BELT DRIVE SYSTEM

- Accessory components are driven by a serpentine belt consisting of a single V-ribbed belt. It reduces the overall engine length, weight and number of engine parts.
- An automatic tensioner eliminates the need for tension adjustment.

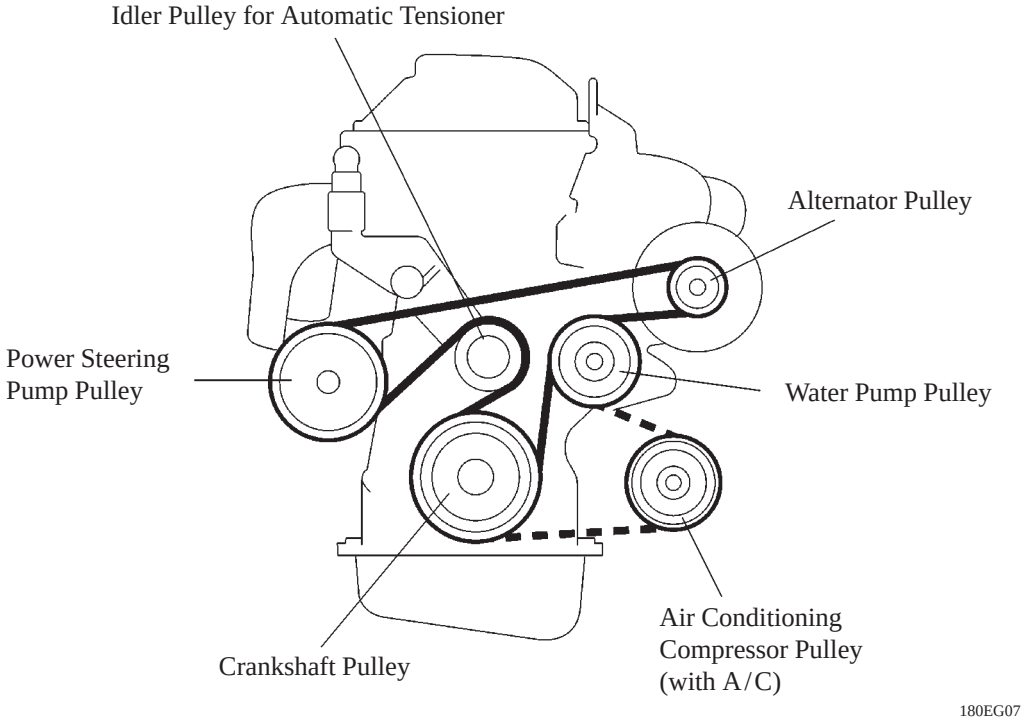

■ENGINE CONTROL SYSTEM

1. General

The engine control system for the 1ZZ-FE engine and 3ZZ-FE engines are compared below.

System	Outline	New	Previous
EFI (Electronic Fuel Injection) [See page EG-36]	● An L-type EFI system detects the intake air volume with a hot-wire type air flow meter. ● The fuel injection system is a sequential multiport fuel injection system.	○	○
ESA (Electronic Spark Advance)	Ignition timing is determined by the engine ECU based on signals from various sensors. The engine ECU corrects ignition timing in response to engine knocking.	○	○
ISC (Idle Speed Control)	A rotary solenoid type ISC valve controls the fast idle and idle speeds.	○	○
VVT-i (Variable Valve Timing-intelligent) [See page EG-37]	Controls the intake camshaft to an optimal valve timing in accordance with the engine condition.	○	○
Fuel Pump Control [See page EG-41]	● Fuel pump operation is controlled by signals from the engine ECU. ● The fuel pump is stopped, when the SRS airbag is deployed in a front or side collision.	○	○
Oxygen Sensor Heater Control	Maintains the temperature of the oxygen sensors at an appropriate level to increase accuracy of detection of the oxygen concentration in the exhaust gas.	○	○
Evaporative Emission	The engine ECU controls the purge flow of evaporative emissions (HC) in the charcoal canister in accordance with engine conditions.	○	○
Engine Immobiliser	Prohibits fuel delivery and ignition if an attempt is made to start the engine with an invalid ignition key.	○	○
Air Conditioner Cut-off Control*	By turning the air conditioner compressor ON or OFF in accordance with the engine condition, drivability is maintained.	○	○
Cooling Fan Control [See page EG-42]	Cooling fan operation is controlled by signals from the engine ECU based on the water temperature sensor signal and the condition of the air conditioner operation.	○	—
Diagnosis [See page EG-43]	When the engine ECU detects a malfunction, the engine ECU diagnoses and memorizes the failed section.	○	○
Fail-Safe [See page EG-43]	When the engine ECU detects a malfunction, the engine ECU stops or controls the engine according to the data already stored in memory.	○	○

*: with Air Conditioner Model

2. Construction

The configuration of the engine control system is as shown in the following chart.

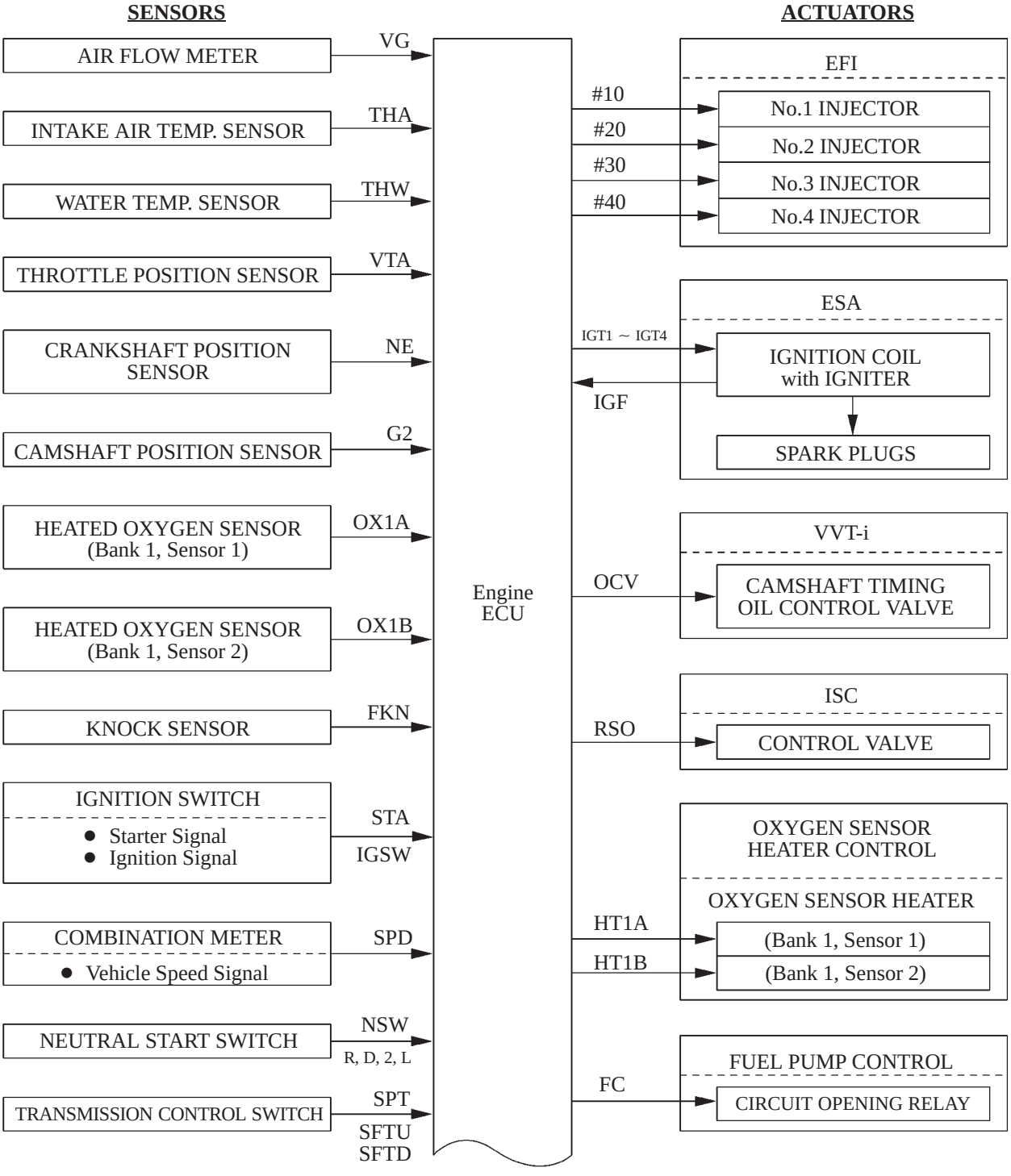

(Continued)

240EG71

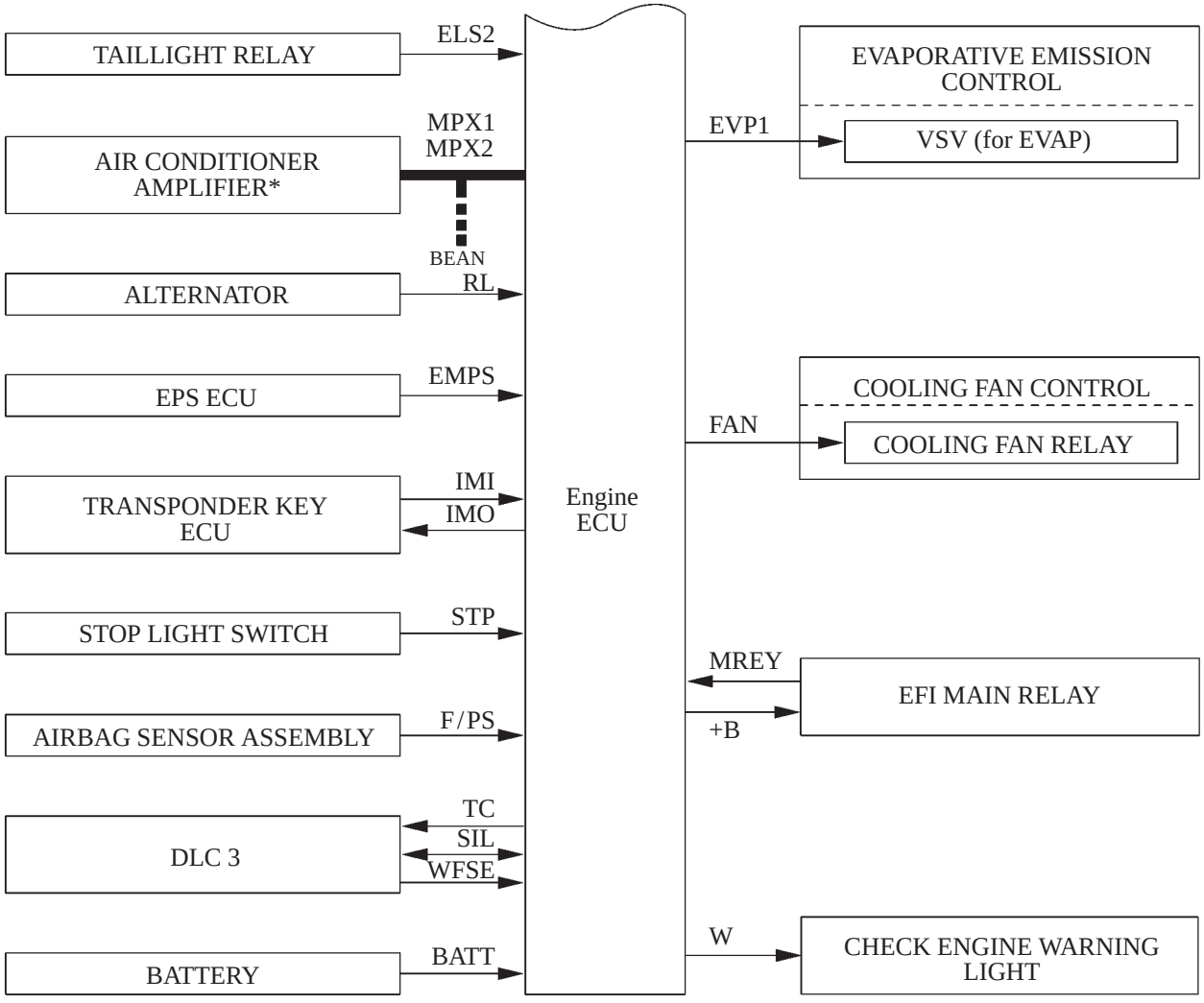

240EG72

*: with Air Conditioner Model

3. Engine Control System Diagram

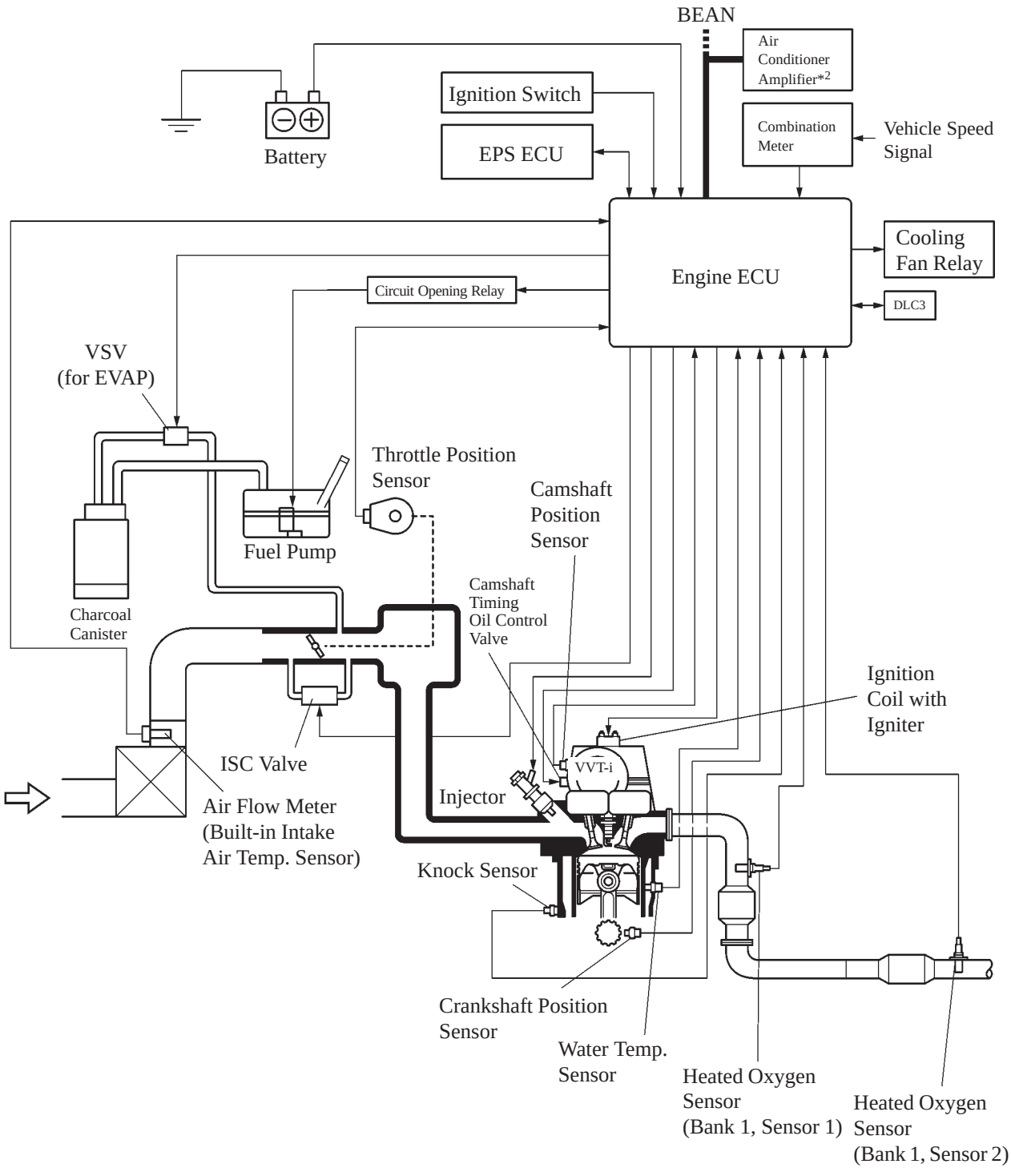

*: with Air Conditioner Model

240EG73

EG

4. Layout of Main Component

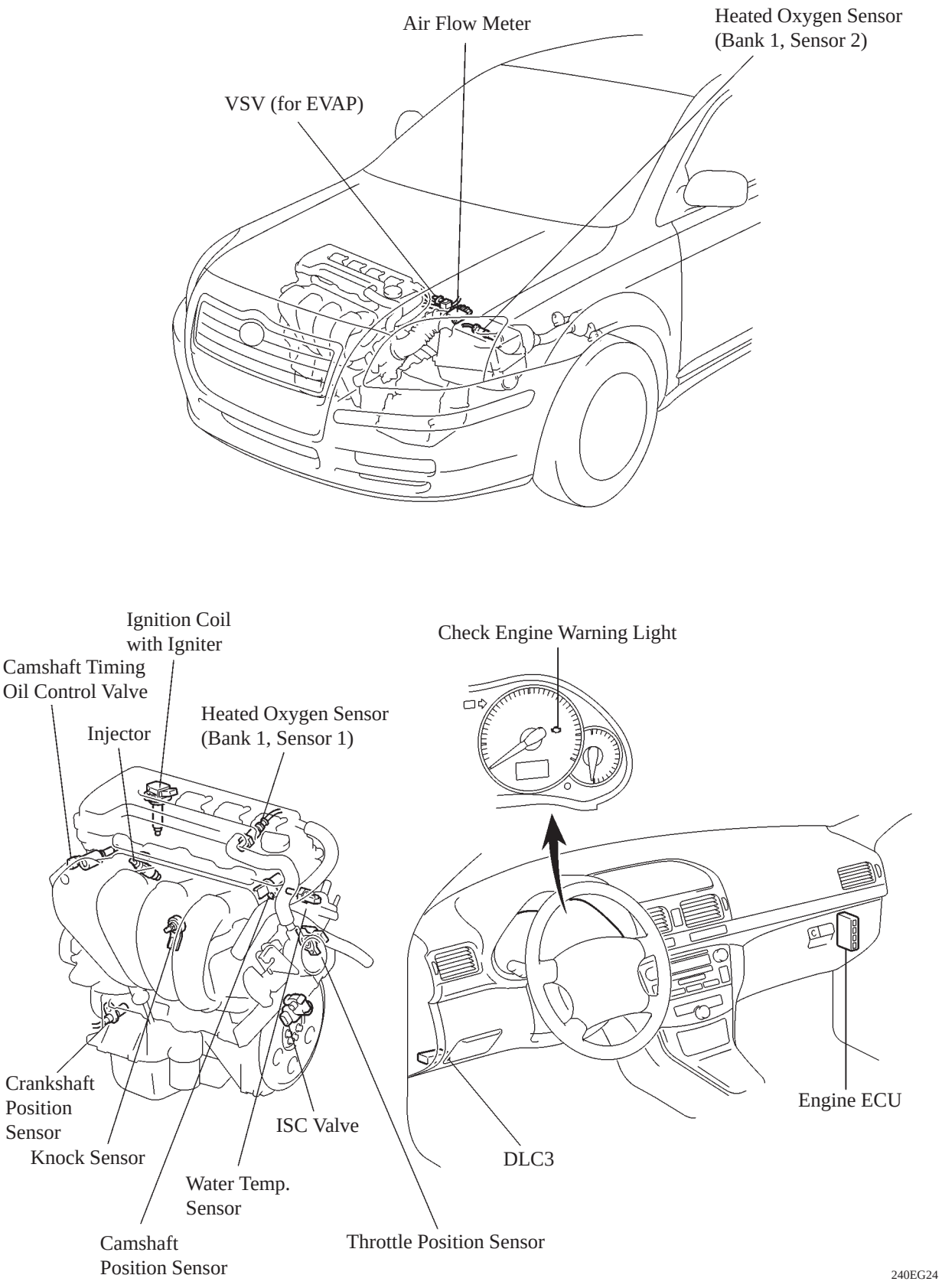

5. Main Component of Engine Control System

General

The main component of the 1ZZ-FE engine and 3ZZ-FE engine control systems is as follows:

: Change

Components	Outline	Quantity
Engine ECU	32-bit	1
Air Flow Meter	Hot-Wire Type	1
Crankshaft Position Sensor (Rotor Teeth)	Pick-Up Coil Type (36 – 2)	1
Camshaft Position Sensor (Rotor Teeth)	Pick-Up Coil Type (3)	1
Throttle Position Sensor	Linear Type	1
Knock Sensor	Built-in Piezoelectric Element Type (Flat Type)	1
Oxygen Sensor (Bank 1, Sensor 1 and 2)	with Heater	2
Injector	12-Hole Type (for 1ZZ-FE), 4-Hole Type (for 3ZZ-FE)	4
ISC Valve	Rotary Solenoid Type (1-coil Type)	1

Engine ECU

The 32-bit CPU of the engine ECU has been changed from the 16-bit CPU to increase the speed for processing the signals.

Service Tip

The length of time to clear the DTC via the battery terminal has been changed from the previous 10 seconds to 1 minute.

Air Flow Meter

- This compact and lightweight air flow meter, which is a plug-in type, allows a portion of the intake air to flow through the detection area. By directly measuring the mass and the flow rate of the intake air, the detection precision is improved and the intake air resistance has been reduced.
- This air flow meter has a built-in intake air temperature sensor.

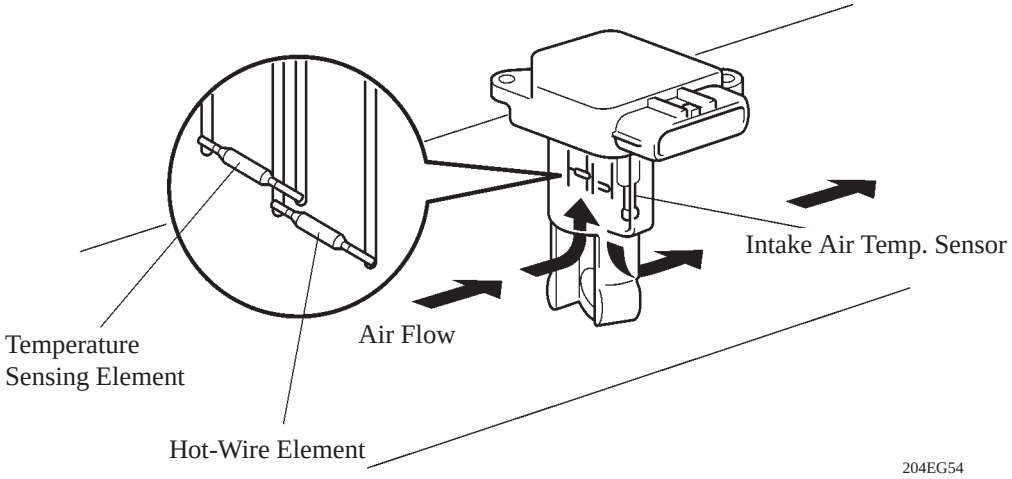

Crankshaft Position Sensor

The timing rotor of the crankshaft consists of 34 teeth, with 2 teeth missing. The crankshaft position sensor outputs the crankshaft rotation signals every 10■ and the missing teeth are used to determine the top-dead-center.

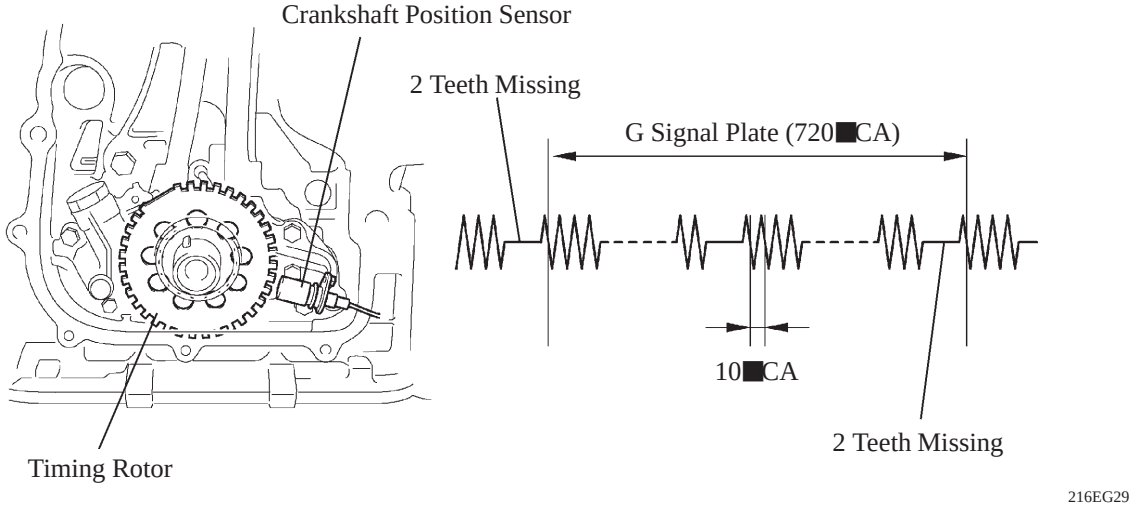

Camshaft Position Sensor

To detect the camshaft position, a timing rotor on the intake camshaft is used to generate 3 pulses for every 2 revolutions of the crankshaft.

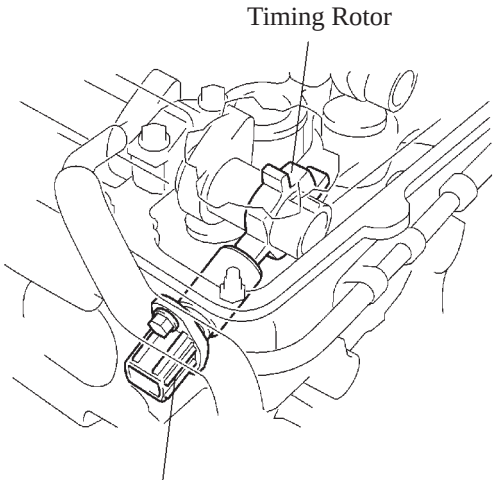

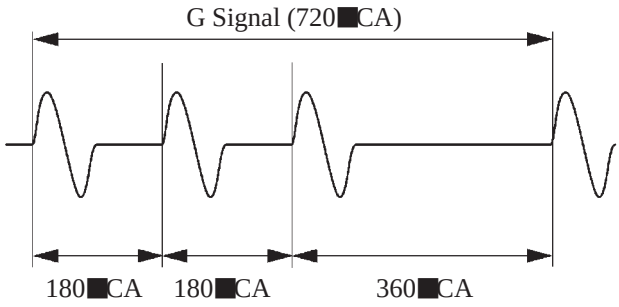

216EG30

Knock Sensor (Flat Type)

1) General

In the conventional type knock sensor (resonant type), a vibration plate which has the same resonance point as the knocking frequency of the engine is built in and can detect the vibration in this frequency band.

On the other hand, a flat type knock sensor (non-resonant type) has the ability to detect vibration in a wider frequency band from about 6 kHz to 15 kHz, and has the following features.

- The engine knocking frequency will change a bit depending on the engine speed. The flat type knock sensor can detect the vibration even when the engine knocking frequency is changed. Thus the vibration detection ability is increased compared to the conventional type knock sensor, and a more precise ignition timing control is possible.

—·— : Resonance Characteristic of Conventional Type

——— : Resonance Characteristic of Flat Type

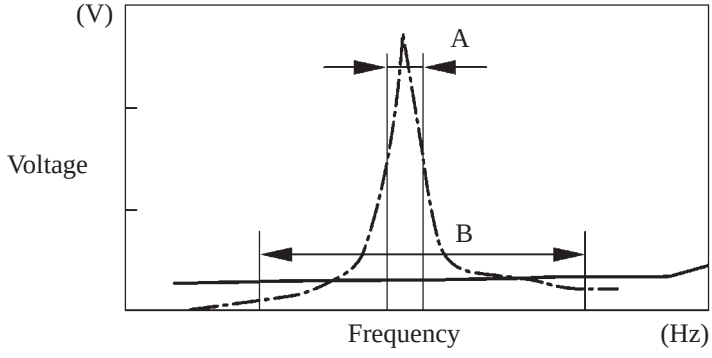

A: Detection Band of Conventional Type
B: Detection Band of Flat Type

Characteristic of Knock Sensor

214CE04

2) Construcition

- The flat type knock sensor is installed on the engine through the stud bolt installed on the cylinder block. For this reason, a hole for the stud bolt run through the center of the sensor.
- Inside of the sensor, a steel weight is located on the upper portion and a piezoelectric element and is located under the weight through the insulator.
- The open/short circuit detection resistor is integrated.

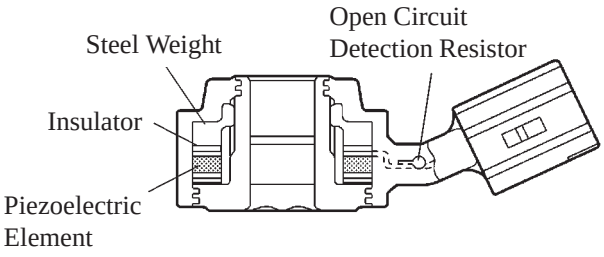

Flat Type Knock Sensor (Non-Resonant Type)

214CE01

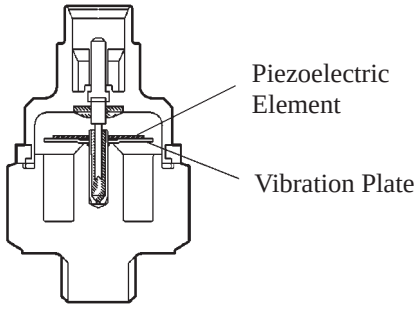

Conventional Type Knock Sensor (Resonant Type)

214CE02

3) Operation

The knocking vibration is transmitted to the steel weight and its inertia applies pressure to the piezoelectric element. The action generates electromotive force.

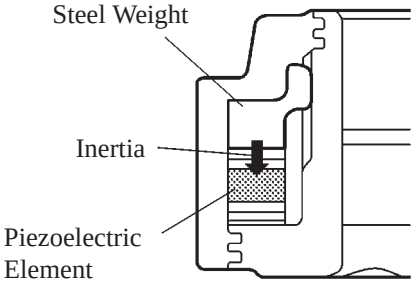

214CE08

4) Open/Short Circuit Detection Resistor

During ignition ON, the open/short circuit detection resistor in the knock sensor and the resistor in the Engine ECU keep the voltage at the terminal FKN+ constant.An IC (Integrated Circuit) in the Engine ECU is always monitoring the voltage of the terminal FKN+. If the open/short circuit occurs between the knock sensor and the Engine ECU, the voltage of the terminal FKN+ will change and the Engine ECU detects the open/short circuit and stores DTC (Diagnostic Trouble Code) P0325.

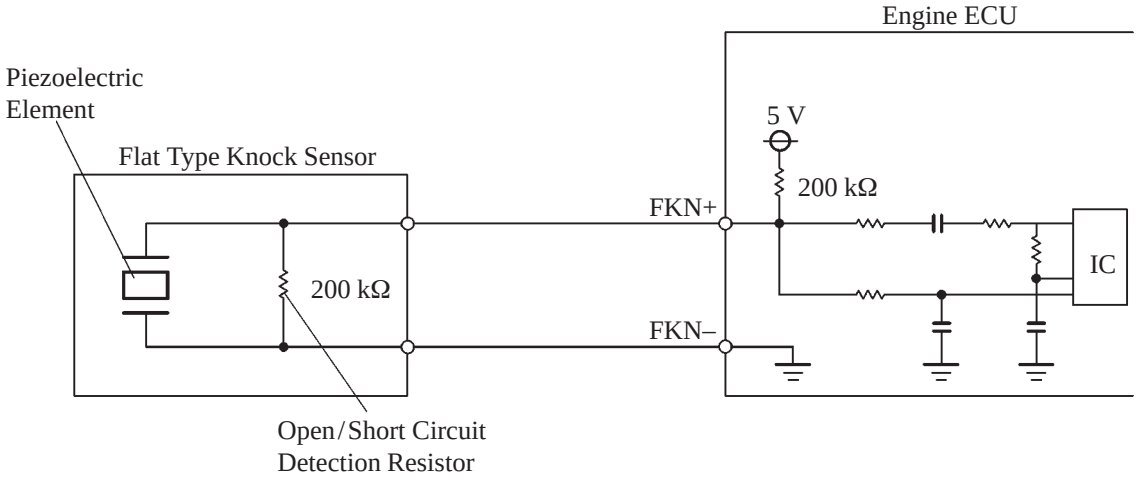

214CE06

Service Tip

- In accordance with the adoption of an open/short circuit detection resistor, the inspection method for the sensor has been changed. For details, refer to 1ZZ-FE, 3ZZ-FE Engine Repair Manual (Pub. No. RM923E).
- To prevent the water accumulation in the connecter, make sure to install the flat type knock sensor in the position as shown in the following illustration.

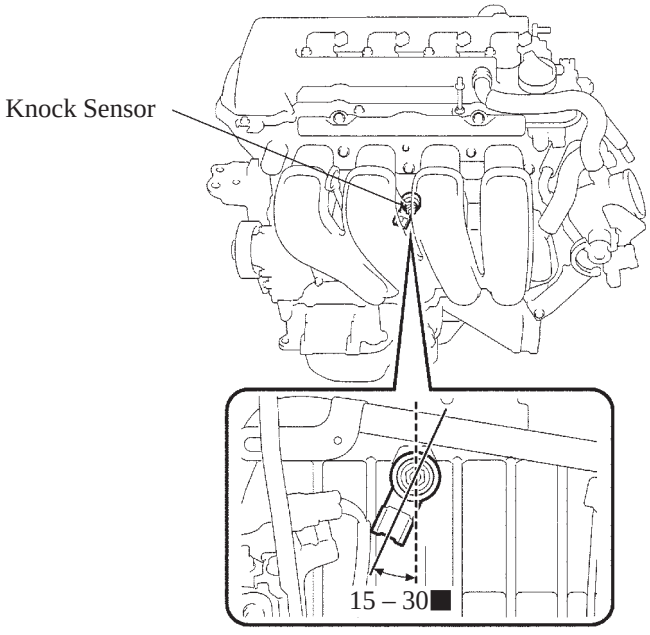

222EG13

6. EFI (Electronic Fuel Injection) System

- An L-type EFI system directly detects the intake air mass with a hot wire type mass air flow meter.
- An independent injection system (in which fuel is injected once into each cylinder for each two revolutions of the crankshaft) has been adopted.
- There are two (synchronous and non-synchronous) injections:
  a) The synchronous injection in which corrections based on the signals from the sensors are added to the basic injection time so that injection occurs always at the same position.
  b) The non-synchronous injection in which injection is effected by detecting the requests from the signals of the sensors regardless of the crankshaft angle.

  Furthermore, to protect the engine and achieve lower fuel consumption, the system uses a fuel cutoff in which the injection of fuel is stopped temporarily in accordance with the driving conditions.
- This system performs group injection when the water temperature is extremely low and the engine speed is low.

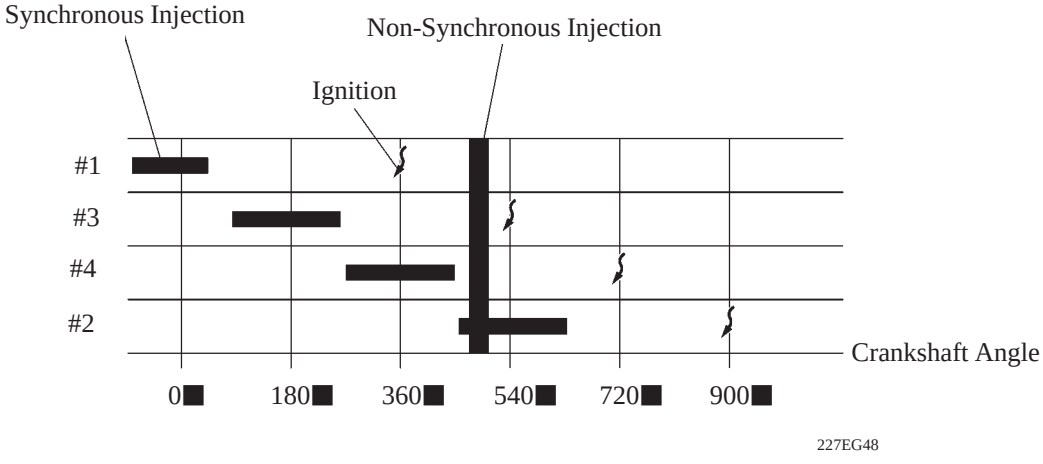

7. VVT-i (Variable Valve Timing-intelligent) System

General

- The VVT-i system is designed to control the intake camshaft within a range of 40° (of Crankshaft Angle) to provide valve timing that is optimally suited to the engine condition. This improves torque in all the speed ranges as well as increasing fuel economy, and reducing exhaust emissions.

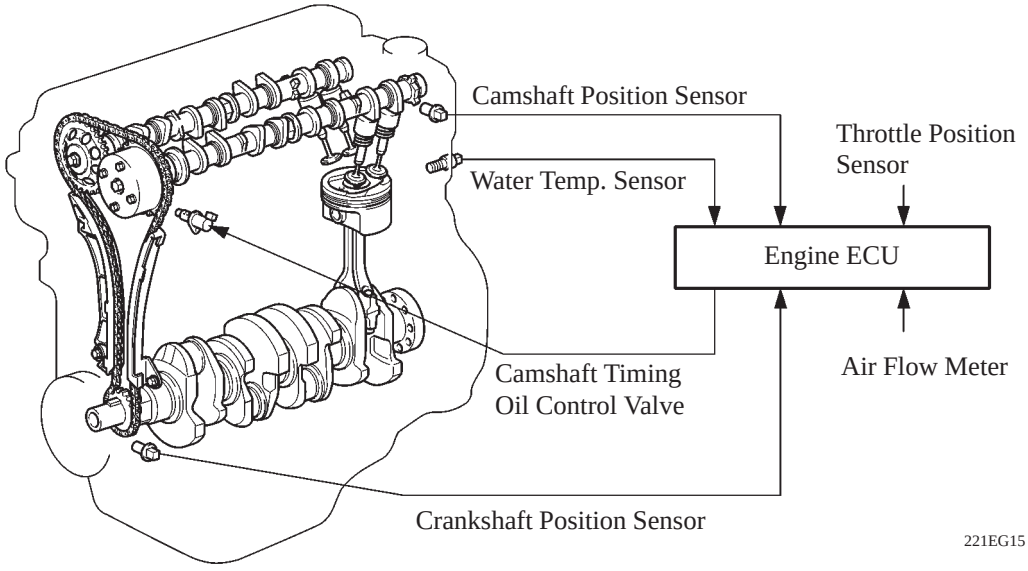

- Using the engine speed, intake air volume, throttle position and water temperature, the engine ECU can calculate optimal valve timing for each driving condition and controls the camshaft timing oil control valve. In addition, the engine ECU uses signals from the camshaft position sensor and the crankshaft position sensor to detect the actual valve timing, thus providing feedback control to achieve the target valve timing.

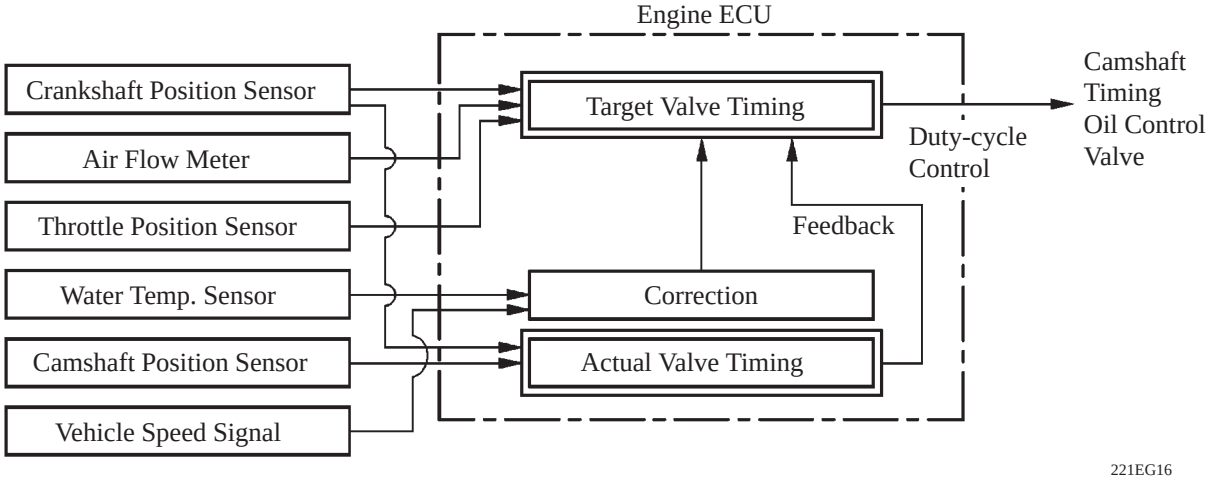

Effectiveness of the VVT-i System

Operation State	Objective		Effect
● During Idling ● At Light Load	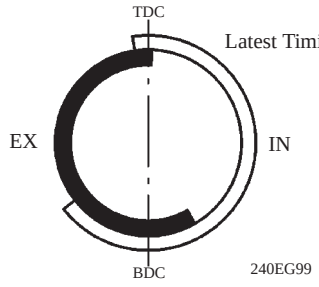	Minimizing overlap to reduce blow back to the intake side	● Stabilized idling rpm ● Better fuel economy
At Medium Load	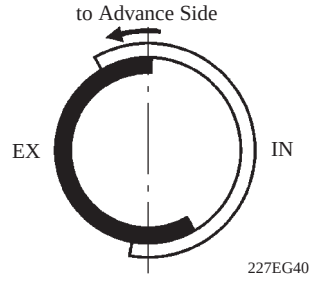	Increasing overlap to increase internal EGR to reduce pumping loss	● Better fuel economy ● Improved emission control
In Low to Medium Speed Range with Heavy Load	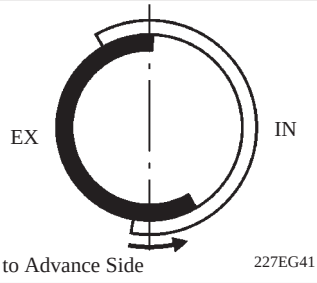	Advancing the intake valve close timing for volumetric efficiency improvement	Improved torque in low to medium speed range
In High Speed Range with Heavy Load	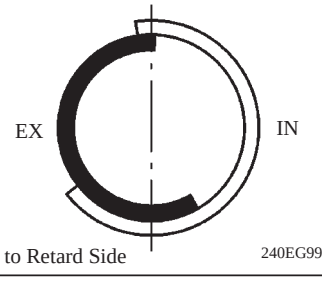	Retarding the intake valve close timing for volumetric efficiency improvement	Improved output
At Low Temp.	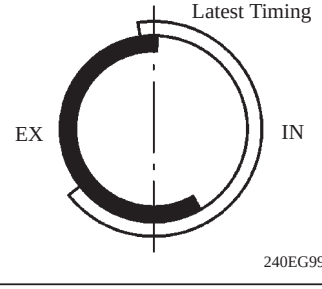	Minimizing overlap to prevent blow back to the intake side leads to the lean burning condition, and stabilizes the idling speed at fast idle	● Stabilized fast idle rpm ● Better fuel economy
● Upon Starting ● Stopping the Engine	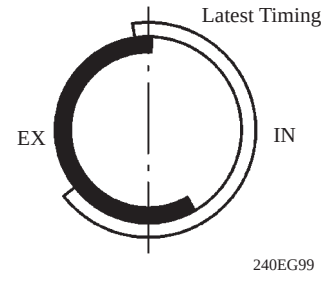	Minimizing overlap to reduce blow back to the intake side	Improved startability

Construction

1) VVT-i Controller

This controller consists of the housing driven from the timing chain and the vane coupled with the intake camshaft.
The oil pressure sent from the advance or retard side path at the intake camshaft causes rotation in the VVT-i controller vane circumferential direction to vary the intake valve timing continuously.
When the engine is stopped, the intake camshaft will be in the most retarded state to ensure startability.
When hydraulic pressure is not applied to the VVT-i controller immediately after the engine has been started, the lock pin locks the movement of the VVT-i controller to prevent a knocking noise.

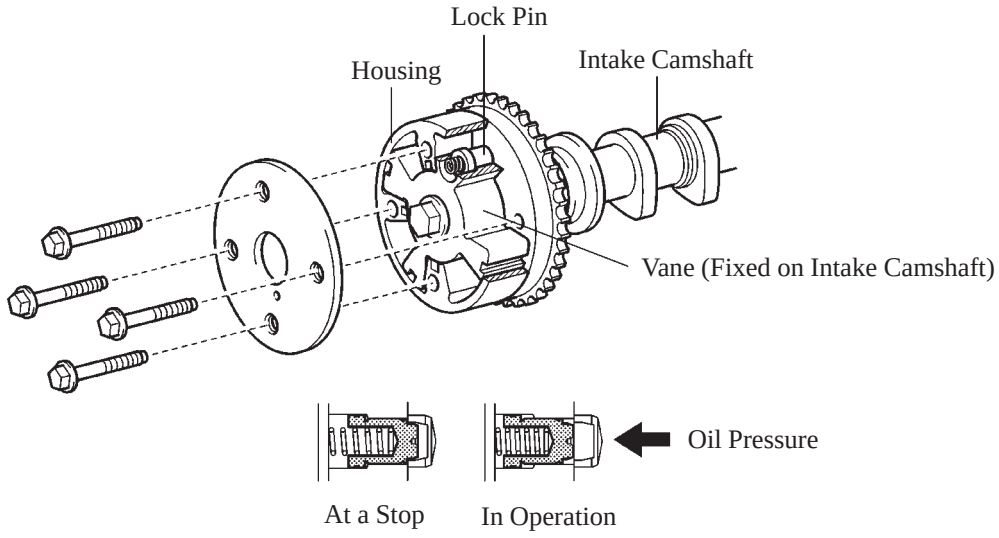

Lock Pin

2) Camshaft Timing Oil Control Valve

This camshaft timing oil control valve controls the spool valve position in accordance with the duty-cycle control from the engine ECU. This allows hydraulic pressure to be applied to the VVT-i controller advance or retard side. When the engine is stopped, the camshaft timing oil control valve is in the most retard state.

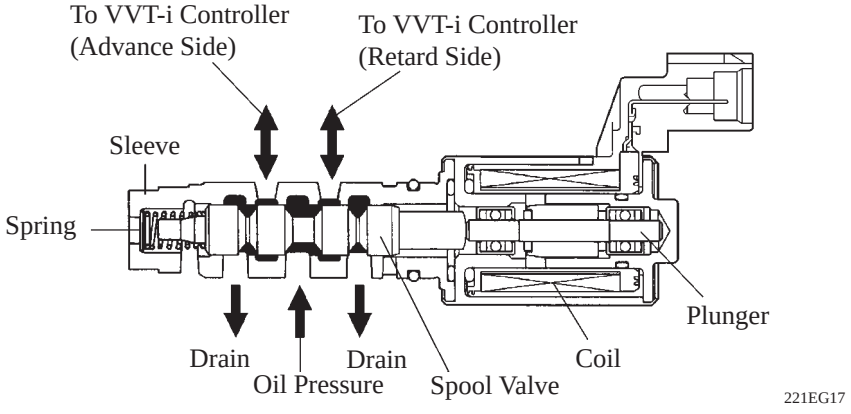

Operation

1) Advance

When the camshaft timing oil control valve is positioned as illustrated below by the advance signals from the engine ECU, the resultant oil pressure is applied to the timing advance side vane chamber to rotate the camshaft in the timing advance direction.

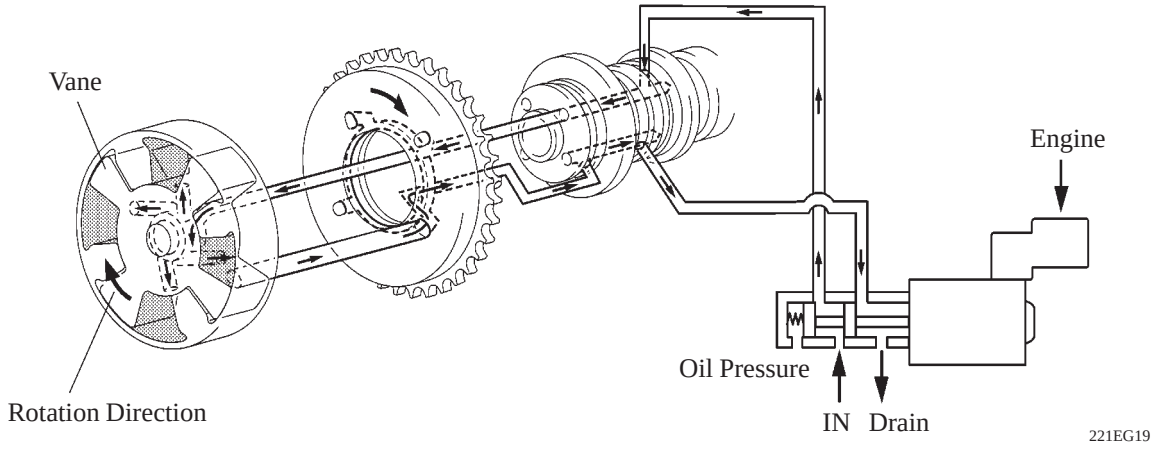

2) Retard

When the camshaft timing oil control valve is positioned as illustrated below by the retard signals from the engine ECU, the resultant oil pressure is applied to the timing retard side vane chamber to rotate the camshaft in the timing retard direction.

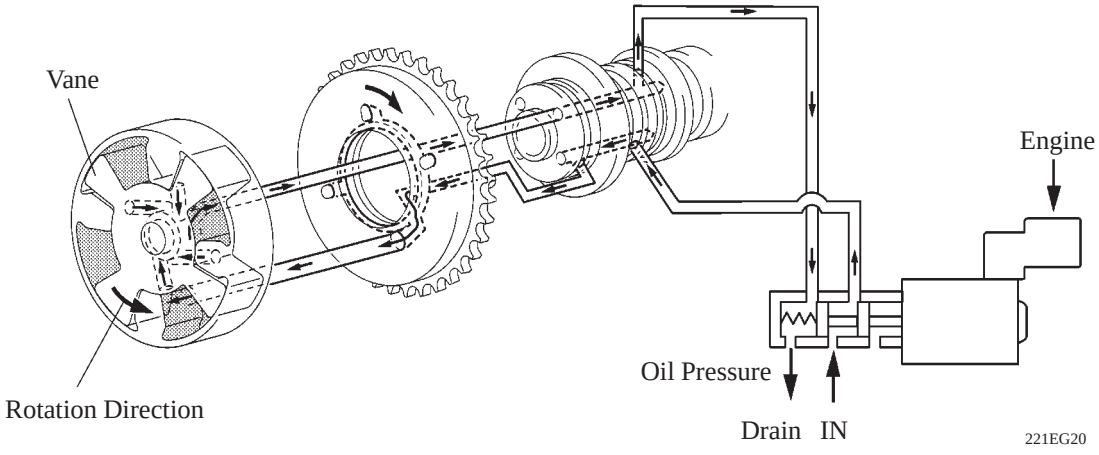

3) Hold

After reaching the target timing, the valve timing is held by keeping the camshaft timing oil control valve in the neutral position unless the traveling state changes.
This adjusts the valve timing at the desired target position and prevents the engine oil from running out when it is unnecessary.

8. Fuel Pump Control

A fuel cut control is adopted to stop the fuel pump when the airbag is deployed at the front or side collision. In this system, the airbag deployment signal from the airbag sensor assembly is detected by the engine ECU, and it turns OFF the circuit opening relay.
After the fuel cut control has been activated, turning the ignition switch from OFF to ON cancels the fuel cut control, and the engine can be restarted.

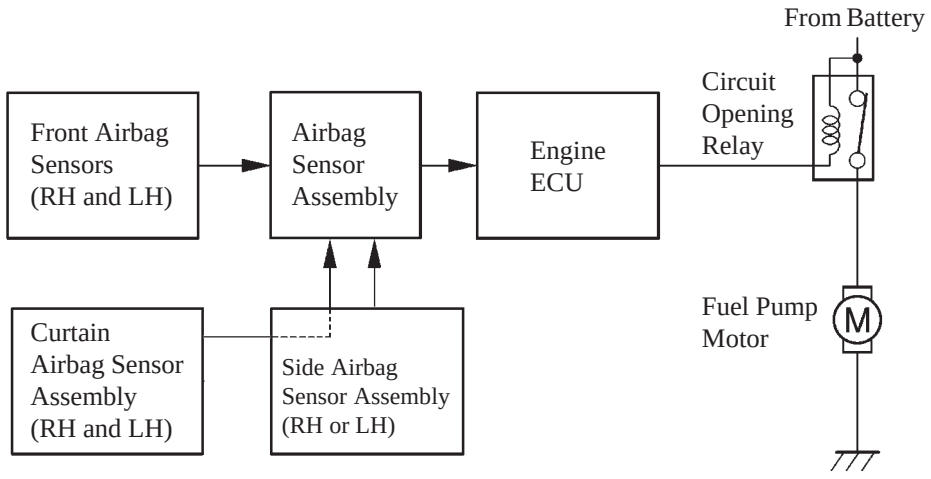

240EG74

9. Cooling Fan Control

- On the models without air conditioner, the engine ECU controls the operation of the cooling fan based on the water temp. sensor signals.

▶ Wiring Diagram ◀

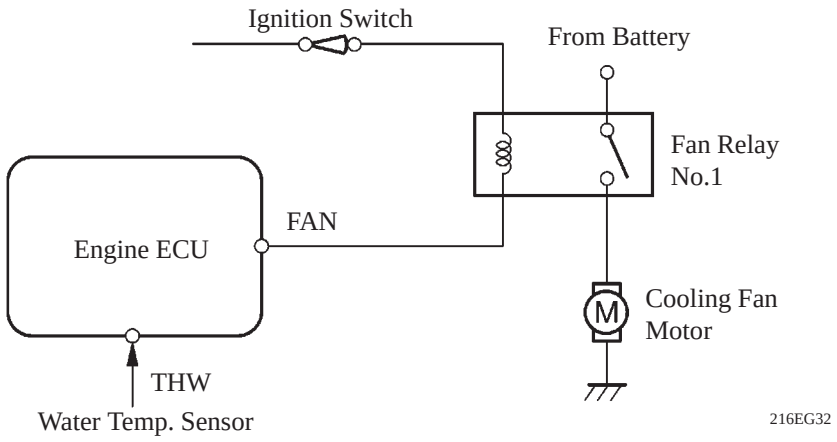

Cooling Fan Operation	OFF	ON
Water Temp. °C (°F)	94.5 (202.1) or lower	96 (204.8) or higher

- On the models with an air conditioner, there are two cooling fan speed, Low and High. High speed is controlled by the engine ECU based on the water temperature sensor signal and A/C pressure switch signal. Low speed is controlled by the A/C amplifier.

▶ Wiring Diagram ◀

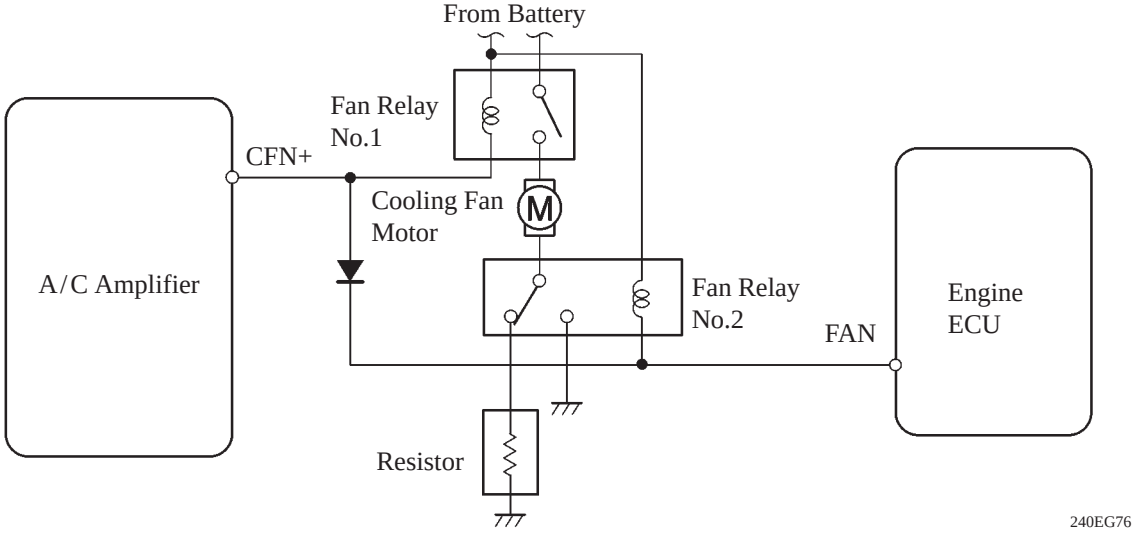

▶ Cooling Fan Operation ◀

Air Conditioner Condition		Water Temp. °C (°F)	
Compressor	Refrigerant Pressure MPa (kgf/cm^2, PSI)	94.5 (202.1) or lower	96 (204.8) or higher
OFF	1.2 (12.5, 178) or lower	OFF	High
ON	1.2 (12.5, 178) or lower	Low	High
	1.5 (15.5, 220) or higher	High	High

10. Diagnosis

- The diagnosis system of the 1ZZ-FE and 3ZZ-FE engines uses the EURO-OBD (Europe On-Board Diagnosis) that complies with European regulations.
- When the Engine ECU detects a malfunction, the Engine ECU makes a diagnosis and memorizes the failed section. Furthermore, the check engine warning light in the combination meter illuminates or blinks to inform the driver.
- At the same time, the DTC (Diagnostic Trouble Codes) are stored in memory. The DTCs can be read by connecting a hand-held tester.
- For details, see the Avensis Repair Manual (Pub. No. RM1018E).

11. Fail-Safe

When the Engine ECU detects a malfunction, the Engine ECU stops or controls the engine according to the data already stored in the memory as the following condition.

DTC	Fail-safe Operation	Fail-safe Deactivation Conditions
P0100	Ignition timing is fixed at 5° BTDC.	If the engine ECU detects “Pass” condition, the engine ECU will return to “Normal mode”.
P0110	Intake air temperature is fixed at 20°C (68°F).	If the engine ECU detects “Pass” condition, the engine ECU will return to “Normal mode”.
P0115	Water temperature is fixed at 80°C (176°F).	If the engine ECU detects “Pass” condition, the engine ECU will return to “Normal mode”.
P0120	VTA is fixed at 0° .	The following condition must be repeated at least 2 times consecutively when closed throttle position switch is OFF: VTA ≧ 0.1 V and ≦ 0.95 V
P0135 P0141	The heater circuit in which an abnormality is detected is turned off.	Ignition switch OFF
P0325	Max. timing retardation.	Ignition switch OFF
P1300 P1305 P1310 P1315	Fuel cut	If the engine ECU detects “Pass” condition, the engine ECU will return to “Normal mode”.
P1656	It cut electrically the circuit in which an abnormality is detected.	If the engine ECU detects “Pass” condition, the engine ECU will return to “Normal mode”.

1AZ-FE ENGINE

■ DESCRIPTION

The 1AZ-FE engine is an in-line, 4-cylinder, 2.0-liter, 16-valve DOHC engine. This engine has been provided for unleaded gasoline (Europe) and for leaded gasoline (General Countries).
These engines have been adopted the DIS (Direct Ignition System) and big bore/long port intake manifold. It has been developed to realize high performance, quietness, fuel economy and clean emissions.
For differences between unleaded and leaded gasoline, see page EG-47.

▶ For Unleaded Gasoline ◀

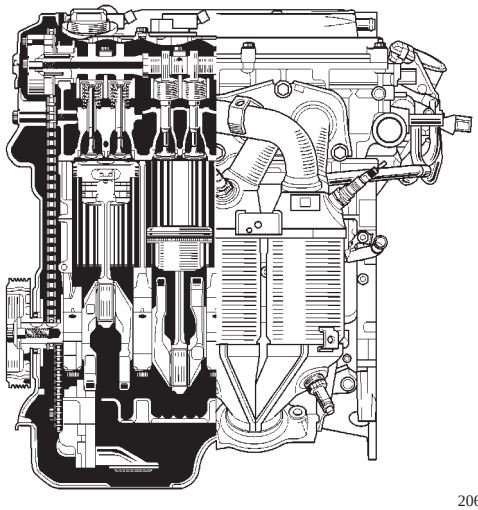

206EG01

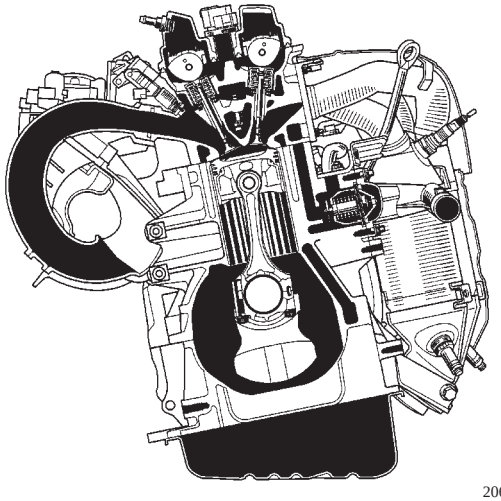

206EG02

▶ For Leaded Gasoline ◀

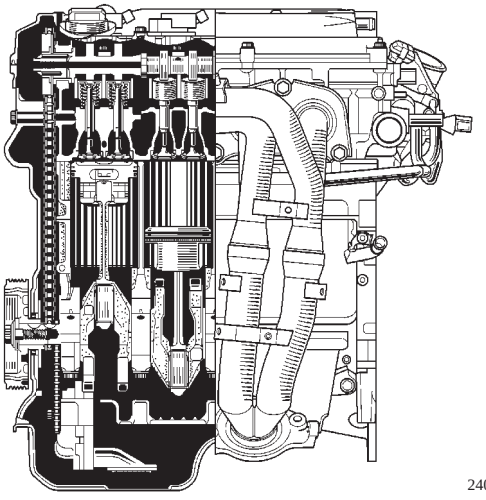

240EG81

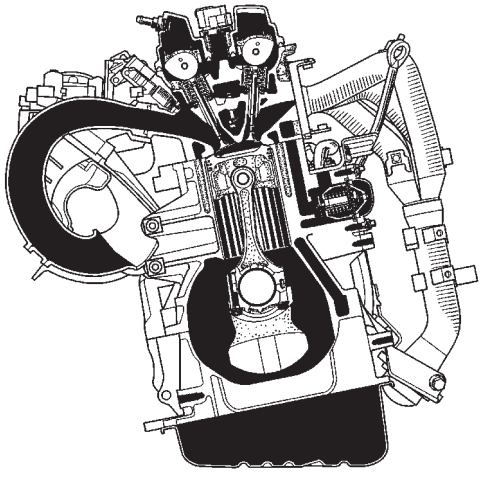

240EG82

▶ Engine Specification ◀

Engine			1AZ-FE	
Gasoline (Destination)			Unleaded Gasoline (Europe)	Leaded Gasoline (General Countries)
No. of Cyls. & Arrangement			4-Cylinder, In-line	←
Valve Mechanism			16-Valve DOHC, Chain Drive (with VVT-i)	16-Valve DOHC, Chain Drive (without VVT-i)
Combustion Chamber			Pentroof Type	←
Manifolds			Cross-Flow	←
Fuel System			EFI	←
Ignition System			DIS	←
Displacement	cm^3 (cu. in.)		1998 (121.9)	←
Bore x Stroke	mm (in.)		86.0 x 86.0 (3.39 x 3.39)	←
Compression Ratio			9.8 : 1	9.5 : 1
Max. Output	[EEC]		108 kW @ 6000 rpm	100.7 kW @ 5600 rpm
Max. Torque	[EEC]		192 N·m @ 4000 rpm	190 N·m @ 4000 rpm
Valve Timing	Intake	Open	–4° ~ 46° BTDC	3° BTDC
		Close	60° ~ 10° ABDC	43° ABDC
	Exhaust	Open	45° BBDC	←
		Close	3° ATDC	←
Firing Order			1 – 3 – 4 – 2	←
Research Octane Number			95 or higher	←
Oil Grade			API SL, EC or ILSAC	←
Emission Regulation			European STEP III	—
Engine Service Mass* (Reference) kg (lb)		M/T	123 (271.2)	118 (260.1)
		A/T	117 (257.9)	112 (246.9)

*: Weight shows the figure with oil and water fully filled.

EG

▶ Performance Curve ◀

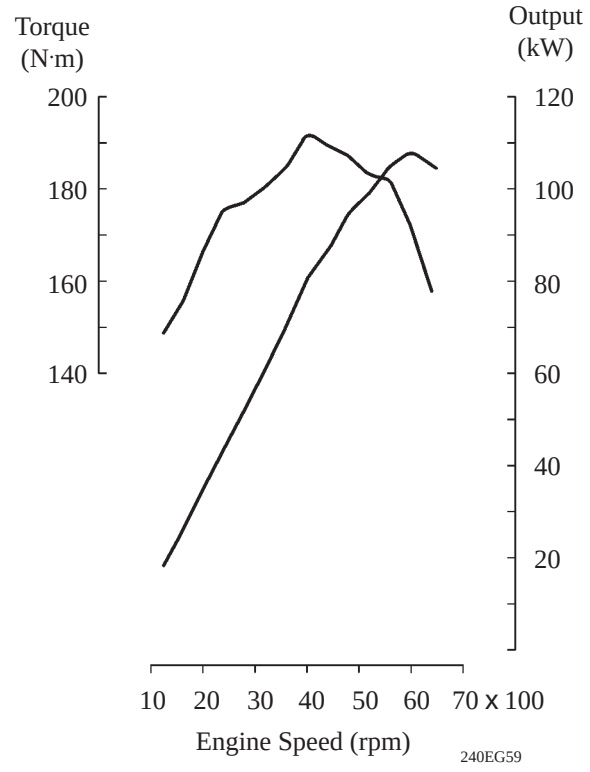

▶ Valve Timing ◀

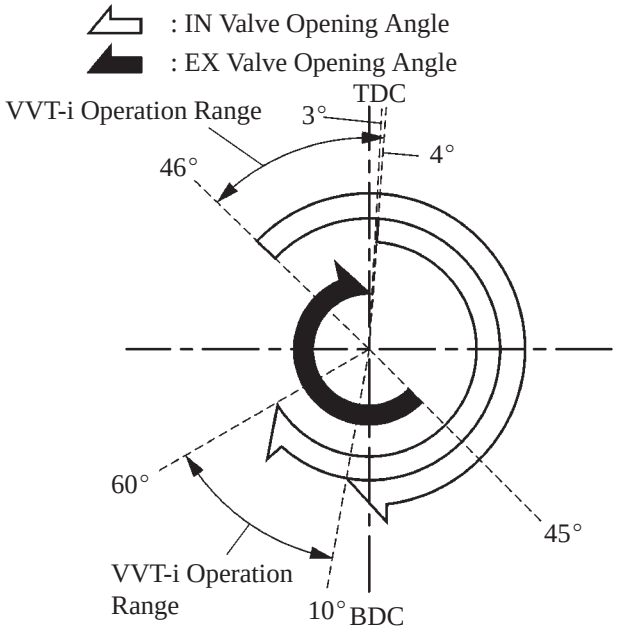

For Unleaded Gasoline

▶ Performance Curve ◀

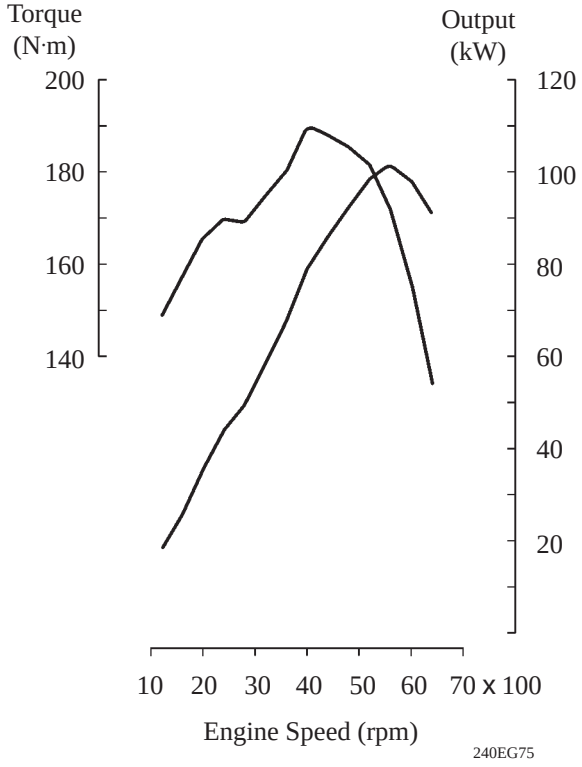

▶ Valve Timing ◀

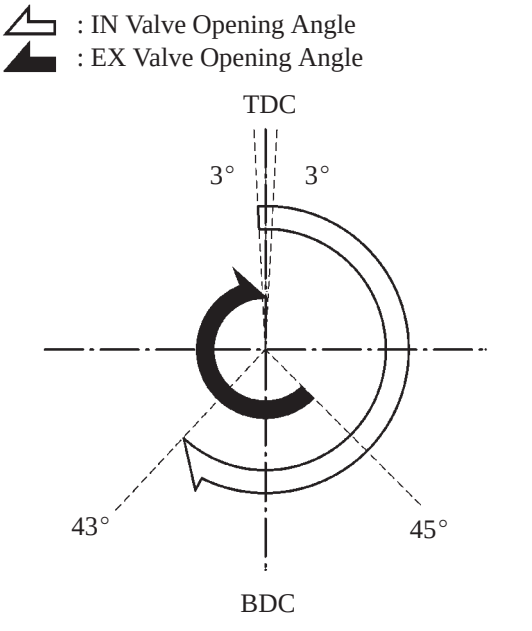

For Leaded Gasoline

■ MAJOR DIFFERENCE (between Unleaded Gasoline and Leaded Gasoline)

Item		Unleaded Gasoline	Leaded Gasoline
Engine Proper	The piston skirt is coated with resin.	○	—
Valve Mechanism	The VVT-i is used.	○	—
Exhaust System	A thin-wall ceramic TWC (Three-Way Catalytic Converter) is used on the exhaust manifold.	○	—
Fuel System	The 12-hole type fuel injectors are used.	○	—
	The 4-hole type fuel injectors are used.	○	—
Ignition System	Iridium-tipped spark plugs are used.	○	—
Engine Control System	● Adoption of 32-bit Engine ECU. ● Cooling fan control is used. ● The diagnosis is used the M-OBD (Multiplex On-Board Diagnosis).	○	○
	● 2 air-fuel ratio sensors and 2 oxygen sensors are used. ● The VVT-i control is used. ● Air fuel ratio sensor and oxygen sensor heater controls are used.	○	—
	Variable resistor is used.	—	○

■FEATURES OF 1AZ-FE ENGINE

The 1AZ-FE engine has been able to achieve the following performance through the adoption of the items listed below.

(1) High performance and fuel economy

(2) Low noise and vibration

(3) Lightweight and compact design

(4) Good serviceability

(5) Clean emission

Item		(1)	(2)	(3)	(4)	(5)	Unleaded Gasoline	Leaded Gasoline
Engine Proper	A cylinder block made of aluminum alloy along with a magnesium head cover has been adopted.			○			○	○
	The taper squish shape has been adopted for the piston head, increasing combustion efficiency.	○				○	○	○
	A timing chain and chain tensioner have been used.		○	○	○		○	○
	The VVT-i system is used.	○				○	○	—
Intake And Exhaust System	Intake manifold made of plastic is used.			○			○	○
	A dual type exhaust manifold is used.	○					○	○
	A thin-wall ceramic TWC (Three-Way Catalytic Converter) is used.					○	○	—
Fuel System	The fuel returnless system is used.			○	○	○	○	○
	Quick connectors are used to connect the fuel hose with the fuel pipe.			○	○	○	○	○
	Plastic made fuel tank has been adopted.			○			○	○
	12-hole type fuel injectors with high atomizing performance is used.	○				○	○	—
Ignition System	The DIS (Direct Ignition System) makes ignition timing adjustment unnecessary.					○	○	○
	Iridium-tipped spark plugs are used.	○			○		○	—
Starting System	The planetary reduction type starter with the interpolar magnet has been adopted.			○			○	○
Engine Control System	The use of an air fuel ratio sensor allows for precise control.					○	○	—

■ENGINE PROPER

1. Cylinder Head Cover

- A lightweight magnesium alloy diecast cylinder head cover is used.
- Acrylic rubber, which excels in heat resistance and reliability, has been adopted for the cylinder head cover gasket.

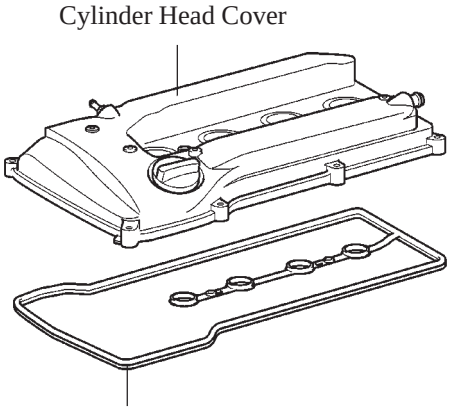

185EG35

2. Cylinder Head Gasket

A steel-laminate type cylinder head gasket has been adopted.
A shim has been added around the cylinder bore to increase the sealing surface, thus improving the sealing performance and durability.

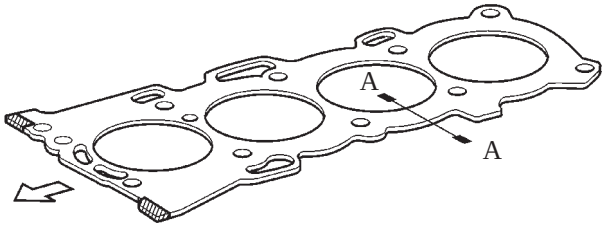

181EG04

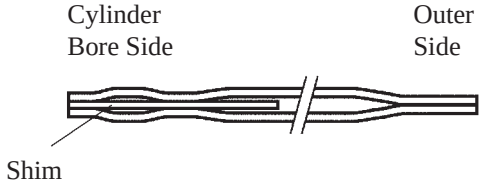

A – A Cross Section

240EG42

3. Cylinder Head

- Through the adoption of the taper squish combustion chamber, the engine knocking resistance and fuel efficiency have been improved.
- An upright intake port is used to improve the intake efficiency.
- Installing the injectors in the cylinder head enables the injectors inject fuel as close as possible to the combustion chamber. This prevents the fuel from adhering to the intake port walls, which reduces HC exhaust emissions.
- The routing of the water jacket in the cylinder head has been optimized to improve the cooling performance. In addition, a water bypass passage has been provided below the exhaust ports to reduce the number of parts and to achieve weight reduction.

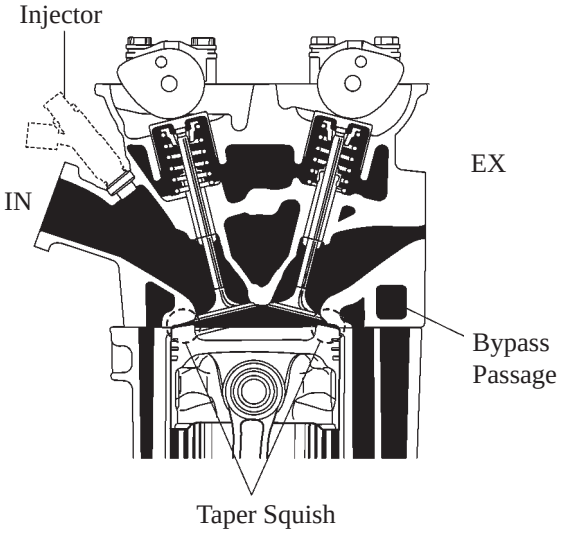

A – A Cross Section

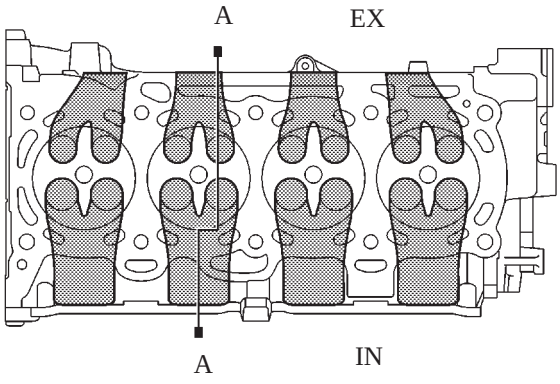

4. Cylinder Block

- Lightweight aluminum alloy is used for the cylinder block.
- By producing the thin cast-iron liners and cylinder block as a unit, compaction is realized.
- Passage holes are provided in the crankshaft bearing area of the cylinder block. As a result, the air at the bottom of the cylinder flows smoother, and pumping loss (back pressure at the bottom of the piston generated by the piston's reciprocal movement) is reduced to improve the engine's output.
- The oil filter and the air conditioner compressor bracket are integrated the crankcase, also the water pump swirl chamber, and the thermostat housing integrated the cylinder block to reduce the number of parts.

▶ Air Flow During Engine Revolution ◀

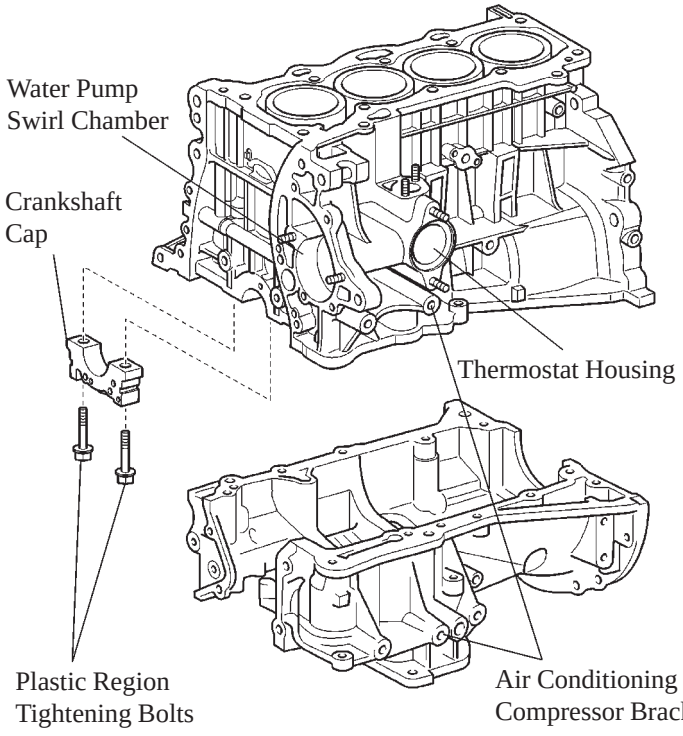

195EG14

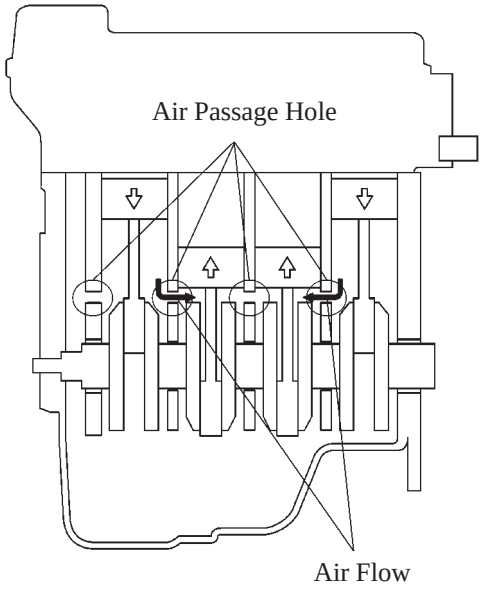

179EG04

5. Piston

- The piston is made of aluminum alloy and skirt area is made compact and lightweight.
- The piston head portion has adopted a taper squish shape to improve the fuel combustion efficiency.
- Full floating type piston pin is used.
- By increasing the machining precision of the cylinder bore diameter, the outer diameter of the piston has been made into one type.
- The piston skirt of the unleaded gasoline engine has been coated with resin to reduce the friction loss.

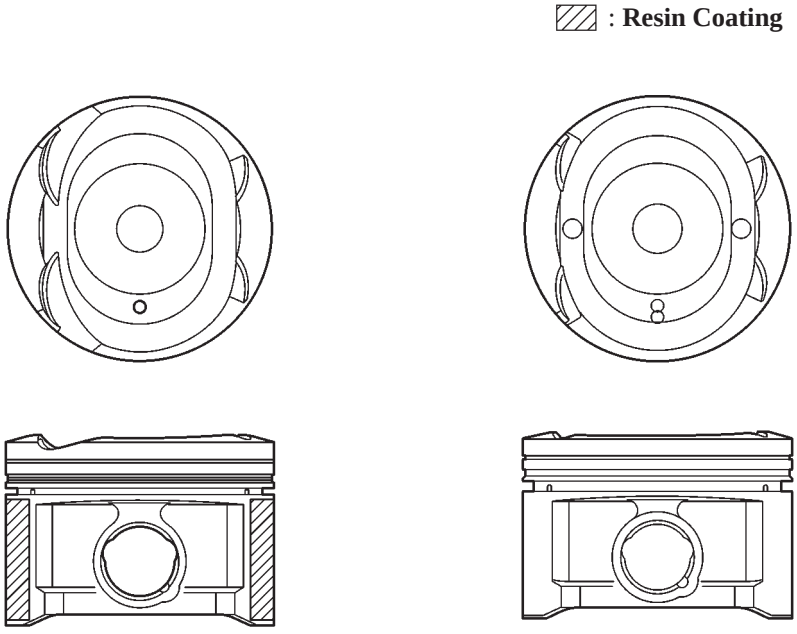

For Unleaded Engine **For Leaded Engine**

240EG09

6. Connecting Rod

- The connecting rods and caps are made of high strength material for weight reduction.
- Nutless-type plastic region tightening bolts of the connecting rod are adopted for a lighter design.
- The connecting rod bearings have been reduced in width to reduce friction.

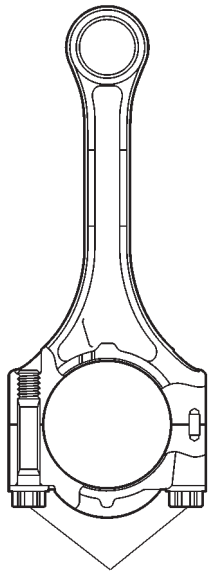

Plastic Region Tightening Bolts

240EG45

7. Crankshaft

- The forged crankshaft has 5 journals and 8 balance weights.
- The crankshaft bearings have been reduce in width to reduce friction.
- The precision and surface roughness of the pins and journals have been improved to reduce friction.

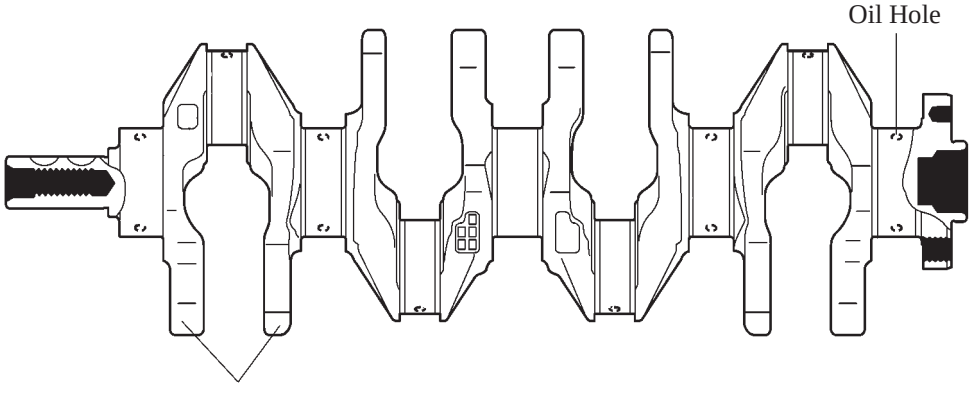

Balance Weights

240EG77

■VALVE MECHANISM

1. General

- In the unleaded gasoline engine, VVT-i system is used to improve fuel economy, engine performance and reduce exhaust emissions. For details, see page EG-75 in the VVT-i system section.
- Along with the increase in the amount of valve lift, the shimless type of valve lifter is used. This valve lifter increases the cam contact surface.

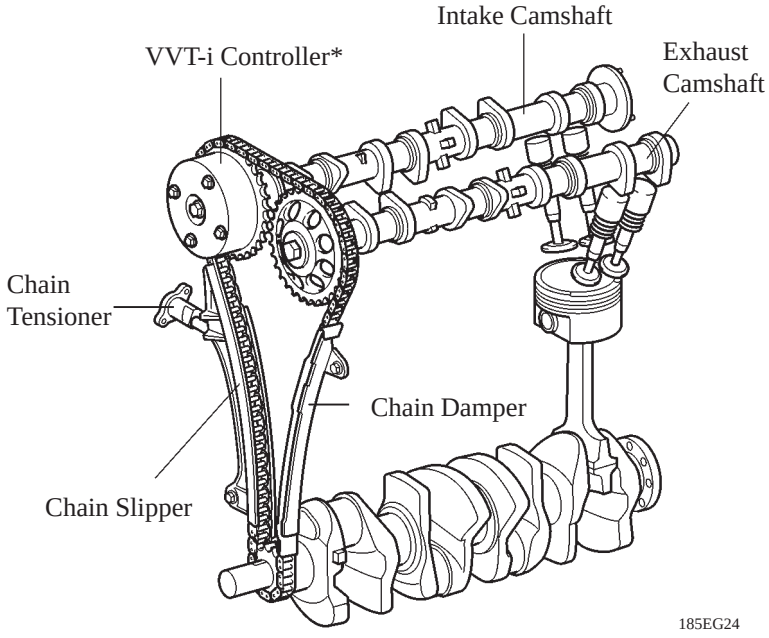

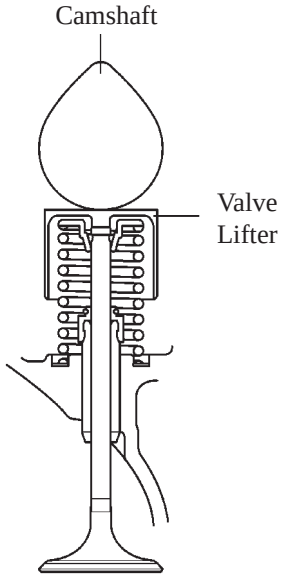

*: Only for Unleaded Gasoline

Service Tip

The adjustment of the valve clearance is accomplished by selecting and replacing the appropriate valve lifters.
A total of 35 valve lifters are available in 0.020 mm (0.008 in.) increments, from 5.060 mm (0.199 in.) to 5.740 mm (0.226 in.). For details, refer to see the Avensis Repair Manual (RM1018E).

2. Camshaft

- The intake camshaft is provided with timing rotor to trigger the camshaft position sensor.
- A VVT-i controller has been installed in the front of the intake camshaft of the unleaded gasoline engine to vary the timing of the intake valves.
- In conjunction with the adoption of the VVT-i system, an oil passage is provided in the intake camshaft in order to supply engine oil pressure to the VVT-i system.

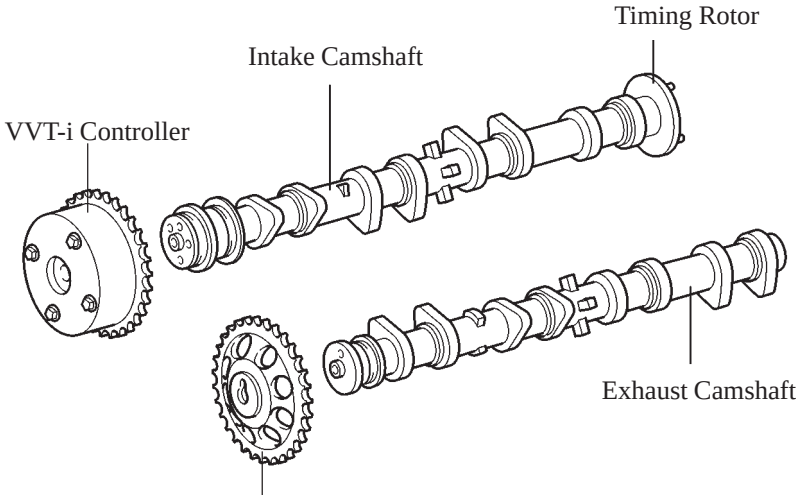

3. Timing Chain

- A roller chain with an 8 mm pitch has been adopted to make the engine more compact.
- The timing chain is lubricated by an oil jet.
- The chain tensioner uses a spring and oil pressure to maintain proper chain tension at all times. The chain tensioner suppresses noise generated by the timing chain.
- A ratchet type non-return mechanism is used.
- To achieve excellent serviceability, the chain tensioner is constructed so that it can be removed and installed from the outside of the timing chain cover.

Chain Tensioner

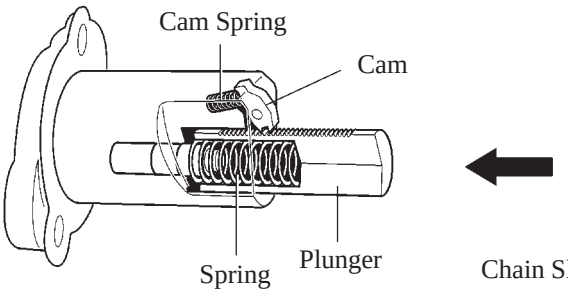

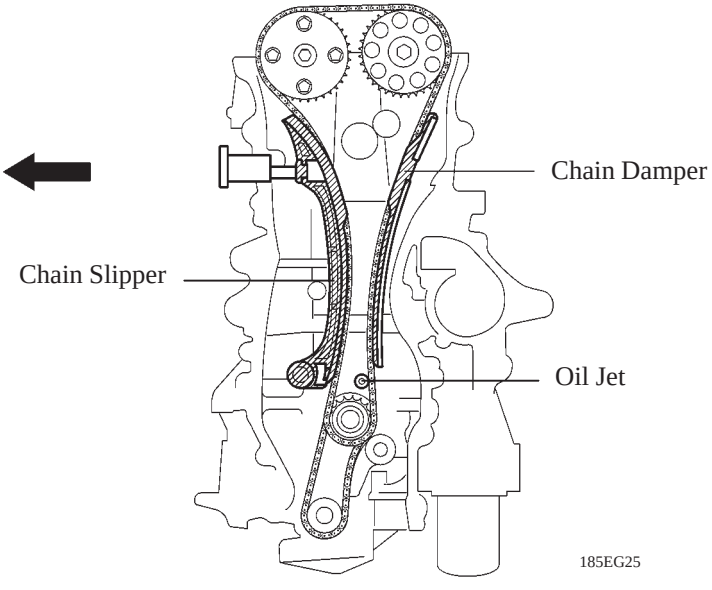

■LUBRICATION SYSTEM

1. General

- The lubrication circuit is fully pressurized and oil passes through an oil filter.
- The trochoidal type oil pump is chain-driven by the crankshaft.
- The oil filter is attached downward from the crankcase to improve serviceability.
- In the unleaded gasoline engine, along with the adoption of the VVT-i system, the cylinder head is provided with a VVT-i controller and a camshaft timing oil control valve. This system is operated by the engine oil.
- To improve serviceability, a service hole for changing the engine oil and replacing the oil filter are provided in the engine under cover.

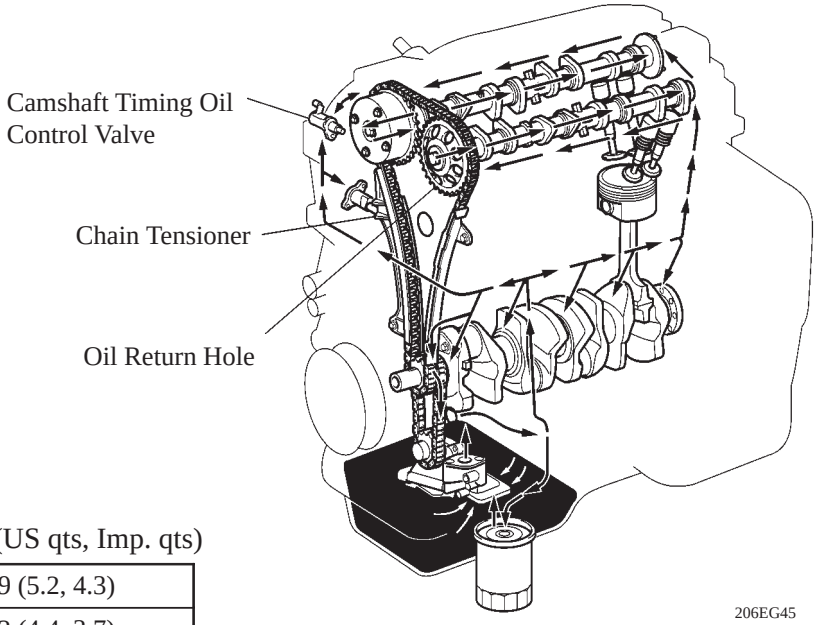

▶ Oil Capacity ◀

	liters (US qts, Imp. qts)
Dry	4.9 (5.2, 4.3)
with Oil Filter	4.2 (4.4, 3.7)
without Oil Filter	4.0 (4.2, 3.5)

▶ Engine Under Cover ◀

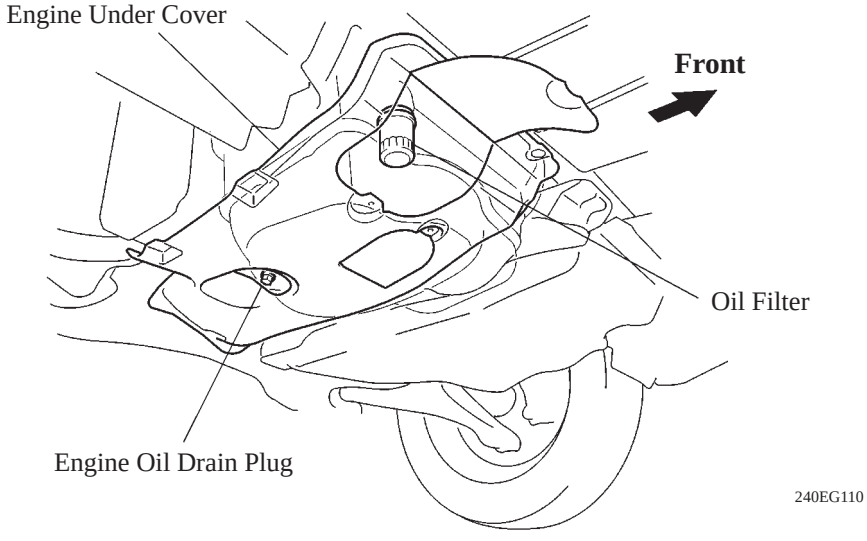

▶ Oil Circuit ◀

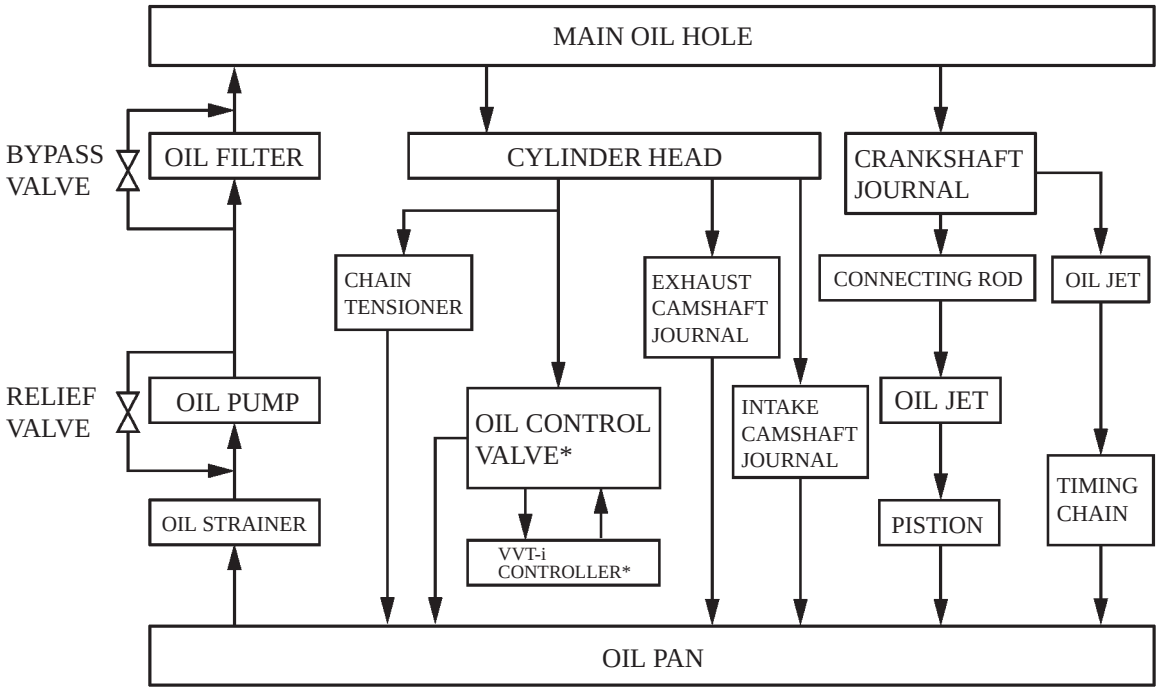

*: for Unleaded Engine

240EG135

EG

2. Oil Pump

- The trochoidal type oil pump is chain-driven by the crankshaft, and fits compactly inside the oil pan.
- Friction has been reduced by means of 2 relief holes in the internal relief system.

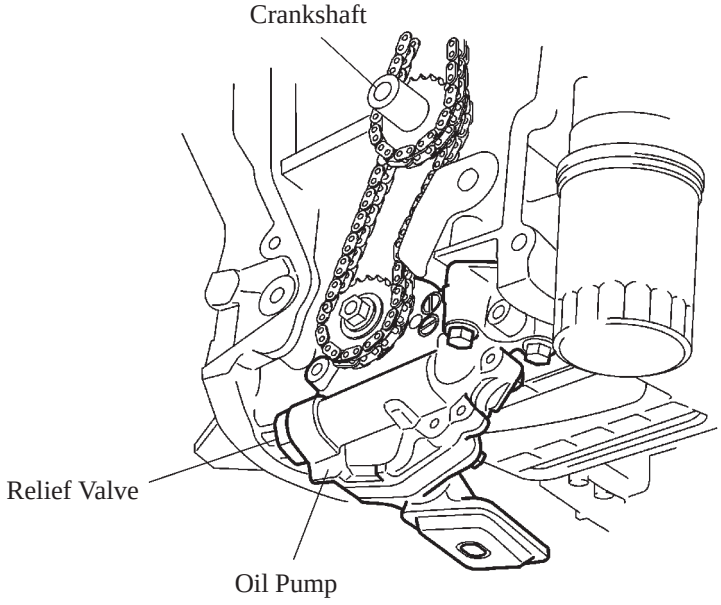

185EG27

■COOLING SYSTEM

1. General

- The cooling system is a pressurized, forced-circulation type.
- A thermostat with a bypass valve is located on the water inlet housing to maintain suitable temperature distribution in the cooling system.
- An aluminum radiator core is used for weight reduction.
- The flow of the engine coolant makes a U-turn in the cylinder block to ensure a smooth flow of the engine coolant. In addition, a bypass passage is enclosed in the cylinder head and the cylinder block.
- Warm water from the engine is sent to the throttle body to prevent freeze-up.

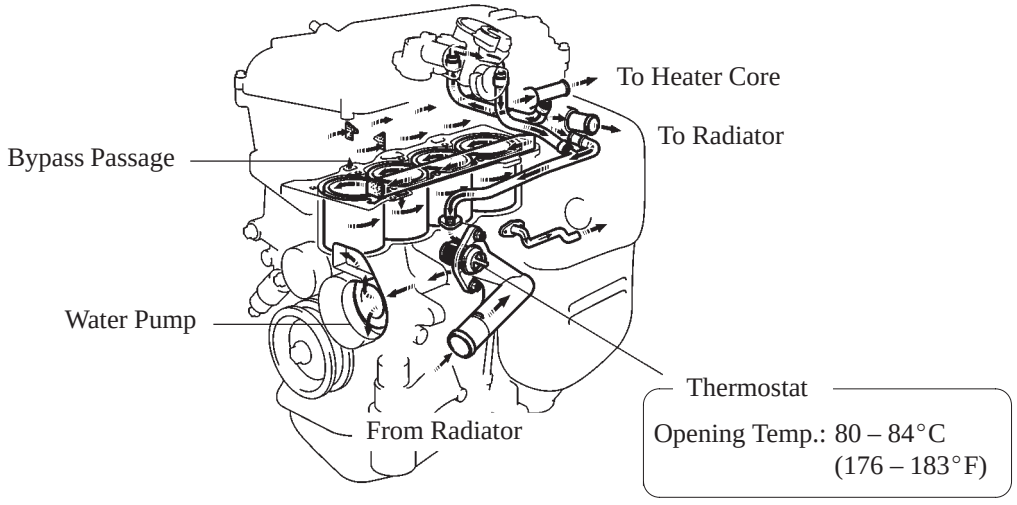

206EG11

▶ Specification ◀

Capacity liters (US qts, Imp. qts)	LHD	MT	6.0 (6.3, 5.3)
		AT	6.3 (6.7, 5.5)
	RHD	MT	6.1 (6.4, 5.4)
		AT	6.4 (6.8, 5.6)
Type	TOYOTA Genuine Super Long Life Coolant or equivalent		

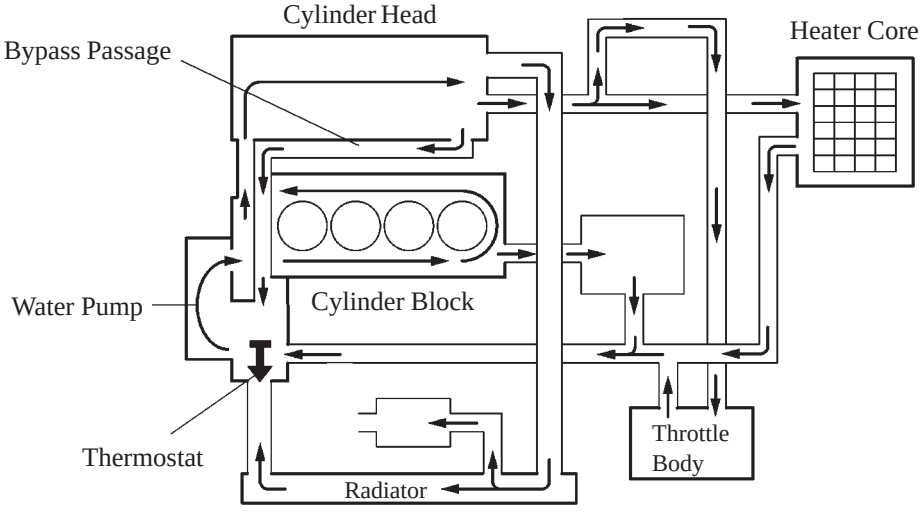

206EG12

2. Radiator

An air bleeder cock has been provided on top of the radiator to improve the efficiency of changing the engine coolant.

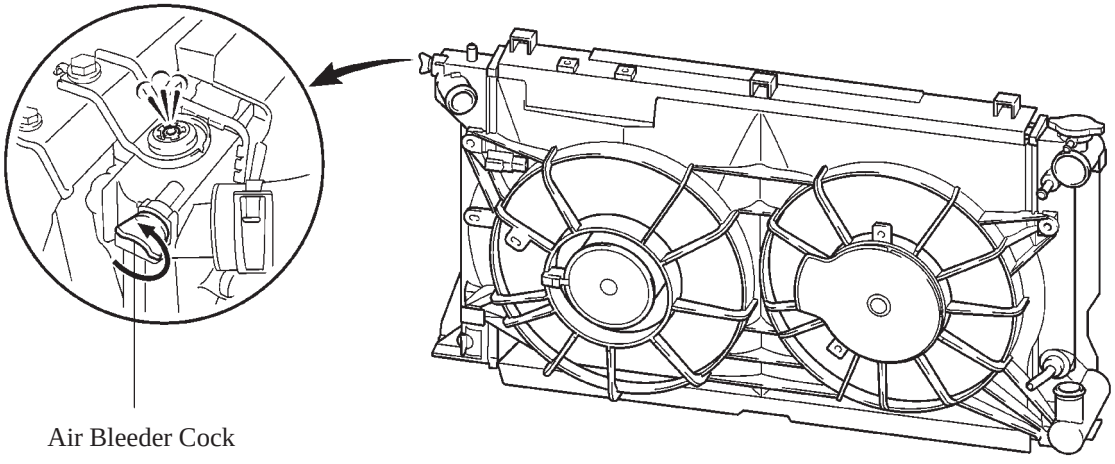

240EG34

■INTAKE AND EXHAUST SYSTEM

1. General

- The intake manifold has been made of plastic to reduce the weight and the amount of heat transferred from the cylinder head. As a result, it has become possible to reduce the intake air temperature and improve the intake volumetric efficiency.
- A resonator is installed inside the air intake chamber which makes use of the intake pulse to improve torque in the mid-speed range.
- Throttle body mesh is used in between the throttle body and the intake manifold to improve the flow of air within the intake manifold.
- A resonator has been provided in the intake pipe to reduce air intake noise.
- A spherically plated throttle valve has been adopted on the manual transmission models for Europe.
- The material of the air cleaner case clamps has been changed from the metal to plastic. As a result, recyclability has been improved (See page EG-19).

Intake Manifold

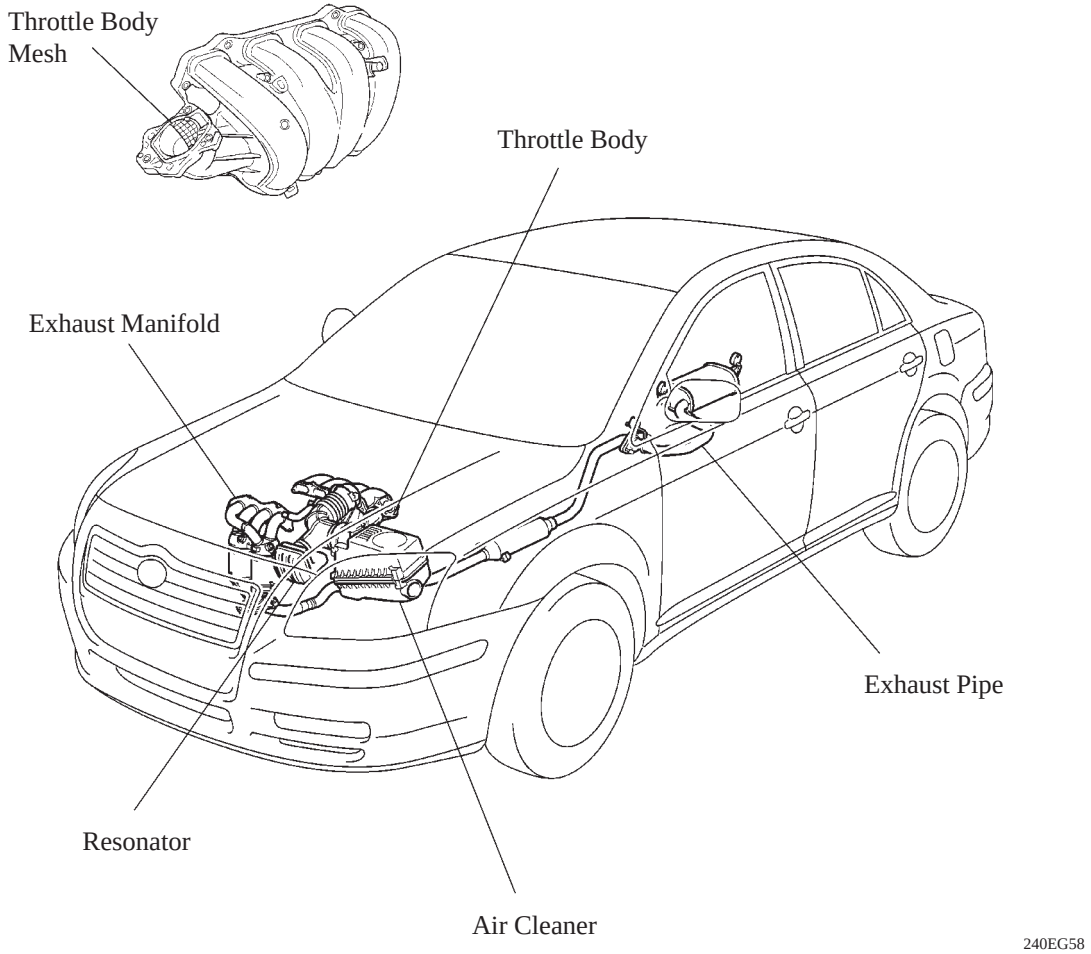

2. Throttle Body

- A spherical-plated throttle valve adds a spherical curve to the intake air volume, which improves the drivability of the vehicle during the initial phase of the throttle valve opening process.
- This allows for easy acceleration pedal control and improved acceleration feel.

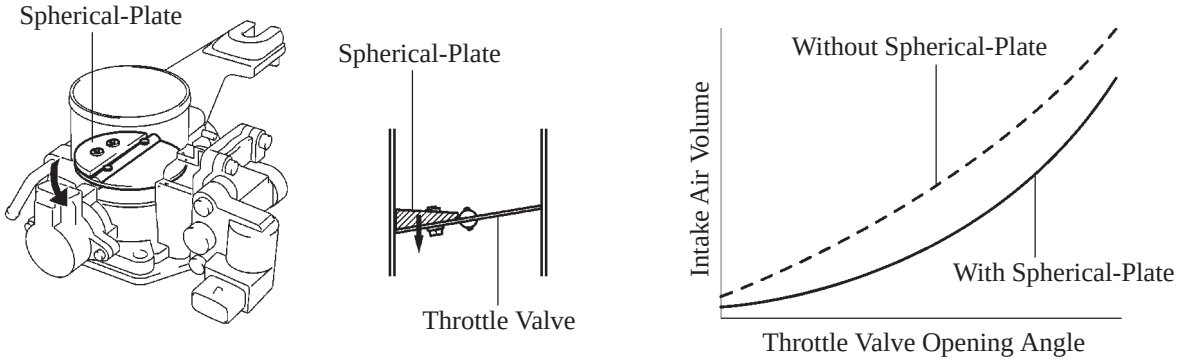

206EG14 181EG23

3. Exhaust manifold

- A stainless steel exhaust manifold is used for weight reduction.
- A unleaded gasoline engine has been provided two air-fuel ratio sensors and two heated oxygen sensors on the exhaust manifold.
- An ultra thin-wall, high-cell density ceramic type TWC has been adopted on the unleaded gasoline. This TWC enables to improve exhaust emissions by optimizing the cells density and the wall thickness.

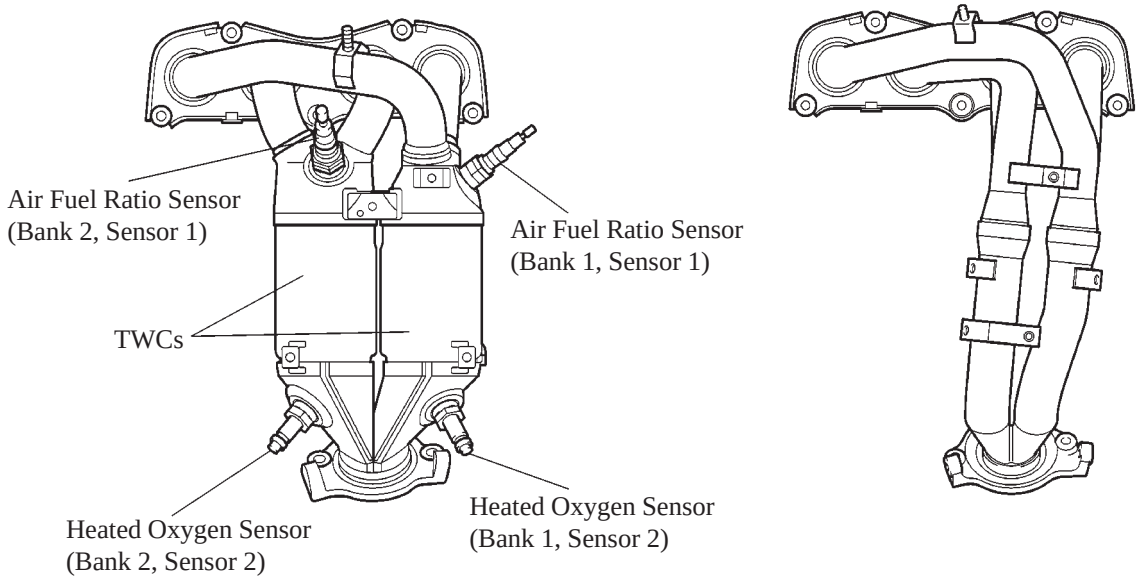

For Unleaded Gasoline **For Leaded Gasoline**

240EG12

▶ TWC (Three-Way Catalytic Converter) ◀

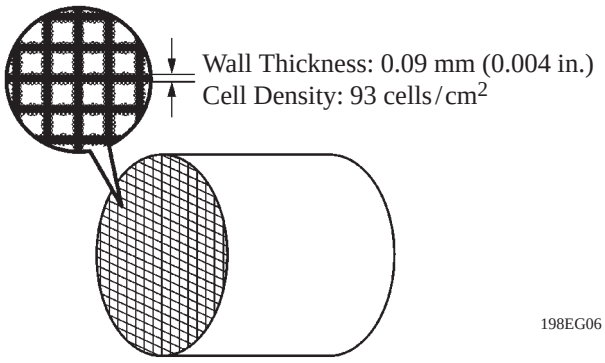

4. Exhaust Pipe

This exhaust pipe uses two ball joints in order to achieve a simple construction and ensured reliability.

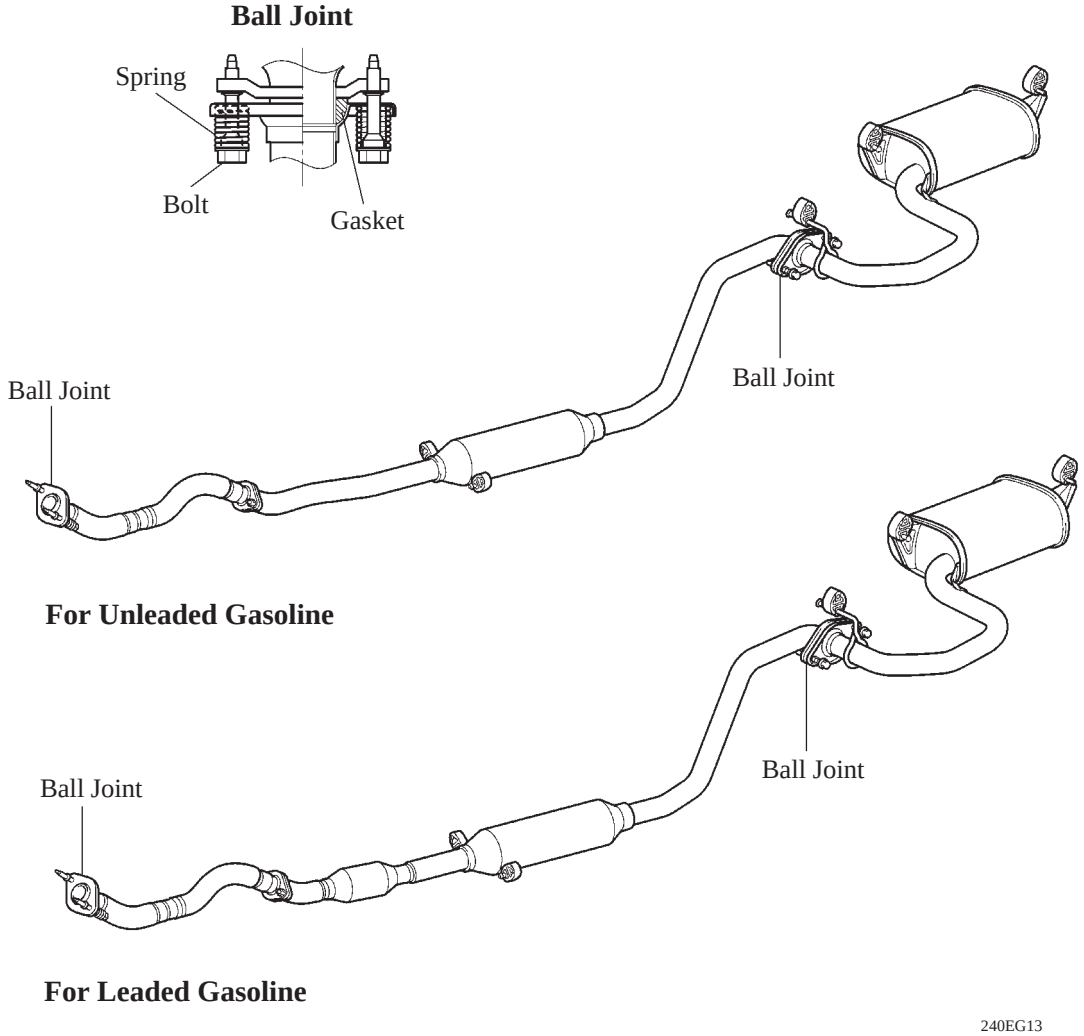

■FUEL SYSTEM

1. General

- The fuel returnless system has been adopted to reduce evaporative emissions.
- A fuel cut control has been adopted to stop the fuel pump when the SRS airbag is deployed in a front or side collision. For details, see page EG-41.
- A quick connector has been adopted to connect the fuel pipe with the fuel hose to improve serviceability.
- The fuel pump designed for plastic fuel tank has been adopted. It is compact type with integrated fuel filter, pressure regulator, fuel sender gauge and fuel cutoff valve. (See page EG-21)
- To improve rust resistance, the material of the fuel tank has been changed from metal to plastic. This eliminates plating, as well as the use of lead, in consideration of the environment. (See page EG-20)
- The 12-hole type injector is used on the engine for unleaded gasoline.
- The 4-hole type injector is used on the engine for leaded gasoline.

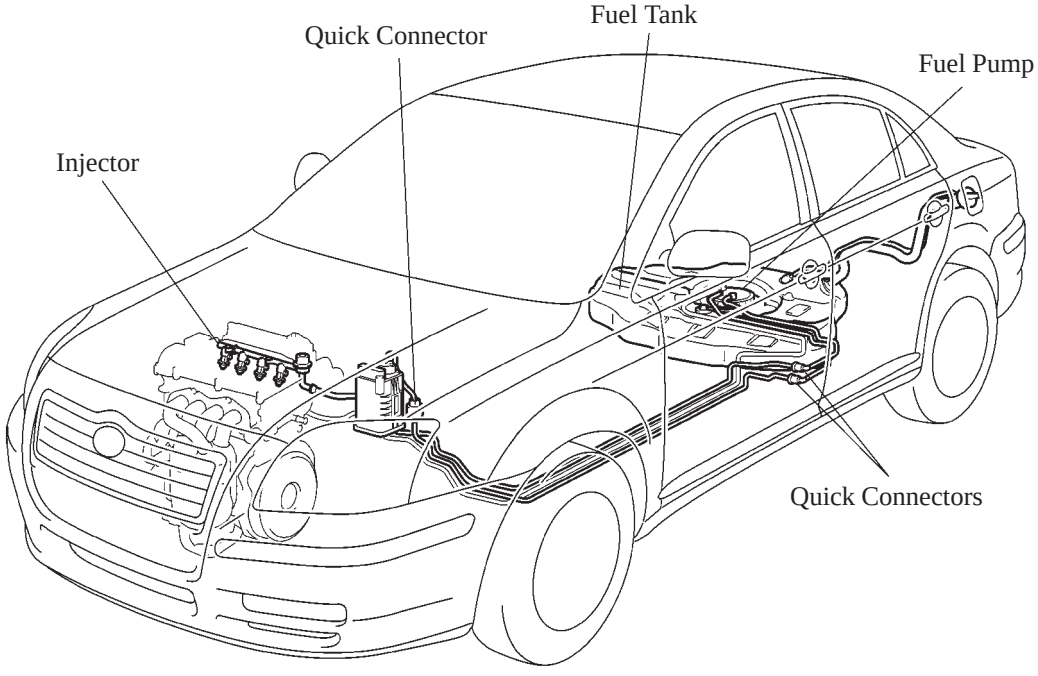

240EG60

▶ Injector ◀

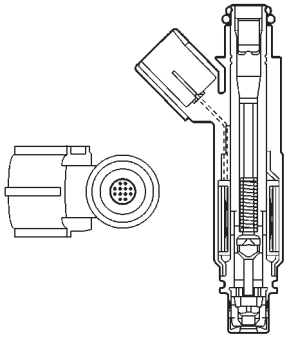

185EG04

12-Hole Type
(For Unleaded Gasoline)

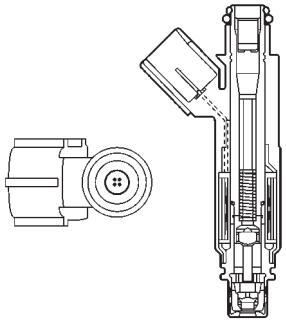

240EG11

4-Hole Type
(For Leaded Gasoline)

2. Fuel Returnless System

This system has been adopted to reduce the evaporative emission. As show below, integrating the fuel filter, pressure regulator, and fuel sender gauge with fuel pump assembly it possible to discontinue the return of fuel from the engine area and prevent temperature rise inside the fuel tank.

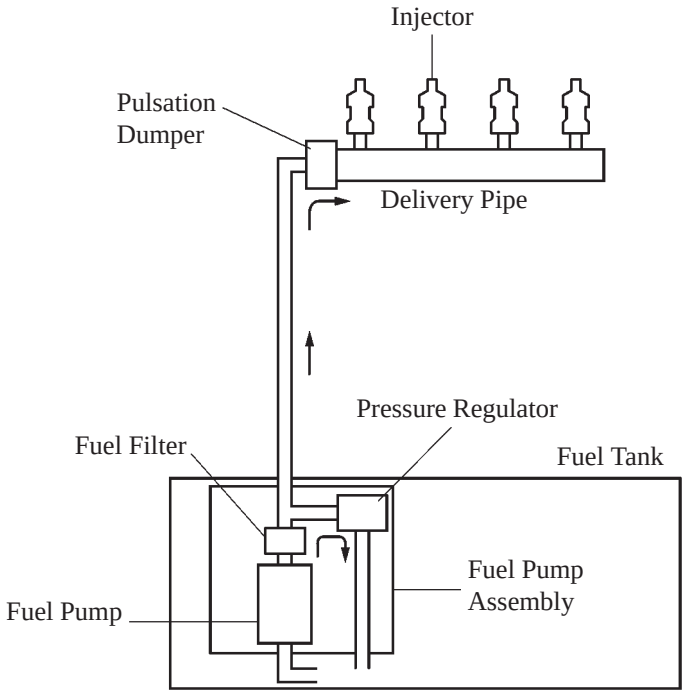

185EG16

■IGNITION SYSTEM

1. General

- A DIS (Direct Ignition System) is used. The DIS improves the ignition timing accuracy, reduces high-voltage loss, and enhances the overall reliability of the ignition system by eliminating the distributor.
- The DIS in this engine is an independent ignition system which has one ignition coil (with igniter) for each cylinder.
- A fuel the DIS provides 4 ignition coils, one for each cylinder. The spark plug caps, which provide contact to the spark plugs, are integrated with an ignition coil. Also, an igniter is enclosed to simplify the system.

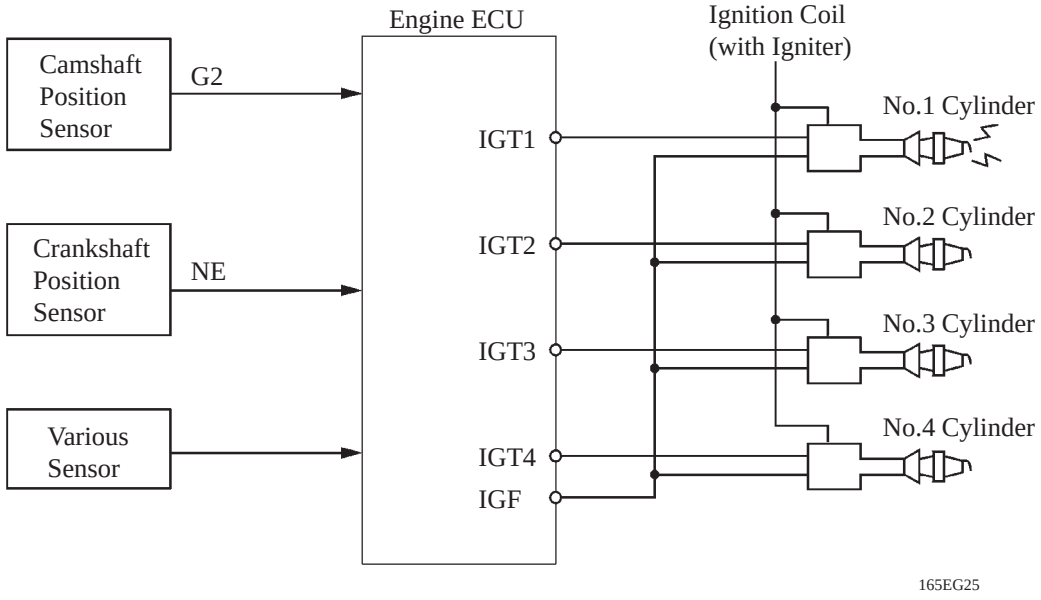

2. Spark Plug

- Iridium-tipped spark plugs are used in the unleaded gasoline engine to improve ignition performance while maintaining the same durability of the platinum-tipped spark plugs.
- Conventional spark plugs are used in the leaded gasoline engine.

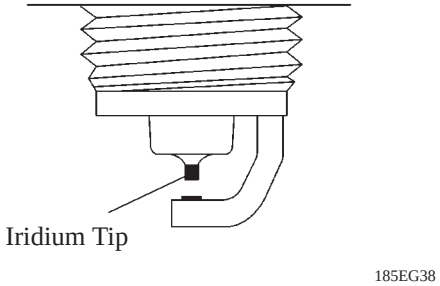

Iridium-tipped Spark Plug

For Unleaded Gasoline	DENSO	SK20R11
	NGK	IFR6A11
	Plug Gap	1.0 – 1.1 mm (0.039 – 0.043 in.)
For Leaded Gasoline	DENSO	K20R-U11
	NGK	BKR6EYA11
	Plug Gap	1.0 – 1.1 mm (0.039 – 0.043 in.)

■STARTING SYSTEM

The planetary reduction type starter with the interpolar magnet has been adopted.

- For details of this starter, refer to page EG-23.

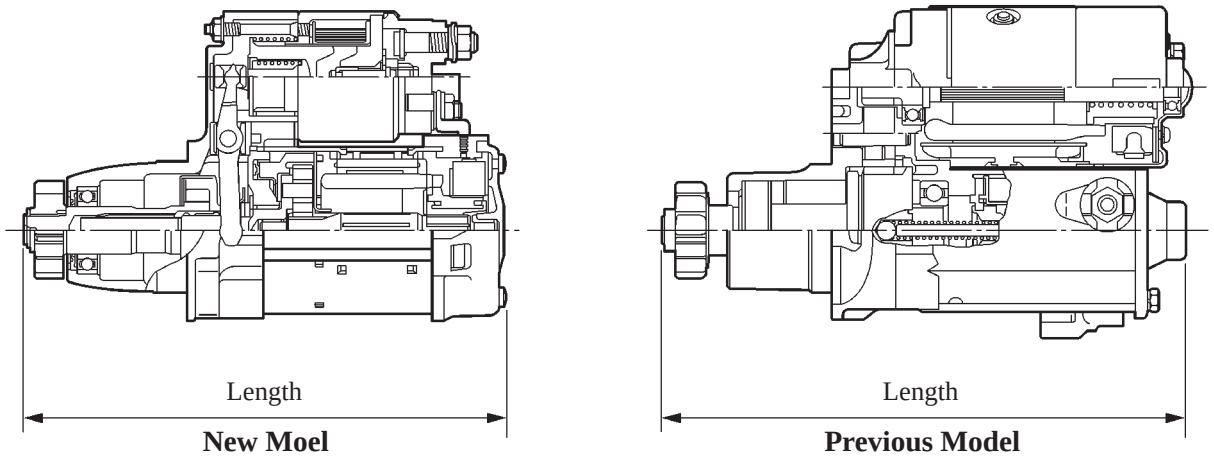

▶ Specification ◀

Model	New Model	Previous Model
Length	202 mm (7.95 in.)	216 mm (8.50 in.)
Weight g (lb)	2850 (100.5)	3950 (139.3)
Rating Voltage	12 V	12 V
Rating Output	1.3 kW	1.0 kW
Rotating of Direction	Counterclockwise*	Counterclockwise*

*: Viewed from Pinion Side

■ SERPENTINE BELT DRIVE SYSTEM

- Accessory components are driven by a serpentine belt consisting of a single V-ribbed belt. It reduces the overall engine length, weight and number of engine parts.
- An automatic tensioner eliminates the need for tension adjustment.

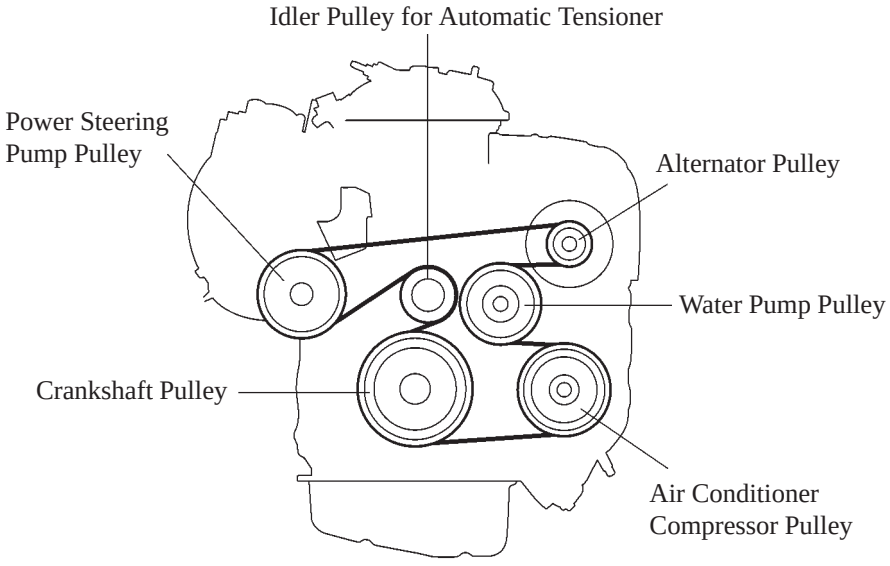

240EG98

■ENGINE CONTROL SYSTEM

1. General

The engine control system for 1AZ-FE engine has following features.

System	Outline	Unleaded Gasoline	Leaded Gasoline
EFI (Electronic Fuel Injection)	● An L-type EFI system directly detects the intake air volume with a hot-wire type air flow meter. ● The fuel injection system is a sequential multiport fuel injection system.	○	○
ESA (Electronic Spark Advance)	Ignition timing is determined by the engine ECU based on signals from various sensors. The engine ECU corrects ignition timing in response to engine knocking.	○	○
ISC (Idle Speed Control)	A rotary solenoid type ISC valve controls the fast idle and idle speeds.	○	○
VVT-i (Variable Valve Timing-intelligent) [See page EG-75]	Controls the intake camshaft to an optimal valve timing in accordance with the engine condition.	○	—
Fuel Pump Control [See page EG-41]	● Fuel pump operation is controlled by signals from the engine ECU. ● The fuel pump is stopped, when the SRS airbag is deployed in a front or side collision.	○	○
Air Fuel Ratio Sensor, Oxygen Sensor Heater Control [See page EG-74]	Maintains the temperature of the air fuel ratio sensor and oxygen sensor at an appropriate level to increase accuracy of detection of the oxygen concentration in the exhaust gas.	○	—
Evaporative Emission Control	The engine ECU controls the purge flow of evaporative emissions (HC) in the charcoal canister in accordance with engine conditions.	○	○
Air Conditioner Cut-off Control	By turning the air conditioner compressor ON or OFF in accordance with the engine condition, drivability is maintained.	○	○
Cooling Fan Control [See page EG-79]	Radiator cooling fan operation is controlled by signals from engine ECU based on the water temperature sensor signal (THW) and the condition of the air conditioner operation.	○	○
Engine Immobiliser*	Prohibits fuel delivery and ignition if an attempt is made to start the engine with an invalid ignition key.	○	—
Diagnosis [See page EG-80]	When the engine ECU detects a malfunction, the engine ECU diagnoses and memorizes the failed section.	○	○
Fail-Safe [See page EG-80]	When the engine ECU detects a malfunction, the engine ECU stops or controls the engine according to the data already stored in memory.	○	○

*: with Engine Immobiliser

2. Construction

The configuration of the engine control system is as shown in the following chart.

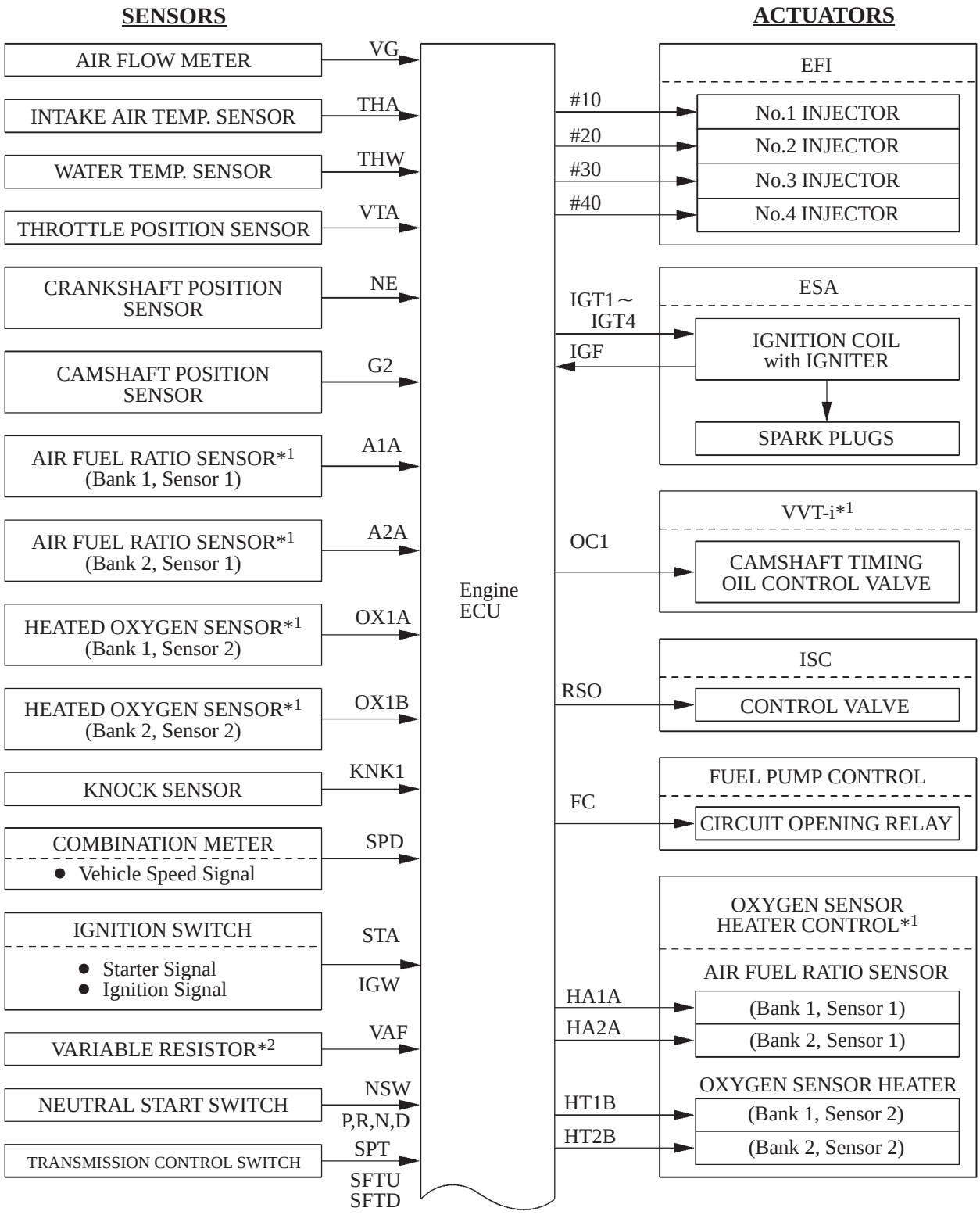

(Continued)

240EG78

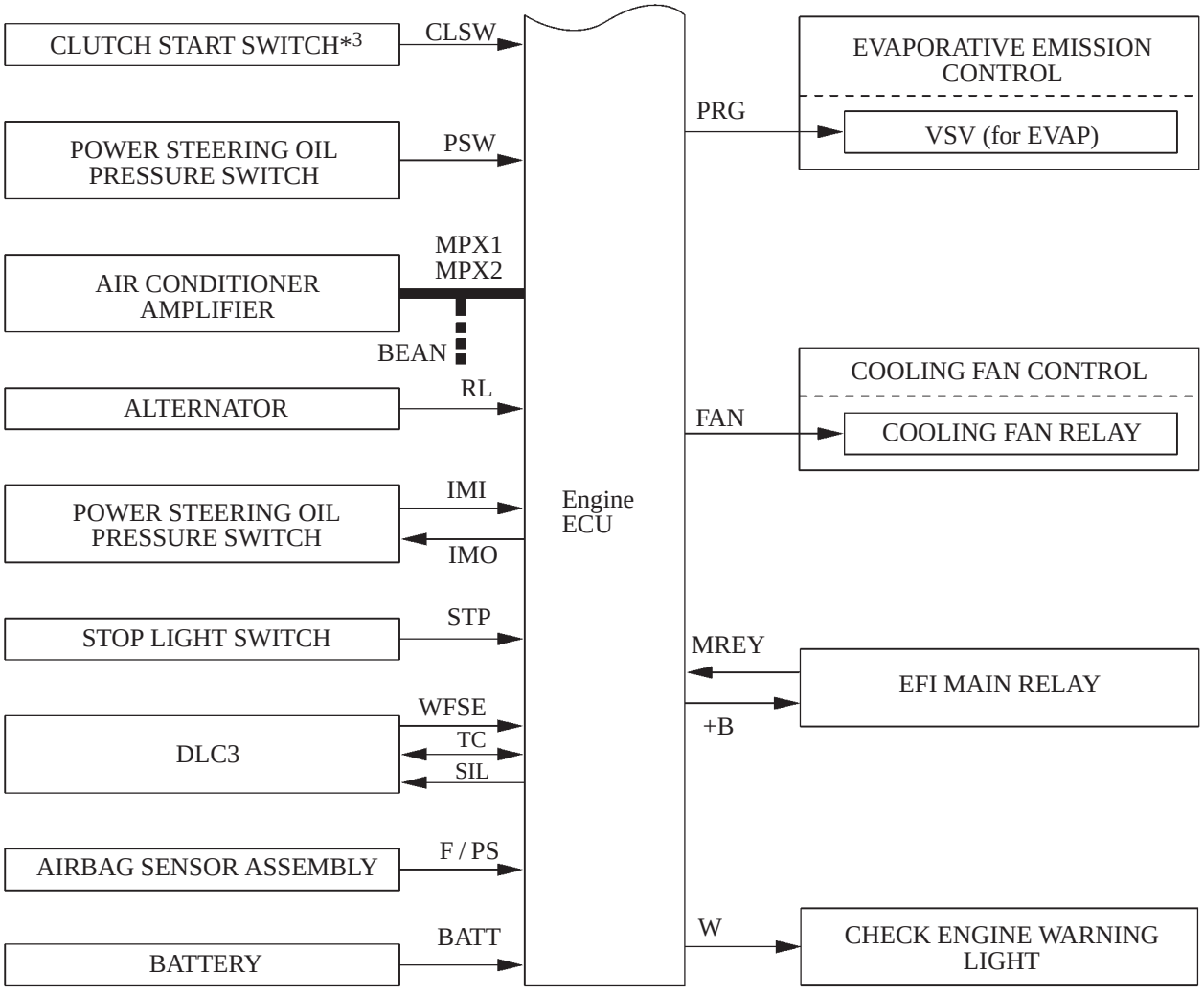

240EG79

*1: For Unleaded Gasoline
*2: For Leaded Gasoline
*3: Only for Manual Transaxle Model

3. Engine Control System Diagram

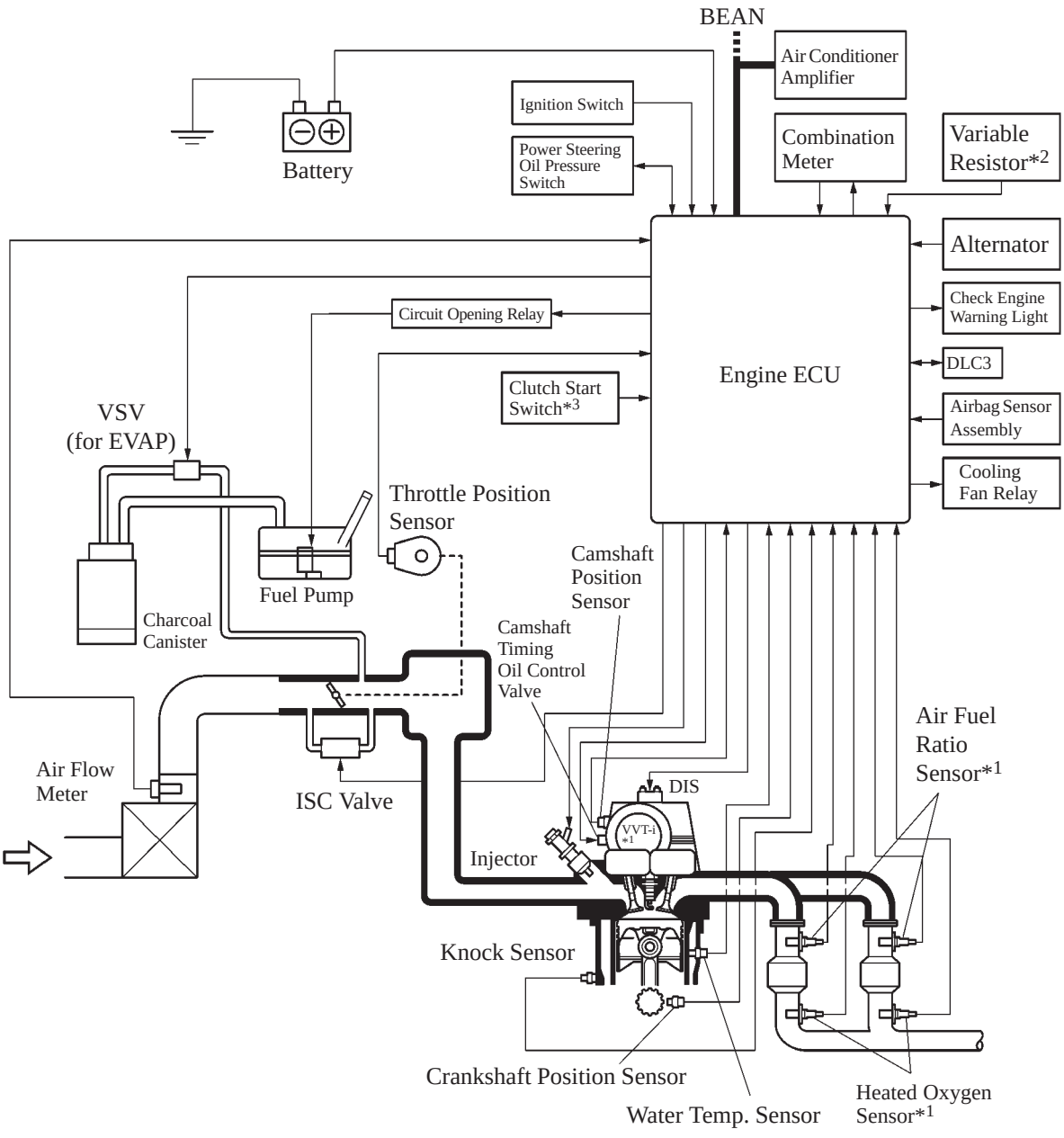

*1: For Unleaded Gasoline
*2: For Leaded Gasoline
*3: Only for Manual Transaxle Model

240EG80

EG

4. Layout of Main Components

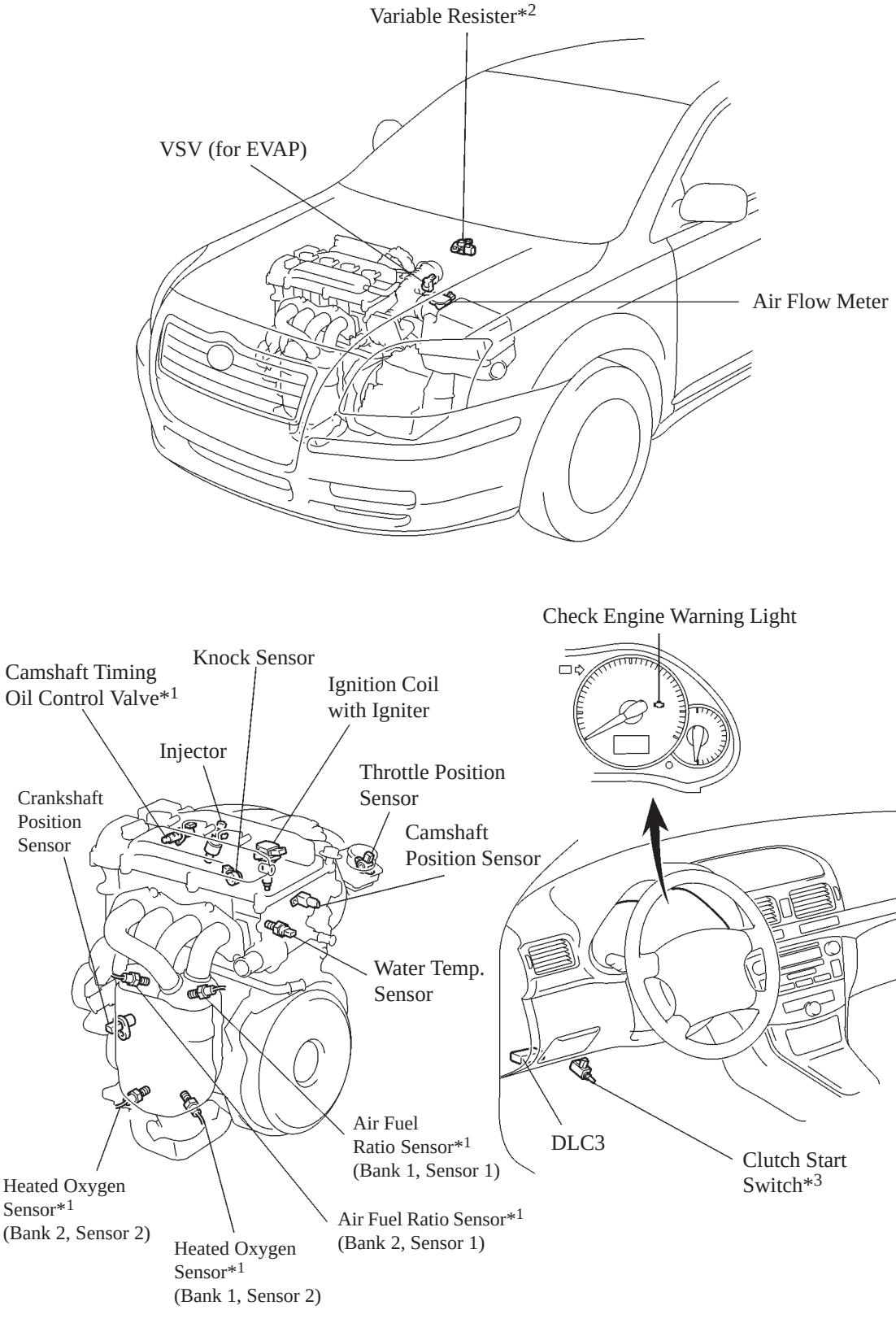

*1: For Unleaded Gasoline
*2: For Leaded Gasoline
*3: Only for Manual Transaxle Model

5. Main Components of Engine Control System

General

The main components of the 1AZ-FE engine control system are as follows:

Components		Outline	Quantity
Engine ECU		32-bit	1
Air Flow Meter		Hot-Wire Type	1
Crankshaft Position Sensor (Rotor Teeth)		Pick-Up Coil Type (36-2)	1
Camshaft Position Sensor (Rotor Teeth)		Pick-Up Coil Type (3)	1
Throttle Position Sensor		Linear Type	1
Knock Sensor (See page EG-33)		Built-in Piezoelectric Element Type (Flat Type)	1
Air Fuel Ratio Sensor* (Bank 1, Sensor 1) (Bank 2, Sensor 1)		Type with heater	2
Oxygen Sensor* (Bank 1, Sensor 2) (Bank 2, Sensor 2)		Type with heater	2
Injector	Unleaded Gasoline Engine	12-Hole Type	4
	Leaded Gasoline Engine	4-Hole Type	
ISC Valve		Rotary Solenoid Type (1-Coil Type)	1

*: for Unleaded Gasoline

Engine ECU

The 32-bit CPU of the engine ECU has been changed from the 16-bit CPU to increase the speed for processing the signals.

Service Tip

The length of time to clear the DTC via the battery terminal has been changed from the previous 10 seconds to 1 minute.

Air Fuel Ratio Sensor

As illustrated below, the conventional oxygen sensor is characterized by a sudden change in its output voltage at the threshold of the stoichiometric air-fuel ratio (14.7 : 1). In contrast, the air-fuel ratio sensor outputs a voltage that is approximately proportionate to the existing air-fuel ratio by converting the oxygen density to the voltage. As a result, the detection precision of the air-fuel ratio has been improved.

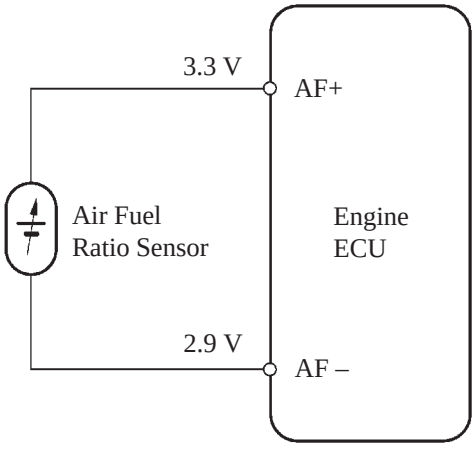

185EG43

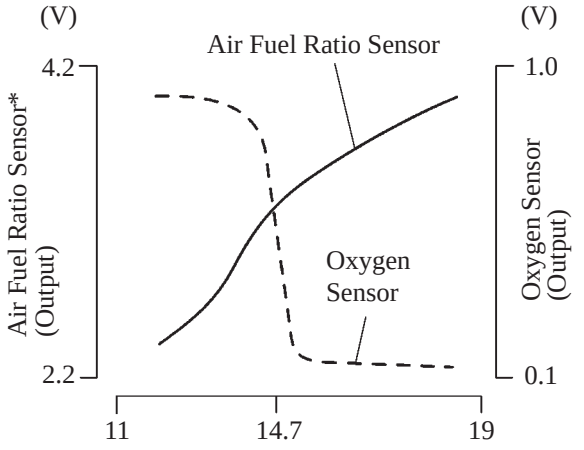

185EG44

*: This calculation value is used internally in the ECU, and is not an ECU terminal voltage.

6. VVT-i (Variable Valve Timing-intelligent) System

General

- The VVT-i system is designed to control the intake camshaft within a range of 50° (of Crankshaft Angle) to provide valve timing that is optimally suited to the engine condition. This improves torque in all the speed ranges as well as increasing fuel economy, and reducing exhaust emissions.

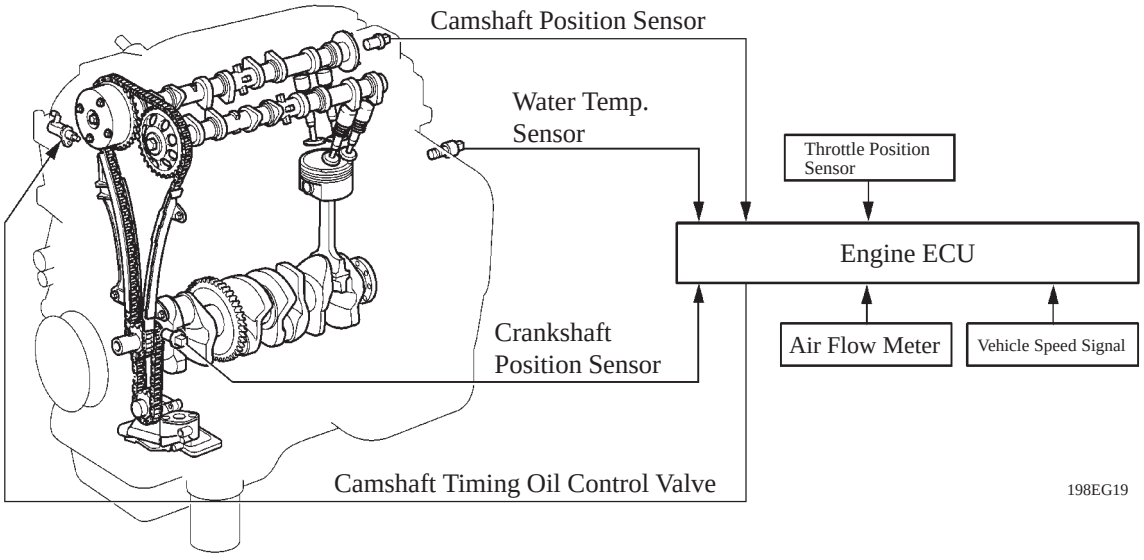

- Using the engine speed, intake air volume, throttle position and water temperature, the engine ECU can calculate optimal valve timing for each driving condition and controls the camshaft timing oil control valve. In addition, the engine ECU uses signals from the camshaft position sensor and the crankshaft position sensor to detect the actual valve timing, thus providing feedback control to achieve the target valve timing.

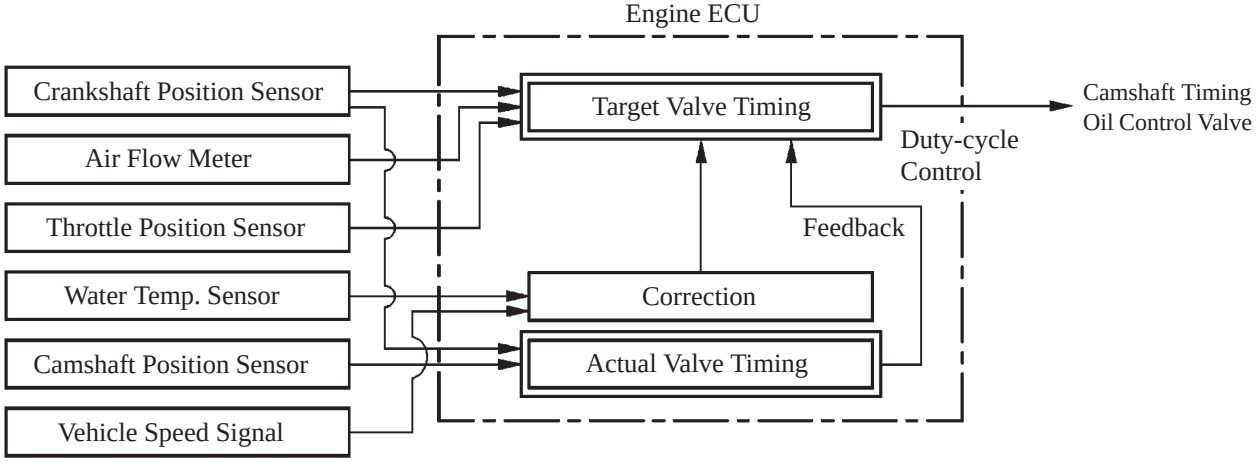

Effectiveness of the VVT-i System

Operation State	Objective	Effect
• During Idling • At Light Load	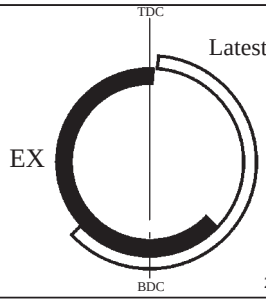 Losing overlap to prevent blow back to the intake side	• Stabilized idling rpm • Better fuel economy
At Medium Load	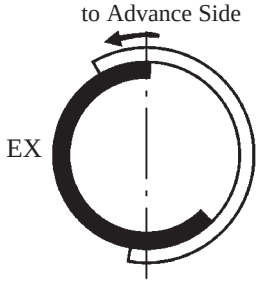 Increasing overlap to increase internal EGR to reduce pumping loss	• Better fuel economy • Improved emission control
In Low to Medium Speed Range with Heavy Load	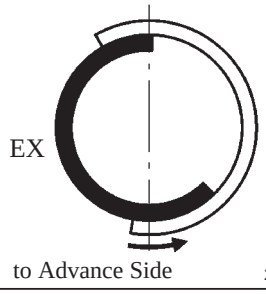 Advancing the intake valve close timing for volumetric efficiency improvement	Improved torque in low to medium speed range
In High Speed Range with Heavy Load	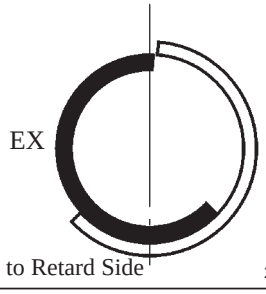 Retarding the intake valve close timing for volumetric efficiency improvement	Improved output
At Low Temp.	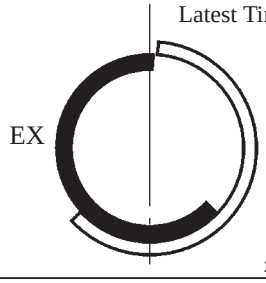 Losing overlap to prevent blow back to the intake side leads to the lean burning condition, and stabilizes the idling speed at fast idle	• Stabilized fast idle rpm • Better fuel economy
• Upon Starting • Stopping the Engine	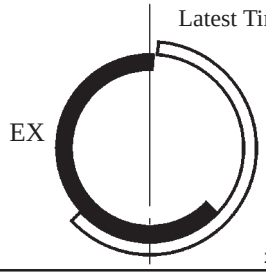 Losing overlap to prevent blow back to the intake side	Improved startability

Construction

1) VVT-i Controller

This controller consists of the housing driven from the timing chain and the vane coupled with the intake camshaft.
The oil pressure sent from the advance or retard side path at the intake camshaft causes rotation in the VVT-i- controller vane circumferential direction to vary the intake valve timing continuously.
When the engine is stopped, the intake camshaft will be in the most retarded state to ensure startability.
When hydraulic pressure is not applied to the VVT-i controller immediately after the engine has been started, the lock pin locks the movement of the VVT-i controller to prevent a knocking noise.

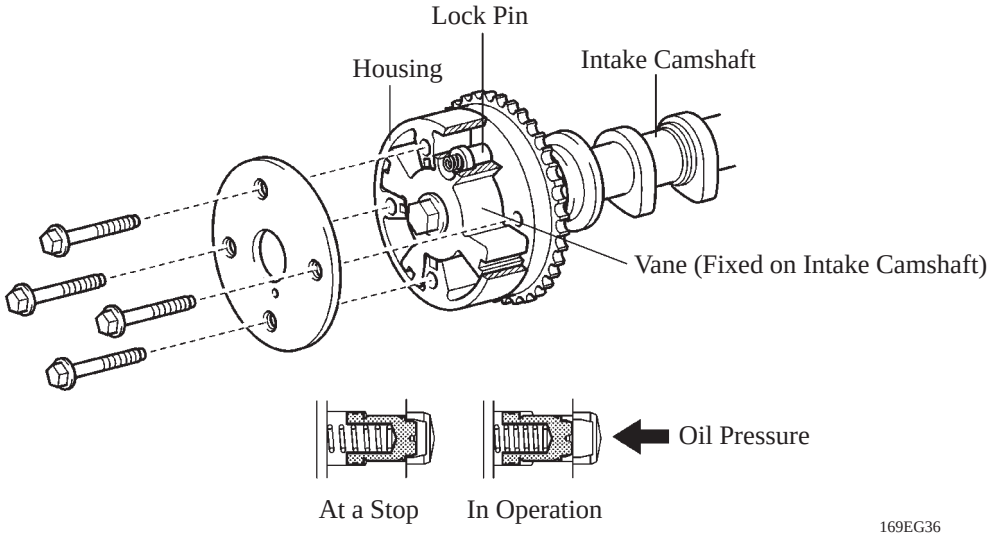

Lock Pin

2) Camshaft Timing Oil Control Valve

The camshaft timing oil control valve controls the spool valve position in accordance with the duty control from the engine ECU thus allocating the hydraulic pressure that is applied to the VVT-i controller to the advance and the retard side. When the engine is stopped, the camshaft timing oil control valve is in the most retarded state.

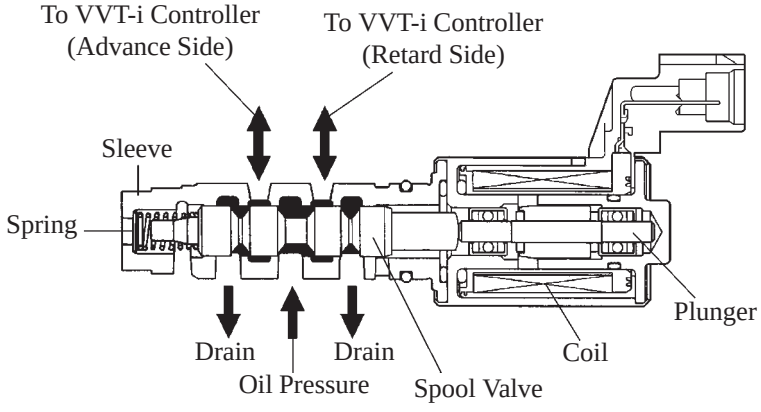

Operation

1) Advance

When the camshaft timing oil control valve is positioned as illustrated below by the advance signal from the engine ECU, the resultant oil pressure is applied to the timing advance side vane chamber to rotate the camshaft in the timing advance direction.

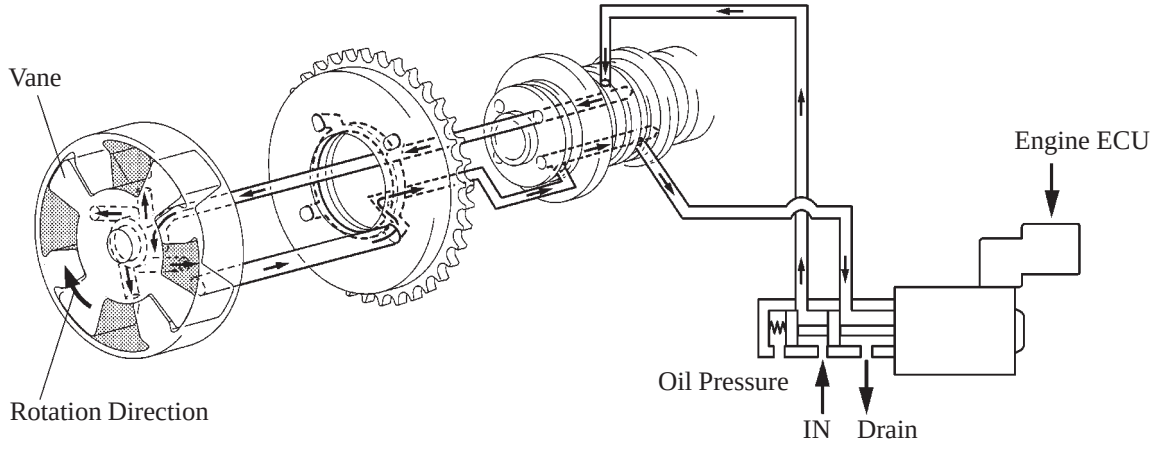

2) Retard

When the camshaft timing oil control valve is positioned as illustrated below by the retard signal from the engine ECU, the resultant oil pressure is applied to the timing retard side vane chamber to rotate the camshaft in the timing retard direction.

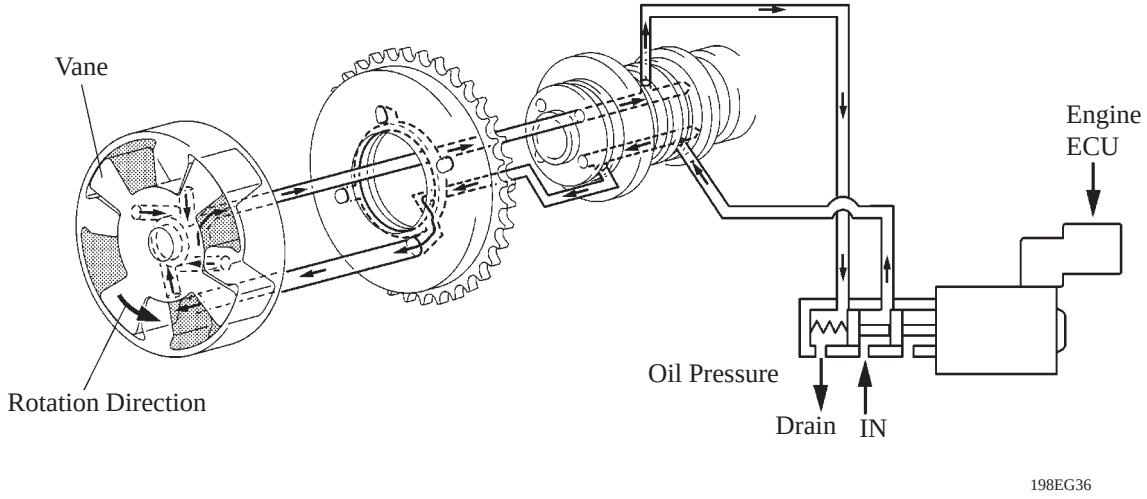

3) Hold

After reaching the target timing, the valve timing is held by keeping the camshaft timing oil control valve in the neutral position unless the traveling state changes.
This adjusts the valve timing at the desired target position and prevents the engine oil from running out when it is unnecessary.

7. Cooling Fan Control

In contrast to the previous electric cooling fan system, the cooling fan main relay and the water temperature switch have been discontinued. Instead, by sharing the water temperature sensor to control the fan motor, a simpler system has been realized.

This cooling fan control turns 3 fan relays ON/OFF in accordance with the water temperature and the operating conditions of the air conditioner system. When it is ON, the control is switched to operate the 2 fan motors at Low (serial) or High (parallel).

▶ Wiring Diagram ◀

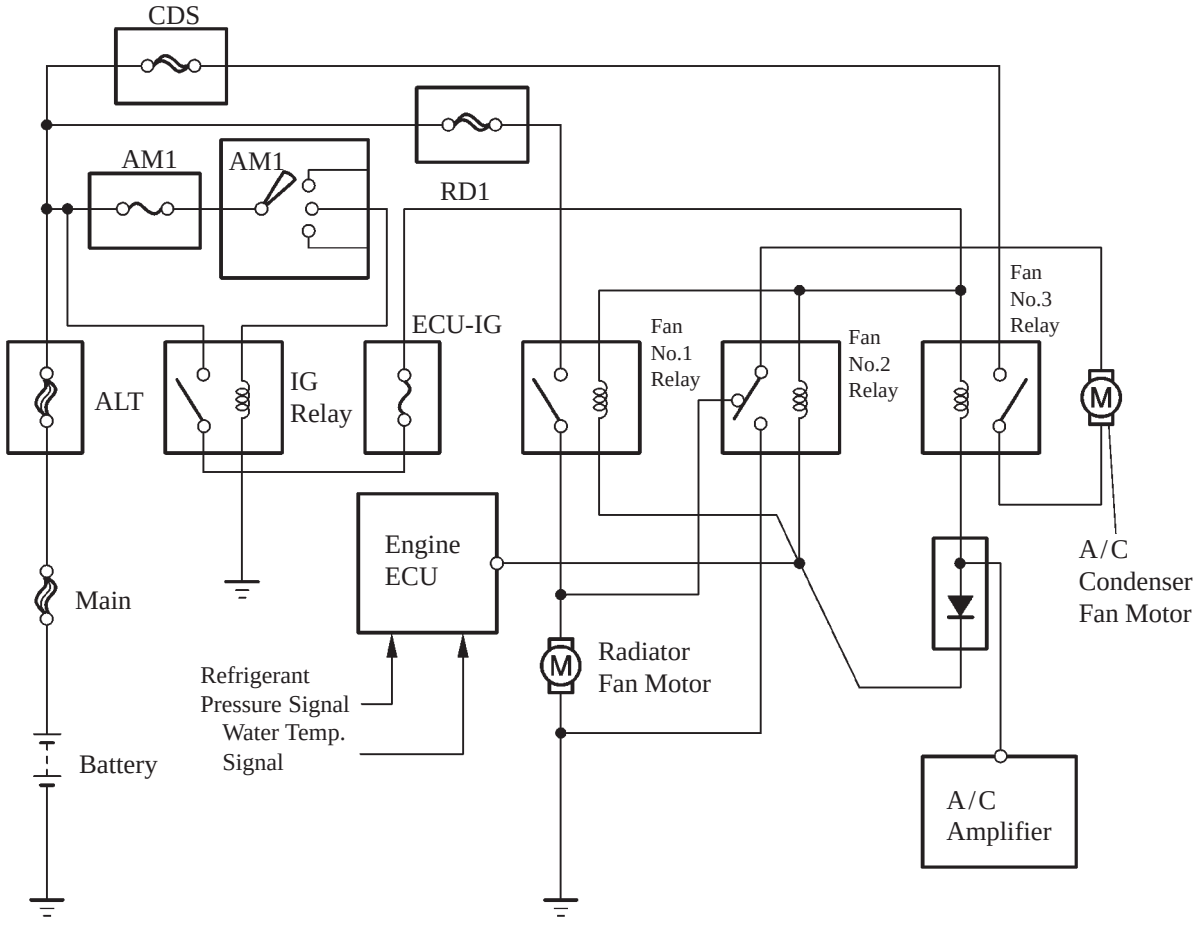

240EG33

▶ Cooling Fan Operation ◀

Air Conditioner Condition		Water Temperature	
Compressor	Refrigerant Pressure	About 83°C (181°F) or Lower	About 90°C (194°F) or Higher
OFF	1.2 MPa (12.5 kgf/cm^2) or Lower	OFF	High
ON	1.2 MPa (12.5 kgf/cm^2) or Lower	Low	High
	1.5 MPa (15.5 kgf/cm^2) or Higher	High	High

8. Diagnosis

- The diagnosis system of the 1AZ-FE engine uses the M-OBD (Multiple On-Board Diagnosis).
- When the Engine ECU detects a malfunction, the Engine ECU makes a diagnosis and memorizes the failed section. Furthermore, the check engine warning light in the combination meter illuminates or blinks to inform the driver.
- At the same time, the DTCs (Diagnostic Trouble Codes) are stored in memory. The DTCs can be read by connecting a hand-held tester.
- For details, see the Avensis Repair Manual (Pub. No. RM1018E).

9. Fail-Safe

When the Engine ECU detects a malfunction, the Engine ECU stops or controls the engine according to the data already stored in the memory as the following condition.

▶ Fail-Safe Control List ◀

DTC	Fail-safe Operation	Fail-safe Deactivation Conditions
P0031/21 P0032/21 P0051/28 P0052/28	The heater circuit in which the abnormality is detected is turned off.	Ignition switch OFF
P0100/31 P0102/31 P0103/31	Ignition timing is calculated from engine speed and a throttle angle.	If the engine ECU detects “Pass” condition, the engine ECU will return to “Normal mode”.
P0110/24 P0112/24 P0113/24	Intake air temperature is fixed at 20°C (68°F).	If the engine ECU detects “Pass” condition, the engine ECU will return to “Normal mode”.
P0115/22 P0117/22 P0118/22	Water temperature is fixed at 80°C (176°F).	If the engine ECU detects “Pass” condition, the engine ECU will return to “Normal mode”.
P0120/41 P0122/41 P0123/41	Fuel cut intermittently while idling.	Returned to normal condition and ignition switch OFF.
P0325/52 P0327/52 P0328/52	Max. timing retardation	Ignition switch OFF
P0351/14 P0352/15 P0353/14 P0354/15	Fuel cut	If the engine ECU detects “Pass” condition, the engine ECU will return to “Normal mode”.

1AZ-FSE ENGINE

■ DESCRIPTION

The 1AZ-FSE TOYOTA D-4 (Direct Injection 4-storoke gasoline engine) is an in-line 4-cylinder, 2.0 litters, 16-valve DOHC engine.
This engine is used direct injection system, high pressure fuel control system and VVT-i (Variable Valve Timing-intelligent) system to realize high performance, fuel economy, clean emission, low noise and low vibration. In addition, it has the ETCS-i (Electronic Throttle Control System-intelligent) to ensure excellent controllability of the vehicle.

- For the main changes made to this engine from the previous model, see page EG-84.

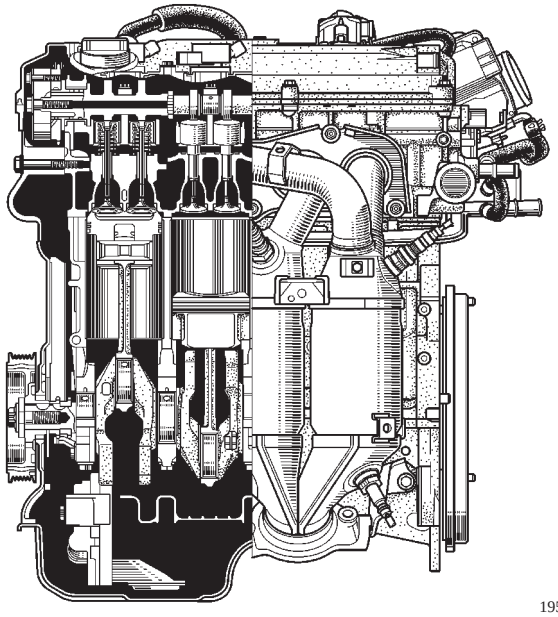

195EG86

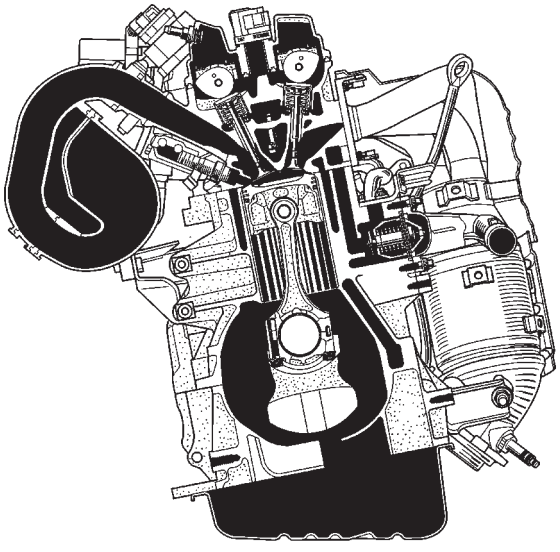

195EG09

— Reference —

TOYOTA D-4 (Direct injection 4-stroke gasoline engine)

- Usual gasoline EFI engine has the injector installed on the intake port and the air and fuel injected inside the intake port is mixed and suctioned into the cylinder.
- TOYOTA D-4 has the injector installed on the combustion chamber, which injects the fuel pressurized in the fuel pump (high pressure) to the combustion chamber directly. With this, vaporized latent heat effect is obtained, then the cubic footage has been improved and the knocking limit has been expanded resulting in the out improvement.

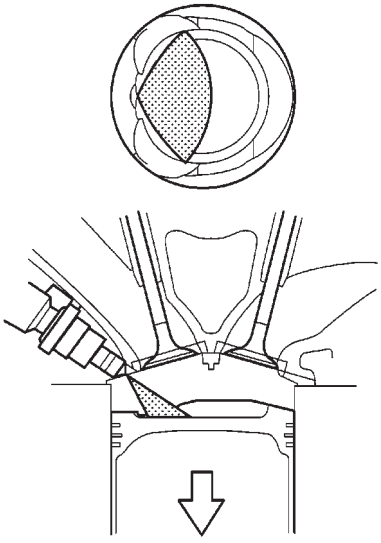

TOYOTA D-4 195EG85

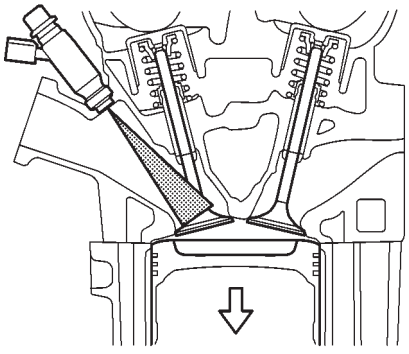

Usual Gasoline EFI 240EG44

- Depending on the driving condition, by injecting the fuel at an optimal timing in the suctioning process, equal air-fuel mixture is uniformed.
- A slit nozzle type injector precisoly controls the quantity of the high pressure fuel and produces a fine-grain atomization to improve the fuel efficiency.

▶ Engine Specification ◀

Model			New	Previous
No. of Cyls. & Arrangement			4-Cylinder, In-line	←
Valve Mechanism			16-Valve DOHC, Chain Drive (with VVT-i)	←
Combustion Chamber			Pentroof Type	←
Manifolds			Cross-Flow	←
Fuel System			EFI D-4 (L-type)	EFI D-4 (D-type)
Ignition System			DIS	←
Displacement cm^3 (cu. in.)			1998 (121.9)	←
Bore x Stroke mm (in.)			86.0 x 86.0 (3.39 x 3.39)	←
Compression Ratio			11.0 : 1	←
Max. Output (EEC)			108 kW @ 5700 rpm	110 kW @ 5700 rpm
Max. Torque (EEC)			196 N·m @ 4000 rpm	200 N·m @ 4000 rpm
Valve Timing	Intake	Open	–12° ~ 41° BTDC	←
		Close	5° ~ 58° ABDC	←
	Exhaust	Open	45° BBDC	←
		Close	3° ATDC	←
Firing Order			1 – 3 – 4 – 2	←
Research Octane Number			95 or higher	←
Oil Grade			API SL, EC or ILSAC	←
Emission Regulation			European STEP IV and European Cold Emission	European STEP III
Engine Service Mass* (Reference) kg (lb)		M/T	130 (286.6)	←
		A/T	124 (273.4)	←

*: Weight shows the figure with oil and water fully filled.

▶ Performance Curve◀

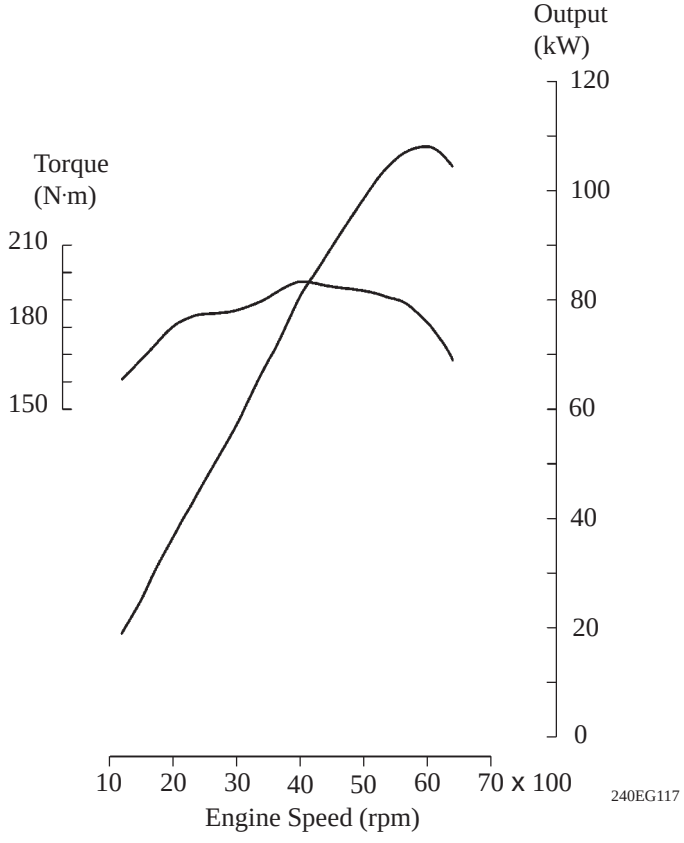

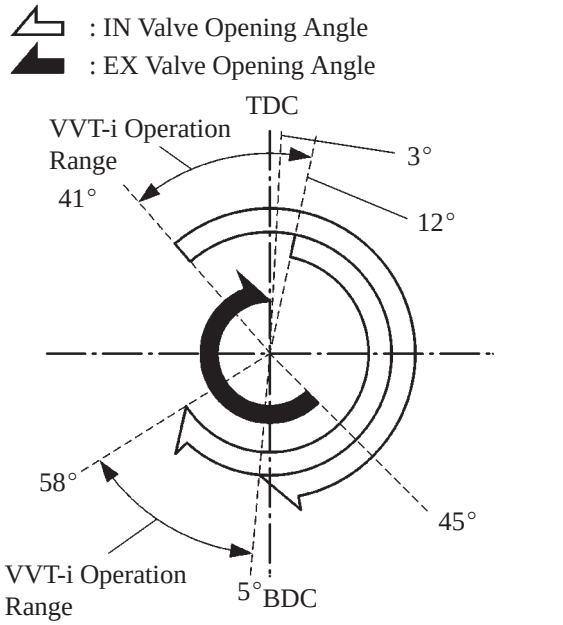

■ MAJOR DIFFERENCE (from Previous Model)

Item	Outline
Lubrication System (See page EG-93)	Adopted service holes for engine oil drain plug and oil filter access.
Cooling System (See page EG-95)	● Added of drain cock for bleeding the radiator. ● The cooling fan circuit is changed.
Intake and Exhaust System (See page EG-97)	● Addition of 2 resonators in the air intake pipe. ● Change to the air cleaner case clamp. (Metal → Plastic) ● Change to the throttle body.
Fuel System (See page EG-99)	Plastic made fuel tank has been addopted.
Starting System (See page EG-107)	The planetary reduction type starter with the interpolar magnet has been adopted.
Engine Control System (See page EG-109)	● Added the air flow meter. ● The purpose of the manifold pressure sensor is changed. ● Added the brake booster pressure sensor. ● The throttle position sensor is changed. (Contact type → No-contact type) ● Adoption of the 32-bit Engine ECU. ● EFI type. (D type → L type) ● Adoption of the TWC (Three-Way Catalytic Converter) warm-up control. ● The DTCs (Diagnostic Trouble Codes) have been further divided to correspond to SAE codes. ● The intake air control is changed.

■FEATURES OF 1AZ-FSE ENGINE

The 1AZ-FSE engine has been able to achieve the following performance through the adoption of the items listed below.

(1) High performance and fuel economy

(2) Low noise and vibration

(3) Lightweight and compact design

(4) Good serviceability

(5) Clean emission

Item		(1)	(2)	(3)	(4)	(5)	New	Previous
Engine Proper	A cylinder block made of aluminum alloy along with a magnesium head cover is used.			○			○	○
	High rigidity cylinder block is used.		○				○	○
	Timing chain and chain tensioner are used.			○	○		○	○
	The VVT-i system is used.	○				○	○	○
Intake And Exhaust System	Intake manifold made of plastic is used.			○			○	○
	A dual TWC (Three-Way Catalytic Converter) and under floor catalytic converter for reducing exhaust emissions during engine warming is used.					○	○	○
	The intake air control system is used.	○				○	○	○
Fuel System	Direct injection is used.	○				○	○	○
	Plastic made fuel Tank has been adopted.			○			○	—
	Quick connectors are used to connect the fuel hose with the fuel pipe.				○		○	○
	Slit nozzle type injectors that support high-pressure fuel injection have been adopted.	○				○	○	○
Ignition System	The DIS (Direct Ignition System) makes ignition timing adjustment unnecessary.					○	○	○
	Iridium-tipped spark plugs is used.	○			○		○	○
Starting System	The planetary reduction type starter with the interpolar magnet has been adopted.			○			○	—

EG

■ENGINE PROPER

1. Cylinder Head Cover

- A lightweight magnesium alloy diecast cylinder head cover is used.
- The fuel pump (high pressure) has been mounted on the cylinder head cover for compactness.
- Acrylic rubber, which excels in heat resistance and reliability, uses for the cylinder head cover gasket.

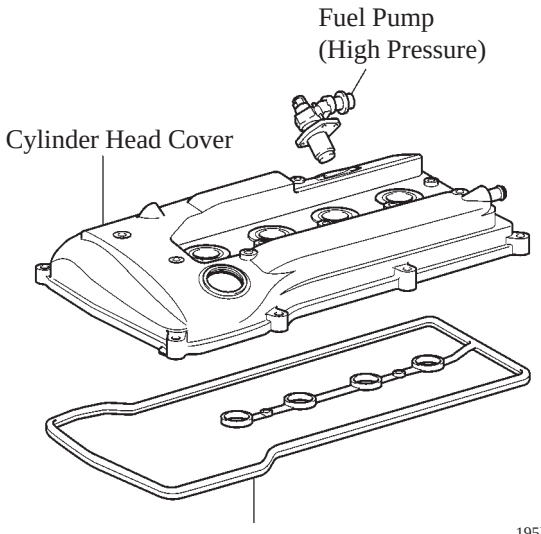

2. Cylinder Head Gasket

A steel-laminate type cylinder head gasket has been adopted.

A shim is use around the cylinder bore to increase the sealing surface, thus improving the sealing performance and durability.

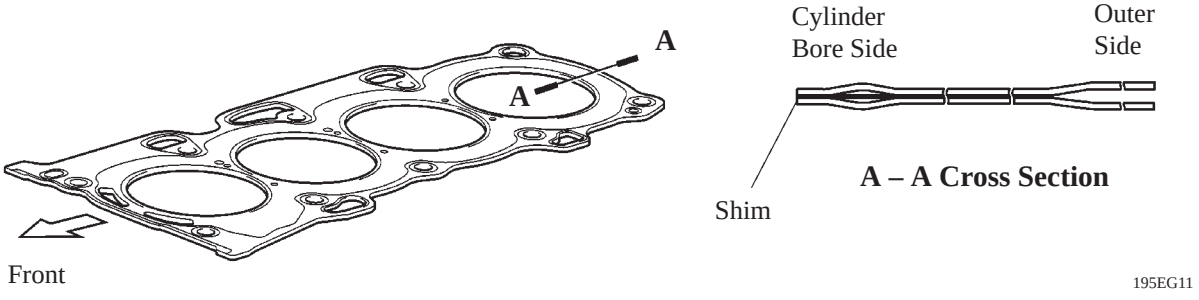

3. Cylinder Head

- Through the adoption of the taper squish combustion chamber, the engine-knocking resistance and fuel efficiency have been improve.
- An upright intake port is used to improve the intake efficiency.
- The injectors are installed in the cylinder head.
- The routing of the water jacket in the cylinder head is optimized to improve the cooling performance. In addition, a water bypass passage has been provided below the exhaust ports to reduce the number of parts and to achieve weight reduction.
- The water outlet has been integrated to reduce the number of parts.

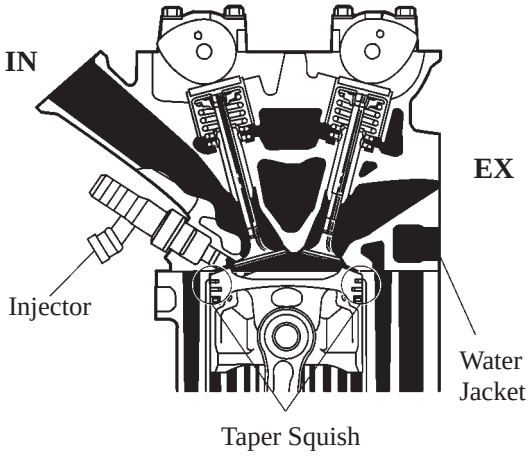

A – A Cross Section

240EG43

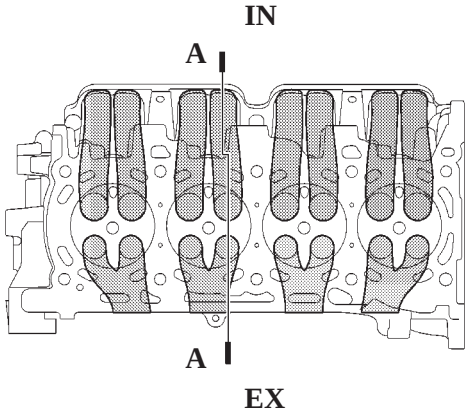

240EG112

4. Cylinder Block

- Lightweight aluminum alloy used for the cylinder block.
- Rigidity of the cylinder block side has been improved by curving the skirt portion of the cylinder block and optimizing the rib position on the side.
- By producing the thin cast-iron liners and cylinder block as a unit, compaction is realized. This liner is thin, so that boring is not possible.
- Passage holes are provided in the crankshaft bearing area of the cylinder block. As a result, the air at the bottom of the cylinder flows smoother, and pumping loss (back pressure at the bottom of the piston generated by the piston's reciprocal movement) is reduced to improve the engine's output.
- The oil filter and the air conditioner compressor bracket are integrated the crankcase, also the water pump swirl chamber, the thermostat housing and the rear oil seal retainer integrated the cylinder block to reduce the number of parts.
- Through the adoption of the offset crankshaft, the bore center has been shifted 10 mm towards the exhaust in relation to the crankshaft center. Thus, the side force when the maximum pressure is applied has been reduced and fuel economy has been improved.
- Plastic region tightening bolts are used for tightening the crank caps.

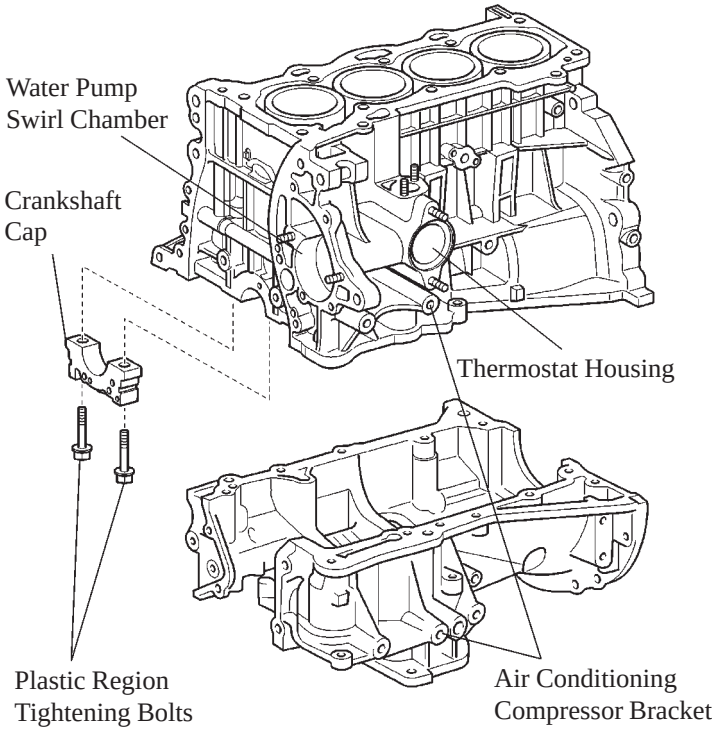

195EG14

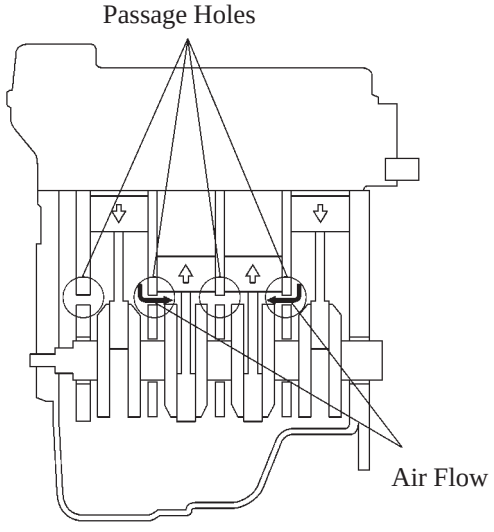

Air Flow During Engine Revolution

179EG04

5. Piston

- To achieve uniform combustion through direct injection, an optimal piston head shape that promotes the mixing of the injected fuel and intake air has been adopted.
- The piston is made of aluminum alloy and skirt area is made compact and lightweight.
- Full floating type piston pins are used.
- The top ring groove is provided with alumite finish to improve its wear resistance.
- The piston skirt has been resin-coated to reduce friction.
- By increasing the machining precision of the cylinder bore diameter, the outer diameter of the piston has been made into the one type.

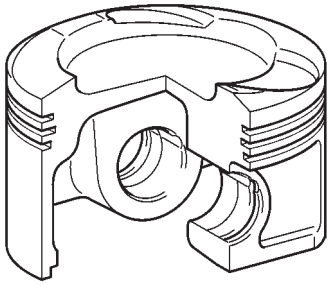

195EG15

6. Connecting Rod

- The connecting rods and cap are made of high strength material for weight reduction.
- Nutless-type plastic region tightening bolts of the connecting rod are adopted for a lighter design.
- The connecting rod bearings have been reduced in width to reduce friction.

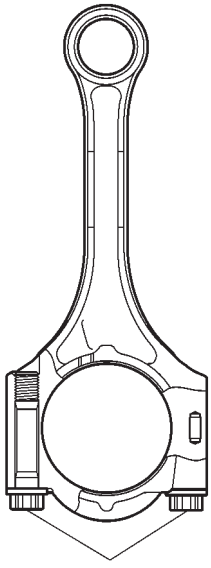

181EG08

Plastic Region Tightening Bolt

7. Crankshaft

- The forged crankshaft has 5 journals and 8 balance weights.
- The crankshaft bearings have been reduced in width to reduce friction.
- The precision and surface roughness of the pins and journals have been improved to reduce friction.

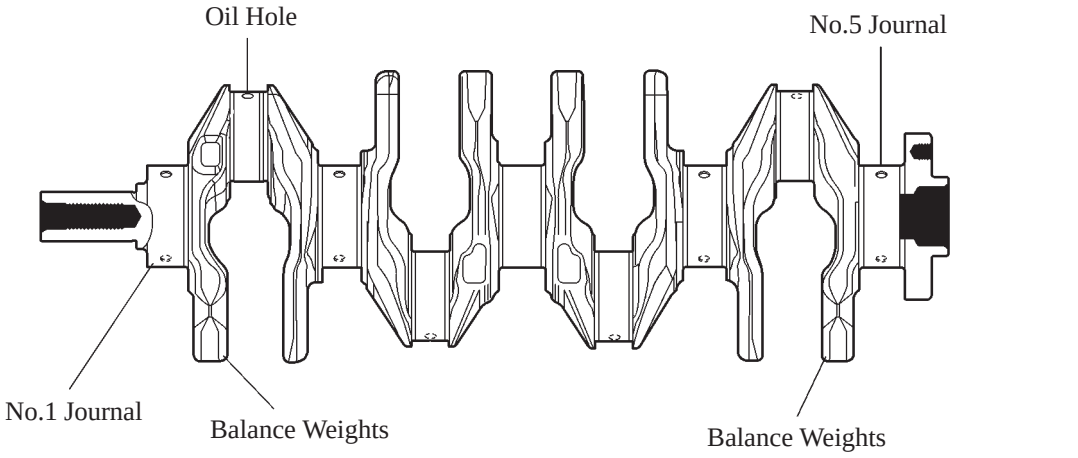

■VALVE MECHANISM

1. General

- The VVT-i (Variable Valve Timing-intelligent) system is used to improve fuel economy, engine performance and reduce exhaust emissions. For details, see page EG-119.
- Along with the increase in the amount of valve lift, the shimless type of valve lifter is used. This valve lifter increases the cam contact surface.

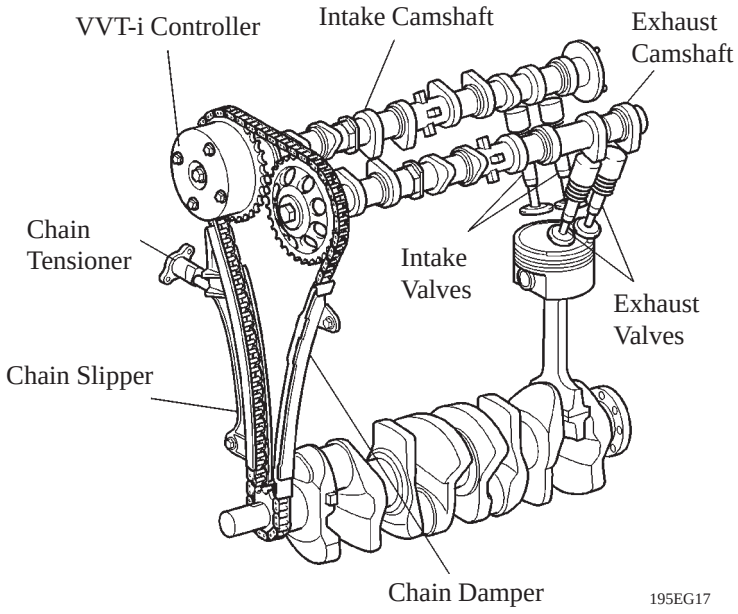

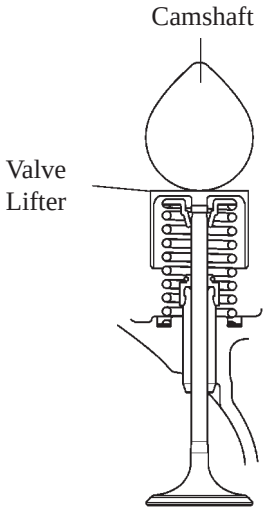

Service Tip

The adjustment of the valve clearance is accomplished by selecting and replacing the appropriate valve lifters. Adjusting valve lifters are available in 35 increments of 0.020 mm (0.0008 in.), from 5.060 mm (0.1992 in.) to 5.740 mm (0.2260 in.).
For details, refer to the Avensis Repair Manual (Pub. No. RM1018E).

EG

2. Camshaft

- The intake camshaft is provided with the timing rotor to trigger the camshaft position sensor, and the cam to drive the fuel pump (high pressure).
- In conjunction with the adoption of the VVT-i system, an oil passage is provided in the intake camshaft in order to supply engine oil pressure to the VVT-i system.
- A VVT-i controller has been installed on the front of the intake camshaft to vary the timing of the intake valves.

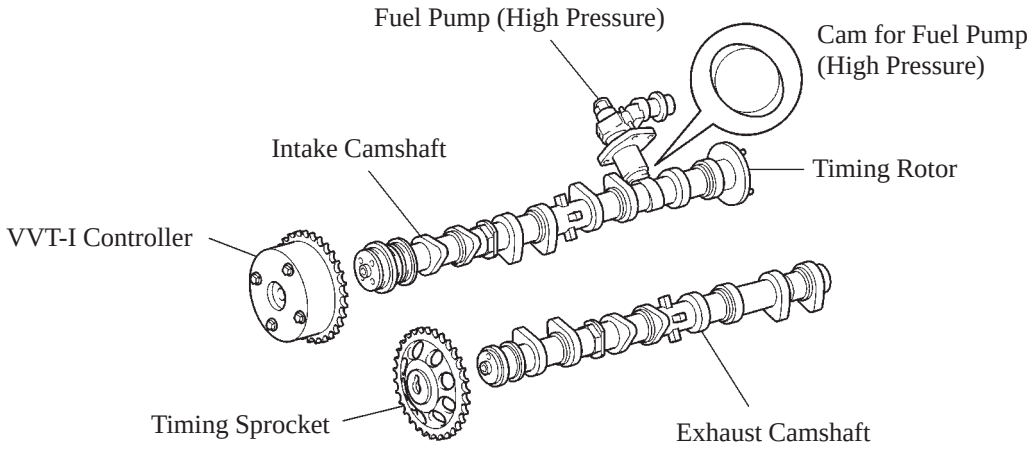

4. Timing Chain and Chain Tensioner

- A roller chain with an 8 mm pitch is used to make the engine more compact.
- The timing chain is lubricated by an oil jet.
- The chain tensioner uses a spring and oil pressure to maintain proper chain tension at all times. The chain tensioner suppresses noise generated by the timing chain.
- A ratchet type non-return mechanism is used.
- To achieve excellent serviceability, the chain tensioner is constructed so that it can be removed and installed from the outside of timing chain cover.

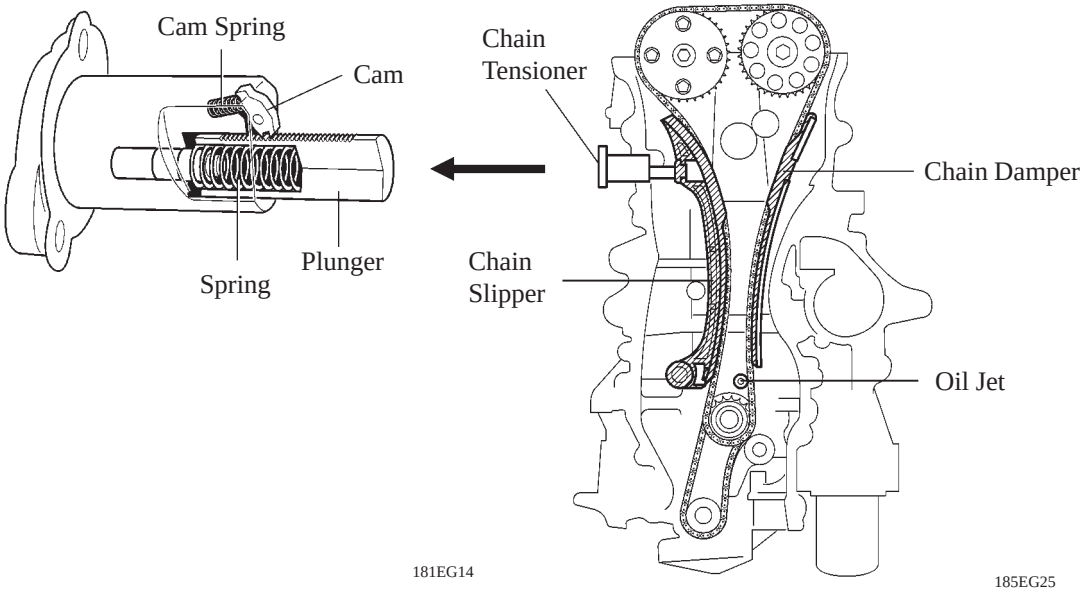

■LUBRICATION SYSTEM

1. General

- The lubrication circuit is fully pressurized and oil passes through an oil filter.
- The trochoidal type oil pump is chain-driven by the crankshaft.
- This engine has an oil return structure in which the oil force-fed to the upper cylinder head returns to the oil pan through the cylinder block and chain cover.
- The oil filter is attached downward from the crankcase to improve serviceability.
- Along with the adoption of the VVT-i system, the cylinder head is provided with a VVT-i controller and a camshaft timing oil control valve. This system is operated by the engine oil.
- A water-cooled oil cooler has been installed between the cylinder block and the oil filter.

— Change (from Previous Model) —

To improve serviceability, a service hole for changing the engine oil and replacing the oil filter are provided in the engine under cover. (See page EG-56).

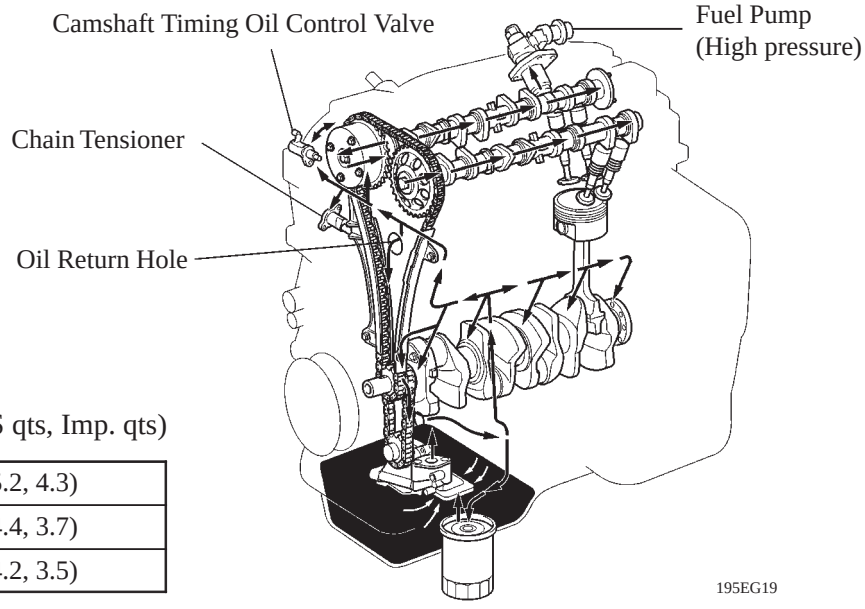

▶ Oil Capacity ◀

liters (US qts, Imp. qts)

Dry	4.9 (5.2, 4.3)
with Oil Filter	4.2 (4.4, 3.7)
without Oil Filter	4.0 (4.2, 3.5)

▶ Lubrication Circuit ◀

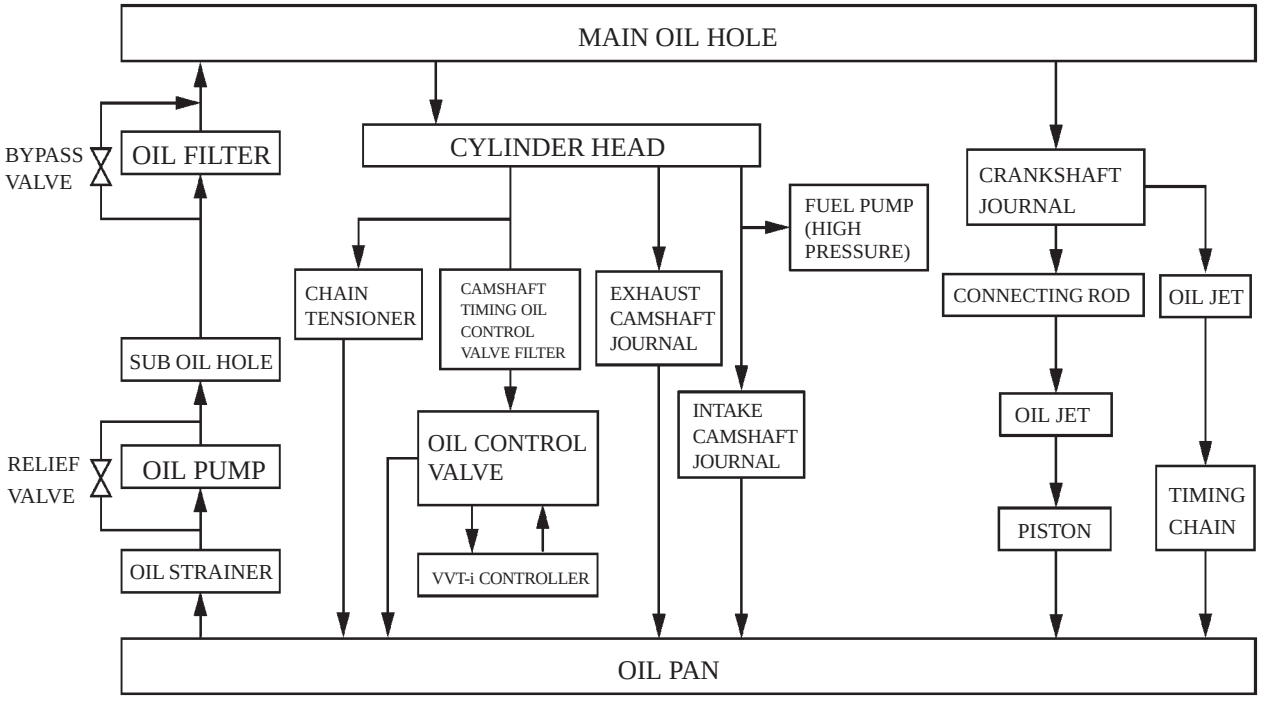

240EG134

2. Oil Pump

- The trochoidal type oil pump is chain-driven by the crankshaft, and fits compactly inside the oil pan.
- Friction is reduced by means of 2 relief holes in the internal relief system.

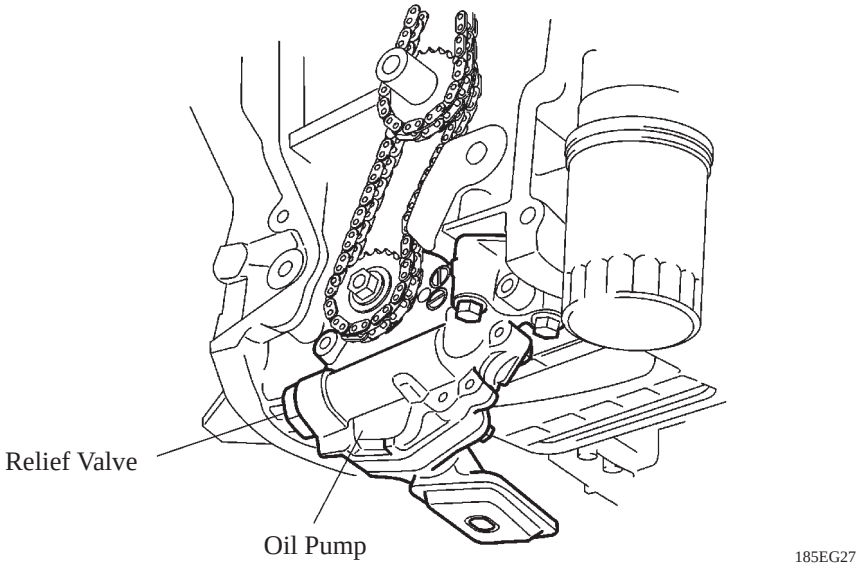

185EG27

■COOLING SYSTEM

- The cooling system is a pressurized, forced-circulation type.
- A thermostat with a bypass valve is located on the water inlet housing to maintain suitable temperature distribution in the cooling system.
- An aluminum radiator core is used for weight reduction.
- The flow of the engine coolant makes a U-turn in the cylinder block to ensure a smooth flow of the engine coolant. In addition, a bypass passage is enclosed in the cylinder head and the cylinder block.
- Warm water from the engine is sent to the throttle body to prevent freeze-up.
- A swirl chamber for the water pump has been provided in the cylinder block to make the water pump more compact.

— Change (from Previous Model) —

- An air bleeder cock has been provided on top of the radiator to improve the efficiency of changing the engine coolant. (See page EG-59)

Water Pump

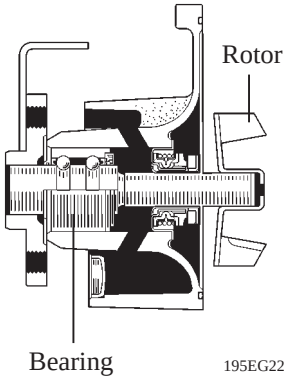

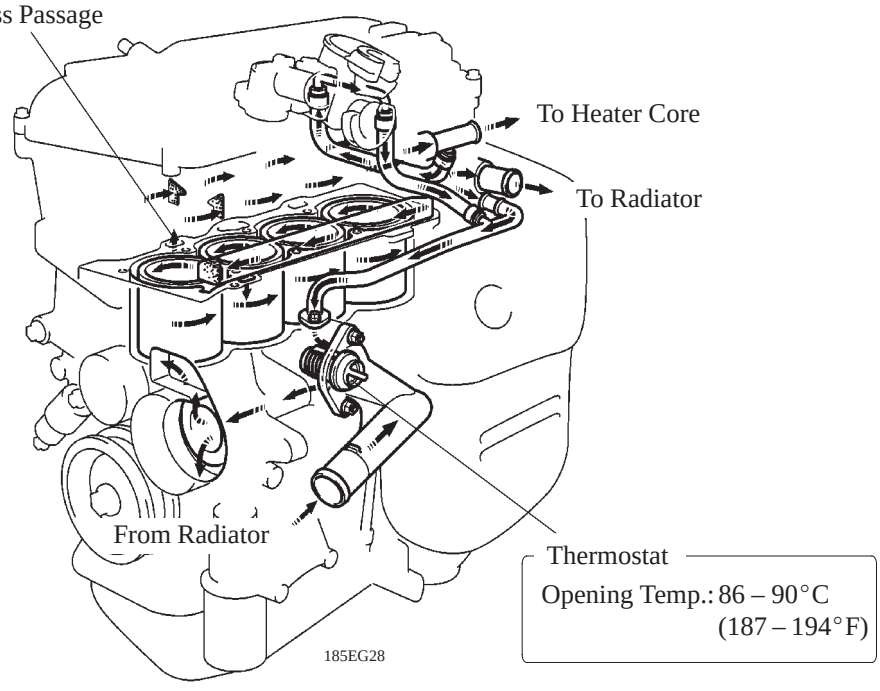

▶ Specification ◀

Capacity liters (US qts, Imp. qts)	LHD	MT	6.0 (6.3, 5.3)
		AT	6.3 (6.7, 5.5)
	RHD	MT	6.1 (6.4, 5.4)
		AT	6.4 (6.8, 5.6)
Type	TOYOTA Genuine Super Long Life Coolant or equivalent		

▶ Water Circuit ◀

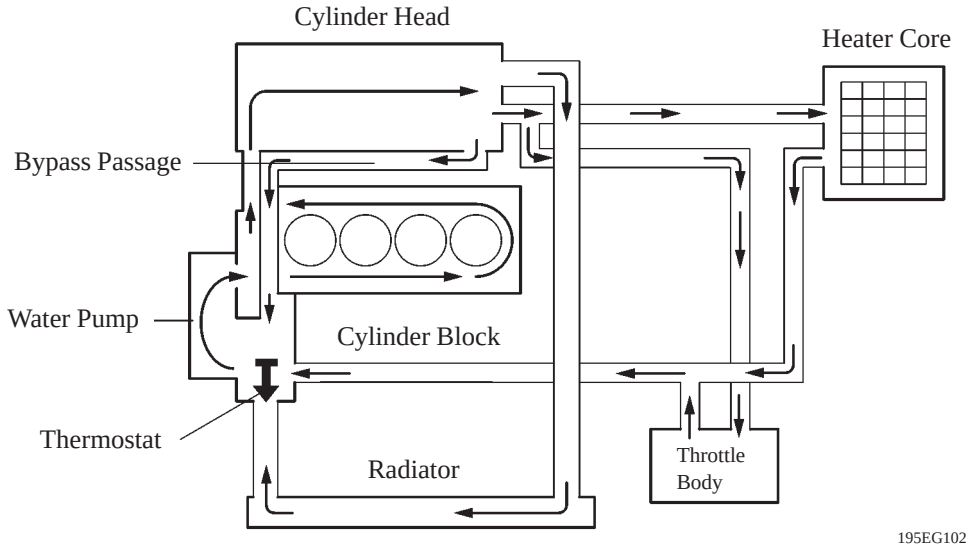

■INTAKE AND EXHAUST SYSTEM

1. General

- A plastic intake manifold is used for weight reduction.
- A stainless steel exhaust manifold is used for weight reduction.
- A thin-wall ceramic TWC (Three-Way Catalytic Converter) is used. By decreasing the thermal capacity in this manner, it becomes easier to heat the catalyst and the catalyst's exhaust cleansing performance is improved.

— Change (from Previous Model) —

- The two resonators has been provided in the intake pipe to reduce air intake noise.
- The material of the air cleaner case clamps has been changed from the metal to plastic. As a result, recyclability has been improved (See page EG-19).

Exhaust Manifold

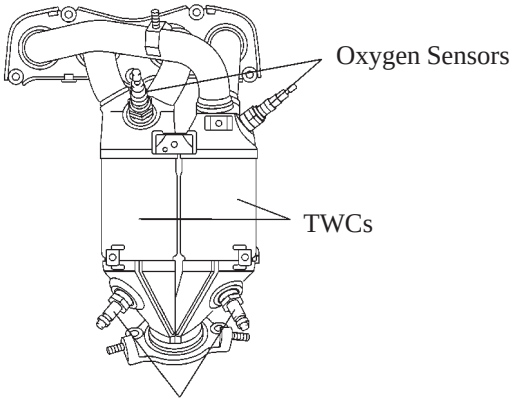

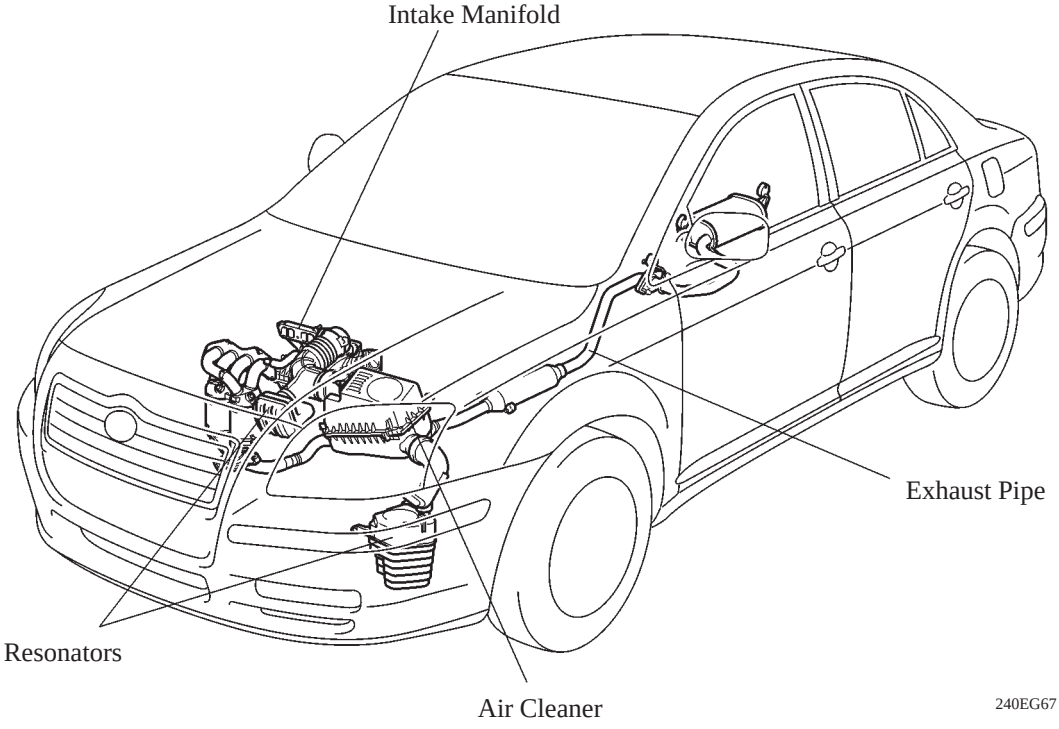

2. Intake Manifold

- The intake manifold has been made of plastic to reduce the weight and the amount of heat transferred from the cylinder head. As a result, it has become possible to reduce the intake air temperature and improve the intake volumetric efficiency.
- Eight, independent long ports have been adopted to improve the torque in the low-to mid-range engine speeds.
- A vacuum tank for intake air control has been built in to achieve a compact package with fewer parts. Refer to page EG-127 for details on intake air control.

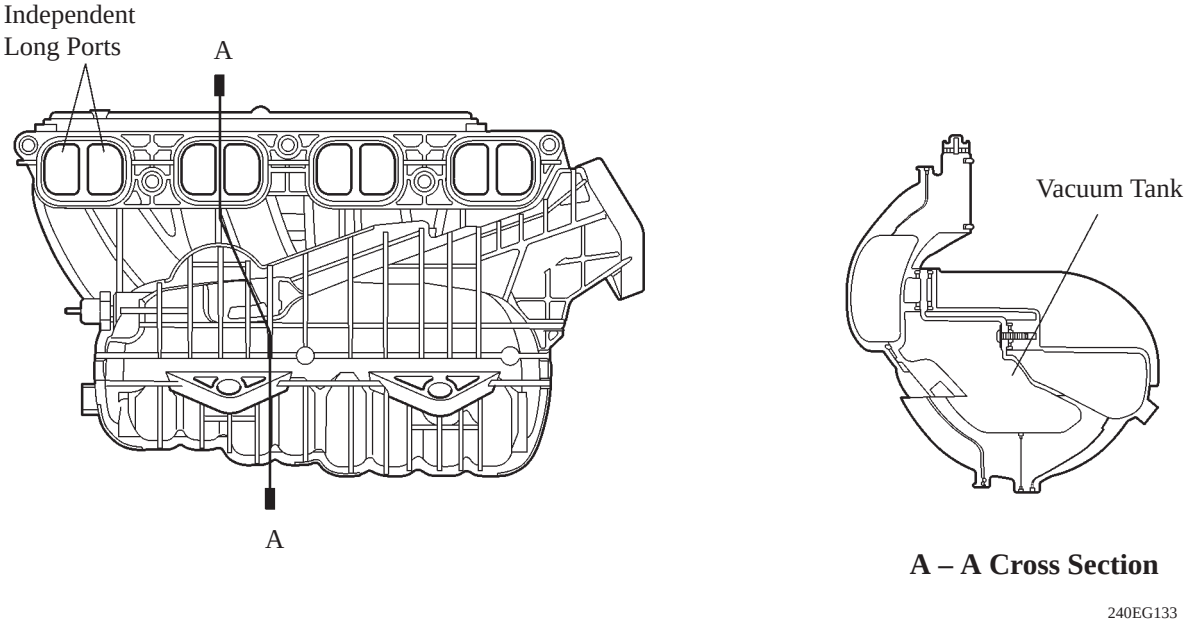

■FUEL SYSTEM

1. General

- A direct injection system used in the fuel system of the 1AZ-FSE engine. This system consists of a fuel pump (for high pressure), delivery pipe, and slit nozzle type injectors.
- A fuel cut control is used to stop the fuel pump when the SRS airbag is deployed in a front or side collision, see page EG-41.
- A quick connector is used to connect the fuel pipe with the fuel hose to improve serviceability.

— Change (from Previous Model) —

- To improve rust resistance, the material of the fuel tank has been changed from metal to plastic. This eliminates plating, as well as the use of lead, in consideration of the environment. (See page EG-20)
- The fuel pump designed for plastic fuel tank has been adopted. It is compact type with integrated fuel filter, pressure regulator, fuel sender gauge and fuel cutoff valve. (See page EG-21)

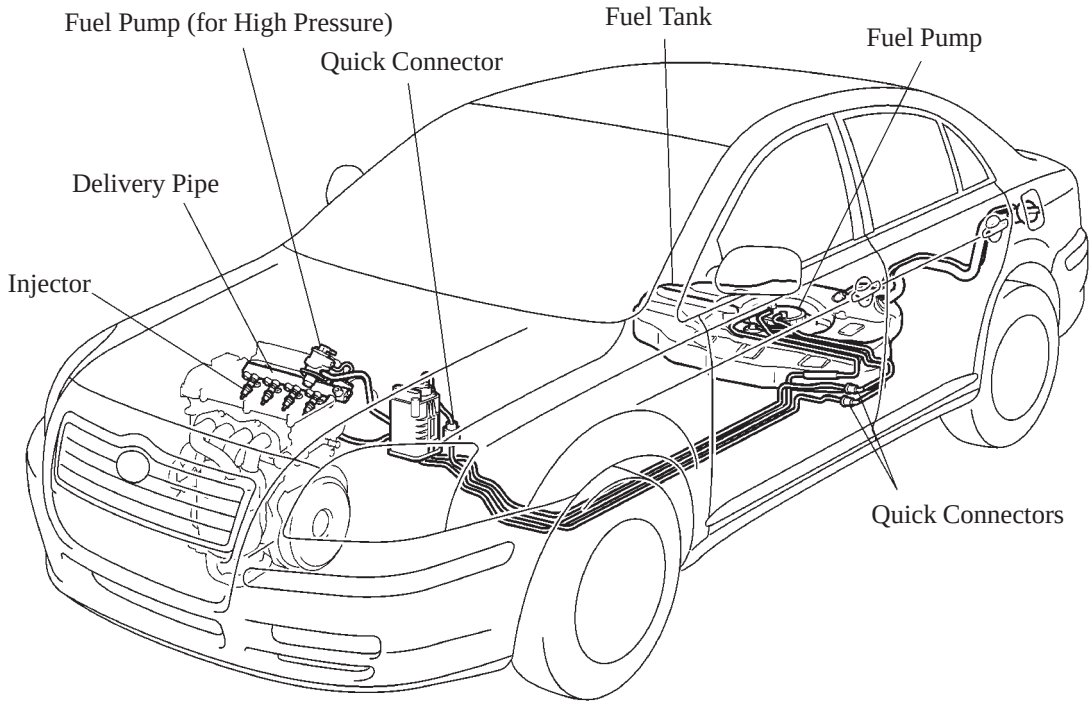

240EG93

2. Direct Injection System

General

Mainly consisting of a fuel pump (high pressure), delivery pipe, and slit nozzle type injectors, this system effects optimal control for combustion by controlling the fuel pressure, injection volume, and the injection timing via the engine ECU and EDU (Electronic Driver Unit).

▶ System Diagram ◀

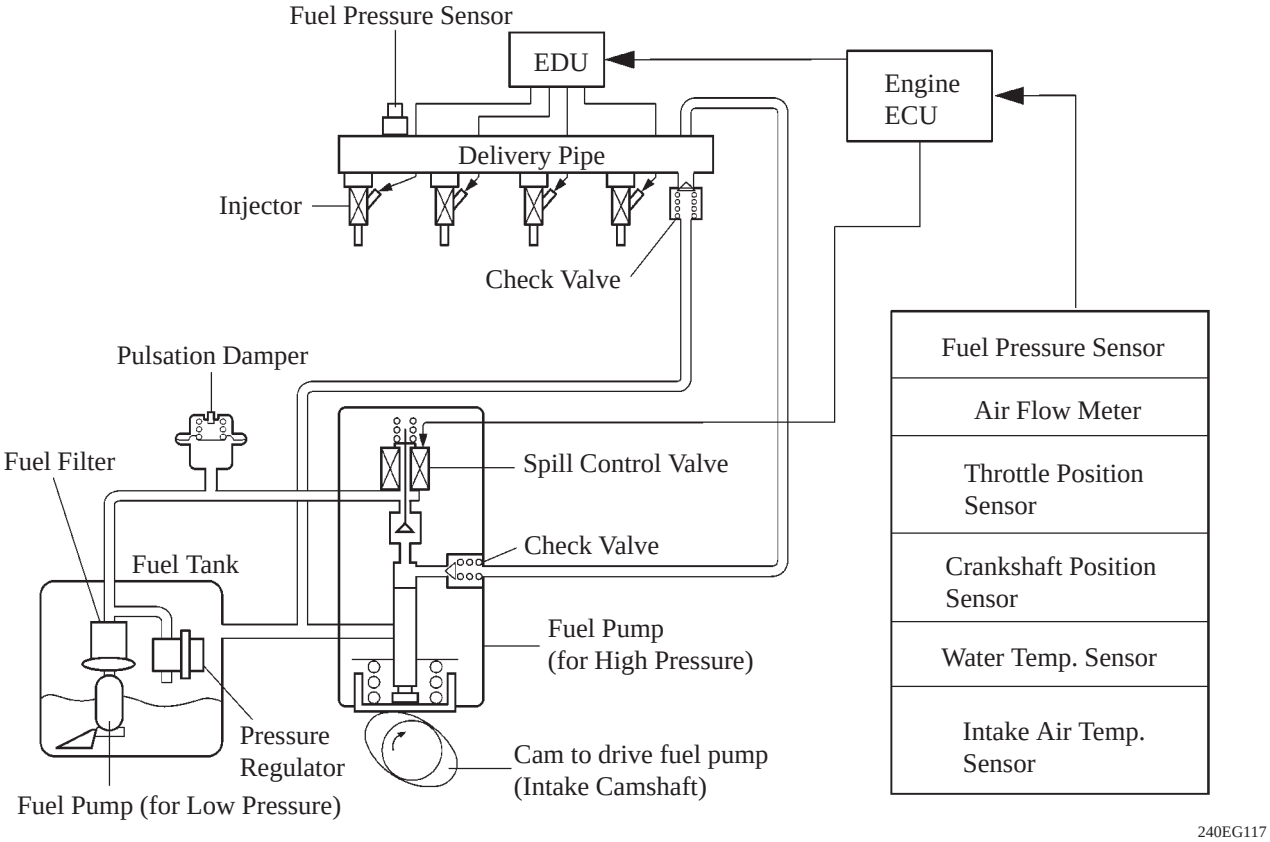

240EG117

Component of Function

The direct injection system for the 1AZ-FSE has following components and functions.

Component	Outline
Fuel Pump (for High Pressure)	To pressurize the fuel from the fuel pump (for low pressure) from 8 to 13 MPa and send it to the delivery pipe.
Delivery Pipe	To deliver the high pressure fuel to the injector.
Fuel Pressure Sensor	The fuel pressure sensor senses the fuel pressure and outputs the signal to the engine ECU.
Relief Valve	When the pressure in the delivery pipe is abnormally high, the relief valve leaks the fuel to the fuel tank to reduce pressure.
Injector	To adjust the quantity of the high pressure fuel and inject the fuel directly into the combustion chamber.
EDU (Electronic Driver Unit)	The EDU drives the injector at high speed.
Engine ECU	Depending on the vehicle condition, and based on the signal from each sensor, calculate the optimized injection timing and injection volume, and control the injector and fuel pump (for high pressure).

Construction and Operation

1) Fuel Pump (for High Pressure)

a. Construction

Fuel pump consists of a plunger, spill control valve and check valve. The plunger moves up and down by a pump driving cam (2 waves) of the intake camshaft. The spill control valve is established in the inlet pass of the pump, and electrically opens and closes the valve by a signal from the engine ECU and controls the pump discharging pressure. A check valve is equipped in the outlet of the pump, and it opens the valve when the fuel pressure in the pump has becomes 60 kPa and discharges the fuel to the delivery pipe.

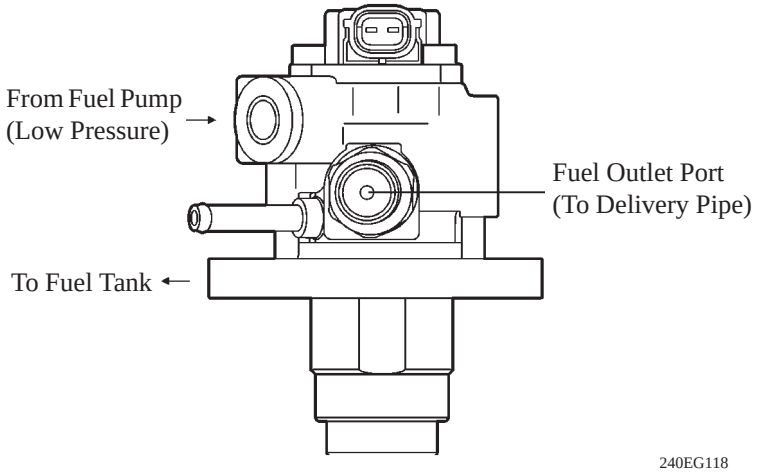

b. Operation

In the suctioning process of the pump, the spill control valve opens and the plunger strokes downward by a spring force, and the fuel is suctioned into the cylinder. Then, by the action of the cam, the plunger strokes upward, but at this time the spill control valve has not closed yet, so the part of the fuel in the cylinder is pushed back to the fuel tank side (while it is not pressurized). On the way in which the plunger is stroking upward (in the compressed process), the engine ECU closes the spill control valve and rise the fuel pressure in the cylinder. When the fuel pressure in the cylinder has exceeded 60 kPa, the check valve starts to open and discharged the fuel to the delivery pipe. The engine ECU controls the fuel discharging pressure from 8 to 13 MPa depending on the driving condition by controlling the timing to close the spill control valve valiantly.

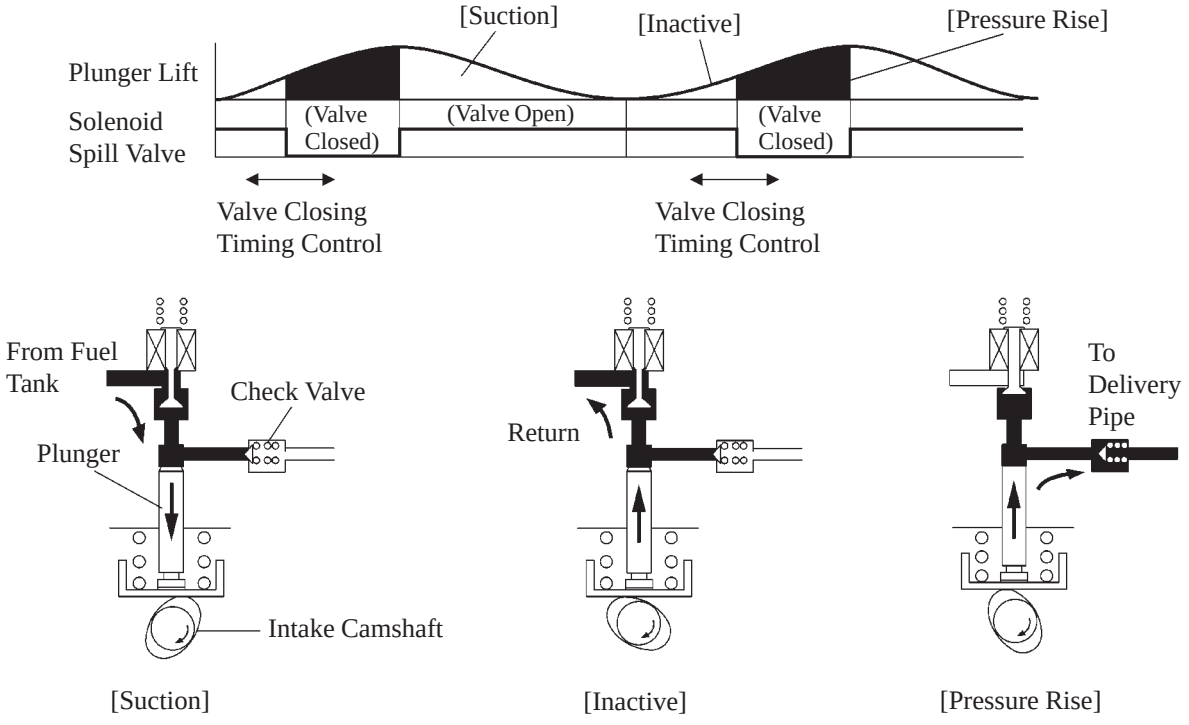

195EG27

2) Delivery Pipe

A delivery pipe made of aluminum die-casting is used adopted. On the delivery pipe, injectors, fuel pressure sensor and relief valve are directly installed. By storing fuel at a high-pressure (8 to 13 MPa), the peak torque during the pumping of fuel under high load conditions has been restrained, thus reducing the vibration and noise of the fuel injection system.

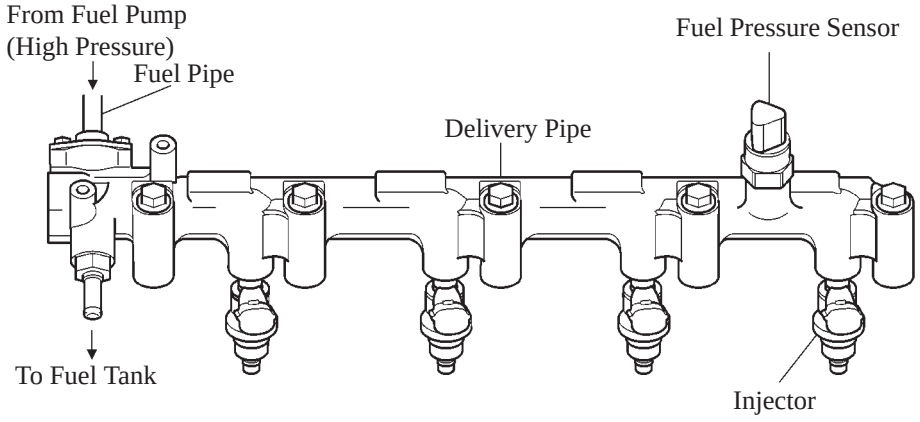

240EG119

3) Fuel Pressure Sensor

The fuel pressure sensor, which is mounted on the delivery pipe, outputs a signal that represents the fuel pressure in the delivery pipe to the engine ECU in order to constantly regulate the fuel at an optimal pressure.

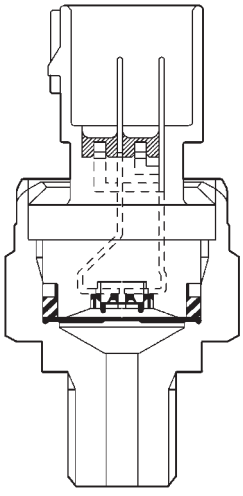

195EG77

4) Injector

High-pressure, slit-nozzle type injectors are used in conjunction with the adoption of the TOYOTA D-4 (Direct injection, 4-stroke gasoline engine). The injectors are secured to the cylinder head by way of a clamp, and the gaskets are used to seal the combustion gas in the cylinder. In addition, an O-ring and the back-up rings are used to seal the fuel and to reduce noise. And the nozzle hole has been coated to restrain the adhesion of deposits. The injectors, based on a signal from the engine ECU, adjusts the flow of the high pressure fuel and injects the fine-grain sector formed fuel directly to the combustion chamber by a slit nozzle. The injectors are actuated under high-voltage and constant-current control by the EDU in order to inject high-pressure fuel in a short time.

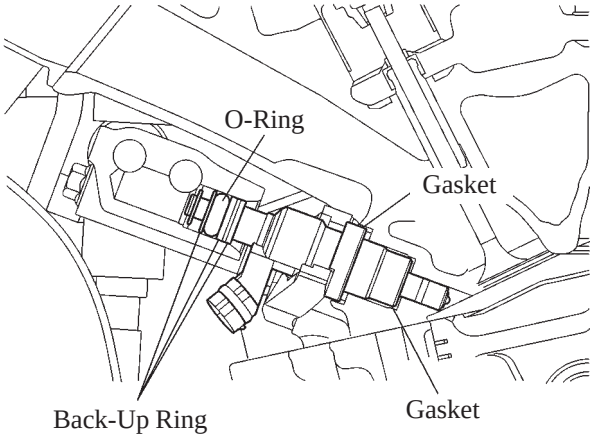

195EG29

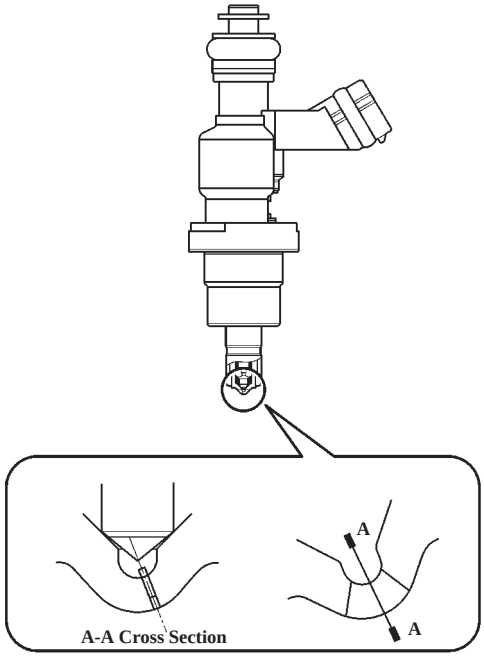

195EG30

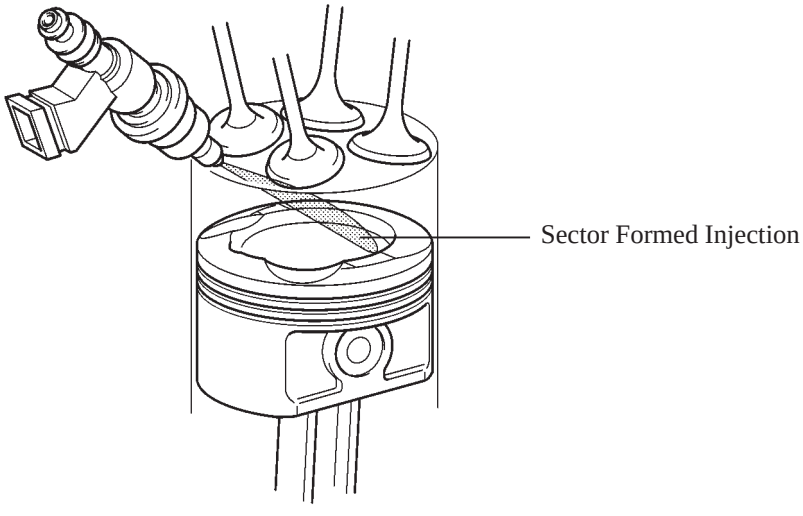

195EG31

5) EDU (Electronic Driver Unit)

- The EDU is used to drive the injector at high speeds. The EDU has realized high-speed driving under high fuel pressure conditions through the use of a DC/DC converter that provides a high-voltage, quick-charging system.
- The engine ECU constantly monitors the EDU and stops the engine in case an abnormal condition is detected.

■IGNITION SYSTEM

1. General

- A DIS (Direct Ignition System) has been adopted. The DIS improves the ignition timing accuracy, reduces high-voltage loss, and enhances the overall reliability of the ignition system by eliminating the distributor. The DIS in the 1AZ-FSE engine is an independent ignition system which has one ignition coil (with igniter) for each cylinder.
- The DIS provides 4 ignition coils, one for each cylinder. The spark plug caps, which provide contact to the spark plugs, are integrated with an ignition coil. Also, an igniter is enclosed to simplify the system.
- Iridium-tipped spark plugs have been adopted to improve ignition performance while maintaining the same level of durability of the platinum-tipped spark plugs.

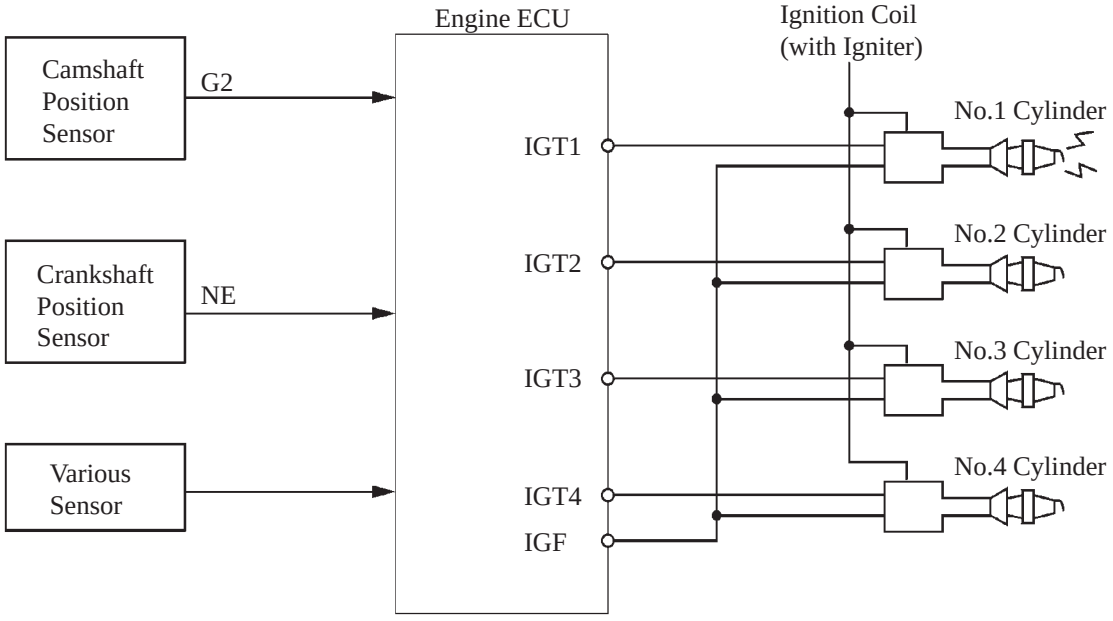

165EG25

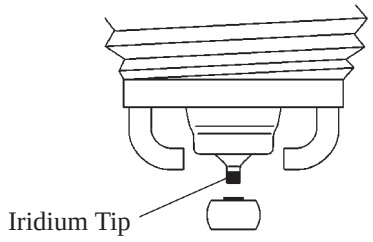

240EG120

▶ Recommended Spark Plugs ◀

DENSO	SK20BR11
Plug Gap	1.0 – 1.1 mm (0.039 – 0.043 in.)

■STARTING SYSTEM

The planetary reduction type starter with the interpolar magnet has been adopted.

- For details of this starter, refer to page EG-23.

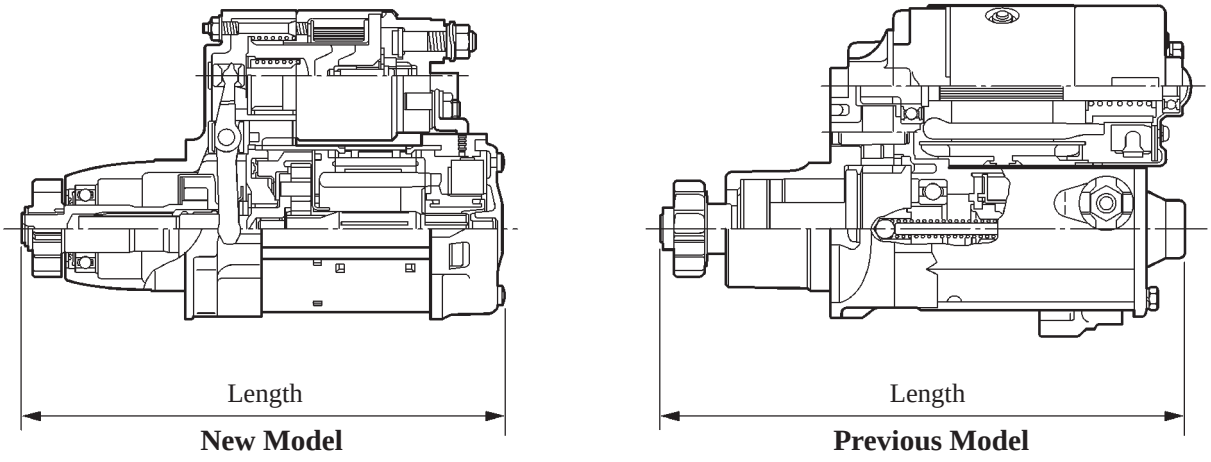

240EG61

▶ Specification ◀

Model	New Model	Previous Model
Length	202 mm (7.95 in.)	216 mm (8.50 in.)
Weight g (lb)	2850 (100.5)	3950 (139.3)
Rating Voltage	12 V	12 V
Rating Output	1.3 kW	1.0 kW
Rotating of Direction	Counterclockwise*	Counterclockwise*

*: Viewed from Pinion Side

■ SERPENTINE BELT DRIVE SYSTEM

- Accessory components are driven by a serpentine belt consisting of a single V-ribbed belt. It reduces the overall engine length, weight and number of engine parts.
- An automatic tensioner eliminates the need for tension adjustment.

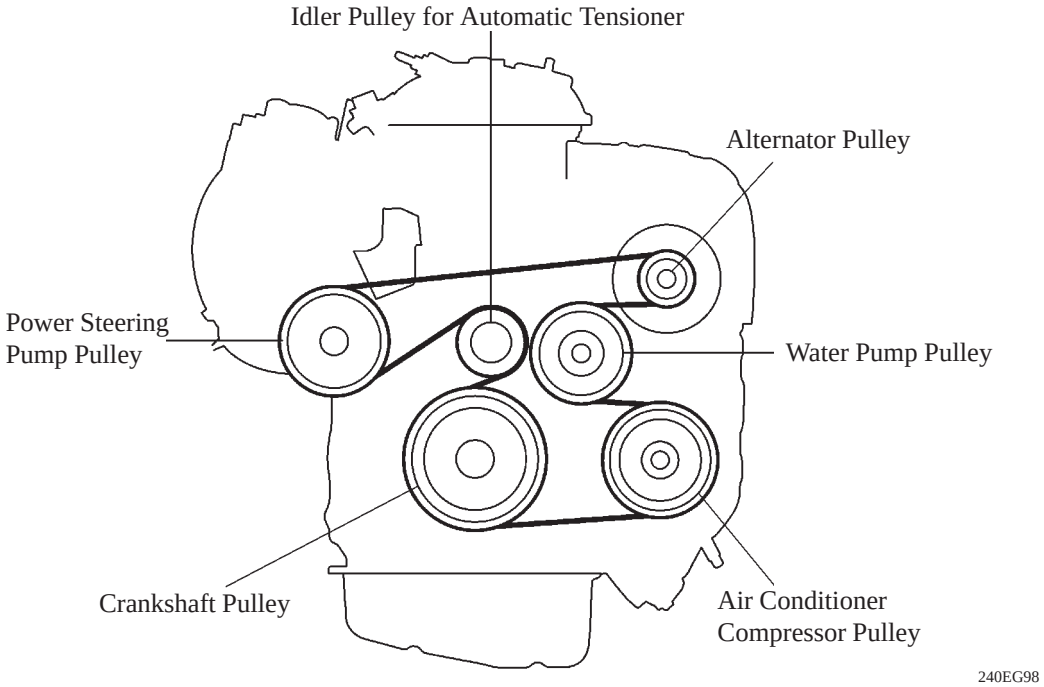

■ENGINE CONTROL SYSTEM

1. General

The engine control system for the 1AZ-FSE engine has following features.

System		Outline	New	Previous
D-4 EFI (Electronic Fuel Injection) [See page EG-118]		● An D-type EFI system is used, which indirectly detects the intake air volume by the manifold pressure sensor signal. ● In contrast to the conventional EFI, D-4 EFI conducts the injection volume control and injection timing control simultaneously. ● The fuel injection system is a sequential multiport fuel injection system.	—	○
		● An L-type EFI system detects the intake air volume with a hot-wire type air flow meter ● In contrast to the conventional EFI, D-4 EFI conducts the injection volume control and injection timing control simultaneously. ● The fuel injection system is a sequential multiport fuel injection system.	○	—
ESA (Electronic Spark Advance)		Ignition timing determined by the engine ECU based on signals from various sensors. The engine ECU corrects ignition timing in response to engine knocking.	○	○
VVT-i (Variable Valve Timing-intelligent) [See page EG-119]		Controls the intake camshaft to an optimal valve timing in accordance with the engine condition.	○	○
ETCS-i (Electronic Throttle Control System-intelligent) [See page EG-123]		Optimally controls the throttle valve opening in accordance with the amount of accelerator pedal effort and the condition of the engine and the vehicle. In addition, comprehensively controls the ISC, VSC system, and TRC systems.	○	○
Intake Air Control [See page EG-127]		The engine ECU controls the intake air control valve via the VSV and the diaphragm in accordance with the engine conditioning signals (manifold pressure sensor, crankshaft position sensor, water temp. sensor, throttle position sensor).	—	○
		The engine ECU controls the intake air control valve via the VSV and the diaphragm in accordance with the engine conditioning signals (air flow meter, manifold pressure sensor, crankshaft position sensor, water temp. sensor, throttle position sensor).	○	—
Fuel Pump Control	For High Pressure Side	Regulates the fuel pressure within a range of 8 to 13 MPa in accordance with driving conditions.	○	○
	For Low Pressure Side	● Fuel pump operation is controlled by signal from the engine ECU. ● To stop the fuel pump when the airbag is deployed at the front or side collision.	○	○

EG

System	Outline	New	Previous
Oxygen Sensor Heater Control	Maintains the temperature of the air fuel ratio sensor and oxygen sensor at an appropriate level to increase accuracy of detection of the oxygen concentration in the exhaust gas.	○	○
Evaporative Emission Control	The engine ECU controls the purge flow of evaporative emissions (HC) in the charcoal canister in accordance with engine conditions.	○	○
Air Conditioner Cut-off Control	By turning the air conditioner compressor ON or OFF in accordance with the engine condition, drivability is maintained.	○	○
TWC Warm-Up Control [See page EG-128]	Significantly retards the ignition timing in order to quickly warm-up the TWC.	○	—
Engine Immobiliser	Prohibits fuel delivery and ignition if an attempt is made to start the engine with an invalid ignition key.	○	○
Diagnosis [See page EG-129]	When the engine ECU detects a malfunction, the engine ECU diagnoses and memorizes the failed section.	○	○
Fail-Safe [See page EG-129]	When the engine ECU detects a malfunction, the engine ECU stops or controls the engine according to the data already stored in memory.	○	○

2. Construction

The configuration of the engine control system is as shown in the following chart.

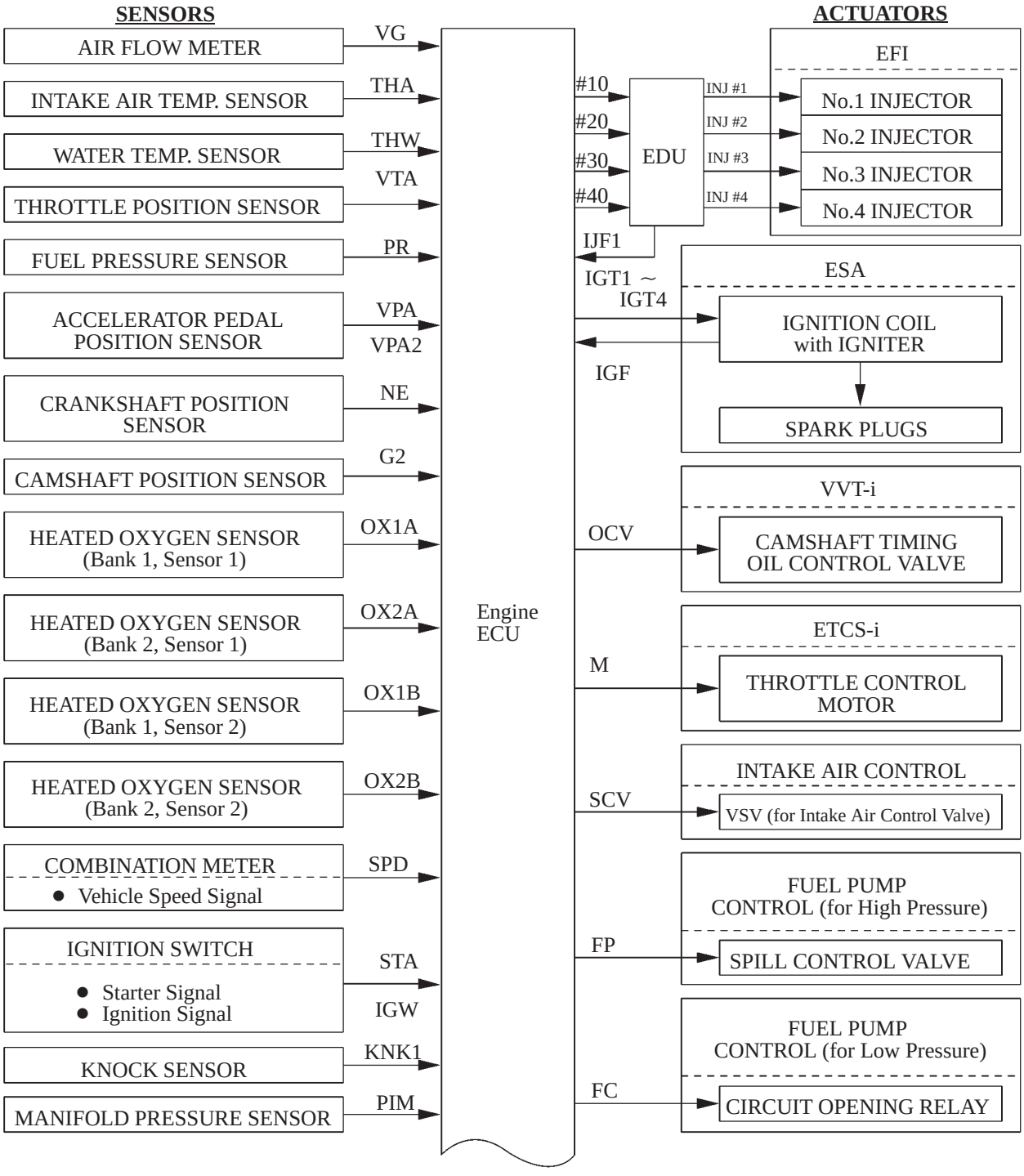

(Continued)

240EG85

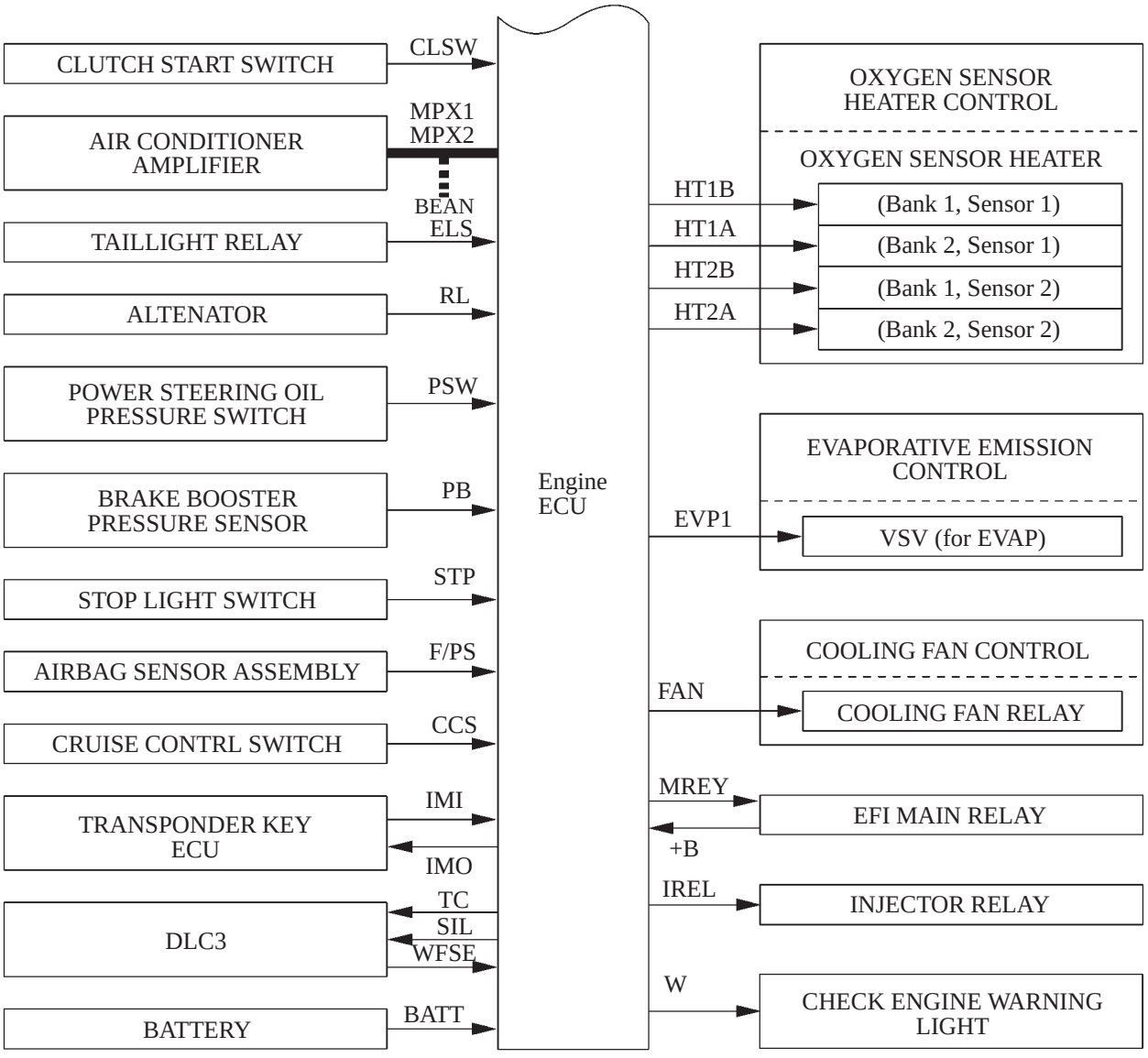
CLUTCH START SWITCH
CLSW
AIR CONDITIONER AMPLIFIER
MPX1
MPX2
TAILLIGHT RELAY
BEAN ELS
ALTENATOR
RL
POWER STEERING OIL PRESSURE SWITCH
PSW
BRAKE BOOSTER PRESSURE SENSOR
PB
STOP LIGHT SWITCH
STP
AIRBAG SENSOR ASSEMBLY
F/PS
CRUISE CONTRL SWITCH
CCS
TRANSPONDER KEY ECU
IMI
IMO
DLC3
TC
SIL
WFSE
BATTERY
BATT
Engine ECU
OXYGEN SENSOR HEATER CONTROL
OXYGEN SENSOR HEATER
HT1B
HT1A
HT2B
HT2A
(Bank 1, Sensor 1)
(Bank 2, Sensor 1)
(Bank 1, Sensor 2)
(Bank 2, Sensor 2)
EVAPORATIVE EMISSION CONTROL
EVP1
VSV (for EVAP)
COOLING FAN CONTROL
FAN
COOLING FAN RELAY
MREY
+B
EFI MAIN RELAY
IREL
INJECTOR RELAY
W
CHECK ENGINE WARNING LIGHT

240EG86

3. Engine Control System Diagram

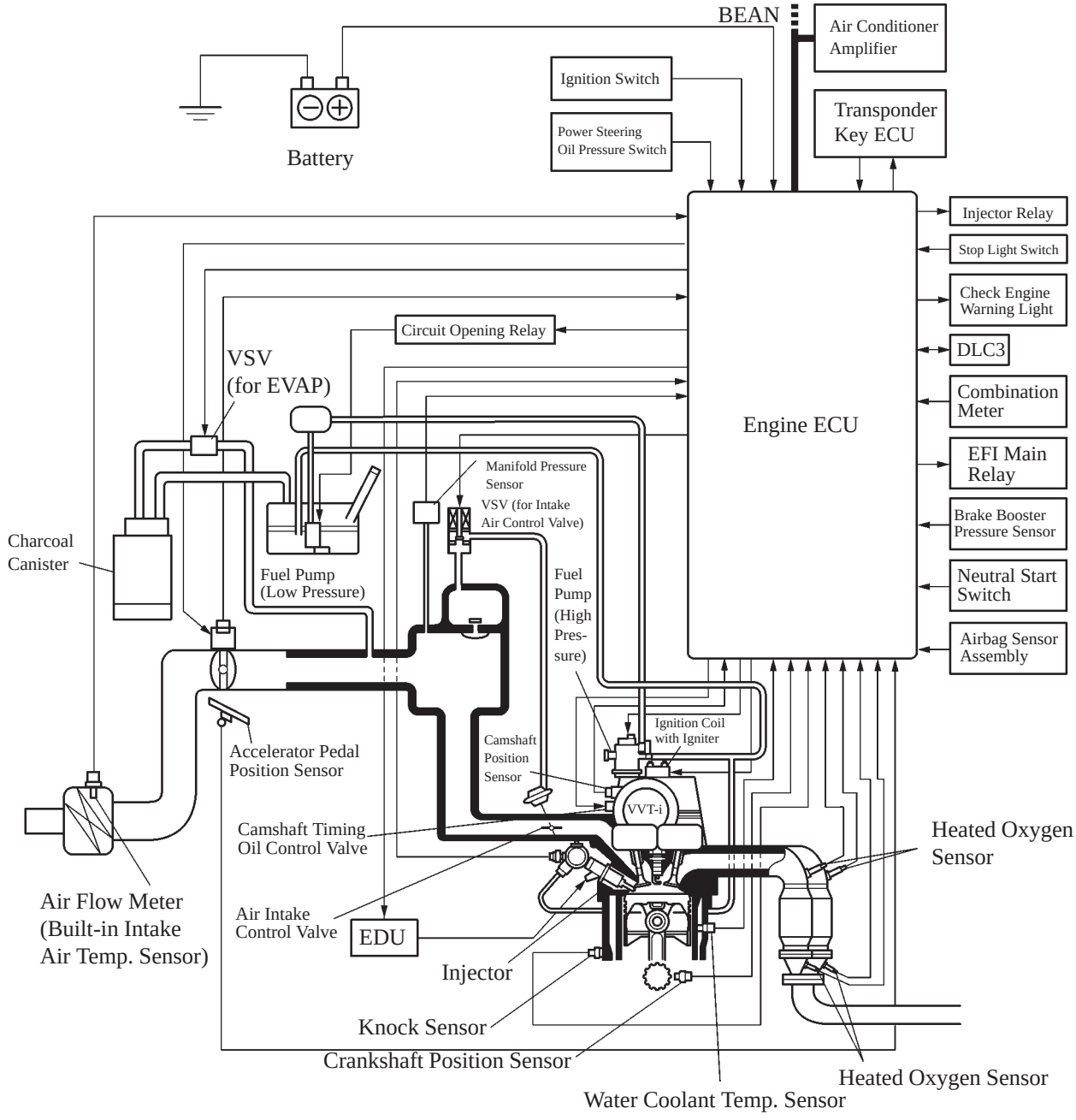

240EG87

EG

4. Layout of Main Components

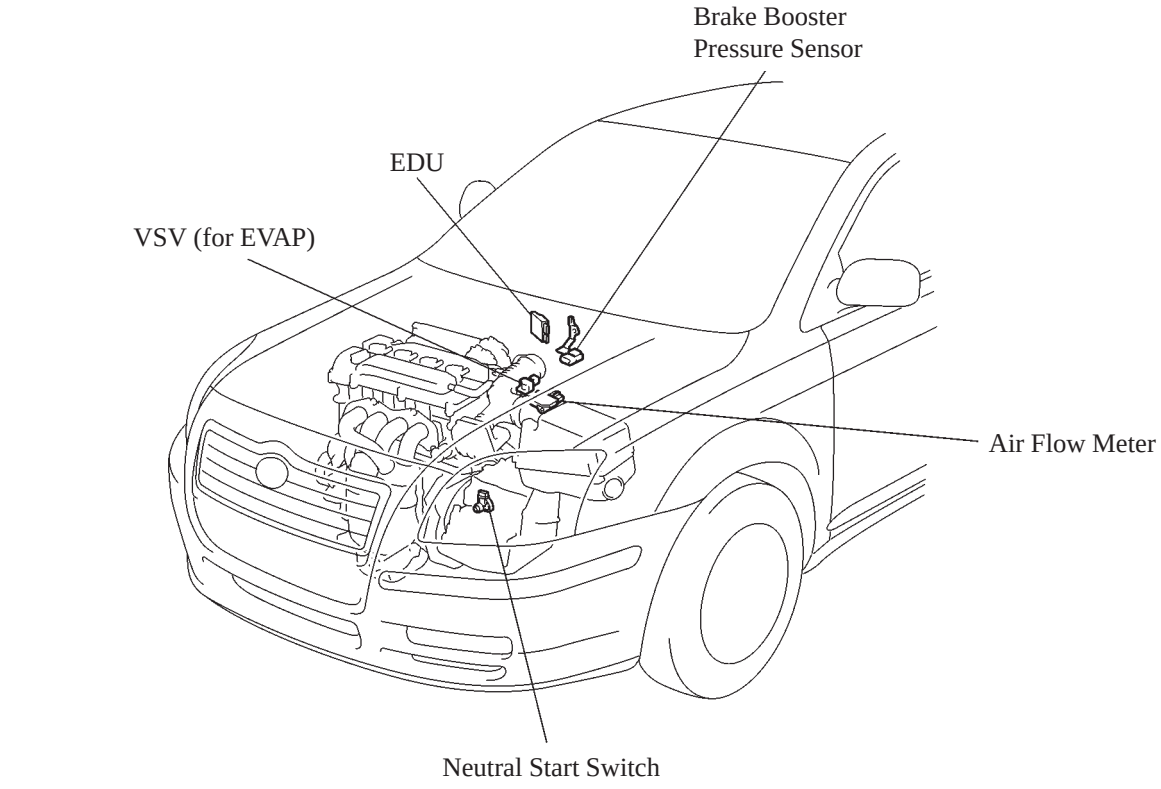

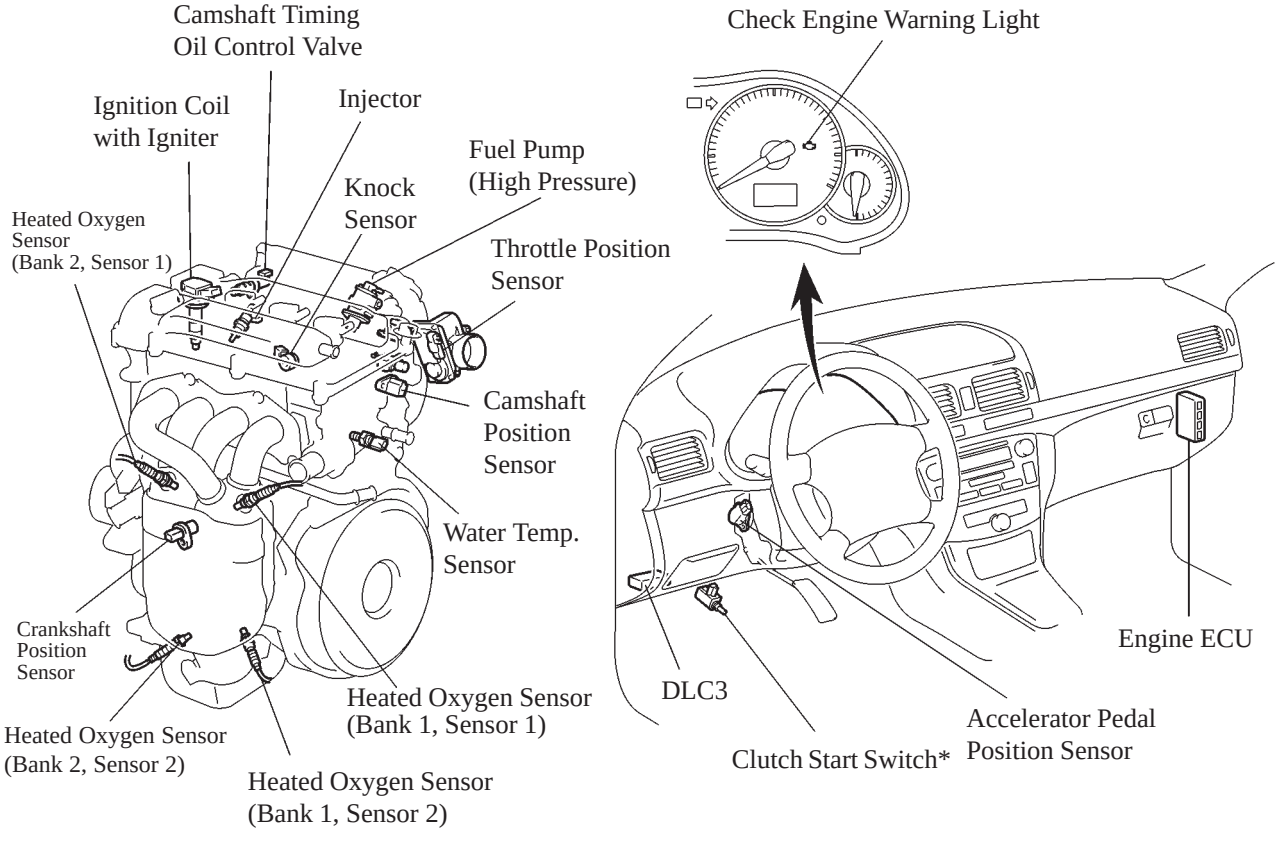

*: Only for Manual Transaxle Model

5. Main components of Engine Control System

General

The main components of the 1AZ-FSE engine control system are as follows:

: New

Components	Outline	Quantity
Engine ECU (See page EG-73)	32-bit	1
Air Flow Meter	Hot-Wire Type	1
Manifold Pressure Sensor	Semiconductor Type	1
Fuel Pressure Sensor	Semiconductor Strain Gauge Type	1
Crankshaft Position Sensor (Rotor Teeth)	Pick-Up Coil Type (36 – 2)	1
Camshaft Position Sensor (Rotor Teeth)	Pick-Up Coil Type (3)	1
Throttle Position Sensor	No-contact Type	1
Accelerator Pedal Position Sensor	Linear Type	1
Knock Sensor (See page EG-33)	Built-in Piezoelectric Element Type (Flat Type)	1
Oxygen Sensor (Bank 1, Sensor 1) (Bank 2, Sensor 1) (Bank 1, Sensor 2) (Bank 2, Sensor 2)	Type with Heater	4
Injector	High Pressure Slit Nozzle Type	4
Brake Booster Pressure Sensor	Semiconductor Type	1
EDU (Electronic Driver Unit)	Built-in DC/DC Converter	1

Air Flow Meter

- This compact and lightweight air flow meter, which is a plug-in type, allows a portion of the intake air to flow through the detection area. By directly measuring the mass and the flow rate of the intake air, the detection precision is improved and the intake air resistance has been reduced.
- This mass air flow meter has a built-in intake air temperature sensor.

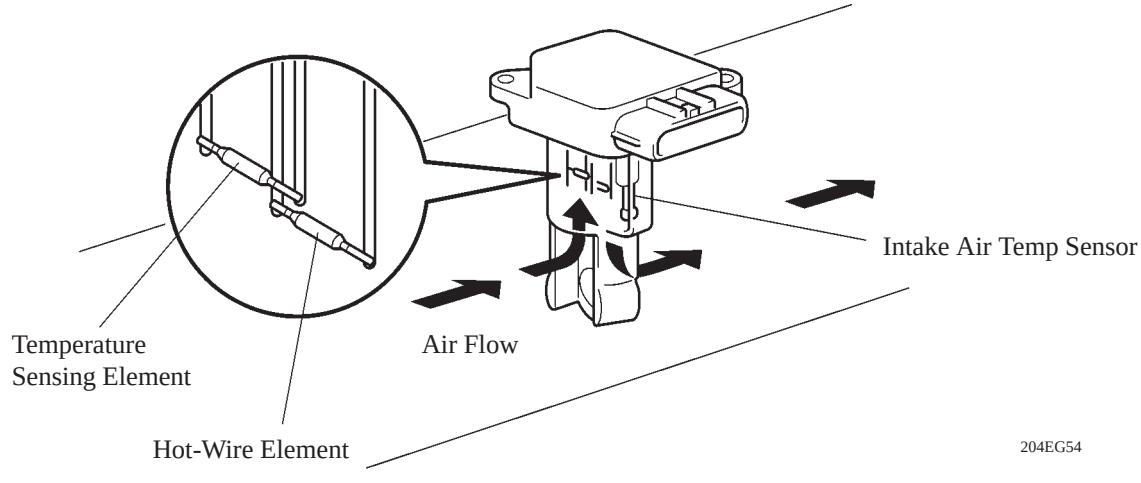

Throttle Position Sensor

- The throttle position sensor uses 2 Hall ICs. This sensor detects the throttle valve opening angle by converting into electrical signals the changes in magnetic flux density created when the 2 magnetic yoke revolves around the 2 Hall ICs.
- This sensor converts the throttle valve opening angles into electronic signals with two differing characteristics and outputs them to the engine ECU. One is the VTA1 (main) signal that linearly outputs the voltage along the ensure range of the throttle valve opening angle. The other is the VTA2 (sub) signal that outputs an offset voltage.

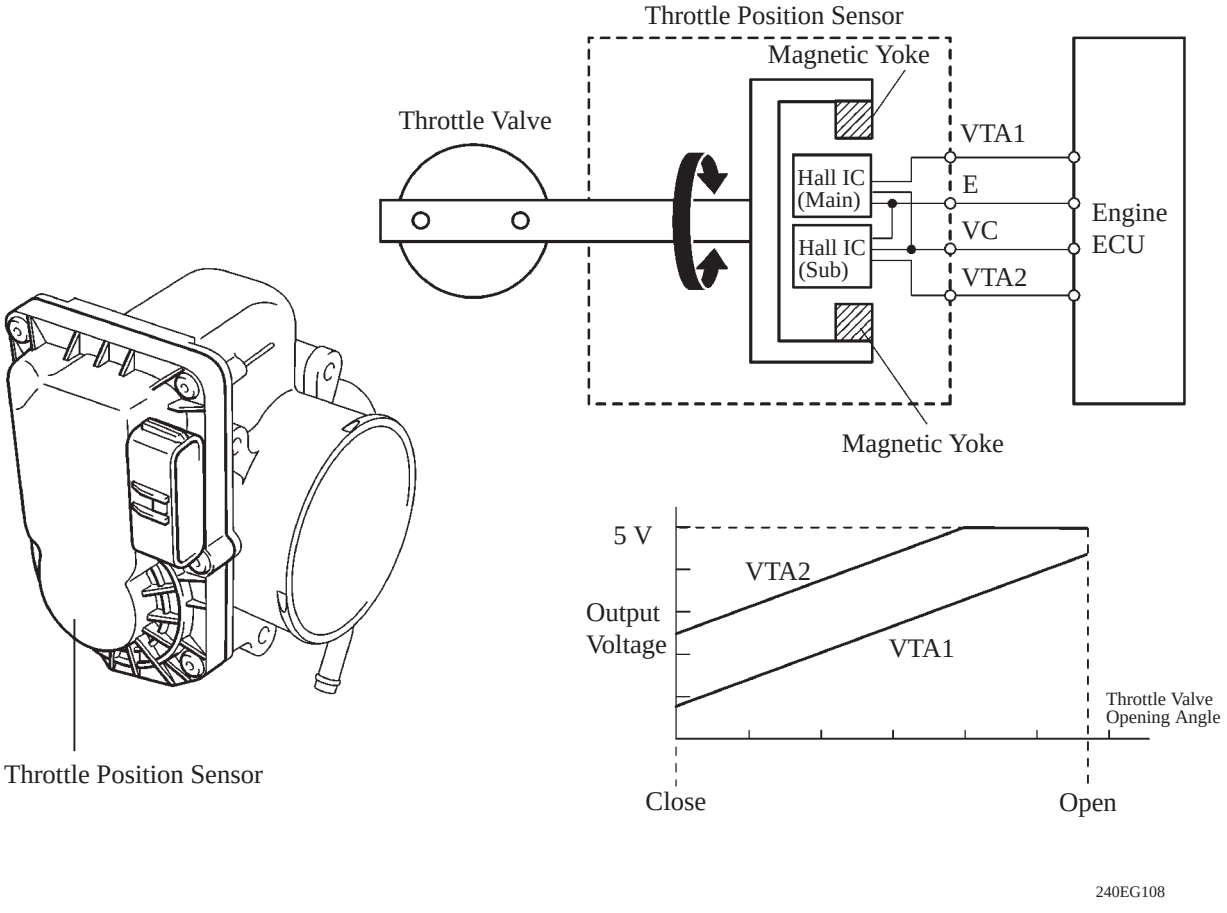

Service Tip

This sensor uses a Hall IC, so the inspection method differs from that of a conventional throttle position sensor.
For details, refer to the Avensis Repair Manual (Pub. No. RM1018E).

Accelerator Pedal Position Sensor

This sensor converts the accelerator pedal depressed angles into electric signals with two differing characteristics and outputs them to the engine ECU. One is the VPA1 signal that linearly outputs the voltage along the entire range of the accelerator pedal depressed angle. The other is the VPA2 signal that outputs on offset voltage.

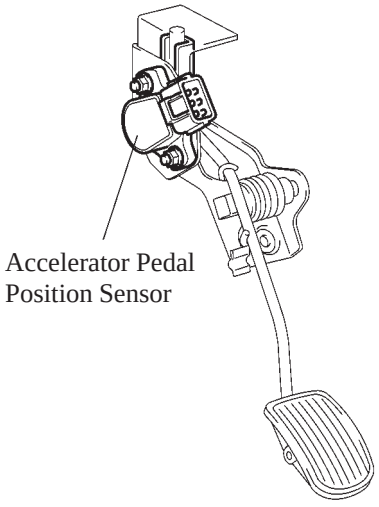

206EG37

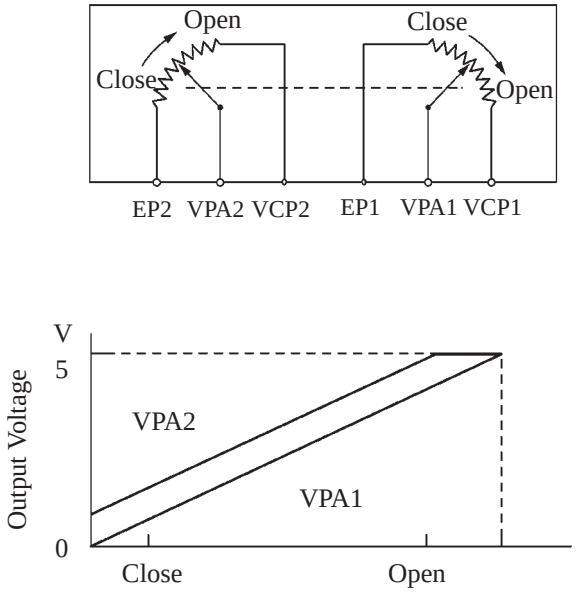

199EG40

Brake Booster Pressure Sensor

The brake booster pressure sensor consists of a semiconductor, which utilizes the characteristic of a silicon chip that changes its electrical resistance when pressure is applied to it. The sensor converts the pressure into an electrical signal, and sends it to the engine ECU in an amplified form.

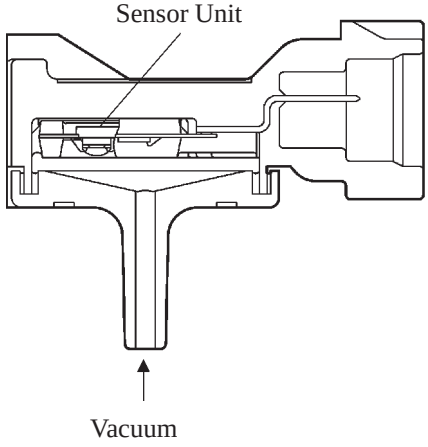

210EG57

6. D-4 EFI (Electronic Fuel Injection) System

- In contrast to the conventional EFI (Electronic Fuel Injection), the D-4 (Direct Injection 4-Stroke Gasoline Engine) EFI conducts the injection volume control and injection timing control simultaneously.
- The injection volume is determined by the engine ECU, based on the signals from the vacuum sensor, to which corrections from various sensors are added. The engine ECU achieves optimal injection volume by controlling the fuel pressure and the opening time of the injector nozzle.
- A sequential multiport fuel injection system is used. The engine ECU calculates the optimal injection timing independently into each cylinder in accordance with the driving conditions.

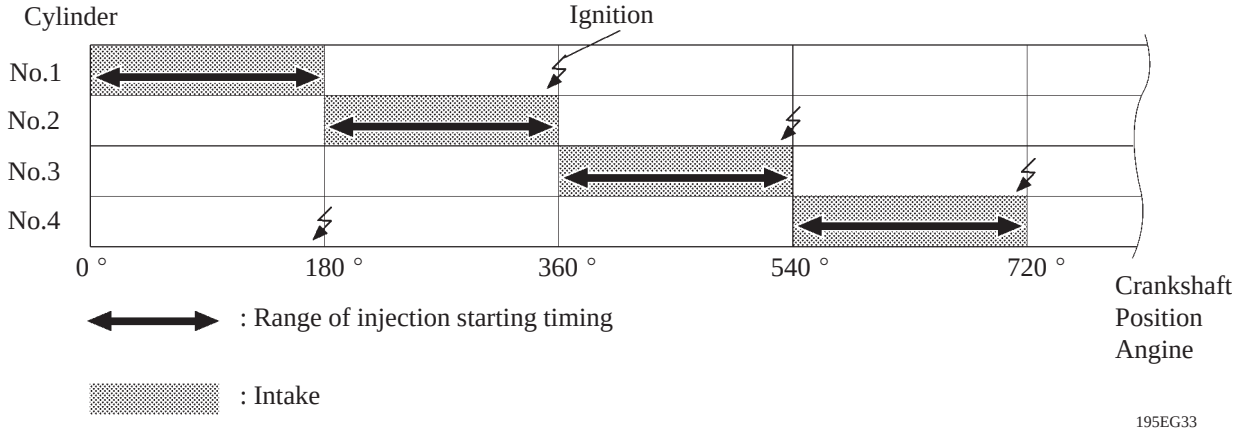

7. VVT-i (Variable Valve Timing-intelligent) System

General

- The VVT-i system is designed to control the intake camshaft within a range of 53■(of Crankshaft Angle) to provide valve timing that is optimally suited to the engine condition. This improves torque in all the speed ranges as well as increasing fuel economy, and reducing exhaust emissions.

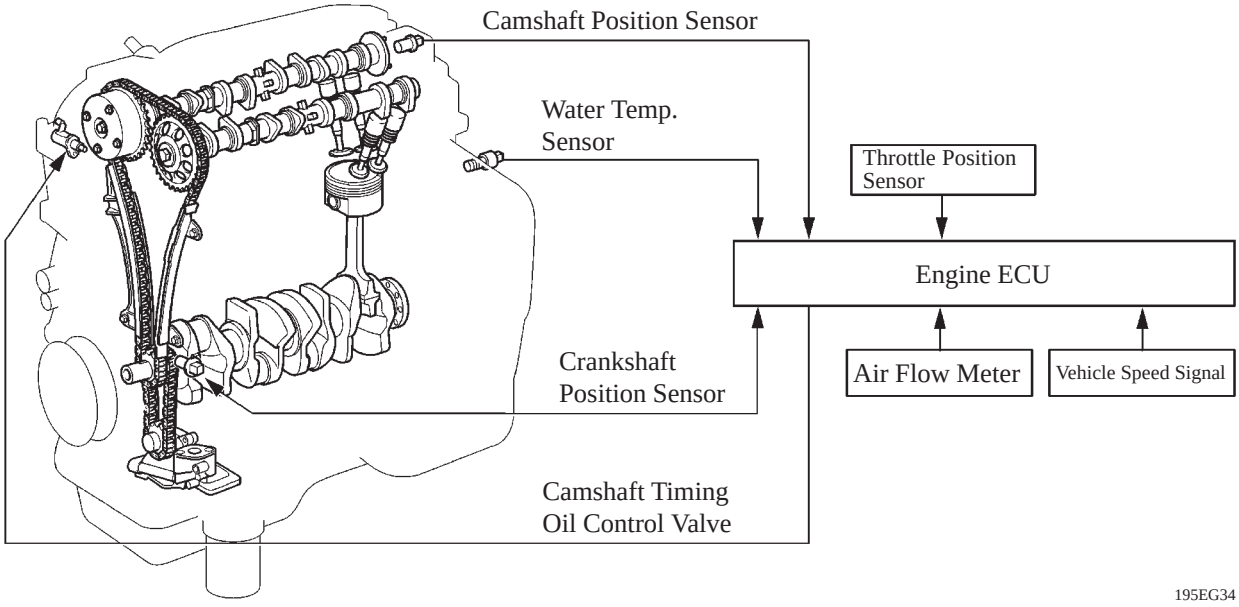

195EG34

- Using the engine speed, intake air volume, throttle position and water temperature, the engine ECU can calculate optimal valve timing for each driving condition and controls the camshaft timing oil control valve. In addition, the engine ECU uses signals from the camshaft position sensor and the crankshaft position sensor to detect the actual valve timing, thus providing feedback control to achieve the target valve timing.

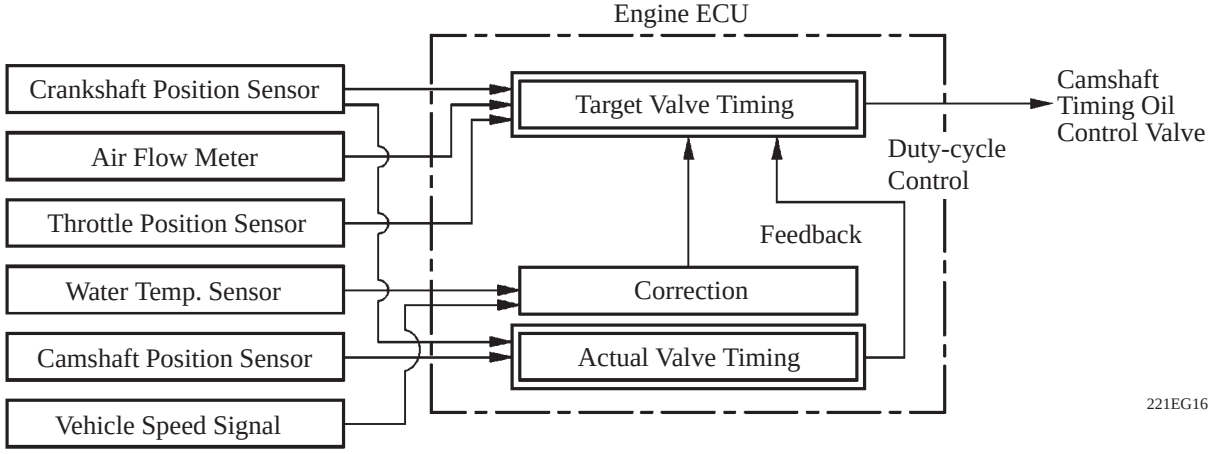

221EG16

Effectiveness of the VVT-i System

Operation State	Objective		Effect
● During Idling ● At Light Load	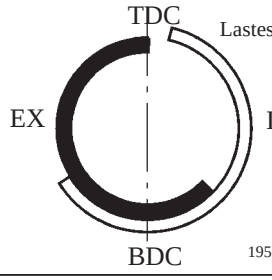	Losing overlap to reduce blow back to the intake side	● Stabilized idling rpm ● Better fuel economy
At Medium Load	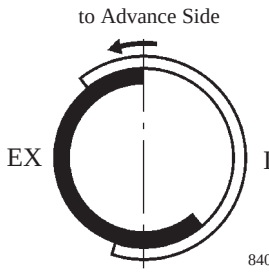	Increasing overlap to increase internal EGR to reduce pumping loss	● Better fuel economy ● Improved emission control
In Low to Medium Speed Range with Heavy Load	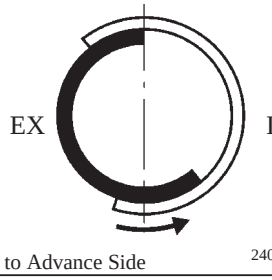	Advancing the intake valve close timing for volumetric efficiency improvement	Improved torque in low to medium speed range
In High Speed Range with Heavy Load	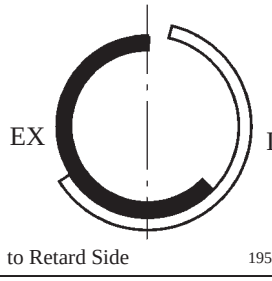	Retarding the intake valve close timing for volumetric efficiency improvement	Improved output
At Low Temp.	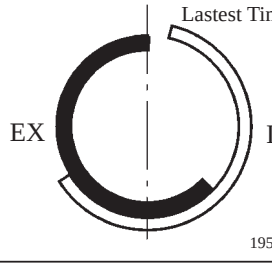	Losing overlap to prevent blow back to the intake side leads to the lean burning condition, and stabilizes the idling speed at fast idle	● Stabilized fast idle rpm ● Better fuel economy
● Upon Starting ● Stopping the Engine	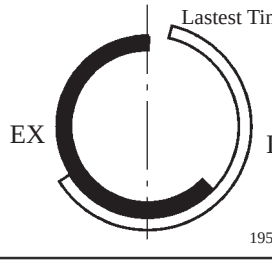	Losing overlap to minimize blow back to the intake side	Improved starability

Construction

1) VVT-i Controller

This controller consists of the housing driven from the timing chain and the vane coupled with the intake camshaft.
The oil pressure sent from the advance or retard side path at the intake camshaft causes rotation in the VVT-i controller vane circumferential direction to vary the intake valve timing continuously.
When the engine is stopped, the intake camshaft will be in the most retarded state to ensure startability.
When hydraulic pressure is not applied to the VVT-i controller immediately after the engine has been started, the lock pin locks the movement of the VVT-i controller to prevent a knocking noise.

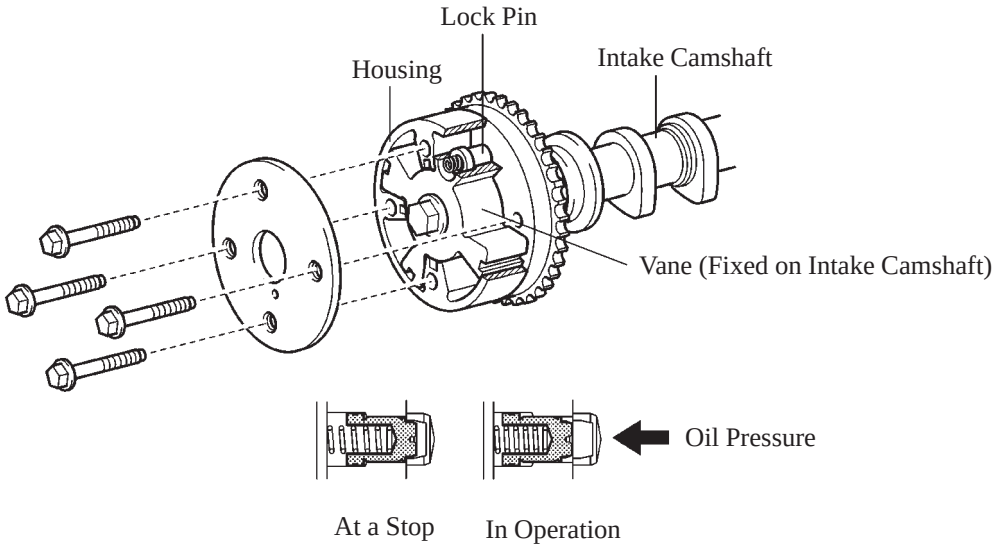

Lock Pin

2) Camshaft Timing Oil Control Valve

The camshaft timing oil control valve controls the spool valve position in accordance with the duty control from the engine ECU thus allocating the hydraulic pressure that is applied to the VVT-i controller to the advance and the retard side. When the engine is stopped, the camshaft timing oil control valve is in the most retarded state.

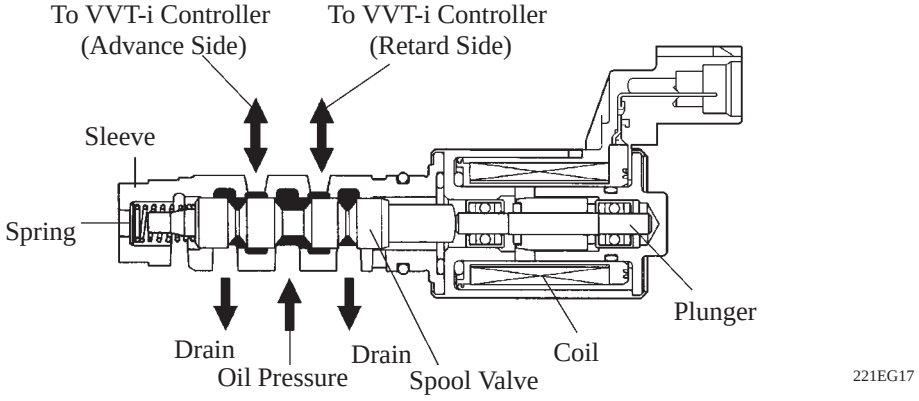

Operation

1) Advance

When the camshaft timing oil control valve is positioned as illustrated below by the advance signals from the engine ECU, the resultant oil pressure is applied to the timing advance side vane chamber to rotate the camshaft in the timing advance direction.

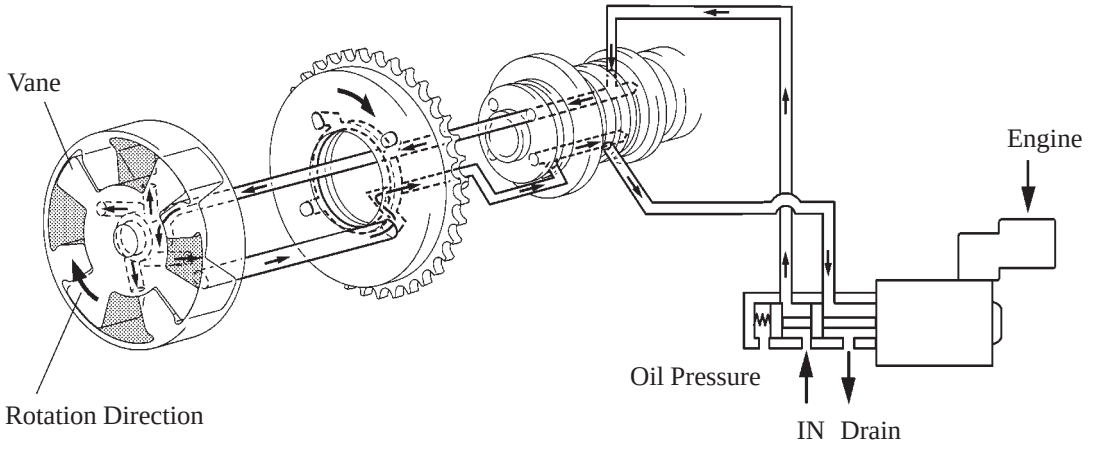

2) Retard

When the camshaft timing oil control valve is positioned as illustrated below by the retard signals from the engine ECU, the resultant oil pressure is applied to the timing retard side vane chamber to rotate the camshaft in the timing retard direction.

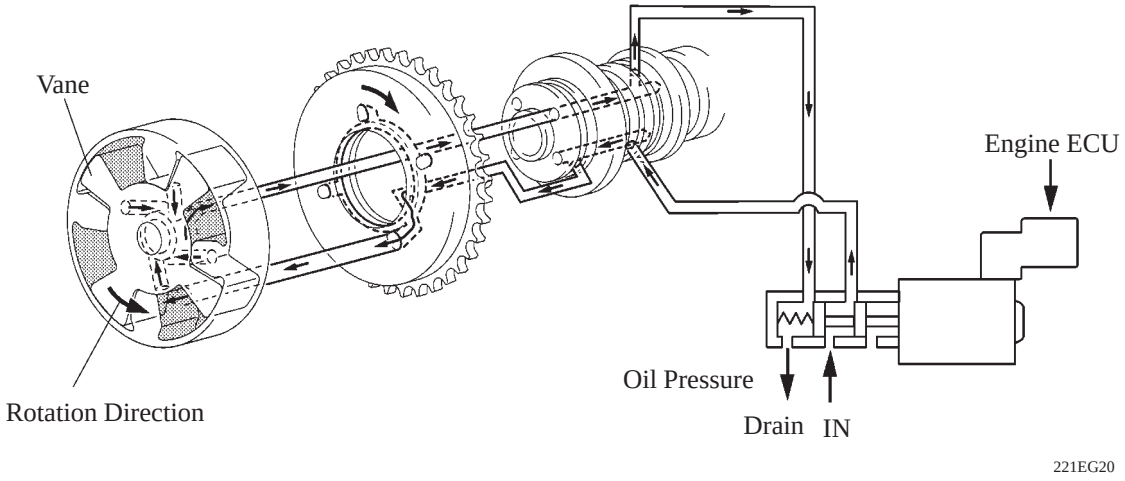

3) Hold

After reaching the target timing, the valve timing is held by keeping the camshaft timing oil control valve in the neutral position unless the traveling state changes.
This adjusts the valve timing at the desired target position and prevents the engine oil from running out when it is unnecessary.

8. ETCS-i (Electronic Throttle Control System-intelligent)

General

- The ETCS-i system, which realizes excellent throttle control in all the operating ranges, is used.
- The ETCS-i uses the engine ECU to calculate the optimal throttle valve opening that is appropriate for the respective driving condition and uses a throttle control motor to control the opening.
- The ETCS-i controls the ISC (Idle Speed Control) system, the TRC (Traction Control) system, the VSC (Vehicle Stability Control) system and the cruise control.

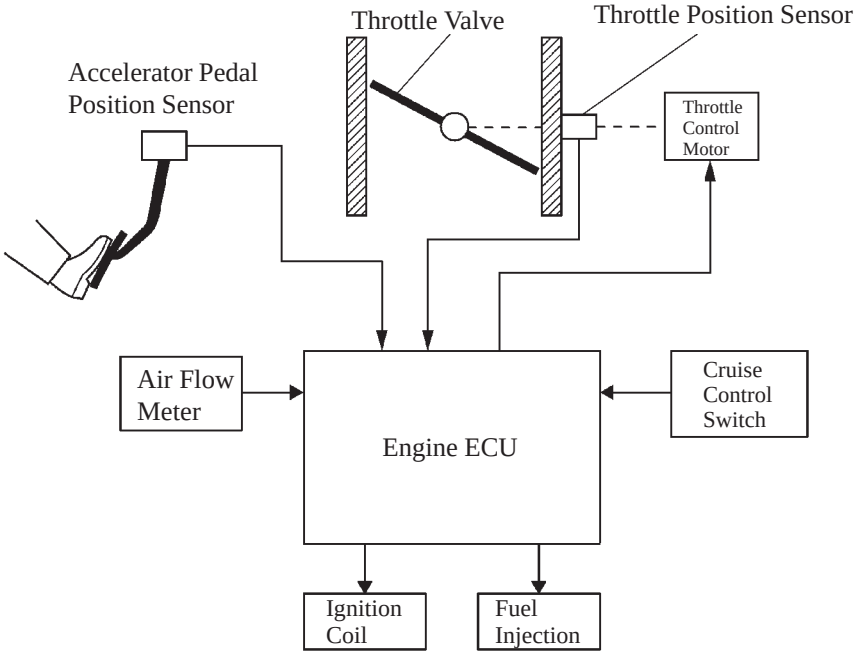

240EG103

Operation

The engine ECU drives the throttle control motor by determining the target throttle valve opening in accordance with the respective operating condition. The 1AZ-FSE engine mainly has the following ETCS-i controls.

Control	Outline
Idle Speed	Controls the engine ECU and the throttle valve in order to constantly effect ideal idle speed control.
TRC Throttle	As part of the TRC system, the throttle valve is closed by a demand signal from the skid control ECU if an excessive amount of slippage is created at a driving wheel, thus facilitating the vehicle in ensuring stability and driving force.
VSC Coodination	In order to bring the effectiveness of the VSC system control into full play, the throttle valve opening angle is controlled by effecting a coordination control with the skid control ECU.
Maximum Vehicle Speed	When the vehicle speed is exceeded the target speed, the engine ECU operates the throttle valve to the closing side and controls the maximum vehicle speed.
Power Train Protect	At the time of multiple shifting down when accelerating, the throttle valve opening is gradually controlled soon after the shift down in order to smooth the driving force change and to protect the driving system parts.
Wheel Locking Protect	On the low μ road, when the driver down-shifted manually to decelerate, ETC (Electronically Controlled Transaxle) controls the opening of the throttle valve gradually in order to protect the driving wheels from locking soon after the deceleration.
Cruise Control System	An engine ECU with an integrated cruise control ECU directly actuates the throttle valve to effect the operation of the cruise control.

Fail-Safe of Accelerator Pedal Position Sensor

- The accelerator pedal position sensor comprise two (main, sub) sensor circuits. If a malfunction occurs in either one of the sensor circuits, the engine ECU detects the abnormal signal voltage difference between these two sensor circuit and switches to the limp mode. In the limp mode, the remaining circuit is used to calculate the accelerator pedal opening, in order to operate the vehicle under limp mode control.

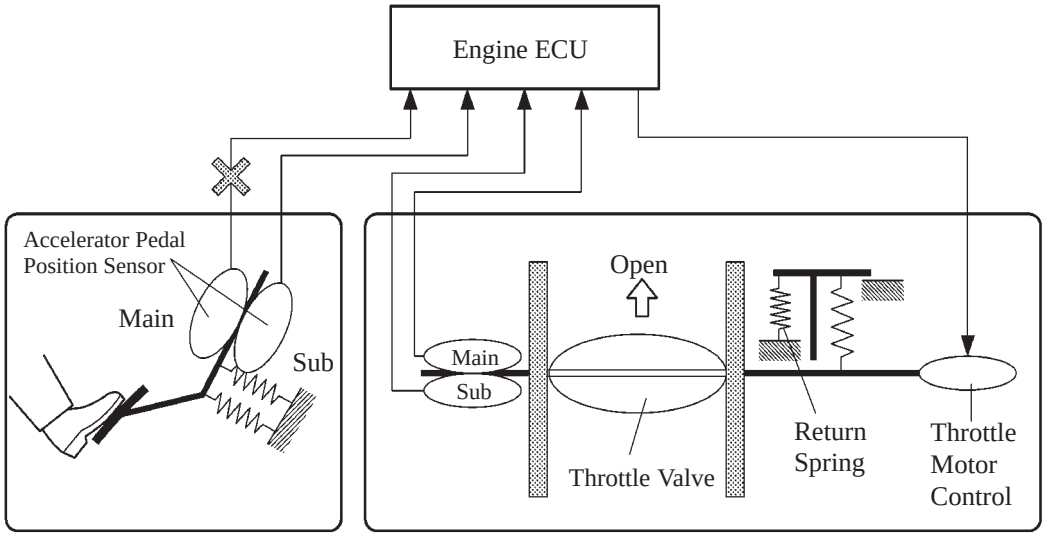

- If both circuits malfunction, the Engine ECU detects the abnormal signal voltage between these two sensor circuits and regards that the opening angle of the accelerator pedal is fully closed and the continues the throttle control. At this time, the vehicle can be driven within its idling range.

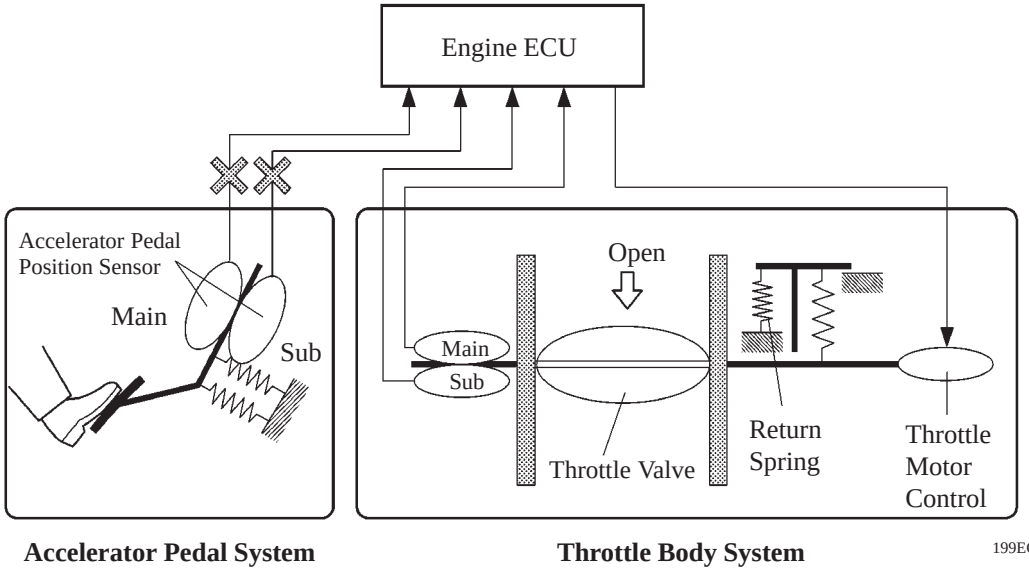

Fail-Safe of Throttle Position Sensor

- The throttle position sensor comprise two (main, sub) sensor circuits. If a malfunction occurs in either one of the sensor circuits, the engine ECU detects the abnormal signal voltage difference between these two sensor circuits, cut off the current to the throttle motor, and switches to the limp mode. Then, the force of the return spring causes the throttle valve to return and stay at the prescribed opening. At this time, the vehicle can be driven in the limp mode while the engine output is regulated through the control of the fuel injection and ignition timing in accordance with the accelerator opening.
- The same control as above is effected if the engine ECU detects a malfunction in the throttle control motor system.

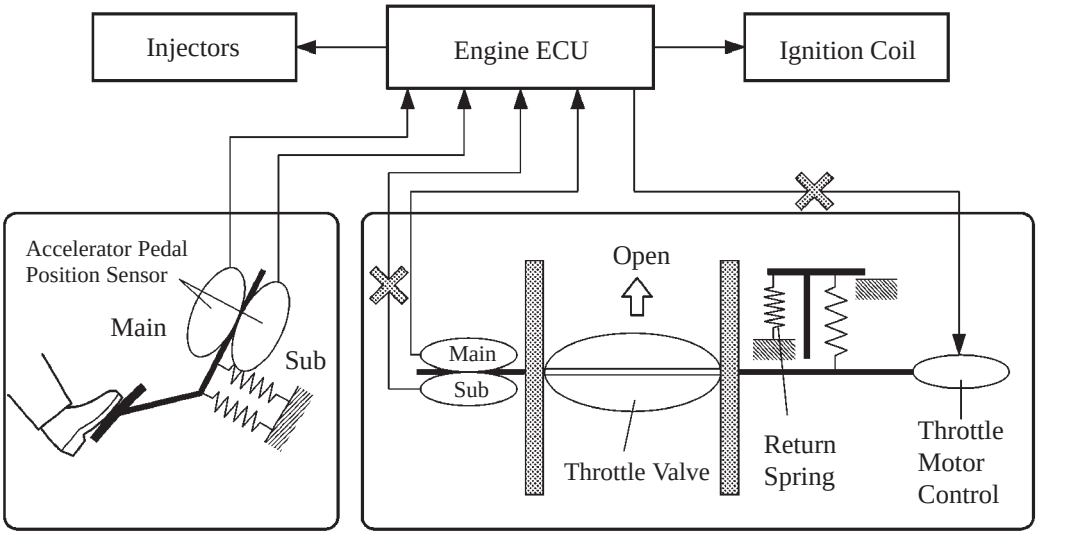

9. Intake Air Control System

- An aluminum die-cast intake air control valve has been provided between the intake manifold and the cylinder head.
- A valve is provided on one of the two intake ports that are provided for each cylinder, and this valve is closed when the engine is operating at low speeds. Thus, increasing the intake air flow velocity and improving the volumetric efficiency. The valve is also closed when the water temperature is low to promote the atomization of fuel by strengthening the swirl in the combustion chamber. As a result, combustion is stabilized.
- According to the operating conditions of the engine, the engine ECU actuates the VSV (for intake air control valve) to turn the intake air control valve ON/OFF by regulating the vacuum that is applied to the actuator. This uses the vacuum that is stored in the vacuum tank, which is integrated in the intake manifold.
- The engine ECU monitors the operating condition (Open/Close) of intake air control valve by the signal from manifold pressure sensor.

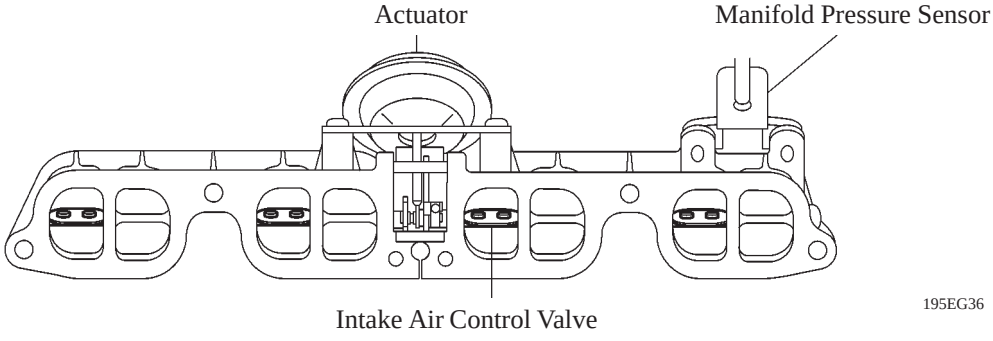

▶ System Diagram ◀

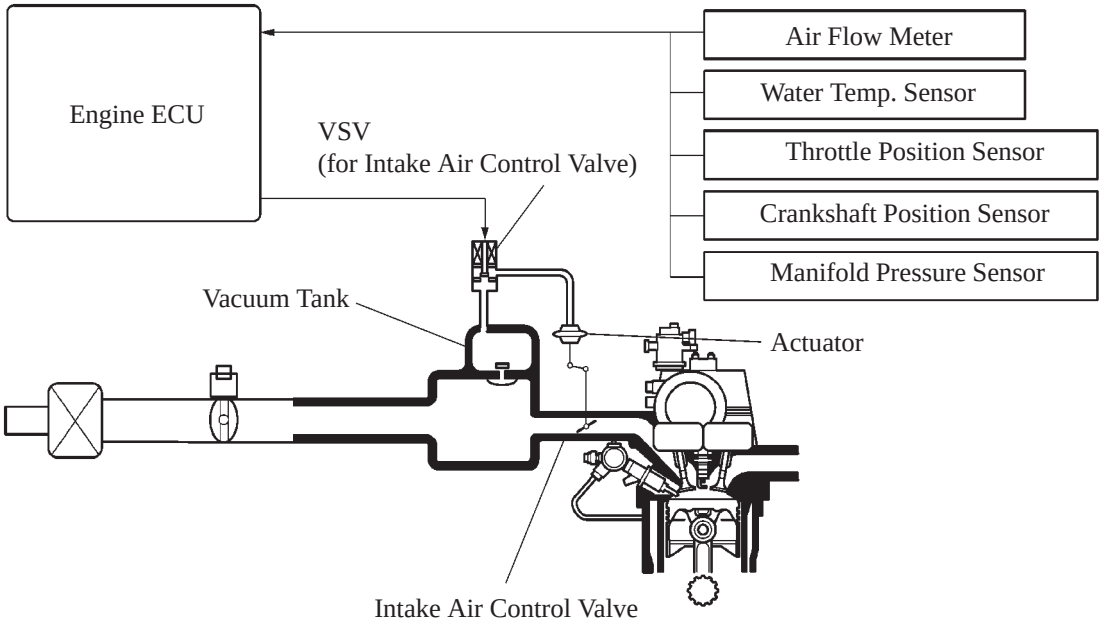

10. TWC Warm-up Control

While a cold engine is being started, this control regulates the ignition timing and the throttle valve in order to improve the warm-up performance of the TWC (Three-Way Catalytic Converter).
The engine ECU effects this control based on the signals from the water temperature sensor and the brake booster pressure sensor.

- When the water temperature is below a predetermined value, the engine ECU retards the ignition timing to the maximum level in order to raise the exhaust gas temperature. Consequently, the high-temperature exhaust gas, which is in the middle of combustion, flows into the exhaust manifold, in order to warm up the TWC at an early stage.
- Retarding the ignition timing to the maximum level will reduce combustion efficiency. Therefore, the engine ECU opens the throttle valve in order to prevent the engine output from decreasing. The intake manifold vacuum pressure decreases at this time. Therefore, the engine ECU monitors the brake booster pressure, and if this pressure is too low, the ECU reduces the amount of retard of the ignition timing and shortens the control duration in order to prevent the vacuum pressure from dropping.

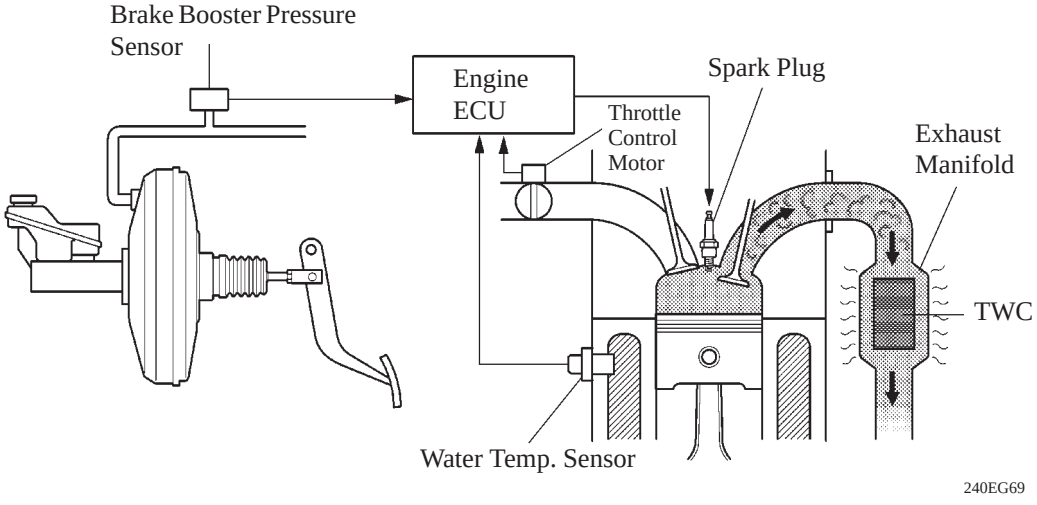

11. Diagnosis

- The diagnosis system of the 1AZ-FSE engine uses the EURO-OBD (Europe On-Board Diagnosis) that complies with European regulations.
- When the Engine ECU detects a malfunction, the Engine ECU makes a diagnosis and memorizes the failed section. Furthermore, the check engine warning light in the combination meter illuminates or blinks to inform the driver.
- At the same time, the DTCs (Diagnostic Trouble Codes) are stored in memory. The DTCs can be read by connecting a hand-held tester.
- The DTCs have been further divided to correspond to SAE codes.
- For details, see the AVENSIS Repair Manual (Pub. No. RM1018E).

12. Fail-Safe

When the Engine ECU detects a malfunction, the Engine ECU stops or controls the engine according to the data already stored in the memory as the following condition.

▶ Fail-Safe Control List ◀

DTC	Fail-safe Operation	Fail-safe Deactivation Conditions
P0031, P0032, P0037, P0038, P0051, P0052, P0057, P0058	Faulty heater circuit turned off.	Ignition switch OFF
P0100, P0102, P0103	Ignition timing is calculated based on an engine speed and a throttle opening angle.	"Pass" detection has occurred. Upon this occurrence, the engine ECU will return to normal mode.
P0105, P0107, P0108	● Intake air pressure is controlled with a calculated value in proportion to the throttle opening angle and the engine speed. ● Limit the engine speed to 3,000 rpm or less.	"Pass" detection has occurred. Upon this occurrence, the engine ECU will return to normal mode.
P0110, P0112, P0113	Intake air temperature is fixed at 20°C (68°F).	"Pass" detection has occurred. Upon this occurrence, the engine ECU will return to normal mode.
P0115, P0117, P0118	Water temperature is fixed at 80°C (176°F).	"Pass" detection has occurred. Upon this occurrence, the engine ECU will return to normal mode.
P0120, P0121, P0122, P0123, P0220, P0222, P0223, P2135	Turn off the power for the throttle motor, return the throttle valve in position using the return spring, and fuel cut intermittent.	Repeat the following conditions at least 2 seconds or more with the throttle position switch closed: ● 0.1 V less than VTA less than 0.95 V ● Engine speed is 0 km/h
P0190, P0191	● Stop the high-pressure pump operation. ● Limit the engine speed to 2,000 rpm or less.	After it is returned to normal condition, turn the ignition switch ON.
P0200	Turn off the INJ relay and cut the power for the EDU.	After it is returned to normal condition, turn the ignition switch ON.
P0201, P0202, P0203, P0204	● Stop fuel injection for an abnormal cylinder and related other cylinders. ● Limit the engine speed to 3,000 rpm or less.	

DTC	Fail-safe Operation	Fail-safe Deactivation Conditions
P0325, P0327, P0328	Maximum timing retardation	Ignition switch OFF
P0351, P0352, P0353, P0354	Stop fuel injection for all the cylinders.	"Pass" detection has occurred. Upon this occurrence, the engine ECU will return to normal mode.
P0604, P0606, P0607, P0657	Turn off the power for the throttle motor, return the throttle valve in position using the return spring, and fuel cut intermittent.	After it is returned to normal condition, turn the ignition switch ON.
P1235	● Stop the high-pressure pump operation. ● Limit the engine speed to 2,000 rpm or less.	After it is returned to normal condition, turn the ignition switch ON.
P2008	Force IACV to close.	After it is returned to normal condition, turn the ignition switch ON.
P2102, P2103, P2111, P2112, P2118, P2119	Turn off the power for the throttle motor, return the throttle valve in position using the return spring, and fuel cut intermittent.	After it is returned to normal condition, turn the ignition switch ON.
P2120, P2121, P2122, P2123, P2125, P2127, P2128, P2138	● If both VPA1 and VPA2 are malfunctioning: Fixed at idle ● If either of VPA1 or VPA2 is malfunctioning: Fuel cut intermittently	After it is returned to normal condition, turn the ignition switch ON.

1CD-FTV ENGINE

■ DESCRIPTION

The 1CD-FTV TOYOTA D-4D (Direct injection 4 Stroke common-rail Diesel) engine is in-line 4-cylinder, 2.0 liter, 16-valve DOHC turbocharged with intercooler diesel engine.
This engine is used direct injection system and common-rail system to realize higher performance, clean emission, low noise and low vibration.
For the main changes made to this engine from the previous model, see page EG-133.

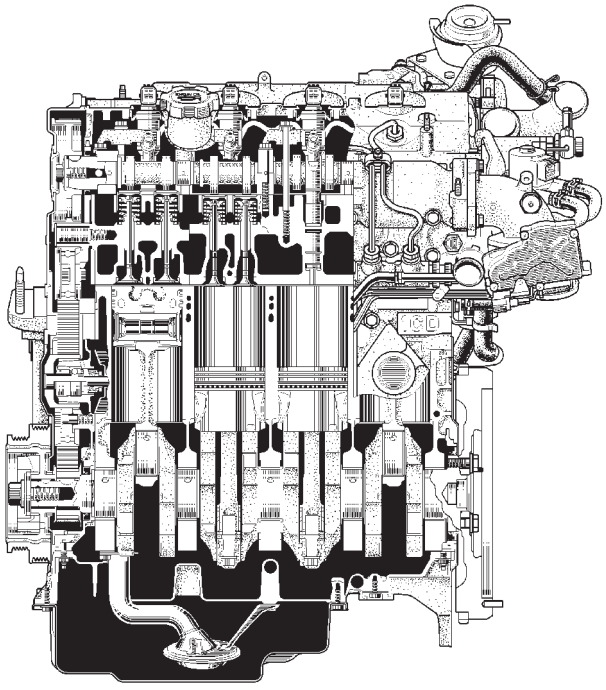

240EG124

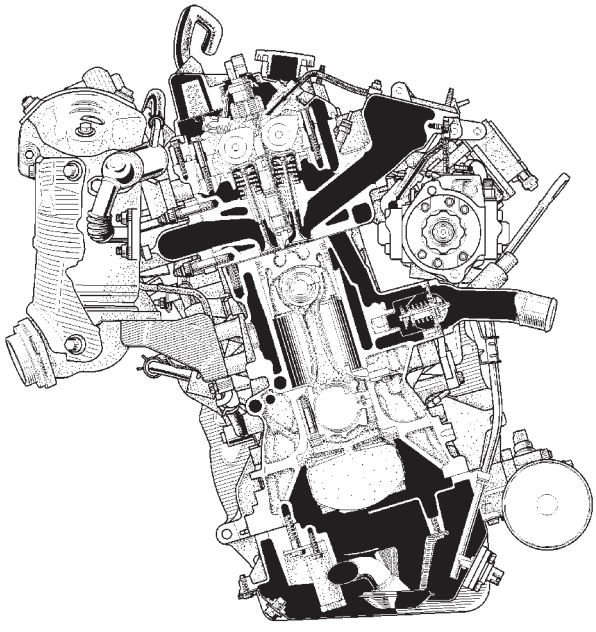

240EG25

▶ Engine Specification ◀

Model			New	Previous
No. of Cyls. & Arrangement			4-Cylinder, In-line	←
Valve Mechanism			16-Valve DOHC, Belt and Gear Drive	←
Combustion Chamber			Direction Injection Type	←
Manifolds			Cross-Flow	←
Fuel System			Common-Rail Type	←
Displacement cm^3 (cu. in.)			1995 (121.7)	←
Bore x Stroke mm (in.)			82.2 x 94.0 (3.24 x 3.7)	←
Compression Ratio			17.8 : 1	18.6 : 1
Max. Output [EEC]			85 kW @ 3600 rpm	81 kW @ 4000 rpm
Max. Torque [EEC]			280 N·m @ 2000 – 2200 rpm	250 N·m @ 2000 – 2400 rpm
Valve Timing	Intake	Open	2° BTDC	←
		Close	31° ABDC	←
	Exhaust	Open	51° BBDC	←
		Close	0° ATDC	←
Firing Order			1 – 3 – 4 – 2	←
Fuel Cetane Number			48 or more	←
Emission Regulation			European STEP IV	European STEP III
Oil Grade			ACEA B1, API CF-4 or CF	API CF-4 or CF
Engine Service Mass* (Reference) kg (lb)			203 (447.5)	195 (429.9)

*: Weight shows the figure with oil and water fully filled.

▶ Valve Timing ◀

: IN Valve Opening Angle
: EX Valve Opening Angle

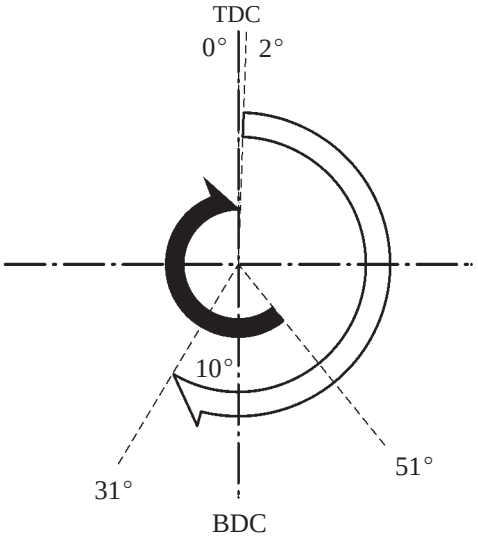

240EG95

■ MAJOR DIFFERENCE (from Previous Model)

Item		Outline
Engine Proper (See page EG-135)	Cylinder Head Cover	The oil filler cap has been relocated.
	Crankshaft Pulley	The crankshaft pulley with bending dumper has been adopted.
	Crankshaft Block	The cylinder block has been added ribs.
Lubrication System (See page EG-142)		● The oil filter has been relocated. ● A service hole for changing the engine oil and replacing the oil filter are provided in the engine under cover.
Intake and Exhaust System (See page EG-146)		● A water passage has been provided in EGR valve and EGR cooler. ● A step motor has been adopted on the EGR valve. ● The water-cooling type EGR cooler has been adopted. ● A variable nozzle vane type turbocharger has been adopted. ● A large-size oxidation catalytic converter has been adopted to comply with the European STEP IV regulations. ● The side tanks of the intercooler have been changed to plastic.
Fuel System (See page EG-152)		● Lightweight and compact supply pump has been adopted. ● A pressure discharge valve and a new fuel pressure sensor has been adopted in the common rail. ● An injector compensation value and a QR code are printed on the injector to realize high-precision control.
Charging System (See page EG-160)		● A one-way clutch function has been provided in the alternator pulley. ● V-ribbed belt has been adopted to alternator drive belt, and automatic tensioner has been adopted to belt tensioner. ● Segment Conductor type alternator has been adopted.
Engine Control System (See page EG-163)		● The 32-bit CPU of the engine ECU has been adopted. ● The DTCs (Diagnostic Trouble Codes) have been further divided to correspond to SAE codes. ● The accelerator pedal switch has been discontinued. ● A vacuum regulating valve and VSV for EGR have discontinued. ● A turbocharger control has been adopted.

■FEATURES OF 1CD-FTV ENGINE

The 1CD-FTV engine has been able to achieve the following performance through the adoption of the item listed below:

(1) High performance and fuel economy

(2) Low noise and vibration

(3) Lightweight and compact design

(4) Good serviceability

(5) Clean emission

Item		(1)	(2)	(3)	(4)	(5)	New	Previous
Engine Proper	Oil filler cap relocated to the front of the vehicle.				○		○	—
	Cylinder head made of aluminum alloy is used.			○			○	○
	Piston provided with combustion chamber has been adopted in conjunction with the adoption of direct injection.	○				○	○	○
	A camshaft is driven by a timing belt and gear.	○	○	○	○		○	○
	An automatic tensioner is provided for the timing belt.				○		○	○
Intake and Exhaust System	An EGR and a catalytic converter are used.					○	○	○
	The water cooling type EGR Cooler has been adopted.					○	○	—
	A step motor has been adopted on the EGR valve to enable the engine ECU to directly control the EGR valve.					○	○	—
	Variable nozzle vane type turbocharger is used.	○				○	○	—
Fuel System	HP3 type supply pump has been adopted.	○	○	○			○	—
	A common rail type fuel injection system is used.	○	○			○	○	○
	Compensation value and QR code printed injector is used.	○				○	○	—
Charging System	Segment Conductor type Alternator is used.			○			○	—
Engine Control System	A pilot injection control system is used.	○	○	○			○	○

■ENGINE PROPER

1. Cylinder Head Cover

In conjunction with the application of this engine on the new model, the oil filler cap has been relocated to the front of the vehicle in consideration of serviceability.

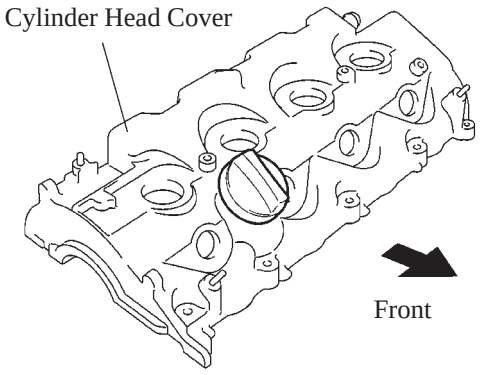

240EG14

2. Cylinder Head

- The cylinder head is made of aluminum alloy.
- The injector is located in the center of the combustion chamber in order to improve engine performance and clean emission.
- A glow plug is placed between the intake ports of each cylinder to ensure startability.

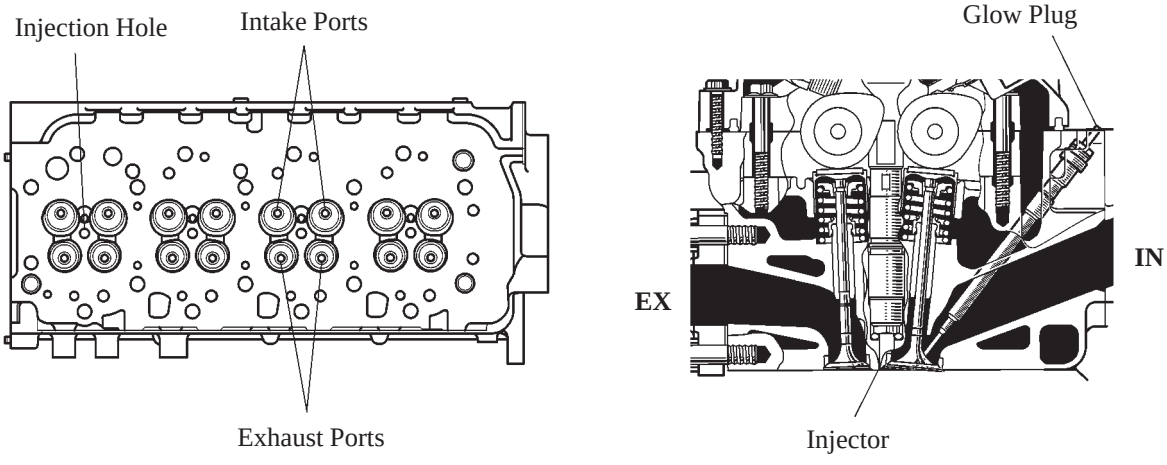

201EG04

3. Cylinder Head

This gasket has adopted a 3-layer steel laminate construction.

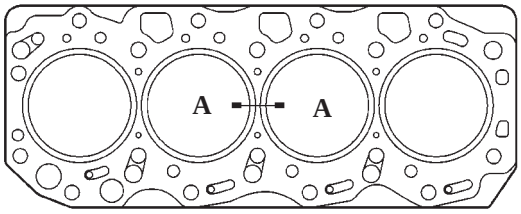

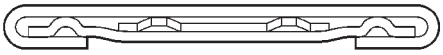

A – A Cross Section

201EG06

Service Tip

There are 5 sizes of new cylinder heads gaskets, Marked “A”, “B”, “C”, “D”, or “E”, according to Piston protrusion, For details, refer to see the Avensis Repair Manual (Pub. No. RM1018E).

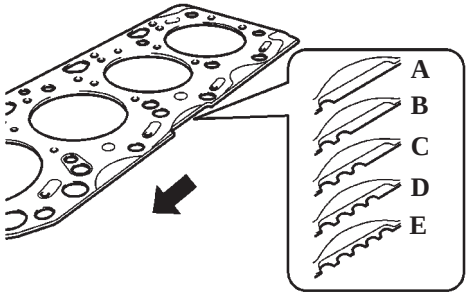

201EG07

4. Cylinder Block

- This cylinder block is constructed of linerless cast iron alloy.
- By making the rear surface of the cylinder block in a box shape, thus aimed to realize low vibration high rigidity and lightweight.
- By adoption of the rib and implementation of the wall thickness improvement for the cylinder block, optimal strength is secured.
- By expanding the thermostat housing and reducing the water flow resistance, thus improved the cooling performance.

— Change (from Previous Model) —

Along with the expansion of the oil pump capacity and the relocation of the oil filter, the oil passage has been changed and the suction hole diameter has been increased in order to ensure the proper lubrication performance.

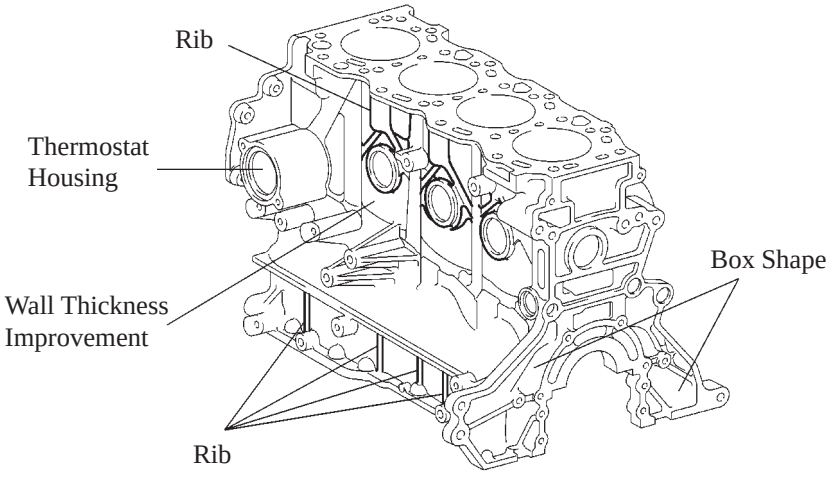

240EG35

5. Piston, Piston Pin and Piston Ring

- In conjunction with the adoption of direct injection, piston provided with combustion chamber has been adopted.
- A cooling channel has been provided to reduce the piston temperature.
- To improve the wear resistance of the top ring groove, a Ni-resist cast iron ring carrier has been adopted.
- Along with the improved engine performance, the piston skirt has been applied with resin coating to reduce friction loss.
- Full floating type piston pins are used.

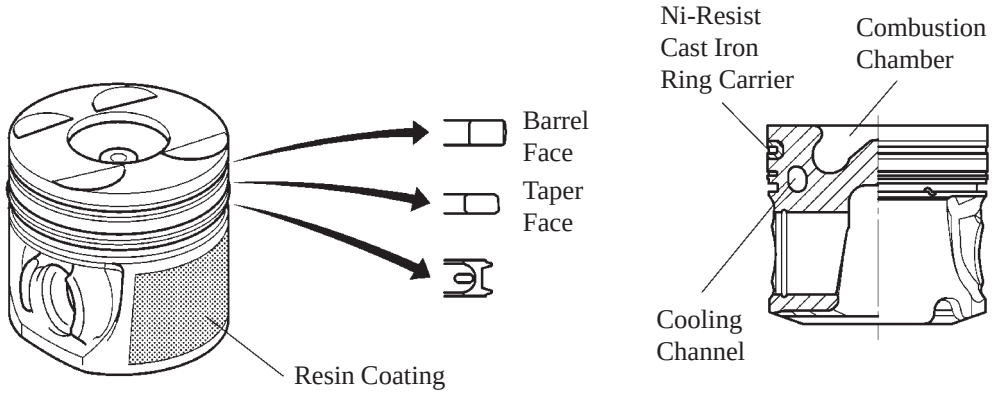

240EG105

6. Connecting Rod

To accommodate the high combustion pressure generated by the direct injection, this connecting rod is constructed of a special type of carbon steel that ensures the proper strength.

7. Crankshaft

- The forged crankshaft with 5 main journals, 4 connecting rod pins and 8 balance weights is used.
- The crankshaft pins and main journals have been induction-hardened to ensure their reliability.

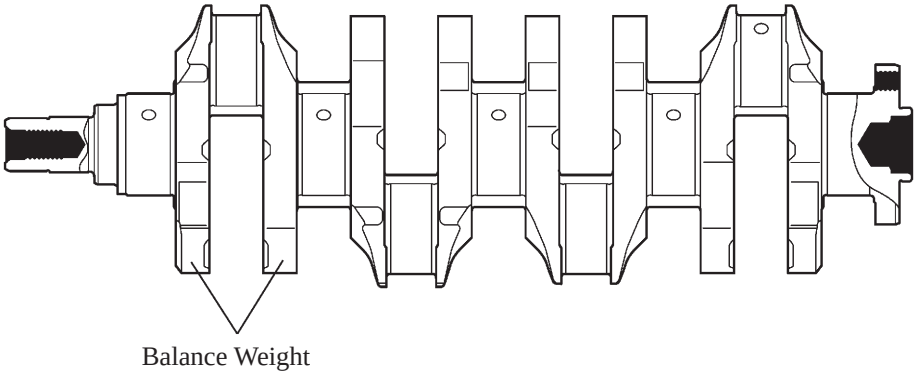

240EG106

8. Crankshaft Pulley

- The crankshaft pulley with bending dumper has been adopted to reduce noise and vibration.

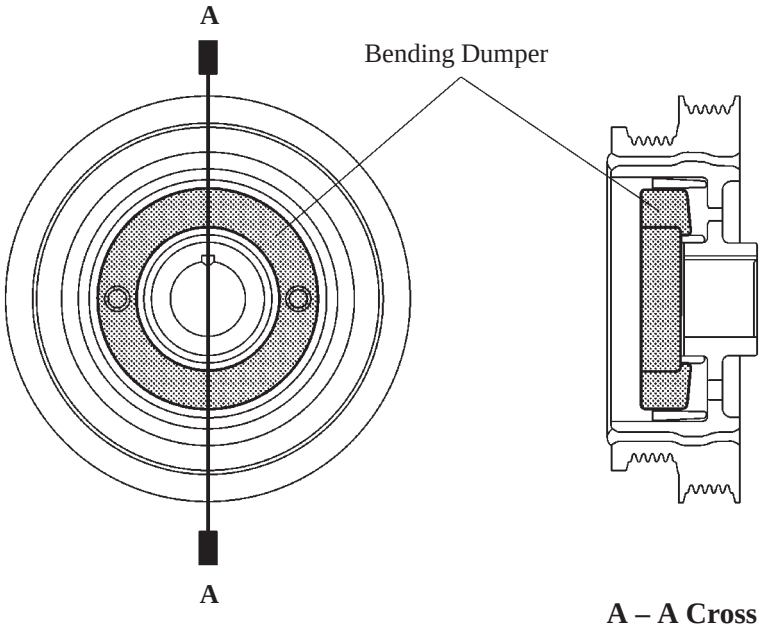

A – A Cross Section

206EG43

■VALVE MECHANISM

1. General

- Intake and exhaust efficiency is increased by means of the larger total port areas.
- Outer type valve adjusting shims, which are located on top of the valve lifter.
- A vacuum pump is driven by exhaust camshaft.
- The exhaust camshaft is driven by a timing belt, while the intake camshaft is driven through gear on the exhaust camshaft.
- Small-diameter, and flat-teeth gear are used for driving the intake camshaft in order to reduce gear noise.
- The cam nose has been chill treated to ensure its abrasion resistance.
- The automatic tensioner is used on the timing belt.

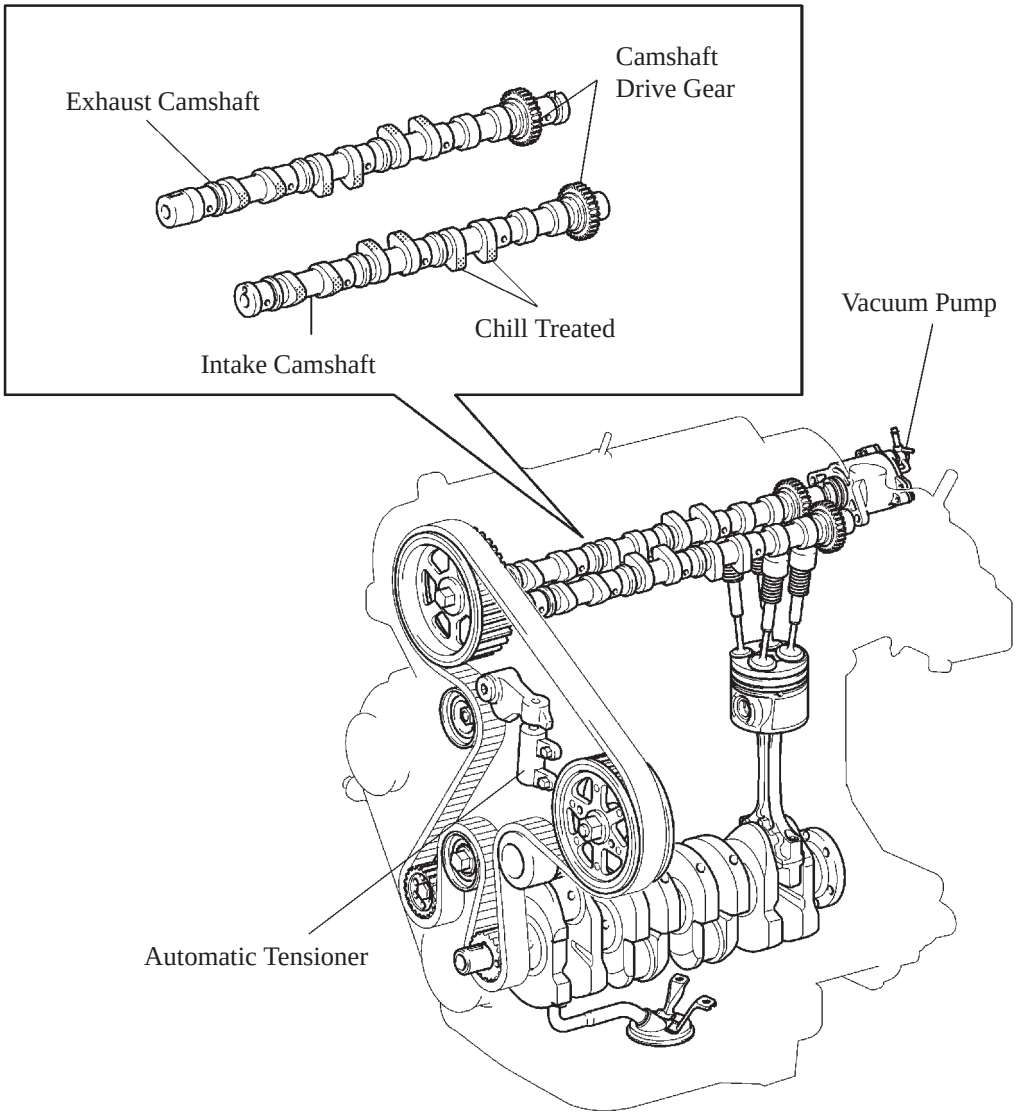

216EG07

2. Intake and Exhaust Valves

- This construction allows the adjusting shim to be replaced without removing the camshaft, which realizes the serviceability during valve clearance adjustment.
- A cutoff is provided in the valve lifter to realize the serviceability of the replacing the adjusting shims.

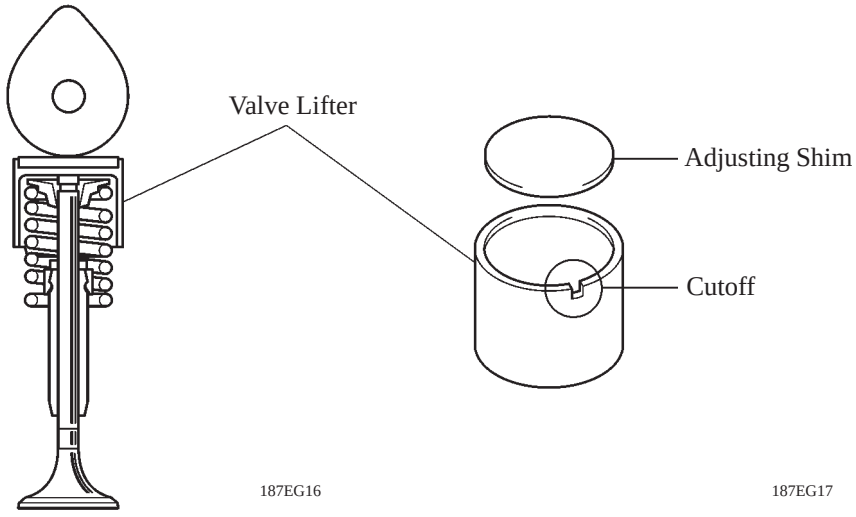

Service Tip

Adjusting shims are available in 17 increments of 0.050 mm (0.0020 in.), from 2.50 mm (0.0984 in.) to 3.30 mm (0.1299 in). For details, refer to see the Avensis Repair Manual (pub. No. RM1018E).

4. Timing Belt Relation

The automatic tensioner suppresses noise generated by the timing belt.

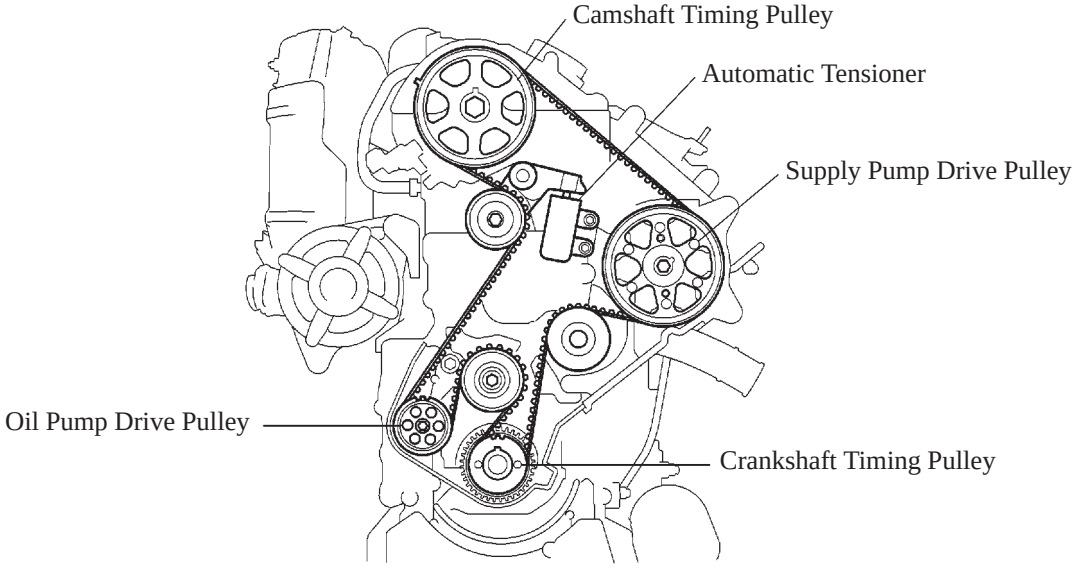

■LUBRICATION SYSTEM

- The lubrication circuit is fully pressurized and all oil passes through an oil filter.
- A trochoid gear type oil pump is driven by the timing belt.
- The water-cooled type engine oil cooler is used to lower the oil temperature.
- Oil jets have been provided for cooling the pistons.
- An oil level sensor is provided in the oil pan for efficient servicing.

— Change (from Previous Model) —

- The oil filter has been relocated in order to ensure serviceability.
- The oil pump discharge volume has been increased.
- To improve serviceability, a service hole for changing the engine oil and replacing the oil filter are provided in the engine under cover.

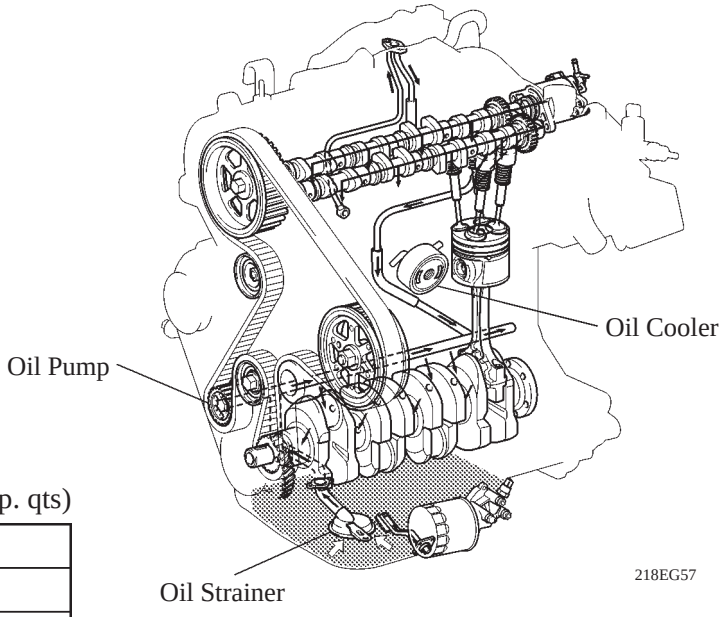

▶ Oil Capacity ◀

	liters (US qts, Imp. qts)
Dry	6.7 (7.1, 5.9)
with Oil Filter	5.9 (6.2, 5.2)
without Oil Filter	5.3 (5.6, 4.7)

▶ Engine Under Cover ◀

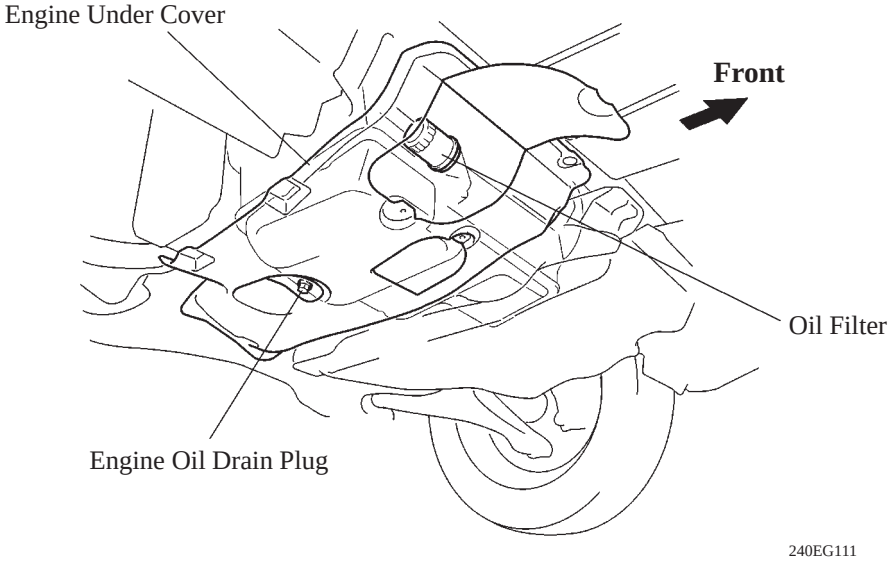

▶ Oil Circuit ◀

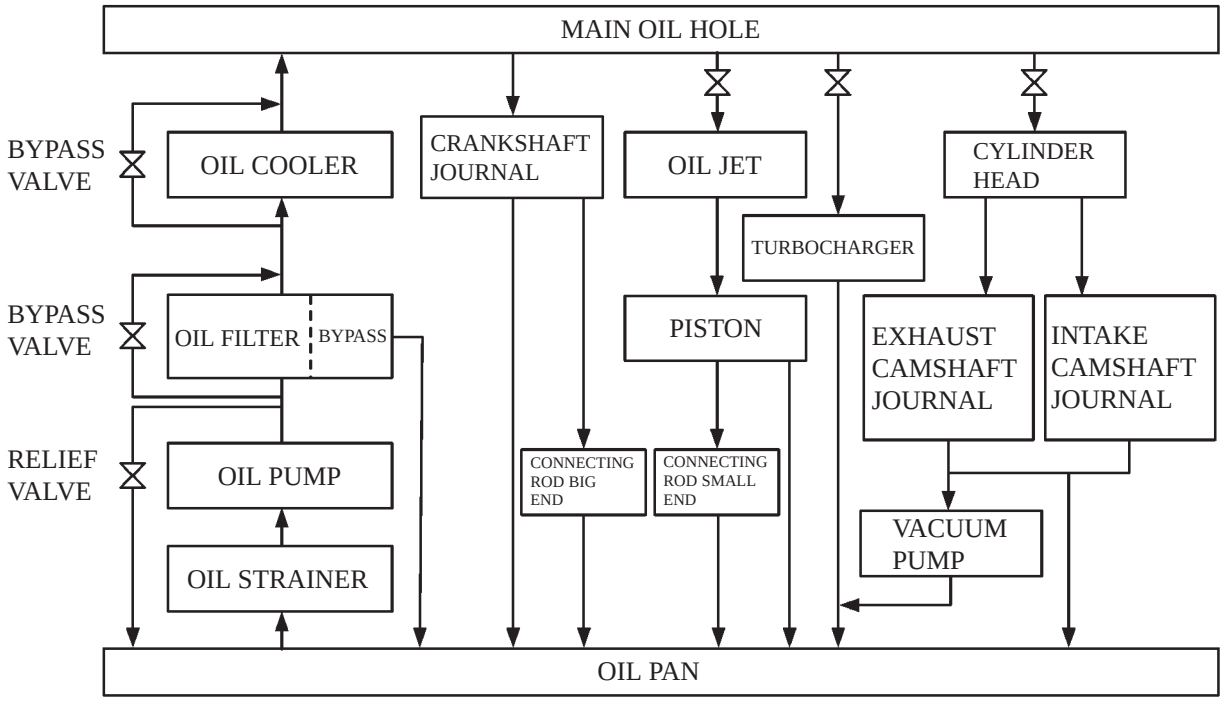

240EG126

EG

■COOLING SYSTEM

General

- The cooling system is a pressurized, forced-circulation type.
- A pressurized reservoir tank has been adopted to prevent the engine coolant deteriorating upon contact with external air.
- A thermostat, having a bypass valve, is located on the water pump inlet side of the coolant circuit. As the coolant temperature rises, the thermostat open the water bypass passage closes, so the system maintains suitable temperature distribution in the cylinder head.
- An aluminum radiator core is used for weight reduction.

— Change (from Previous Model) —

- A water passage has been provided for cooling the EGR valve.
- A water-cooled EGR cooler has been provided.

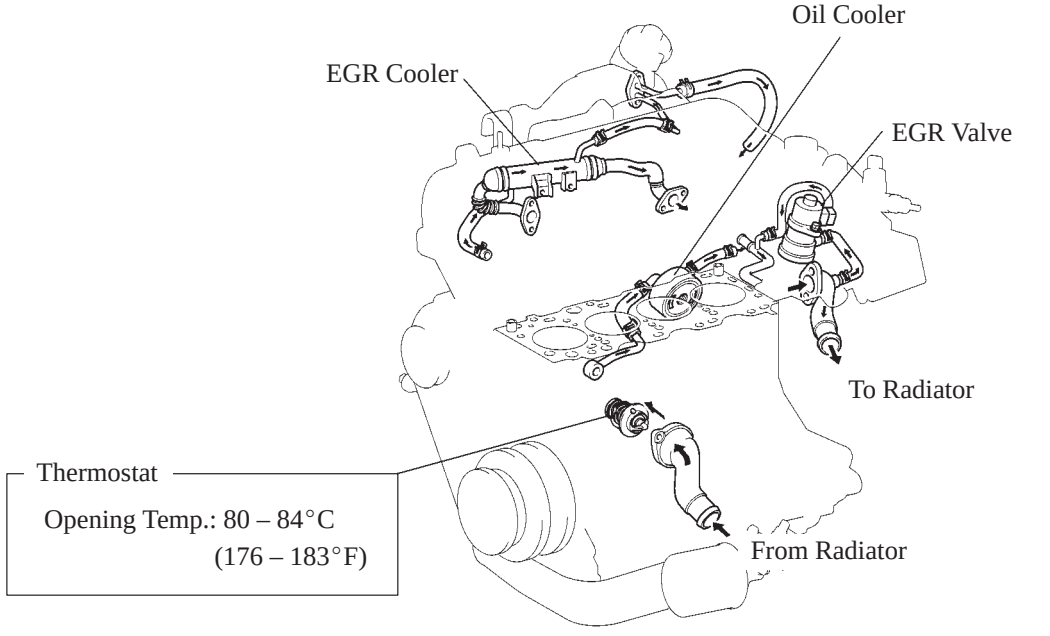

240EG127

▶ Engine Coolant ◀

Capacity	with Combustion Type Power Heater	7.6 liters (8.0 US qts, 6.7 Imp. qts)
	without Combustion Type Power Heater	7.4 liters (7.8 US qts, 6.5 Imp. qts)
Type	TOYOTA Genuine Super Long Life Coolant or equivalent	

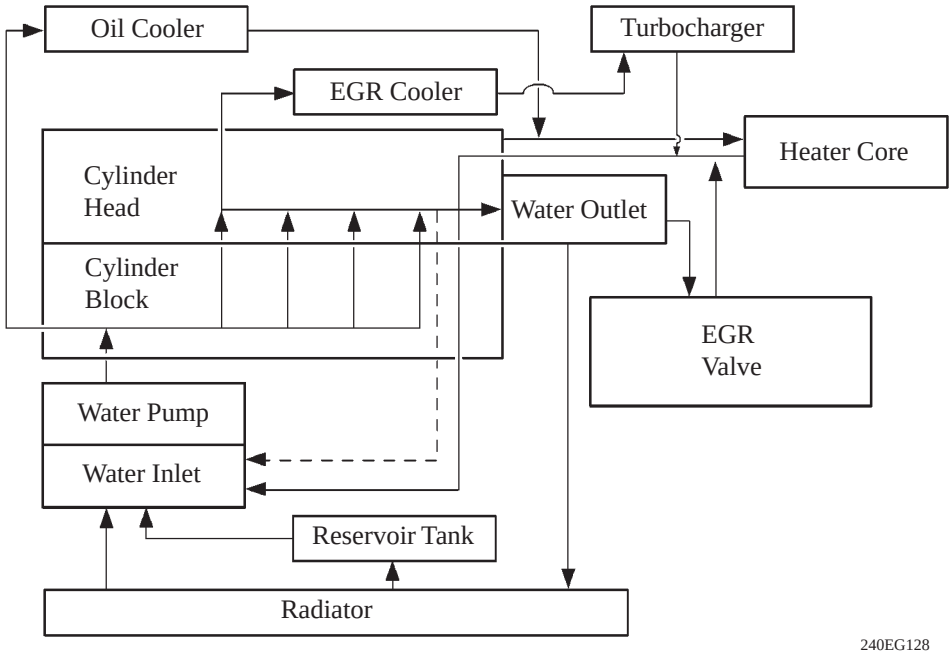
Oil Cooler
Turbocharger
EGR Cooler
Heater Core
Cylinder Head
Water Outlet
Cylinder Block
EGR Valve
Water Pump
Water Inlet
Reservoir Tank
Radiator
240EG128

■INTAKE AND EXHAUST SYSTEM

1. General

- An equal-length port intake manifold provided with an intake chamber is used in order to reduce the swirl variances among the cylinders.
- A step motor type intake restrictor valve is used to improve EGR performance and to reduce the vibration when stopping the engine.
- An air cooled intercooler is used in order to lower the intake air temperature, improve engine performance, and to realize cleaner exhaust gas emissions.
- 2 ball joints are used to joint the exhaust manifold to the exhaust front pipe, and exhaust front pipe to exhaust tail pipe. As a result, a simple construction and improved reliability have been realized.

— Change (from Previous Model) —

- A step motor has been provided on the EGR valve. Accordingly, the vacuum regulating valve and the VSV (for cutoff) have been discontinued.
- The water-cooling type EGR cooler has been adopted.
- A variable nozzle vane type turbocharger has been adopted.
- The size of the oxidation catalytic converter in the exhaust manifold converter has been increased to comply with the European STEP IV regulations.
- Both tanks of the intercooler are made of plastic to reduce weight.

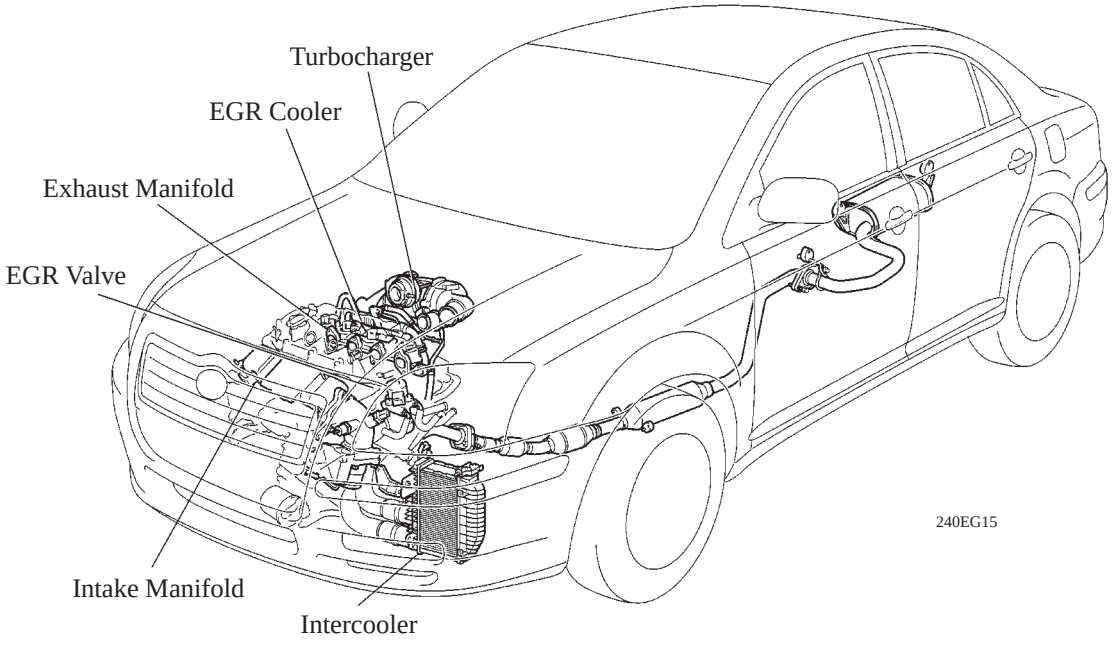

Intercooler

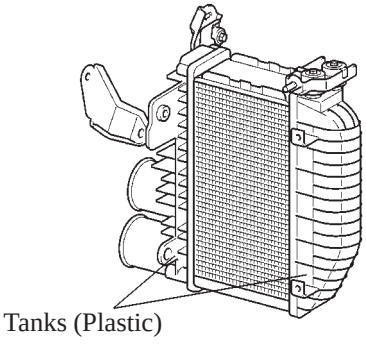

Ball Joint

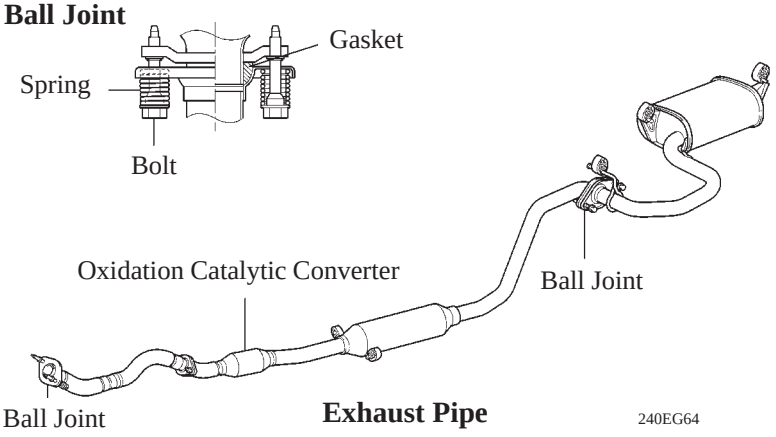

2. EGR System

This system is designed to help reduce and control NOx formation due to a slight reduction of peak temperature in the engine combustion chamber, which is accomplished by introducing a small amount of inert gas into intake manifold.
By adopting the exhaust gas passage in the cylinder head and the water cooling type EGR cooler, this makes it possible to lower the temperature of the exhaust gas and re-circulate the great amount of exhaust gas.

- A step motor has been adopted on the EGR valve to enable the engine ECU to directly control the EGR valve.
- The engine coolant circulates through the EGR valve to ensure proper cooling performance.

▶ EGR Valve ◀

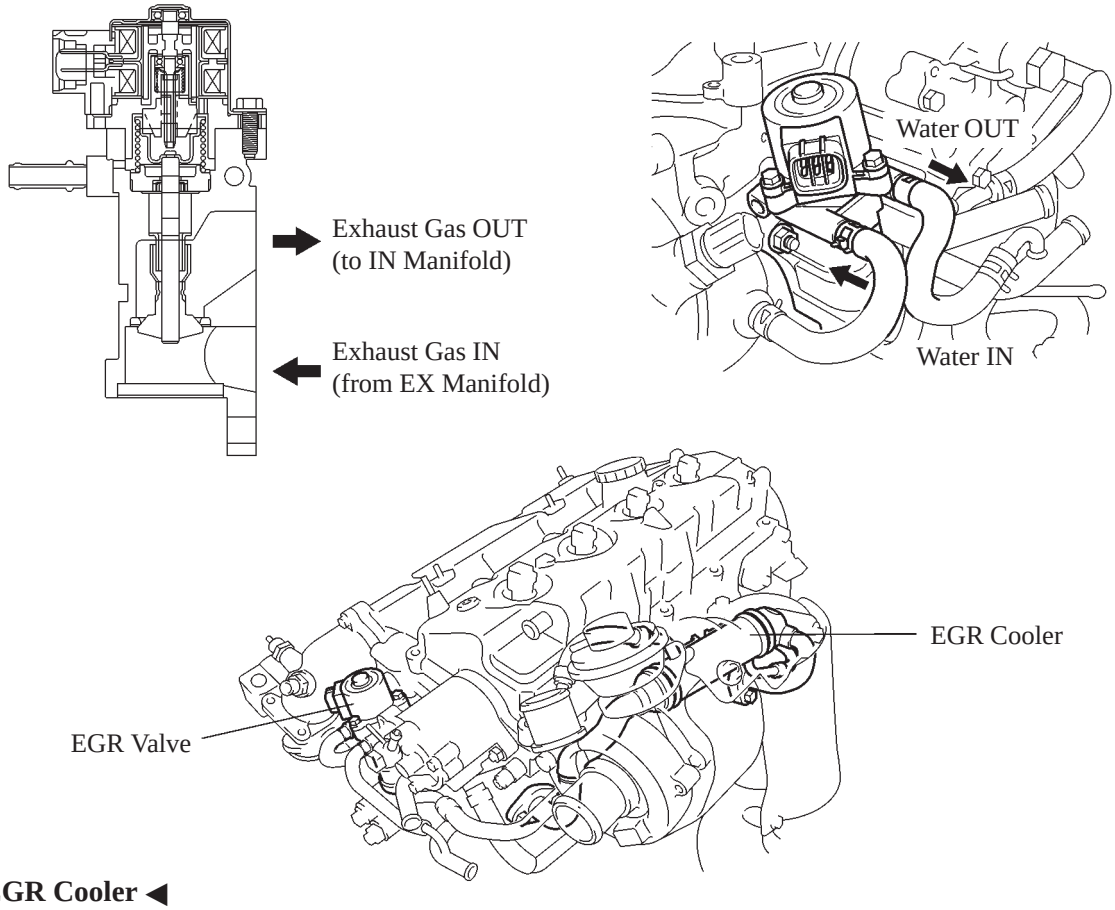

▶ EGR Cooler ◀

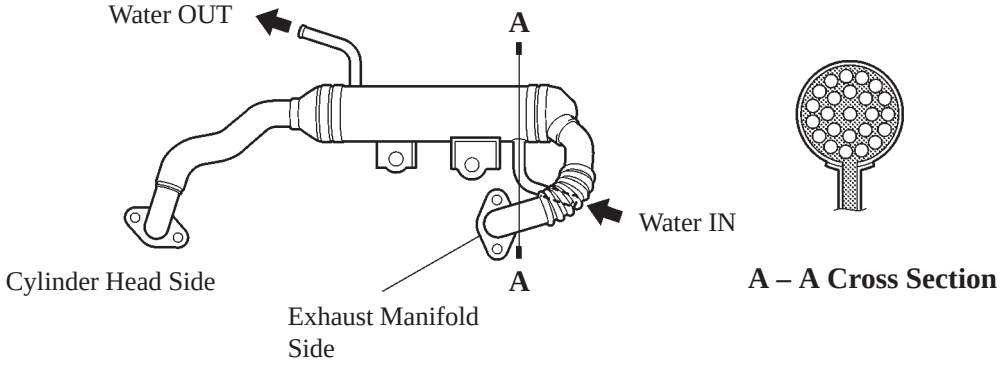

240EG139

3. Turbocharger

General

- This turbocharger has realized great improvements to low speed torque, maximum output, fuel consumption and noise and emission reduction by controlling the nozzle vane variably and making the most suitable velocity of the exhaust gas inflow to the turbine at all times in response to the engine condition.
- The actuator is actuated by the vacuum pressure that has been regulated by the VRV (Vacuum Regulating Valve) in accordance with the signals from the engine ECU.

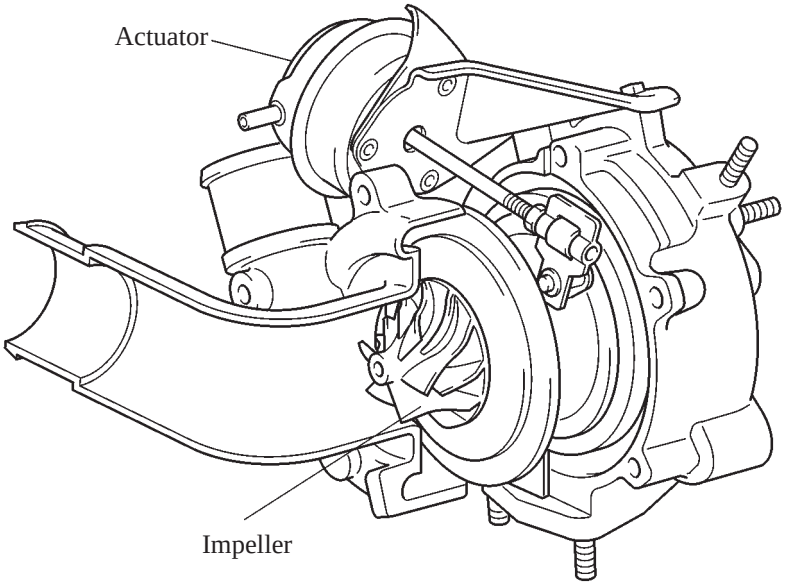

240EG17

- The exhaust gas from the exhaust manifold goes through the nozzle vane inside the turbo charger housing, and flows to the exhaust pipe through the turbine. The speed of the turbine (supercharging pressure) differs depending on the flow velocity of the exhaust gas going through the turbine and the flow velocity of the exhaust gas is controlled by the opening. When idling, the exhaust gas is less and the nozzle vane is fully closed, but as there is a slight clearance between the vanes, the exhaust gas flows through this clearance to the exhaust pipe. Therefore, there is no bypass.

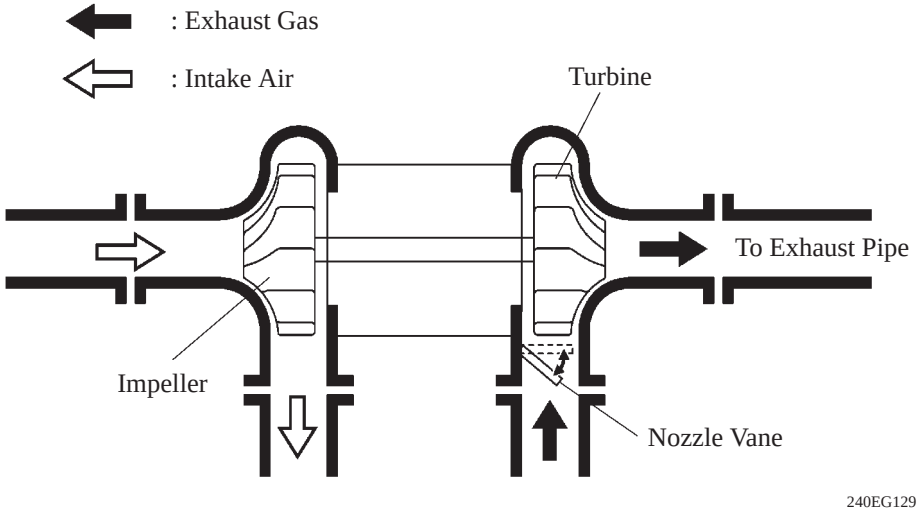

240EG129

Construction

This turbocharger consists primarily of a impeller, turbine, actuator, nozzle vane, and unison ring.

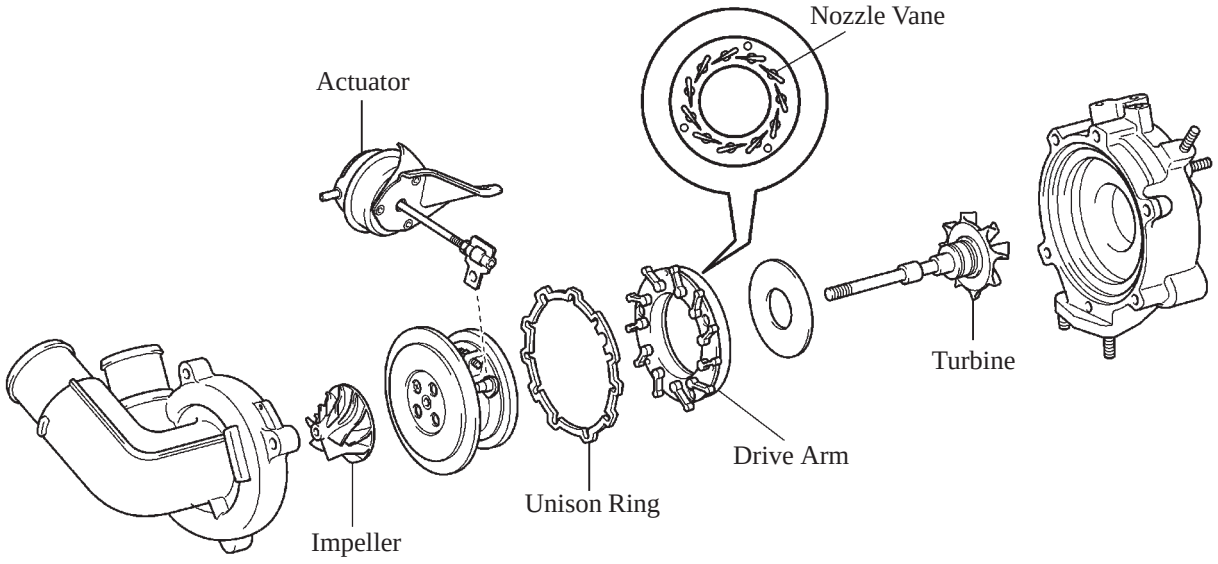

Service Tip

The inspection items and measurement values have been changed in conjunction with the adoption of the variable nozzle vane type turbocharger. Furthermore, this turbocharger cannot be disassembled. For details, refer to the Avensis Repair Manual (Pub. No. RM1018E).

Operation

a) At Low Load Range

When the engine is running in a low load range, the actuator pull up the linkage by a signal from the engine ECU. The tip of the actuator linkage is connected to the unison ring and turns it counter clockwise. The unison ring has a drive arm through the unison ring packet and this drive arm also moves according to the rotation direction of the unison ring. The fulcrum of the drive arm is an axis which is integrated with a nozzle vane behind the plated. When the drive arm moves counter-clockwise, the nozzle vane moves toward closing direction resulting in keeping up the suitable velocity of the exhaust gas running to the turbine and speed of the turbine, and then the torque will be improved when the engine is running at a low load.

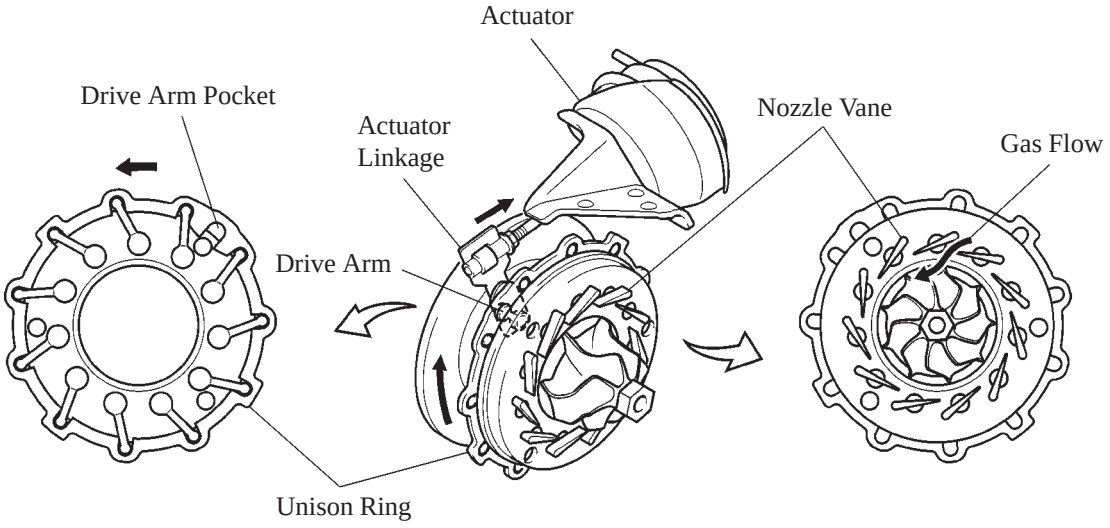

240EG28

b) At High Load Range

When the engine is running in a high load range, the actuator pull down the linkage by a signal from the engine ECU. With this, the drive arm moves clockwise and this opens the nozzle vane and holds the specified supercharging pressure. Thus, lowering the exhaust gas back pressure and improving the out put and fuel consumption.

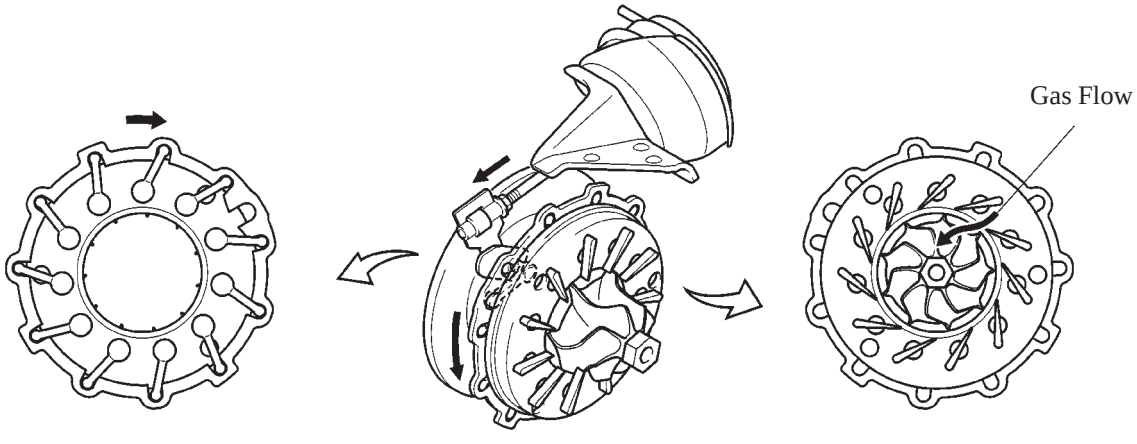

240EG29

6. Exhaust Manifold Converter

The capacity of the oxidation catalytic converter in the exhaust manifold converter has been increased to improve the exhaust gas reduction performance and comply with the European STEP IV regulations.

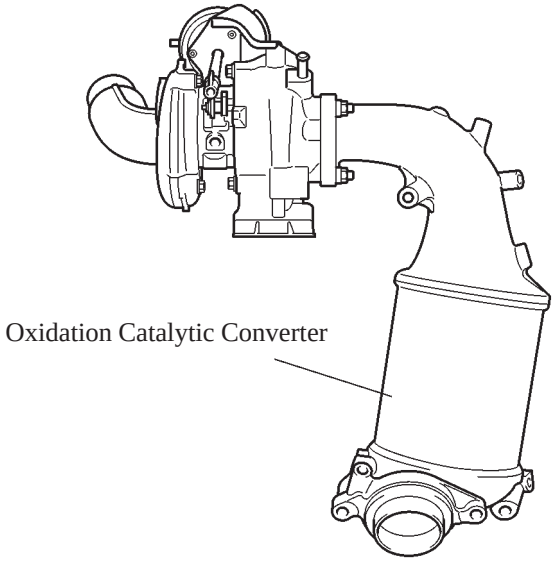

240EG36

■FUEL SYSTEM

1. General

- A quick connector is used to connect the fuel pipe with the fuel hose for excellent serviceability.
- As with the previous model, the new Avensis uses a common-rail fuel injection system.

— Change (from Previous Model) —

In order to achieve higher performance and low emission at accelerated levels, the new Avensis has adopted a common-rail system that supports high injection pressure.
Accordingly, the following changes have been made:

- Change of the common-rail, supply pump, and injector.
- Disconnected of the pressure limiter.
- Adopted of the pressure discharge valve.
- To improve rust resistance, the material of the fuel tank has been changed from metal to plastic. This eliminates plating, as well as the use of lead, in consideration of the environment (See page EG-20) .

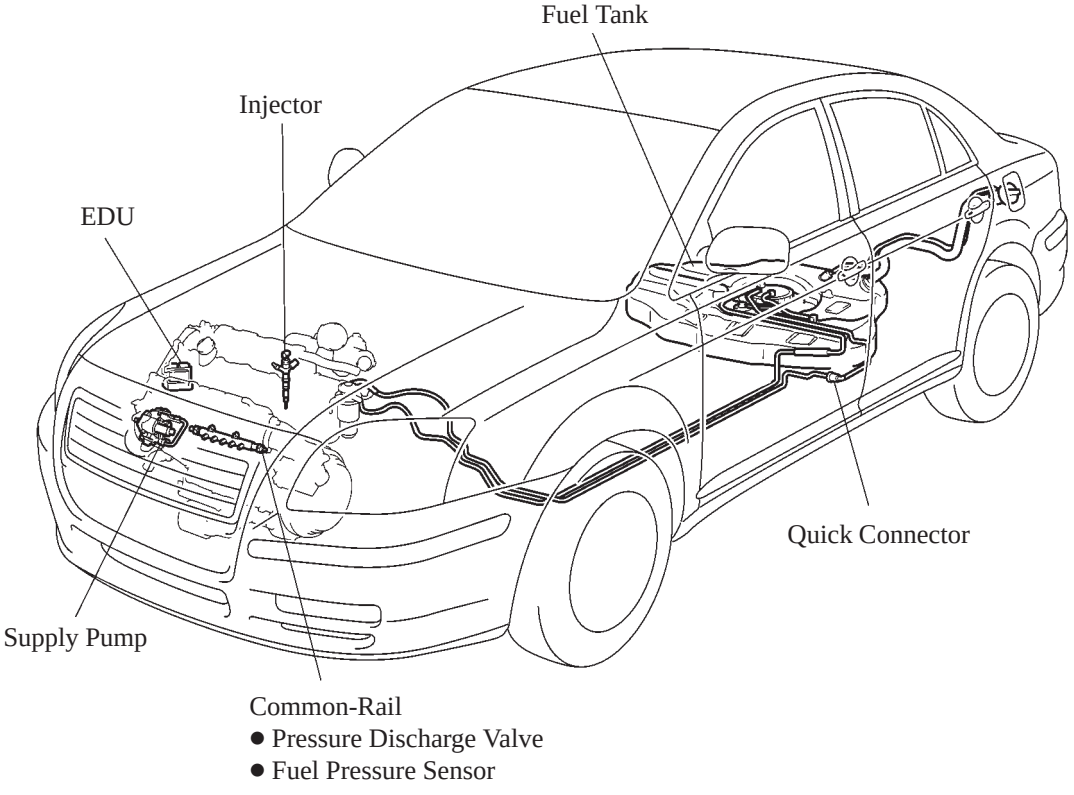

2. Common-Rail System

General

In this system, the high pressurized fuel that is supplied by the supply pump is stored in the common-rail, and the engine ECU sends signals to the injectors via the EDU (Electronic Driver Unit) in order to control the injection timing and injection volume. For details of this control refer to see page EG-172.

▶ System Diagram ◀

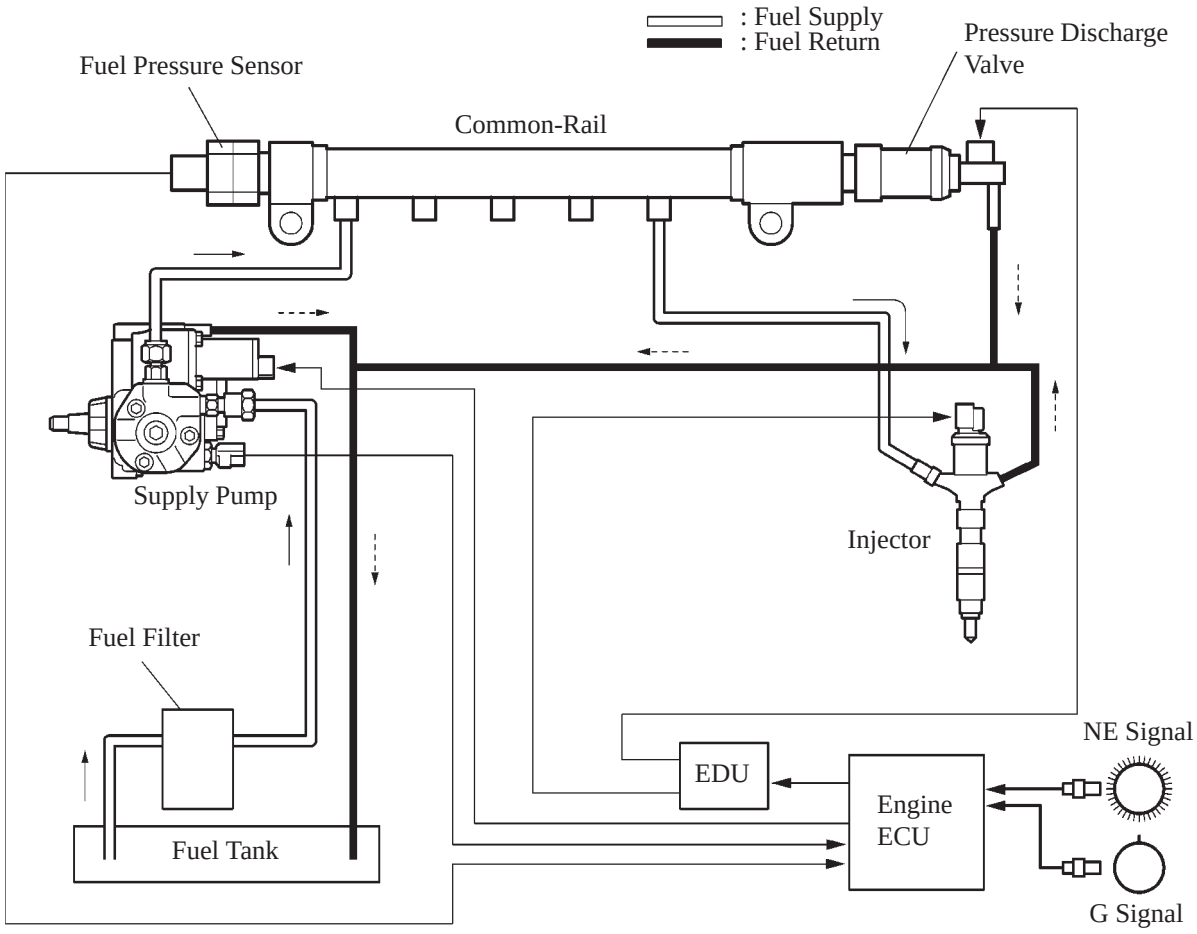

240EG22

Supply Pump

1) General

The conventional, 4-plunger, HP2 (Inner Cam) type supply pump of the 1CD-FTV engine has been changed to a 2-plunger, HP3 (Outer Cam) type. As a result, the pump has been made more compact and its overall length has been shortened.

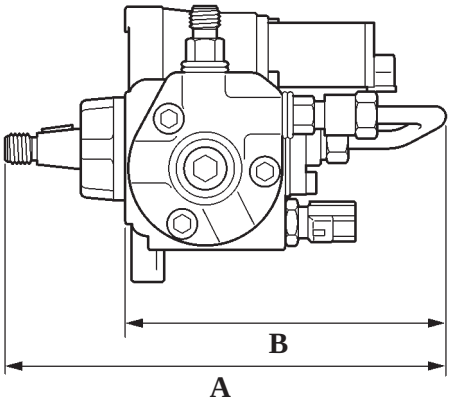

HP3 Type (New Model)

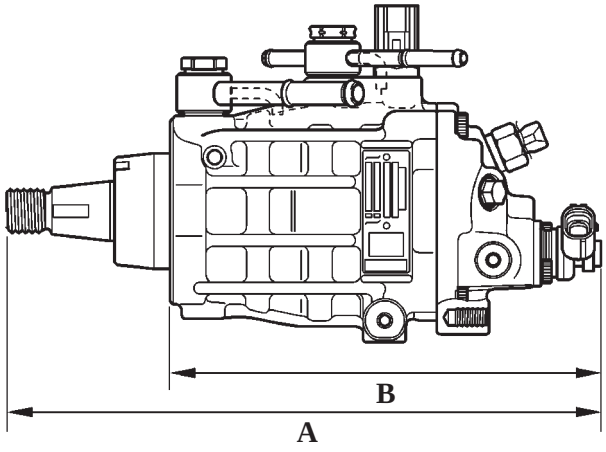

HP2 Type (Previous Model)

▶ Specification ◀

Model			New	Previous
Type			HP3 (Outer Cam)	HP2 (Inner Cam)
A	Length	mm (in.)	201.5 (7.93)	252.0 (9.92)
B	Length	mm (in.)	140.3 (5.52)	182.1 (7.17)
Suction Control Valve			1	2
Pump Body			ø8.5 x 2	ø7.0 x 4
Weight		g (lb.)	3800 (8.38)	6040 (13.32)

2) Construction

- The supply pump consists of an eccentric camshaft, ring cam, two plungers, four check valves, SCV, fuel temperature sensor, and a feed pump.
- The 2 plungers are placed opposite each other outside of the ring cam.

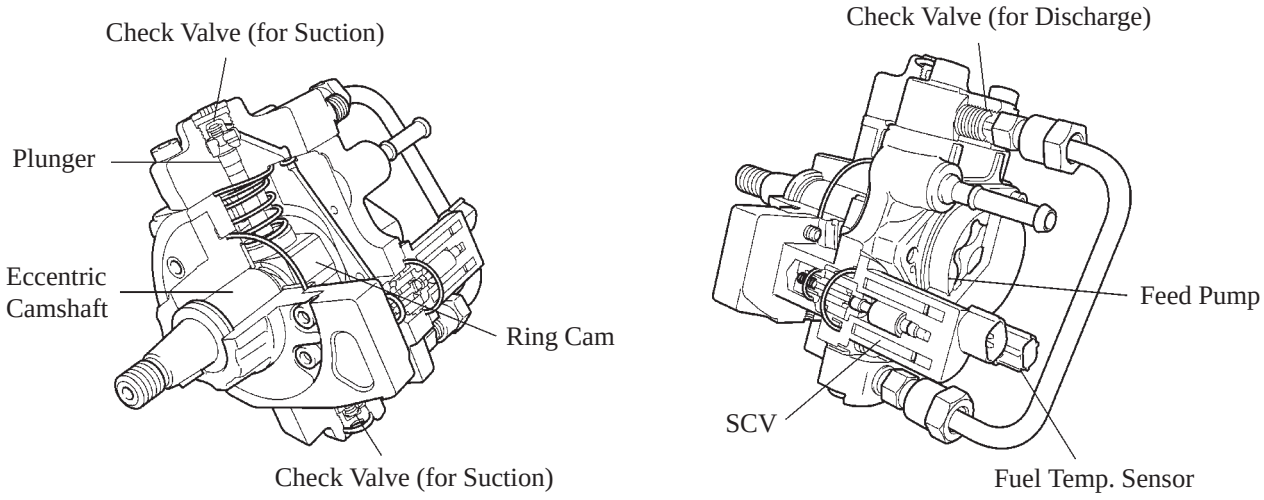

240EG83

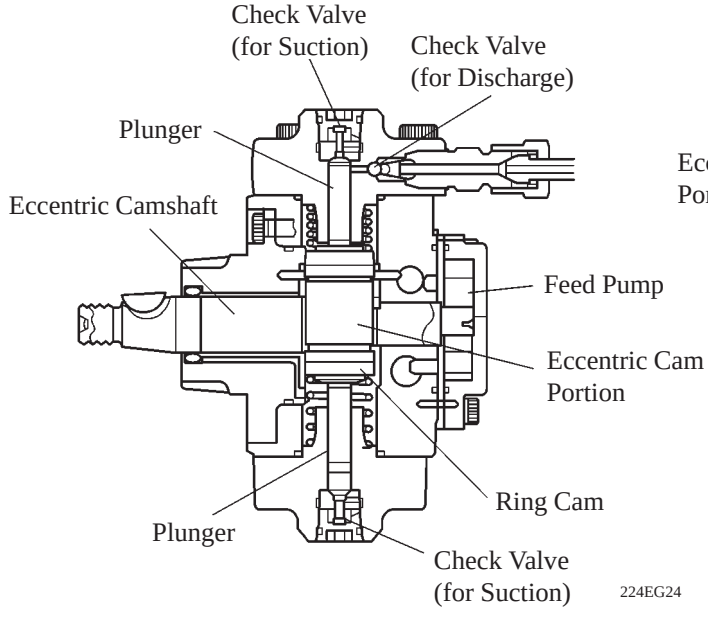

224EG24

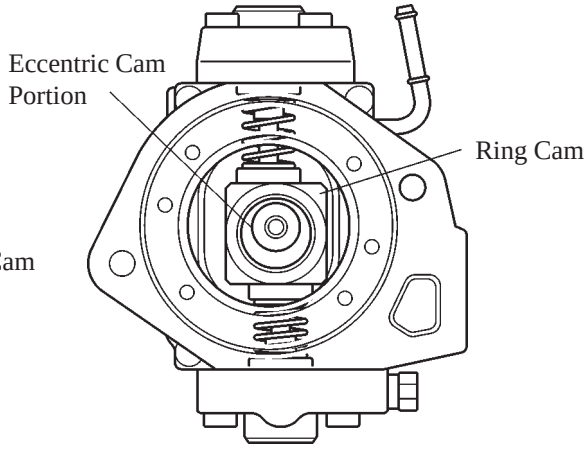

224EG23

3) Operation

Due to the rotation of the eccentric cam, the ring cam pushes plunger A upward as illustrated below. The force of the spring pulls plunger B (which is located opposite plunger A) upward. As a result, plunger B draws fuel in, and plunger A pumps fuel at the same time.

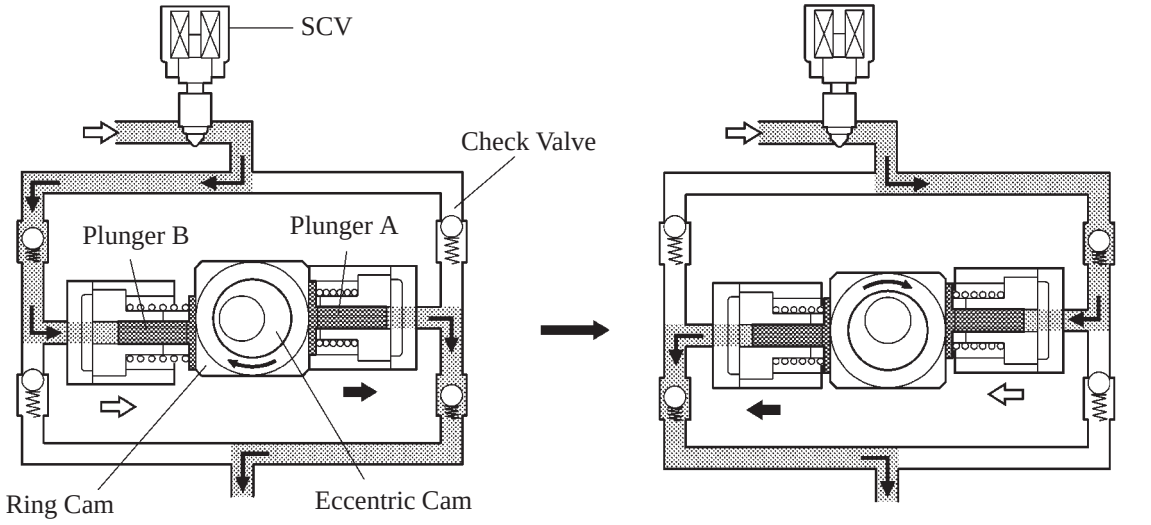

Plunger A: Pumping End
Plunger B: Suction End

240EG48

Plunger A: Suction Start
Plunger B: Pumping Start

240EG49

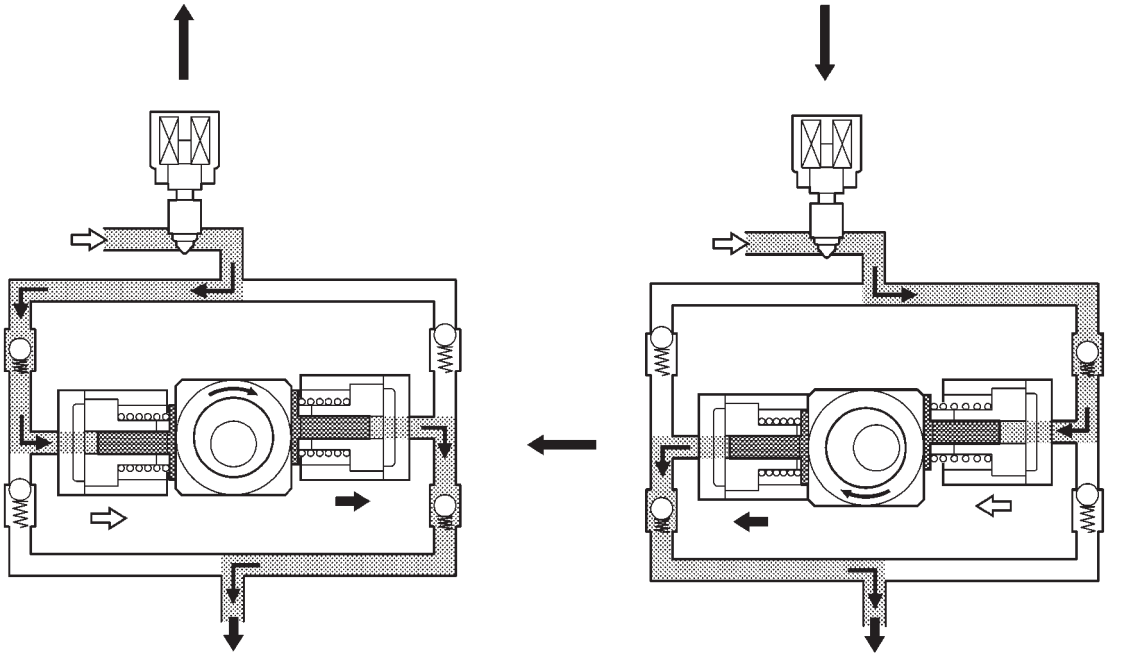

Plunger A: Pumping Start
Plunger B: Suction Start

240EG51

Plunger A: Suction End
Plunger B: Pumping End

240EG50

3. Common-Rail

The function of the common-rail is to store the fuel that has been pressurized by the supply pump. The common-rail is equipped with a fuel pressure sensor, which detects the fuel pressure in the common-rail, and a pressure discharge valve, which regulates the fuel pressure.

- Internally, the common-rail contains a main rail hole and five branch holes that intersect the main rail hole. Each branch hole, which has a diameter of 1 mm (0.04 in.), functions as an orifice that dampens the fluctuation of the fuel pressure.
- In the pressure discharge valve, the plunger opens and closes in accordance with the actuation signals from the EDU. Thus, it regulates pressure by releasing excess pressure from the common-rail. In addition, it has a pressure reduction function in case of emergency.
- For details on the fuel pressure sensor, see page EG-172.

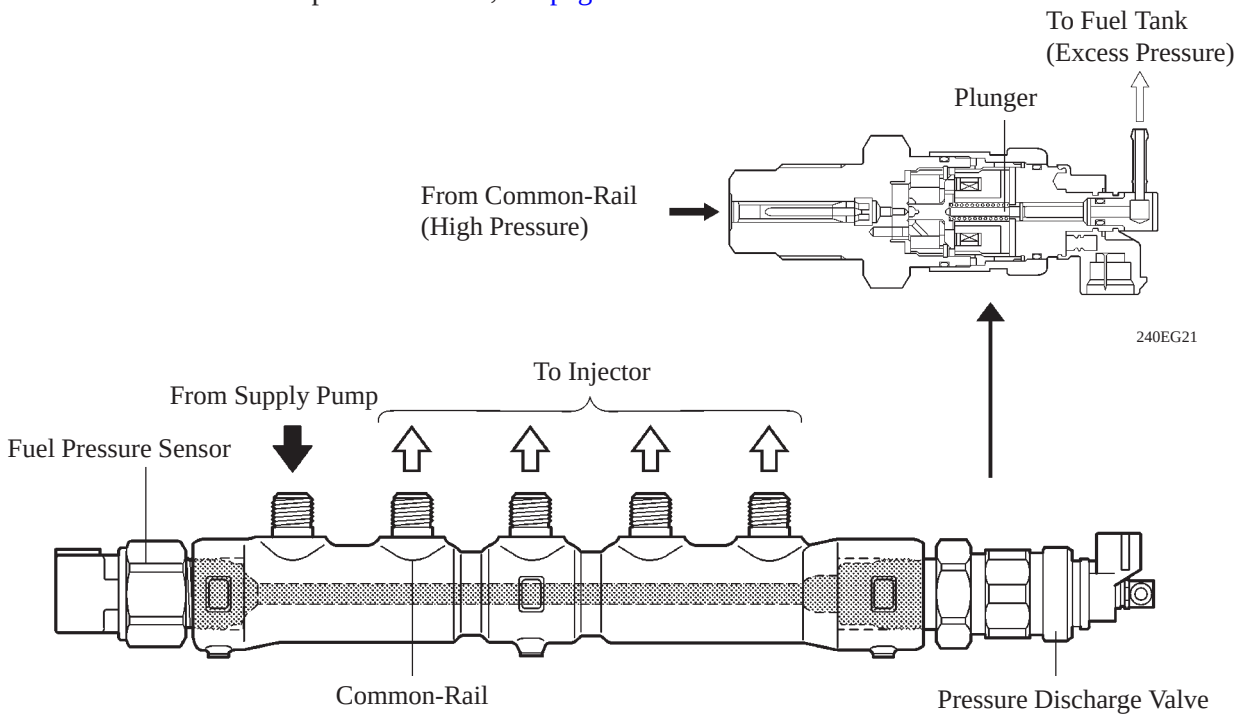

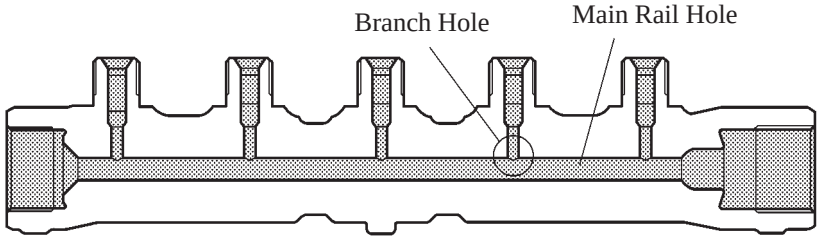

Service Tip

- Fuel pressure sensor has its sealing portion plastic-deformed in order to keep sealing performance, so do not reuse it after disassembling.
- If parts that affect the alignment has been changed, make sure to replace the pipe with a new one as well. The parts that require the replacement of a pipe are listed below.
  Injection Pipe: Injector, Common-Rail, Cylinder Head
  Fuel Inlet Pipe: Supply Pump, Common-Rail, Cylinder Block, Water Pump, Cylinder Head

For details, refer to the Avensis Repair Manual (Pub. No. RM1018E).

4. Injector

General

- An injector consists of a nozzle needle, piston, and solenoid valve.
- An injector compensation value and QR (Quick Response) code containing encoded characteristics of the injector are printed on each injector.
- The injector compensation value and QR code contain various pieces of information regarding the injector, such as model code, injection volume correction, and injection timing correction values.

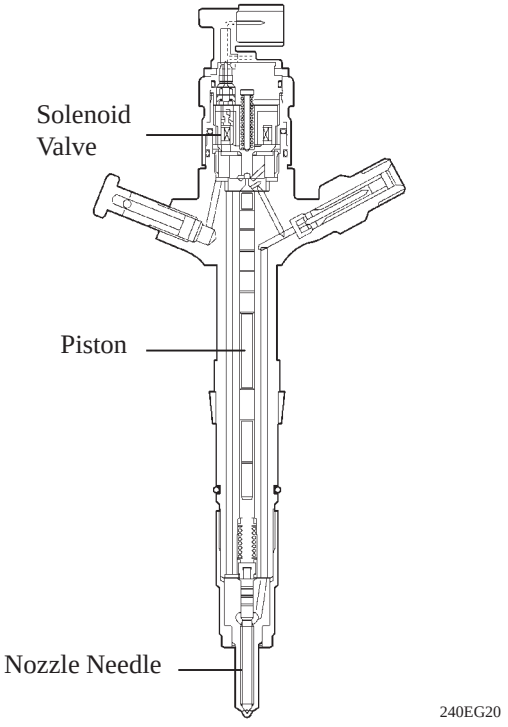

Service Tip

- If an injector or the engine ECU is replaced, the injector compensation value can be entered in the engine ECU via a hand-held tester. Then, the proper compensation will be made so that the injection volume precision prior to the replacement will remain unchanged. For details, see the Avensis Repair Manual (Pub. No. RM1018E).
- The QR code, which requires a special scan tool, is not used at TOYOTA dealers.

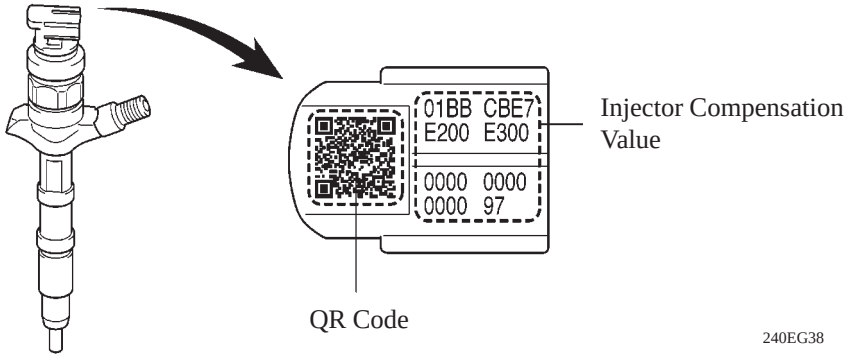

— Reference —

What is QR (Quick Response) Code?

- QR code, a matrix symbology consisting of an array of nominally square cells, allows omni-directional, high-speed reading of large amounts of data.
- QR code encodes may types of date such as numeric, alphanumeric, kanji, kana and binary code. A maximum of 7,089 characters (numeric) can be encoded.
- QR code (2D code) contains information in the vertical and horizontal direction, whereas a bar code contains date in one direction only. QR code (2D code) holds a considerably greater volume of information than a bar code.

Operation

(a) When electrical current is applied to the solenoid coil, it pulls the solenoid valve up.

(b) The orifice of the control chamber opens, allowing the fuel to flow out.

(c) The fuel pressure in the control chamber drops.

(d) Simultaneously, fuel flows from the orifice to the bottom of the piston and raises the piston up (to enhance response).

(e) As a result, the piston raises the nozzle needle to inject fuel.

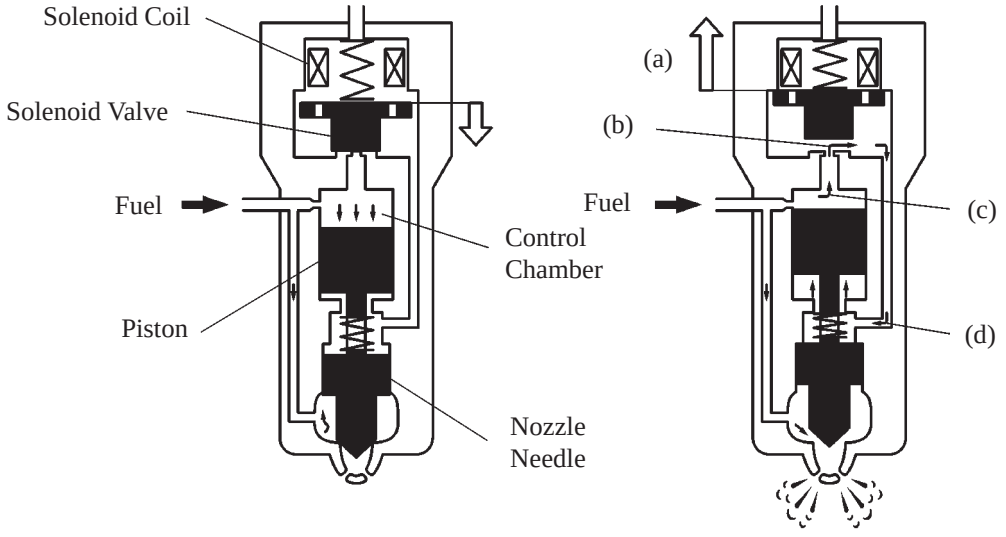

201EG36

■CHARGING SYSTEM

1. General

- Segment Conductor type alternator has been adopted.
- A one-way clutch function has been provided in the alternator pulley.
- V-ribbed belt has been adopted to alternator drive belt, and automatic tensioner has been adopted to belt tensioner.

2. Alternator

General

- A compact and lightweight Segment Conductor type alternator that generates high voltage output in a highly efficient manner has been adopted.
- A one-way clutch function has been provided in the alternator pulley to absorb the fluctuations in the engine speed, thus significantly reducing the damage sustained by the drive belt.

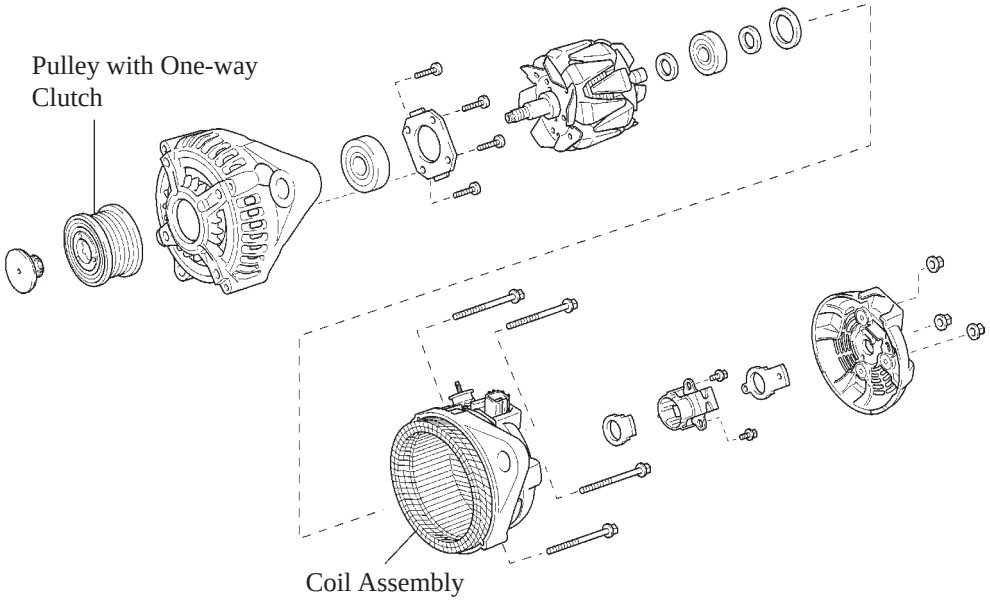

240EG131

Service Tip

- SST (09820-63020) has been newly established due to the adoption of a pulley with the one-way clutch function.
- Although the charging circuit of a conventional alternator is checked through the F terminal, this check cannot be performed on the Segment Conductor type alternator through the use of the F terminal because the F terminal has been eliminated.

For details, refer to the 1CD-FTV Engine Repair Manual (Pub. No. RM927E).

Construction and Operation

This alternator has adopted a joined segment conductor system, in which multiple segment conductors are welded together to form the stator. Compared to the conventional winding system, the electrical resistance is reduced due to the shape of the segment conductors, and their arrangement helps to make the alternator more compact.

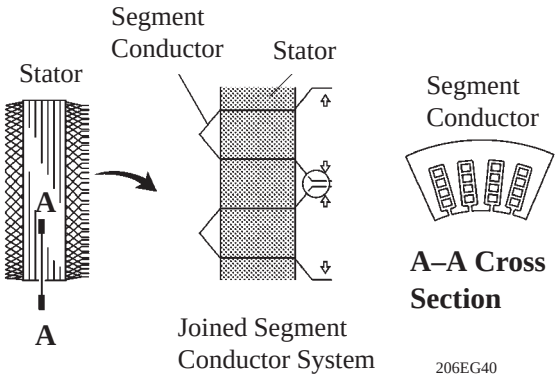

Segment Conductor Alternator

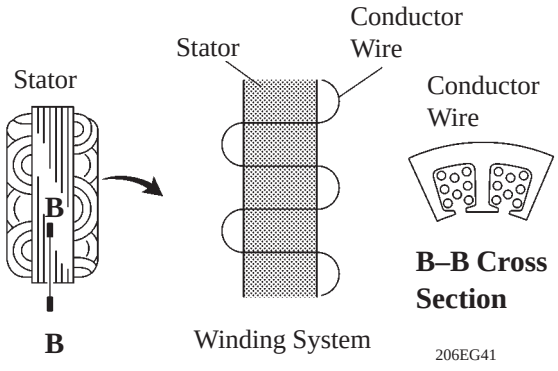

Conventional Type Alternator

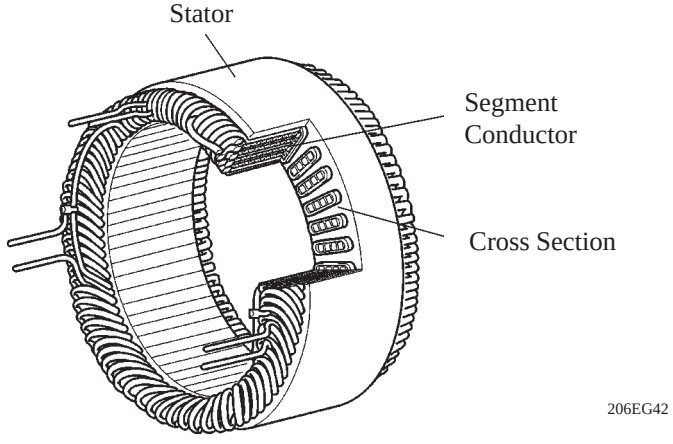

EG

3. Alternator Drive Belt

An automatic tensioner eliminates the need for tension adjustment.

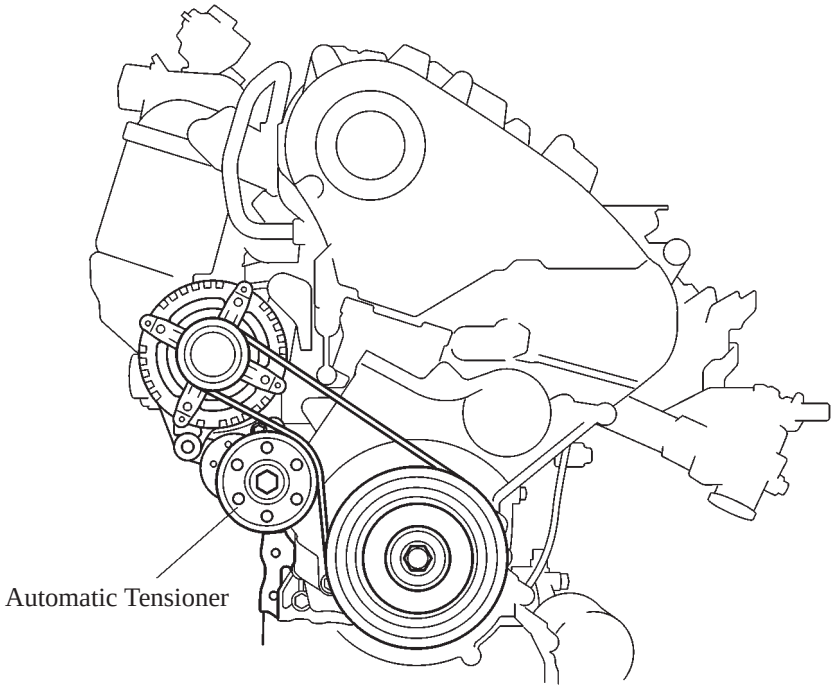

■ENGINE CONTROL SYSTEM

1. General

▶ System Comparison List ◀

System	Outline	New	Previous
Fuel Injection Volume Control (See page EG-171)	Based on the signals received from the sensors, the engine ECU determines the fuel injection volume in accordance with the engine condition.	○	○
Fuel Injection Timing Control (See page EG-171)	Based on the signals received from the sensors, the engine ECU determines the fuel injection timing in accordance with the engine condition.	○	○
Fuel Pressure Control (See page EG-172)	Based on the signals received from the sensors, the engine ECU determines fuel pressure in accordance with engine condition.	—	○
	Based on the signals received from the sensors, the engine ECU determines the fuel pressure via SCV (Suction Control Valve) and pressure discharge valve in accordance with the engine condition.	○	—
Pilot Injection Control (See page EG-175)	Based on the signals received from the sensors, the engine ECU determines pilot injection volume/timing, and interval (between pilot injection and main injection) in accordance with the engine condition.	○	○
Idle Speed Control (See page EG-176)	The engine ECU determines the idle speed in accordance with the engine condition, and controls the fuel injection volume in order to maintain the target idle speed.	○	○
Glow Plug Control	Controls the length of time when the current is applied to the glow plugs, in accordance with engine coolant temperature.	○	○
EGR Control (See page EG-176)	Based on the signals received from the sensors, the engine ECU determines the EGR volume via EGR valve and intake restrictor valve in accordance with the engine condition.	○	—
Turbo Pressure Control (See page EG-177)	Based on the signals received from the sensors, the engine ECU controls the actuator via VRV in accordance with the engine condition.	○	—
Intake Restrictor Valve Control	Fully close the intake restrictor valve in order to reduce the vibration when the engine is stopped.	○	○
Air Conditioner Cut-off Control	By controlling the air conditioner compressor ON or OFF in accordance with the engine condition, drivalility is maintained.	○	○
Engine Immobiliser	Prohibits fuel injection if an attempt is made to start the engine with an invalid ignition key.	○	○
Diagnosis (See page EG-178)	When the engine ECU detects a malfunction, the engine ECU diagnoses and memorizes the failed section.	○	○
Fail-Safe (See page EG-178)	When the engine ECU detects a malfunction, the engine ECU stops or controls the engine according to the data already stored in the memory.	○	○

2. Construction

The configuration of the engine control system is as shown in the following chart.

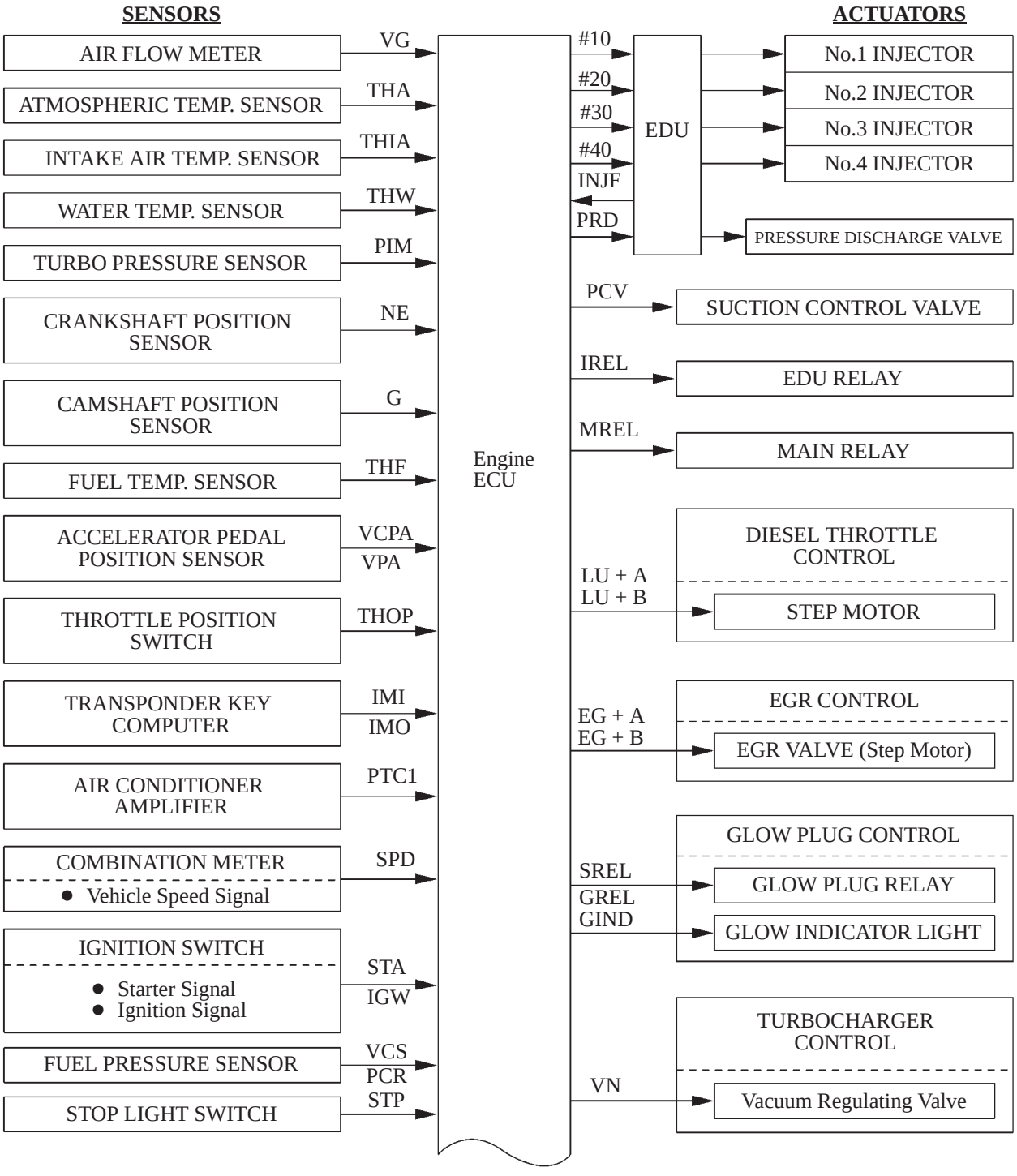

(Continued)

240EG88

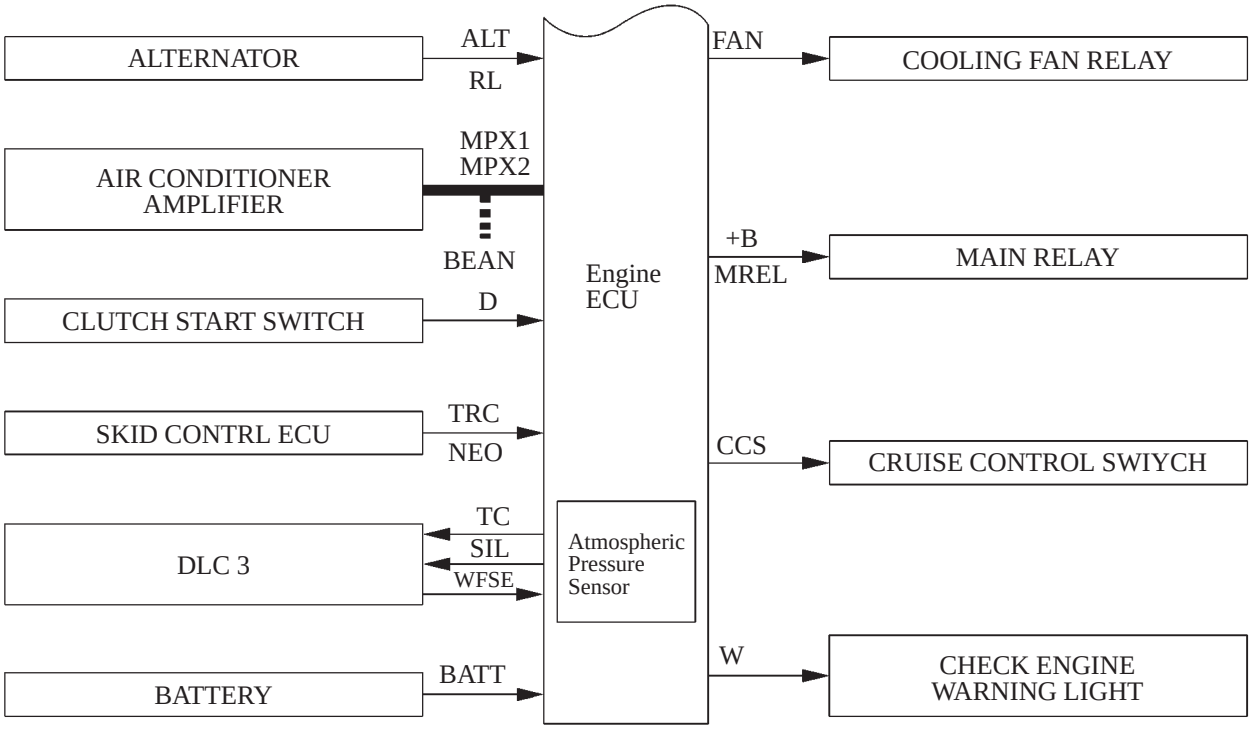
ALTERNATOR
ALT
RL
AIR CONDITIONER AMPLIFIER
MPX1
MPX2
BEAN
CLUTCH START SWITCH
D
SKID CONTRL ECU
TRC
NEO
DLC 3
TC
SIL
WFSE
BATTERY
BATT
Engine ECU
Atmospheric Pressure Sensor
FAN
COOLING FAN RELAY
+B
MREL
MAIN RELAY
CCS
CRUISE CONTROL SWIYCH
W
CHECK ENGINE WARNING LIGHT

240EG89

EG

3. Engine Control System Diagram

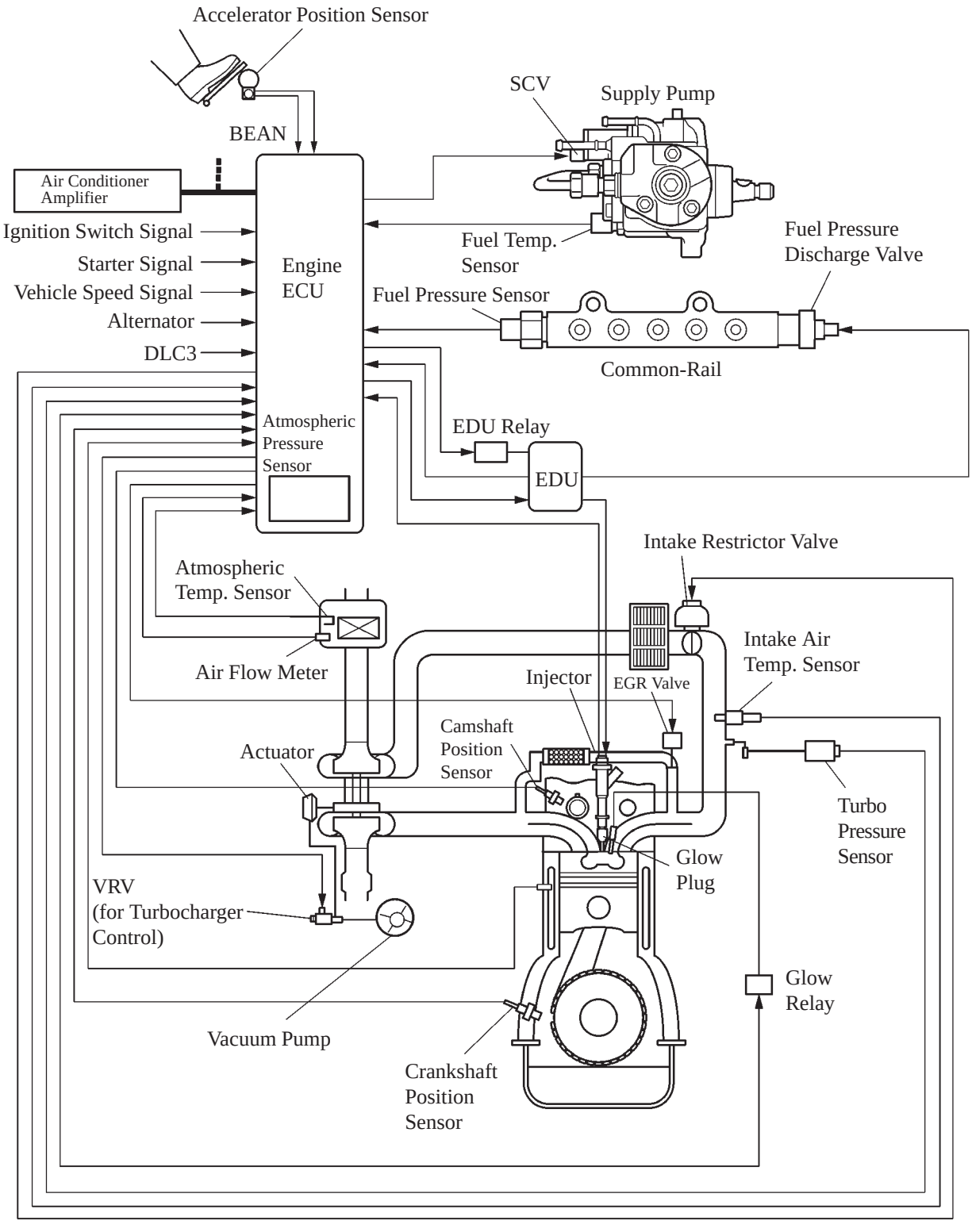

240EG40

4. Layout of Main Component

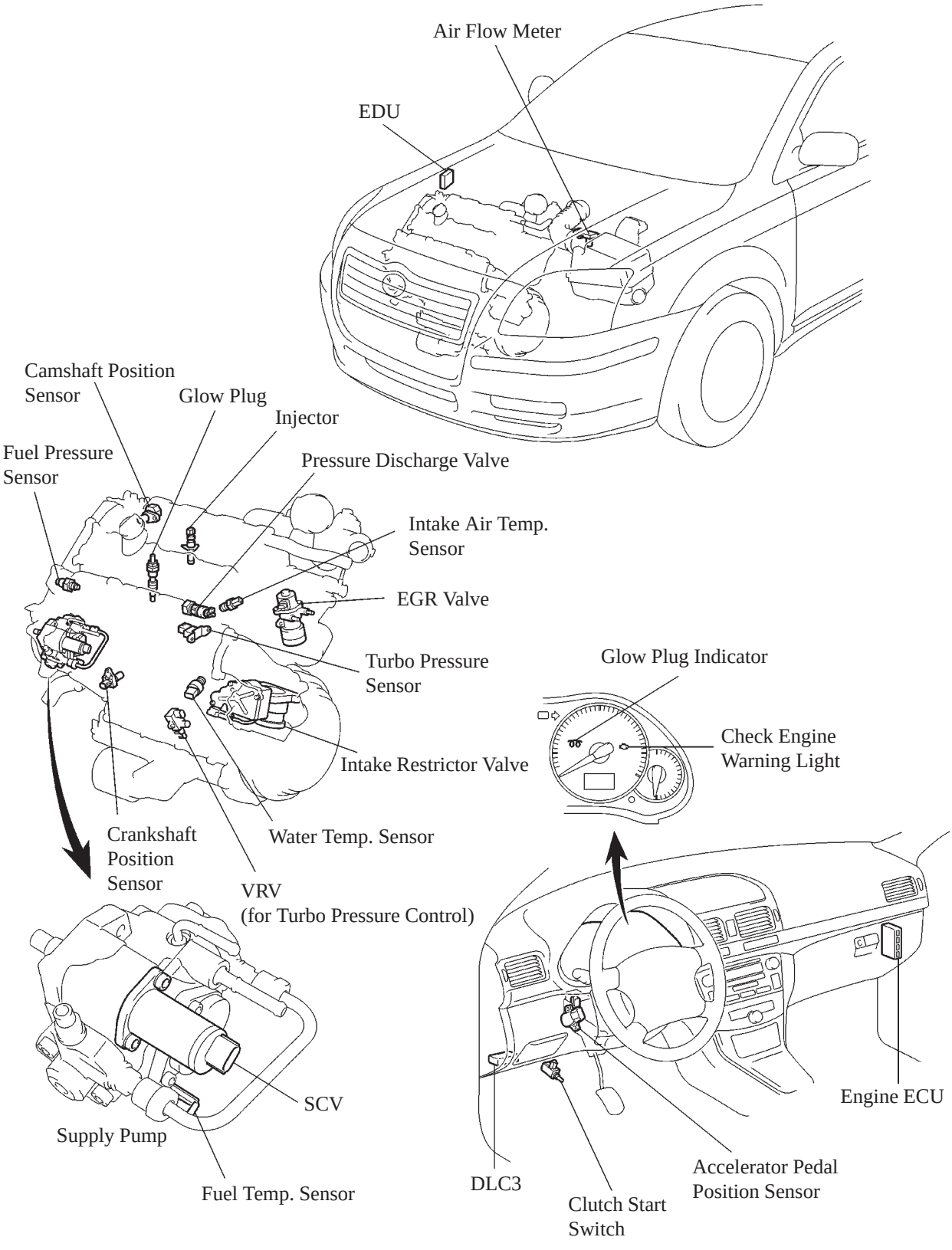

240EG26

EG

5. Main Component of Engine Control System

General

The main components of the 1CD-FTV engine control system are as follows:

: Change

Components	Outline	Quantity
Engine ECU	32-bit	1
Air Flow Meter	Hot- wire Type	1
Crankshaft Position Sensor (Rotor Teeth)	Pick-up Coil Type (36-2)	1
Camshaft Position Sensor (Rotor Teeth)	Pick-up Coil Type (1)	1
Accelerator Pedal Position Sensor	Linear Type	2 (Main, Sub)
Fuel Pressure Sensor	Semiconductor Strain Gauge Type (Two Circuits)	1
EDU	DC/DC Converter	1

Engine ECU

The 32-bit CPU of the engine ECU has been changed from the 16-bit CPU to increase the speed for processing the signals.

Crankshaft Position Sensor

The timing rotor of the crankshaft consists of 34 teeth, with 2 teeth missing. The crankshaft position sensor outputs the crankshaft rotation signals every 10°, and the missing teeth are used to determine the top-deadcenter.

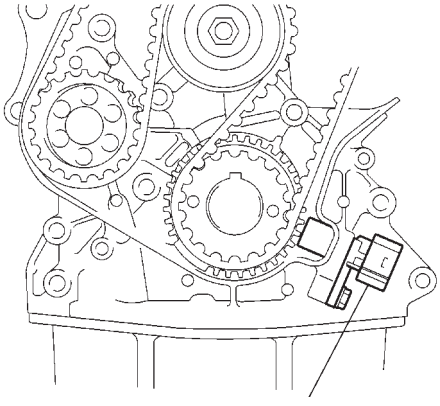

Crankshaft Position Sensor

206EG38

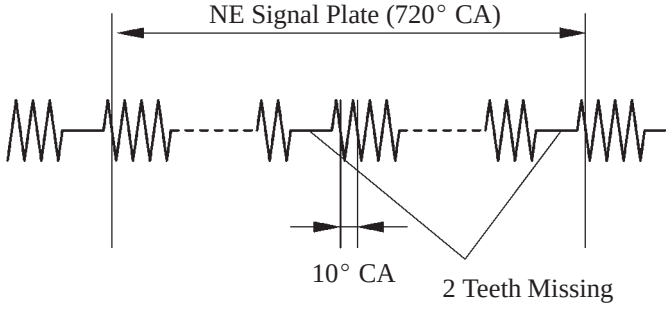

240EG90

Camshaft Position Sensor

To detect the camshaft position, a protrusion that is provided on the timing pulley is used to generate 1 pulse for every 2 revolution of the crankshaft.

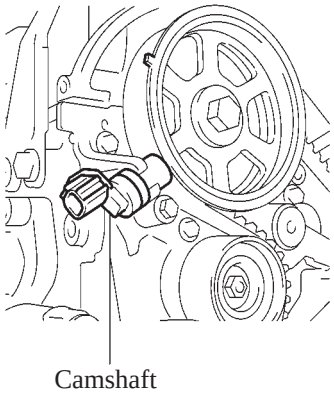

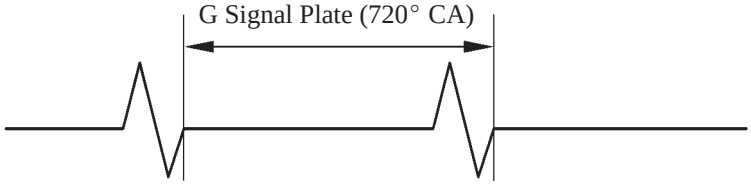

201EG42

Accelerator Pedal Position Sensor

- A return bracket has been provided on the accelerator pedal position sensor, and in order to forcefully return the sensor lever to the fully closed position, the accelerator pedal switch has been discontinued.
- This sensor converts the accelerator pedal depressed angles into electric signals with two differing characteristics and outputs them to the engine ECU. One is the VPA1 signal that linearly outputs the voltage along the entire range of the accelerator pedal depressed angle. The other is the VPA2 signal that outputs on offset voltage.

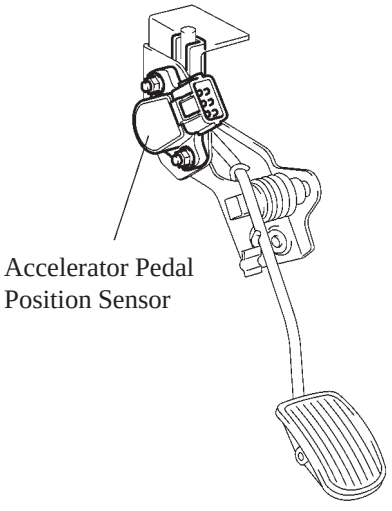

206EG37

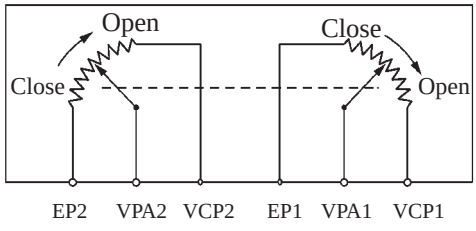

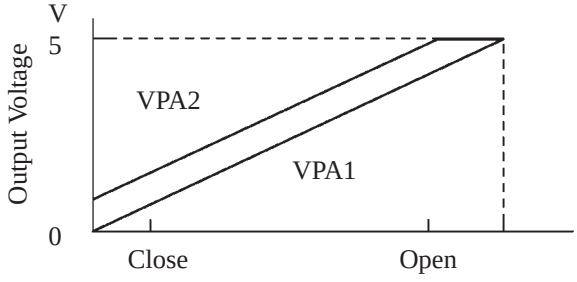

199EG40

Fuel Pressure Sensor

- The fuel pressure sensor, which is mounted on the common-rail, outputs a signal that represents the fuel pressure in the common-rail to the engine ECU in order to constantly regulate the fuel at an optimal pressure.
- The fuel pressure sensor contains two circuits (main and sub), which enable the engine ECU to constantly compare the values detected by the two circuits. As a result, highly precise values can be detected, which also enable a higher level of failsafe control.

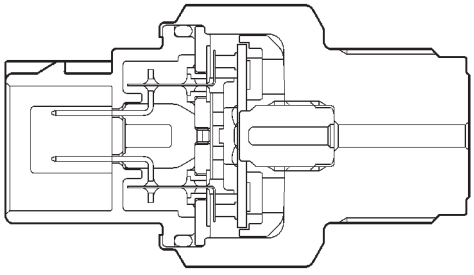

240EG91

6. Fuel Injection Volume Control

Fuel injection volume is controlled as shown below.

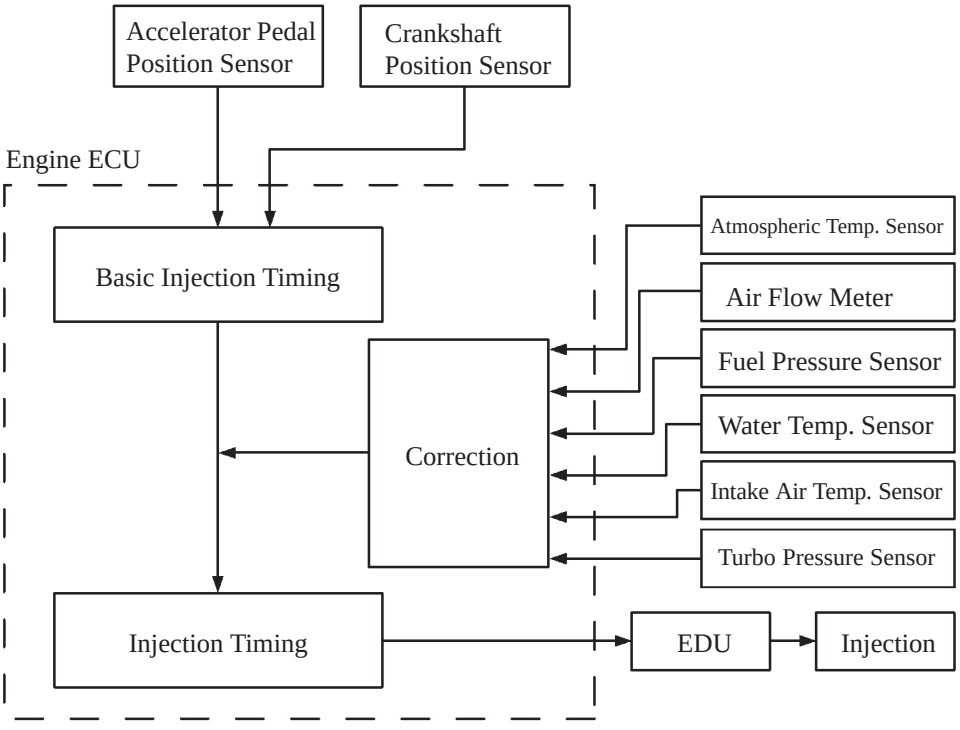

201EG44

7. Fuel Injection Timing Control

Fuel injection timing is controlled as shown below.

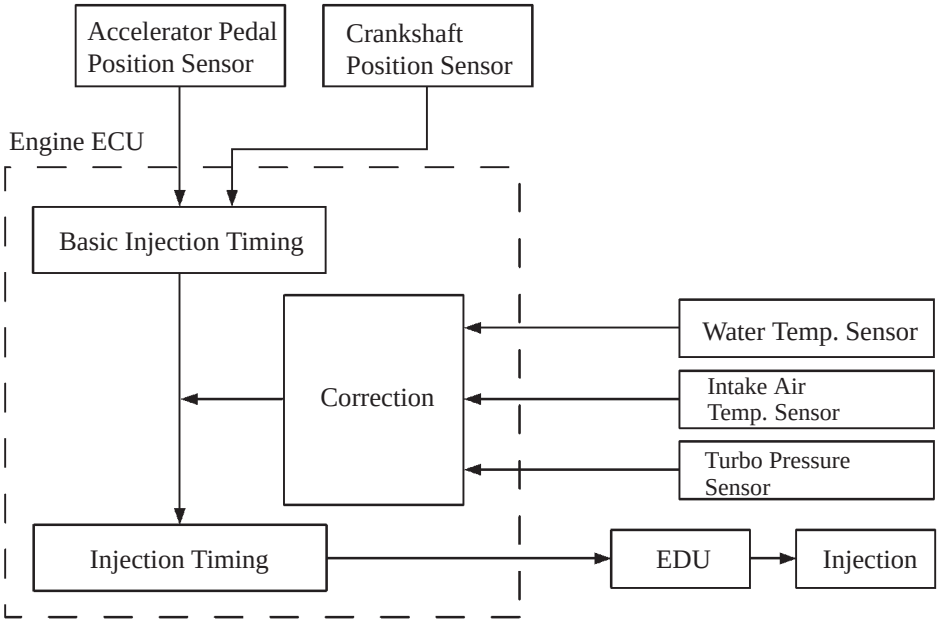

201EG45

8. Fuel Pressure Control

General

Engine ECU calculates the target injection pressure (30 – 135 MPa) based on the engine conditions, that are the signals from the accelerator pedal position sensor and the crankshaft position sensor.
To control fuel pressure, signals sent to SCV (Suction Control Valve) of the supply pump regulate the pumping volume and signals sent to pressure discharge valve of the common-rail regulate the discharge volume, so that the pressure detected by the fuel pressure sensor matches the target injection pressure.

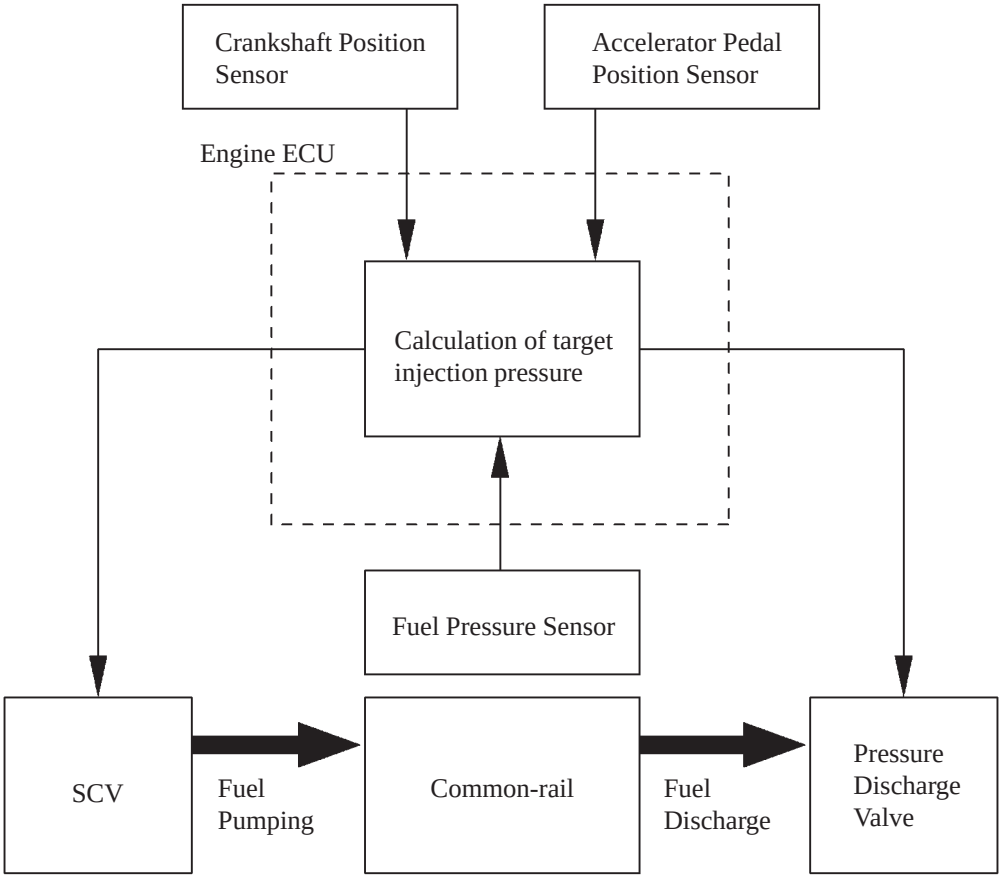

224EG52

System Operation

1) Fuel Pumping

The engine ECU controls the opening of the SCV in order to regulate the volume of fuel that is pumped by the supply pump to the common-rail. Consequently, the fuel pressure in the common-rail is controlled to the target injection pressure.

▶ SCV Opening Small ◀

(a) When the opening of the SCV is small, the fuel suction area is kept small, which decrease the transferable fuel quantity.

(b) The plunger strokes fully, however, the suction volume becomes small due to the small suction area. Therefore, the difference of the volume between the geometry volume and the suction volume is in vacuum condition.

(c) Pumping will start at the time when the fuel pressure has become higher than the common-rail pressure.

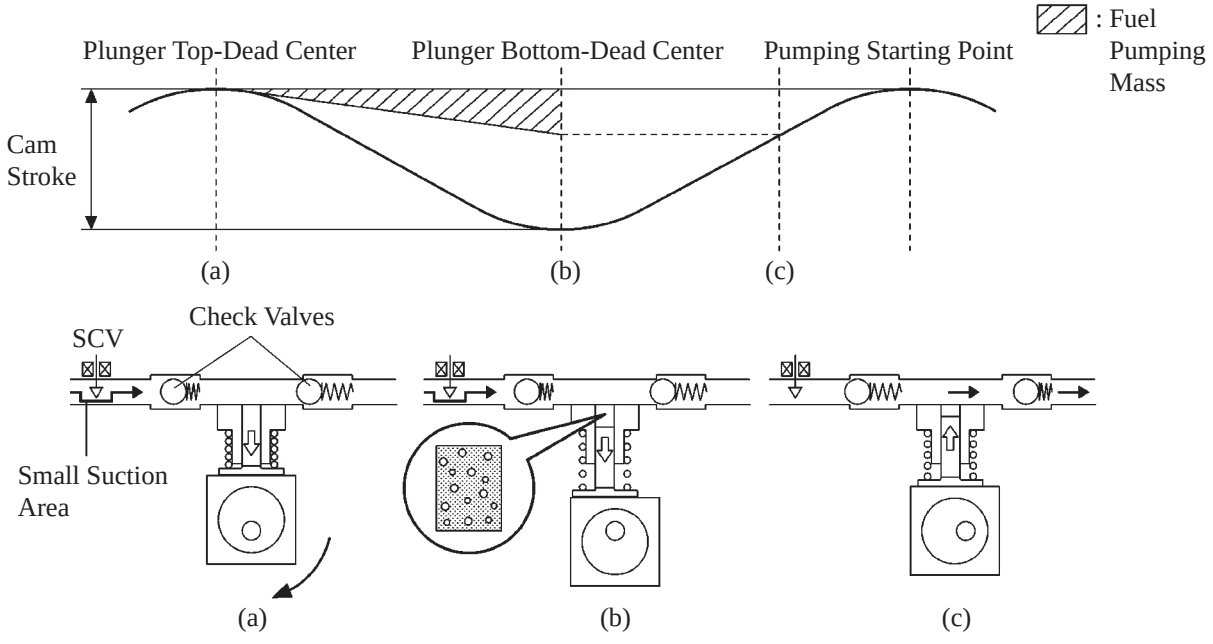

224EG53

▶ SCV Opening Large ◀

(a) When the opening of the SCV is large, the fuel suction area is kept large, which increase the transferable fuel quantity.

(b) The plunger strokes fully, the suction volume will increase because the suction area is large.

(c) Pumping will start at the time when the fuel pressure has become higher than the common-rail pressure.

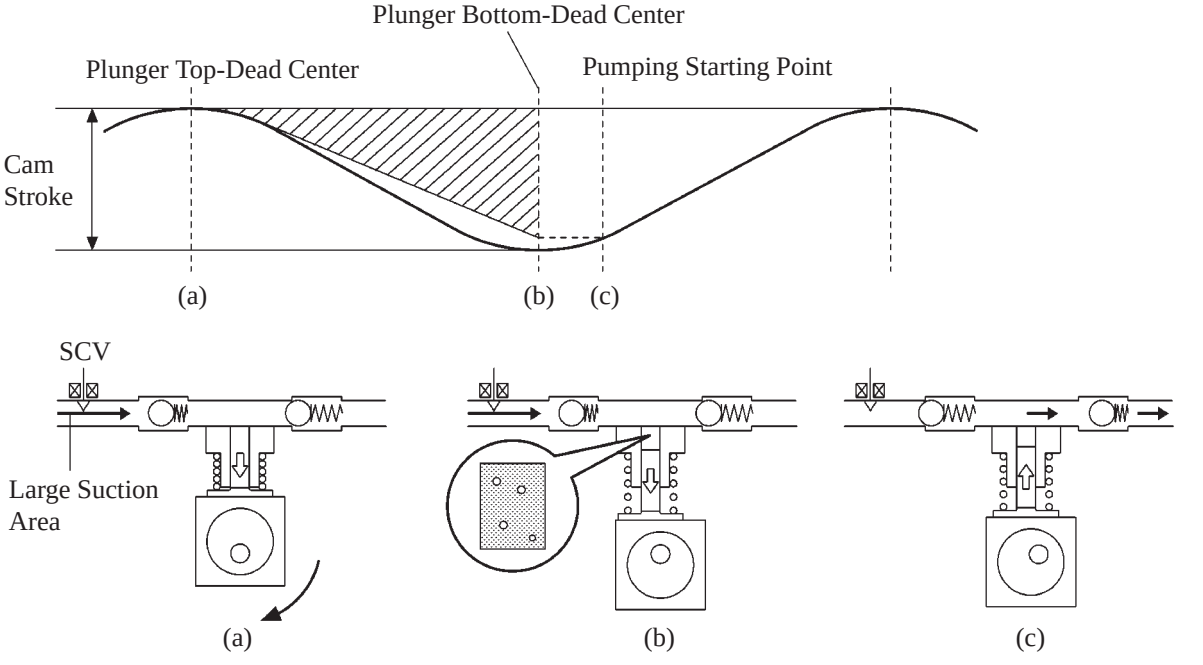

2) Fuel Discharge

When the fuel pressure in the common-rail becomes higher than the target injection pressure, the engine ECU discharges the fuel by the way of the pressure discharge valve in order to control the fuel pressure to the target injection pressure.

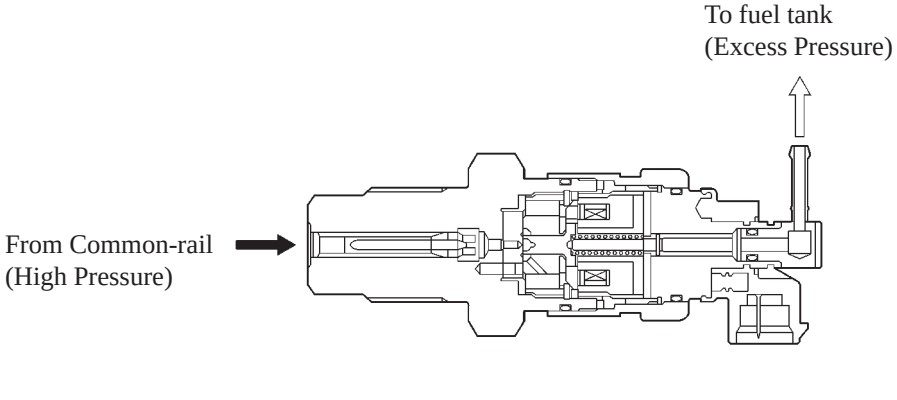

9. Pilot Injection Control

- Pilot injection is method that provides an auxiliary fuel injection before the main fuel injection takes place. The purpose of pilot injection is to gently start the combustion of the fuel of the main injection in order to reduce combustion and noise.

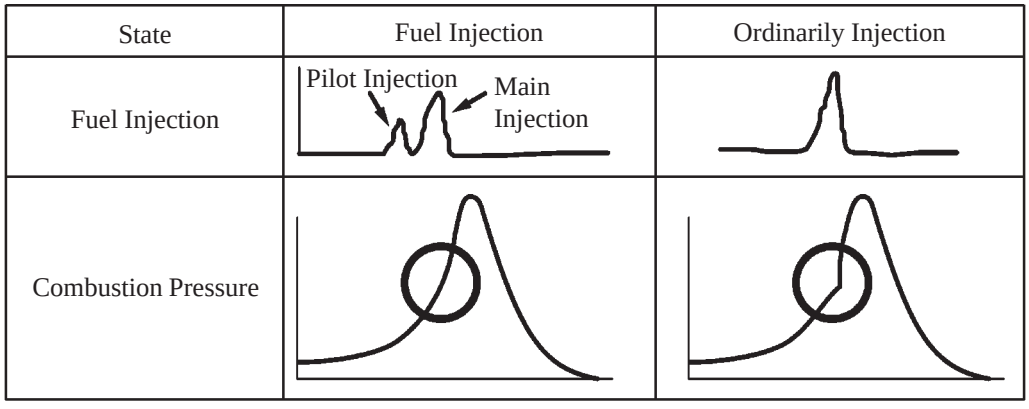

240EG125

- During pilot injection, the pilot injection volume, timing, and interval (between pilot injection and main injection) are controlled as shown below.

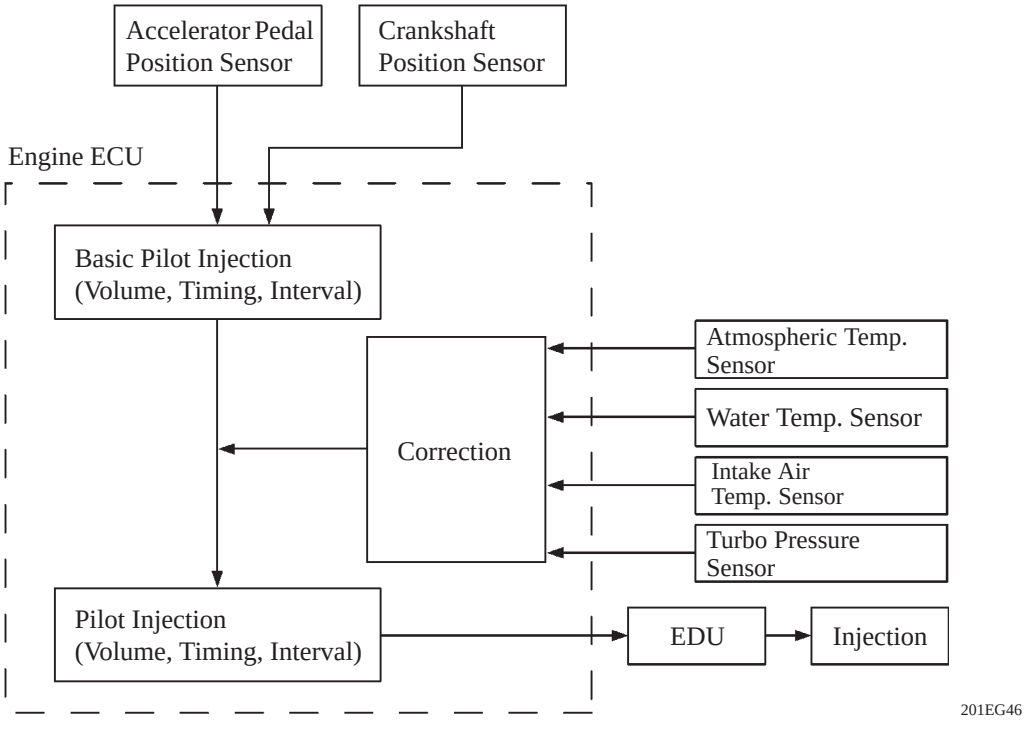

201EG46

EG

10. Idle Speed Control

- In this system, the engine ECU calculates the target engine speed in accordance with the engine condition, and determines the fuel injection volume, thus controlling the idle speed rpm.
- During cold operation, the idle is increased by turning ON the idle up switch, thus improving the heating performance of the heater.

11. EGR Control

By sensing the engine driving conditions, the control unit electrically operates EGR valve and throttle opening position with step motor and the amount of recirculating exhaust gas is regulated.

— Change (from Previous Model) —

The VRV (Vacuum Regulating Valve) for EGR and the VSV (for cutoff) have been discontinued.

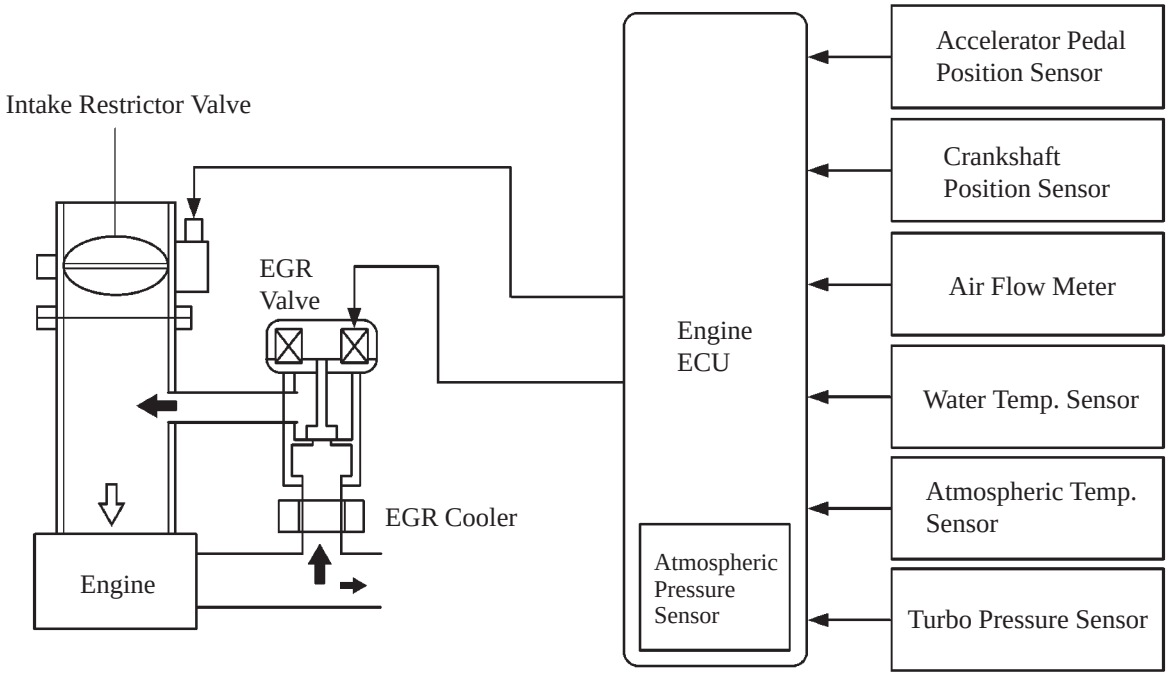

201EG137

12. Turbo Pressure Control

- The turbo pressure (intake manifold pressure) is controlled by the variable nozzle vane located in the turbine area. This nozzle is actuated by the actuator that is directly connected to it. This actuator is actuated by the vacuum pressure that has been regulated by the VRV (Vacuum Regulating Valve) in accordance with the signals from the engine ECU.
- The engine ECU calculates an optimal turbo pressure in accordance with the driving conditions (engine speed, injection volume, atmospheric pressure, and water temperature). It controls the variable nozzle so that the turbo pressure detected by the turbo pressure sensor matches the calculated turbo pressure.

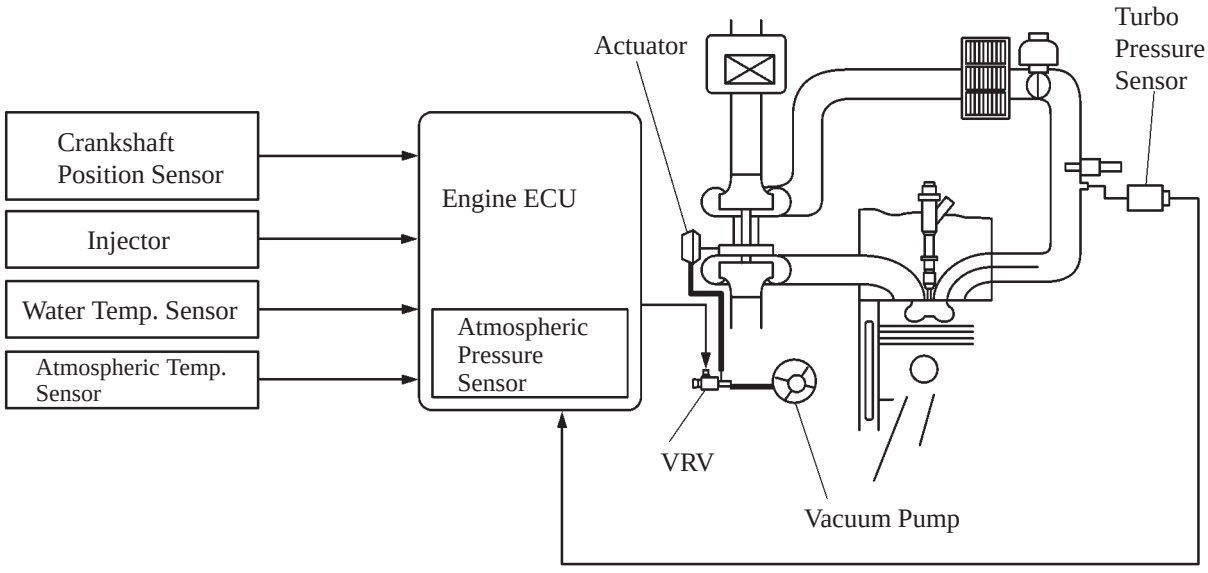

240EG132

13. Diagnosis

- The diagnosis system of the 1CD-FTV engine uses the EURO-OBD (Europe On-Board Diagnosis) that complies with European regulations.
- When the Engine ECU detects a malfunction, the Engine ECU makes a diagnosis and memorizes the failed section. Furthermore, the check engine warning light in the combination meter illuminates to inform the driver.
- At the same time, the DTCs (Diagnostic Trouble Codes) are stored in memory. The DTCs can be read by connecting a hand-held tester.
- The DTCs have been further divided to correspond to SAE codes.
- For details, see the Avensis Repair Manual Supplement (Pub. No. RM1018E).

14. Fail-Safe

When the Engine ECU detects a malfunction, the Engine ECU stops or controls the engine according to the data already stored in the memory as the following condition.

▶ Fail-Safe Control List ◀

DTC	Fail-safe Operation	Fail-safe Deactivation Conditions
P0087	VTA is fixed at 10 %.	IG OFF
P0088	VTA is fixed at 10 %.	IG OFF
P0093	After fail safe driving control is performed for 1 minute, engine stalls.	IG OFF
P0095, P0097, P0098	Intake air temperature is fixed at 150°C (302°F)	Returned to normal condition
P0105, P0107, P0108	Turbo pressure is set at fixed value.	Returned to normal condition
P0115, P0117, P0118	When fuel temp. sensor operates normal and intake air temp. is less than 15°C (59°F), value of fuel temp. sensor is substitued. When fuel temp. sensor operates normal and intake air temp. is more than 20°C (68°F), value is fixed at 110°C (230°F). When the fuel temp. sensor is abnormal, value is fixed at 40°C (104°F).	Returned to normal condition
P0168	Out put limit	Returned to normal condition
P0180, P0182, P0183	Fuel temperature is fixed at 40°C (104.0°F).	Returned to normal condition
P0190, P0191, P0192, P0193	VTA is fixed at 10 %.	IG OFF
P0200	VTA is fixed at 25 %.	IG OFF
P0335	Out put limit	Returned to normal condition
P0488	VTA is fixed at 25 %.	IG OFF
P0500	Vehicle speed is fixed at 0 km/h (0 mph).	Vehicle speed ≧ 10 km/h (6mph)
P1229	VTA is fixed at 10 %.	IG OFF
P1271	VTA is fixed at 25 %.	IG OFF
P1272	VTA is fixed at 25 %.	IG OFF
P2120, P2122, P2123, P2125, P2127, P2128, P2138	Out put limit	+ B OFF

EXTERIOR APPEARANCE

4-Door Sedan



240MO01



240MO02

5-Door Liftback



240MO03



240MO04

5-Door Wagon



240MO05



240MO06

MODEL CODE

ZZT250	L	–	A	E	M	N	K	W
1	2		3	4	5	6	7	8

MO

	BASIC MODEL CODE
1	ZZT250 : With 3ZZ-FE Engine ZZT251 : With 1ZZ-FE Engine AZT250 : With 1AZ-FSE Engine : With 1AZ-FE Engine CDT250: With 1CD-FTV Engine

	STEERING WHEEL POSITION
2	L : Left-Hand Drive R : Right-Hand Drive

	MODEL NAME
3	A : AVENSIS

	BODY TYPE
4	E : 4-Door Sedan L : 5-Door Liftback W : 5-Door Wagon

	GEAR SHIFT TYPE
5	M : 5-Speed Manual, Floor P : 4-Speed Automatic, Floor

	GRADE
6	N : ENTRY E : MID TECHNICAL G : MID ELEGANT

	ENGINE SPECIFICATION
7	H : DOHC EFI and Direct Injiection K : Compact DOHC and EFI Y : Common-Rail Diesel

	DESTINATION
8	W : Europe Blank : General Countries

MODEL LINE-UP

EUROPE

ENGINE	BODY TYPE	GRADE	TRANSAXLE			
			5-Speed Manual			
			C50	C250	E354	E357
3ZZ-FE	Sedan	ENTRY	ZZT250L(R)-AEMNKW	—	—	—
		MID TECHNICAL	ZZT250L-AEMEKW	—	—	—
		MID ELEGANT	ZZT250L-AEMGKW	—	—	—
	Liftback	ENTRY	ZZT250L(R)-ALMNKW	—	—	—
	Wagon	ENTRY	ZZT250L-AWMNKW	—	—	—
1ZZ-FE	Sedan	ENTRY	—	ZZT251L(R)-AEMNKW	—	—
		MID TECHNICAL	—	ZZT251L(R)-AEMEKW	—	—
		MID ELEGANT	—	ZZT251L(R)-AEMGKW	—	—
	Liftback	ENTRY	—	ZZT251L(R)-ALMNKW	—	—
		MID TECHNICAL	—	ZZT251L(R)-ALMEKW	—	—
		MID ELEGANT	—	ZZT251L(R)-ALMGKW	—	—
	Wagon	ENTRY	—	ZZT251L(R)-AWMNKW	—	—
		MID TECHNICAL	—	ZZT251L(R)-AWMEKW	—	—
		MID ELEGANT	—	ZZT251L(R)-AWMGKW	—	—
1AZ-FE (Unleaded)	Sedan	MID TECHNICAL	—	—	AZT250L-AEMEKW	—
		MID ELEGANT	—	—	AZT250L-AEMGKW	—
1AZ-FSE	Sedan	MID TECHNICAL	—	—	AZT250L(R)-AEMEHW	—
		MID ELEGANT	—	—	AZT250L(R)-AEMGHW	—
	Liftback	MID TECHNICAL	—	—	AZT250L(R)-ALMEHW	—
		MID ELEGANT	—	—	AZT250L(R)-ALMGHW	—
	Wagon	MID TECHNICAL	—	—	AZT250L(R)-AWMEHW	—
		MID ELEGANT	—	—	AZT250L(R)-AWMGHW	—
1CD-FTV	Sedan	ENTRY	—	—	—	CDT250L(R)-AEMNYW
		MID TECHNICAL	—	—	—	CDT250L(R)-AEMEYW
		MID ELEGANT	—	—	—	CDT250L(R)-AEMGYW
	Liftback	ENTRY	—	—	—	CDT250L(R)-ALMNYW
		MID TECHNICAL	—	—	—	CDT250L(R)-ALMEYW
		MID ELEGANT	—	—	—	CDT250L(R)-ALMGYW
	Wagon	ENTRY	—	—	—	CDT250L(R)-AWMNYW
		MID TECHNICAL	—	—	—	CDT250L-AWMEYW
		MID ELEGANT	—	—	—	CDT250L-AWMGYW

ENGINE	BODY TYPE	GRADE	TRANSAXLE	
			4-Speed Automatic	
			U241E	U341E
1ZZ-FE	Sedan	ENTRY	—	ZZT251L(R)-AEPNKW
		MID TECHNICAL	—	ZZT251L(R)-AEPEKW
		MID ELEGANT	—	ZZT251L(R)-AEPGKW
	Liftback	ENTRY	—	ZZT251L(R)-ALPNKW
		MID TECHNICAL	—	ZZT251L(R)-ALPEKW
		MID ELEGANT	—	ZZT251L(R)-ALPGKW
	Wagon	ENTRY	—	ZZT251L-AWPNKW
		MID TECHNICAL	—	ZZT251L-AWPEKW
		MID ELEGANT	—	ZZT251L-AWPGKW
1AZ-FE (Unleaded)	Sedan	MID TECHNICAL	AZT250L-AEPEKW	—
		MID ELEGANT	AZT250L-AEPGKW	—
	Wagon	MID TECHNICAL	AZT250L-AWPEKW	—
		MID ELEGANT	AZT250L-AWPGKW	—
1AZ-FSE	Sedan	MID TECHNICAL	AZT250L(R)-AEPEHW	—
		MID ELEGANT	AZT250L(R)-AEPGHW	—
	Liftback	MID TECHNICAL	AZT250L(R)-ALPEHW	—
		MID ELEGANT	AZT250L(R)-ALPGHW	—
	Wagon	MID TECHNICAL	AZT250L(R)-AWPEHW	—
		MID ELEGANT	AZT250L(R)-AWPGHW	—

GENERAL COUNTRIES

ENGINE	BODY TYPE	GRADE	TRANSAXLE	
			5-Speed Manual	4-Speed Automatic
			E354	U241E
1AZ-FE (Leaded)	Sedan	ENTRY	AZT250L-AEMNK	AZT250L(R)-AEPNK

EXTERIOR

Front View

- The front view is dynamically expressive, with innovative headlights and a front bumper design that has a sense of stability with upper and lower thickness.
- The headlight low beams feature projectors and have an innovative shape.



Sedan and Liftback Models

240MO07

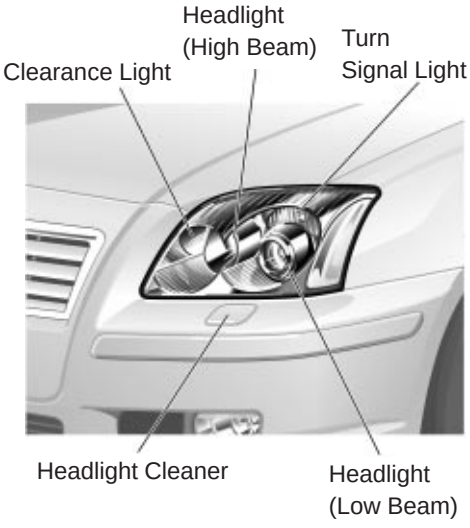

240MO09



Wagon Model

240MO08

Rear View

- The rear combination lens features an elegant, innovative shape.
- The luggage compartment door and back door were given a greater sense of volume for a high-quality feel.

4-Door Sedan



240MO10

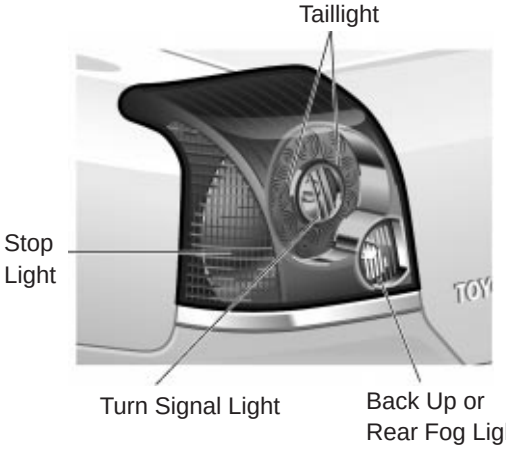

240MO11

5-Door Liftback



240MO12

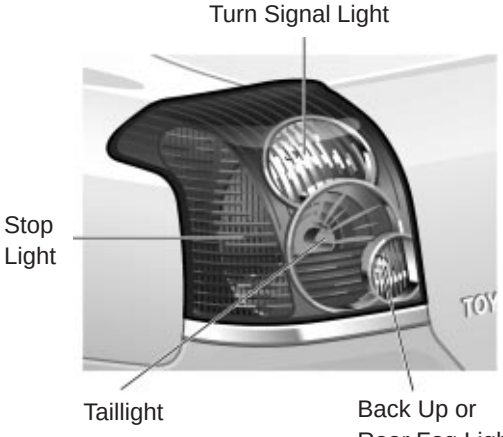

240MO13

5-Door Wagon



240MO14

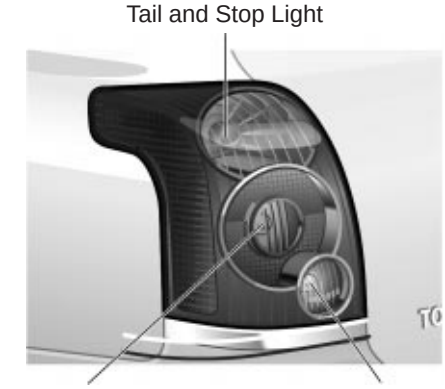

240MO15

Side View

- The side view communicates a sense of balance, with a large cabin structure that expresses a sense of stability and elegance.
- The side view has an elegant and dynamic shape thanks to two character lines.

4-Door Sedan



240MO16

5-Door Liftback



240MO17

5-Door Wagon



240MO18

Tire & Disc Wheel

Tire Size		195/65 R15	205/55 R16	
Disc Wheel	Size	15 x 6 J	16 x 6 1/2 J	16 x 6 1/2 JJ
	Material	Steel	Steel	Aluminum
P. C. D.* [mm] (in.)		100 (3.9)		
Off Set [mm] (in.)		39 (1.5)	45 (1.8)	
Full Cap/Wheel Design		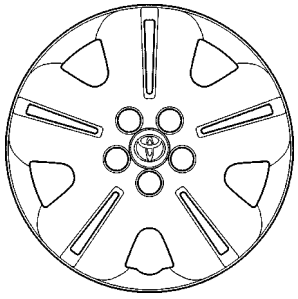 240MO19	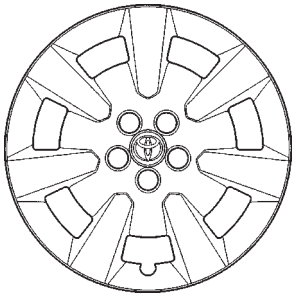 240MO20	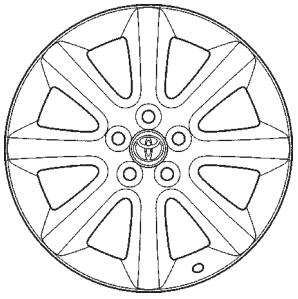 240MO21
Provided				
Engine	1ZZ-FE & 3ZZ-FE	Standard	Option	Option
	1AZ-FSE	—	Standard	Option
	1AZ-FE	Standard	Option	Option
	1CD-FTV	—	Standard	Option

Tire Size		205/55 R16	215/45 R17
Disc Wheel	Size	16 x 6 1/2 JJ	17 x 7 JJ
	Material	Aluminum	
P. C. D.* [mm] (in.)		100 (3.9)	
Off Set [mm] (in.)		45 (1.8)	
Full Cap/Wheel Design		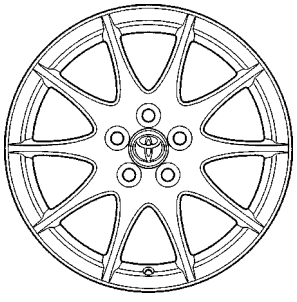 240MO22	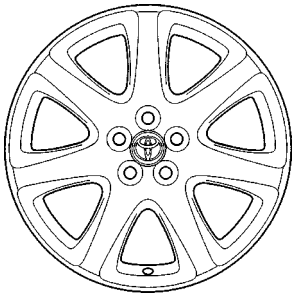 240MO23
Provided			
Engine	1ZZ-FE & 3ZZ-FE	Option	—
	1AZ-FSE	Option	Option
	1AZ-FE	Option	Option (Except General Countries Models)
	1CD-FTV	Option	—

*: Pitch Circle Diameter

INTERIOR



240MO24

Sedan Model



240MO25

Liftback Model



240MO26

Wagon Model

Instrument Panel

- The instrument panel's design, composed of smooth curving lines, expresses the cabin's spaciousness.
- The use of painted, surface-treated, and chrome plated parts, as well as the greatest possible minimization of openings and break lines, express a sense of quality.

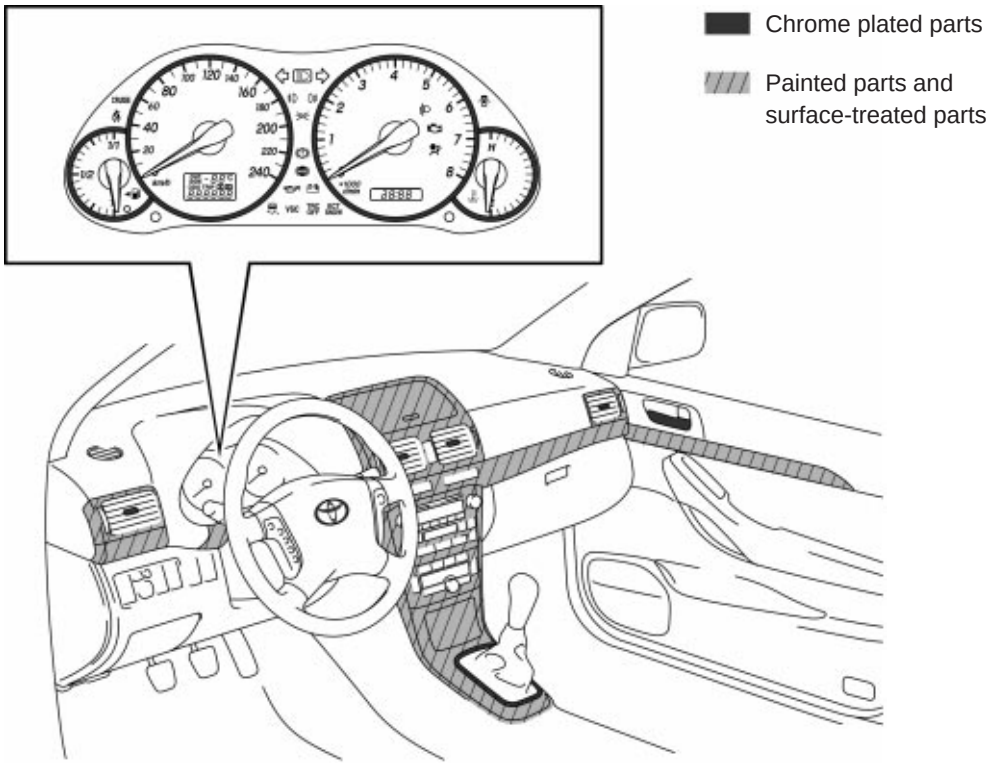

240MO28

- The instrument panel features an easy-to-use auxiliary box, cup holder, and front ashtray. (Auxiliary box: available for ENTRY grade models only)

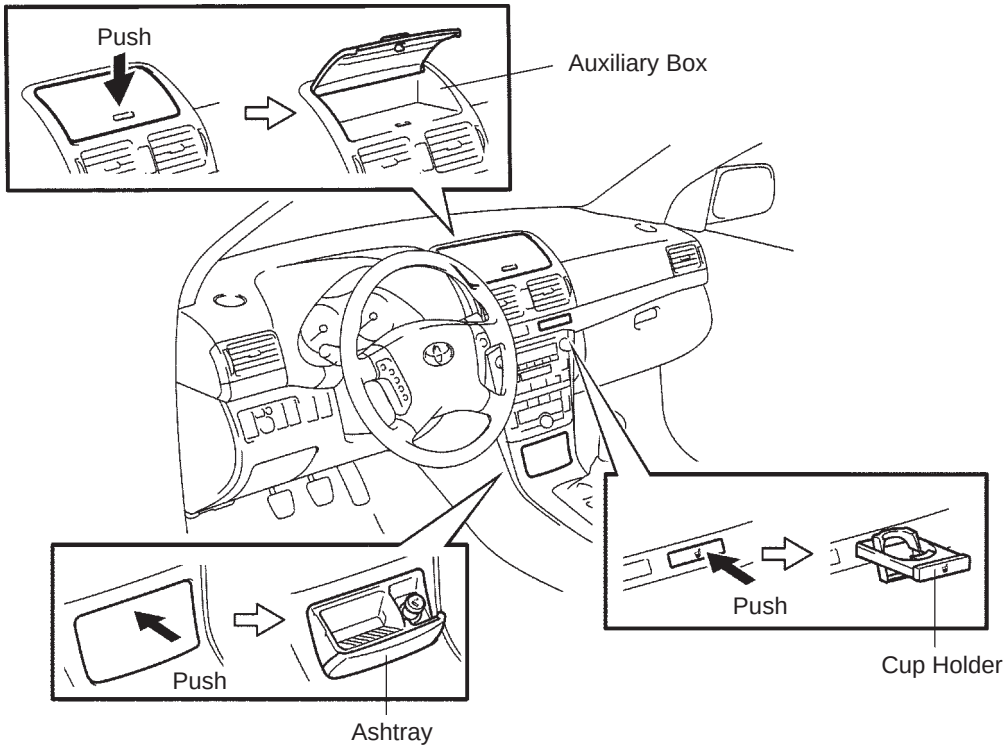

240MO27

Steering Wheel

- ENTRY grade models feature a urethane 4-spoke type steering wheel, and MID TECHNICAL and MID ELEGANT grade models feature a leather 4-spoke type steering wheel.
- Europe models feature a steering pad switch that enables drivers to operate the audio system, switch to trip information display, and turn the navigation system's voice recognition function on and off without removing their hands from the steering wheel.

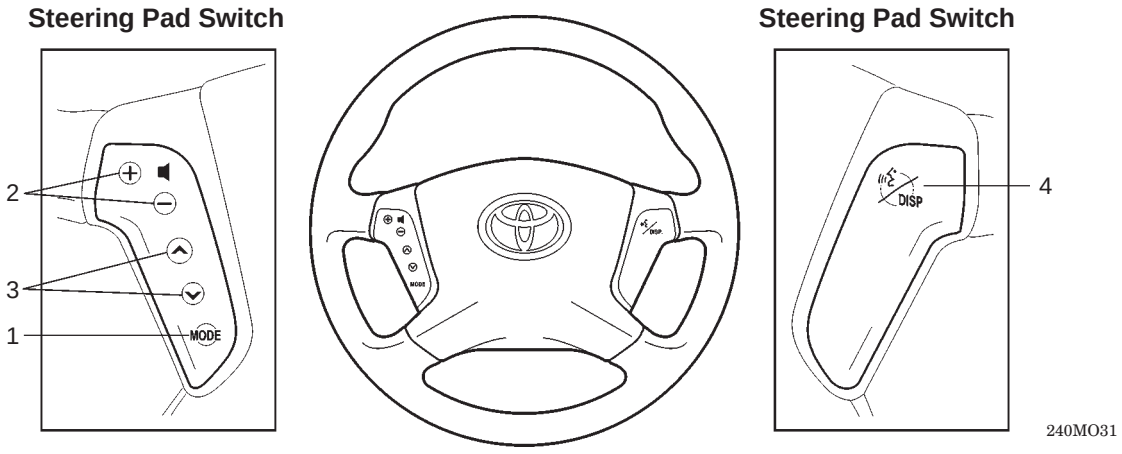

Steering Pad Switch Function

System			Button	Press for a short period	Press for a long period
Audio	Mode		1	Switch AM/FM of radio or TAPE or CD	Switch to OFF
	Volume		2	UP/DOWN for audio system volume	
	Seek	Radio	3	Channel UP/DOWN	UP/DOWN to select a station
		Tape		Search FF/REW	FF/REW
		CD		Track UP/DOWN	Disc UP/DOWN
Trip Information			4	Switching trip information display	In the case of average vehicle speed mode or driving distance after engine start mode, reset each information
Navigation			4	Voice recognition ON/OFF	—

Seat

- The seat features a high-quality finish with an elegant stitch.
- Leather seats are available as an option for MID TECHNICAL and MID ELEGANT grade with the 1AZ-FSE or 1CD-FTV engine models.

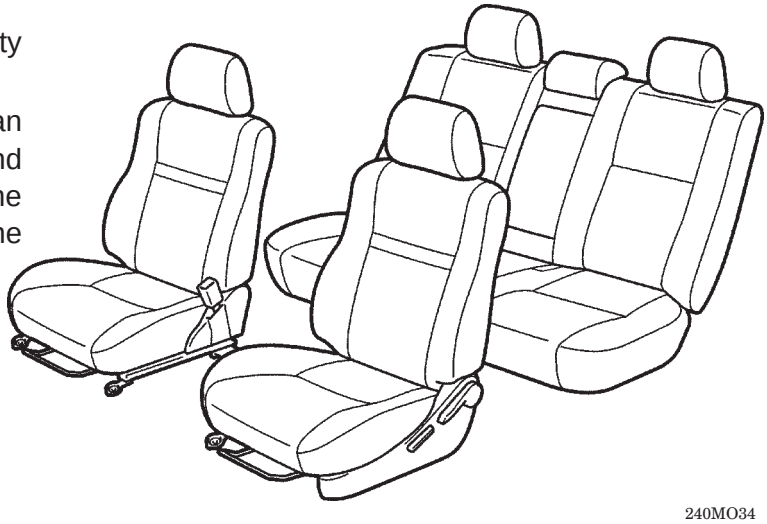

240MO34

Front Seat

- Power seats are available as a set option with leather seats.
- The adjustment lever of manual seats now features a ratchet mechanism for ease of operation.
- A seat heater is available as an option for Europe LHD models.

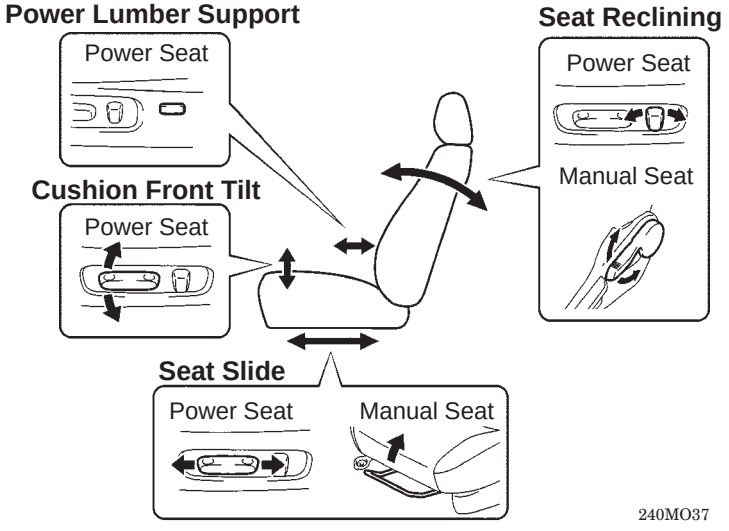

240MO37

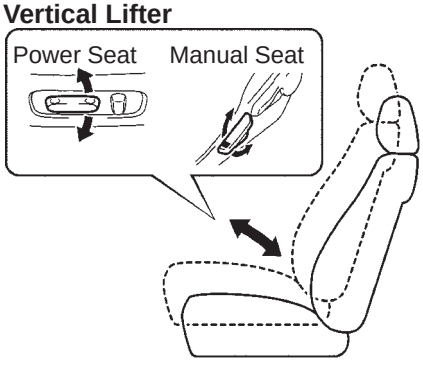

240MO38

Front Seat Function

Item	Manual Seat		Power Seat	
	Driver's	Passenger's	Driver's	Passenger's
Seat Slide	240 mm: 15 mm x 16-Steps		240 mm: Step Less	
Seat Reclining	48°: Step Less (Lever 1 operation: Max. 1°)		48°: Step Less	
Vertical Lifter	45 mm: Step Less (Lever 1 operation: Max. 2.5 mm)	—	50 mm: Step Less	—
Cushion Front Tilt	—	—	34 mm: Step Less	—
Power Lumber Support	—	—	Standard	—
Headrest Vertical Adjuster	60 mm: 15 mm x 4-Steps			
Headrest Swing Adjuster	18.5°: Standard (MID TECHNICAL and MID ELEGANT grade for Europe and General Countries)			
Seat Heater	Option: LHD for Europe			

Rear Seat

- ENTRY grade sedans feature a fixed seat; other models feature seats with a 60:40 separate seat back.
- Liftback and wagon models feature a 60:40 separate seat.

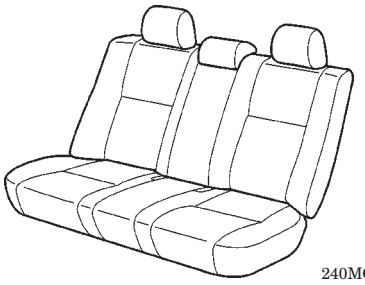
240MO40

Fixed Seat

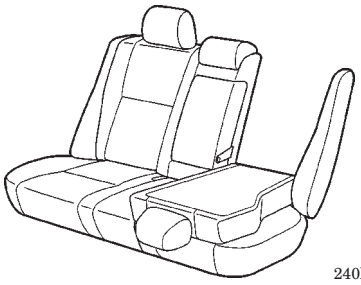
240MO41

60:40 Separate Seat Back

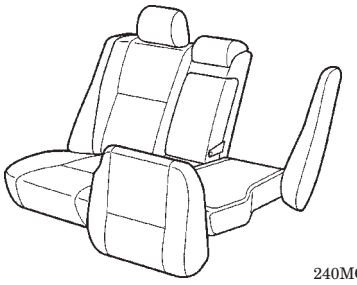
240MO43

60:40 Separate Seat

- CRS (Child Restraint System) ISO-FIX bar and CRS tether anchor bracket for securing child seats have been provided on all the vehicle.

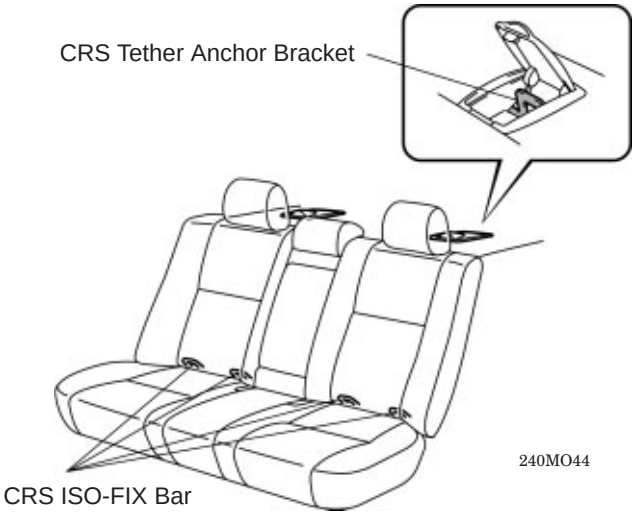

240MO44

Sedan Model

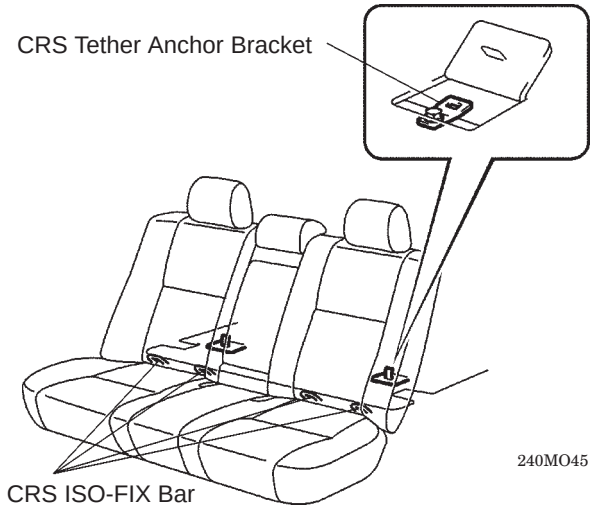

240MO45

Liftback and Wagon Model

Luggage

4-Door Sedan and 5-Door Liftback

The luggage room features an auxiliary box, grocery bag hook, and tie-down hook for ease of use.

Sedan Model

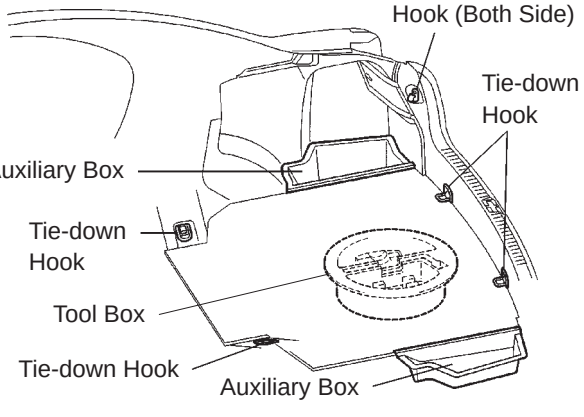

240MO52

Liftback Model

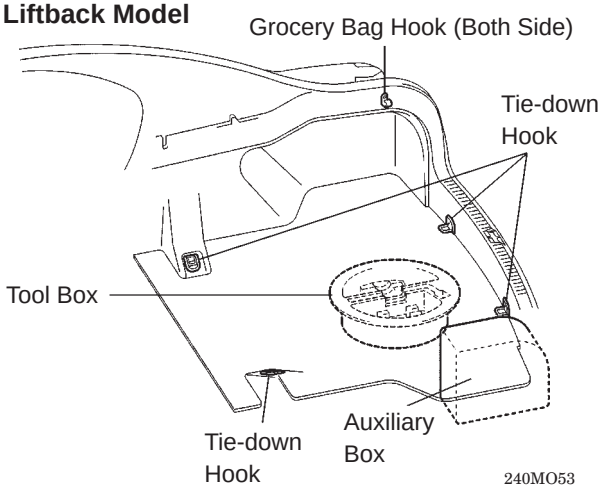

240MO53

Rear Seat

- ENTRY grade sedans feature a fixed seat; other models feature seats with a 60:40 separate seat back.
- Liftback and wagon models feature a 60:40 separate seat.

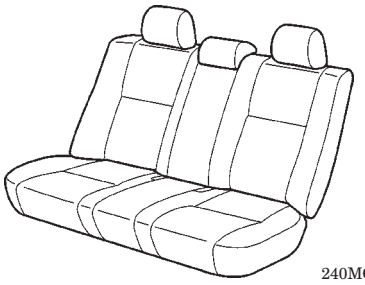
240MO40

Fixed Seat

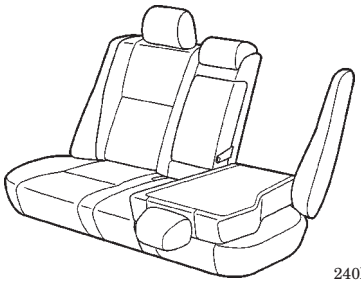
240MO41

60:40 Separate Seat Back

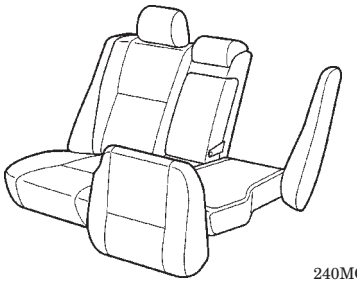
240MO43

60:40 Separate Seat

- CRS (Child Restraint System) ISO-FIX bar and CRS tether anchor bracket for securing child seats have been provided on all the vehicle.

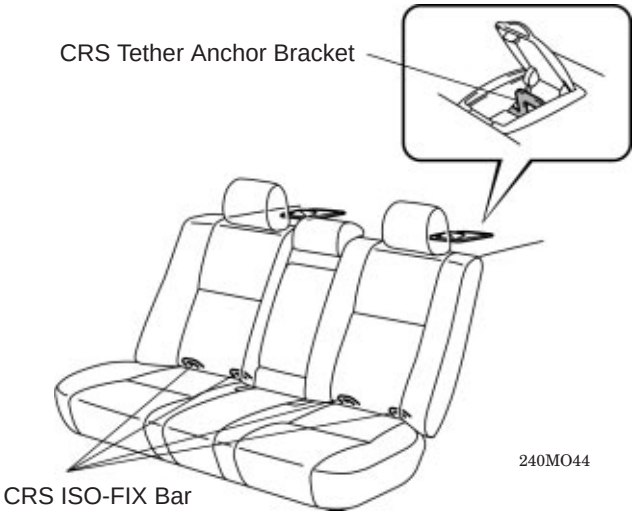

240MO44

Sedan Model

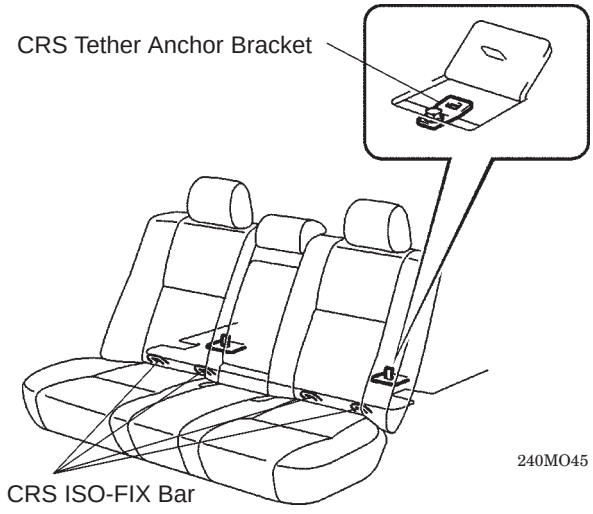

240MO45

Liftback and Wagon Model

Luggage

4-Door Sedan and 5-Door Liftback

The luggage room features an auxiliary box, grocery bag hook, and tie-down hook for ease of use.

Sedan Model

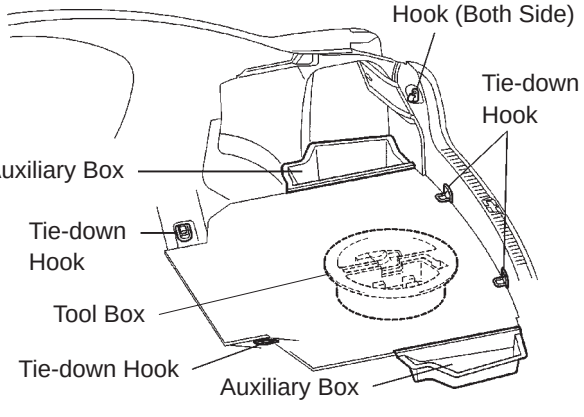

240MO52

Liftback Model

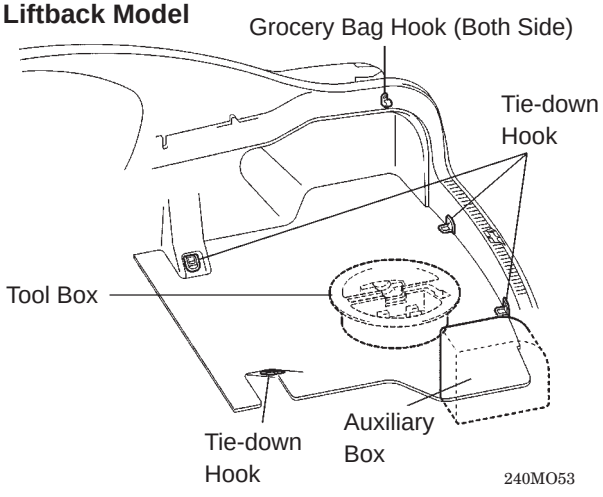

240MO53

5-Door Wagon

The luggage room features an abundance of items for ease of use.

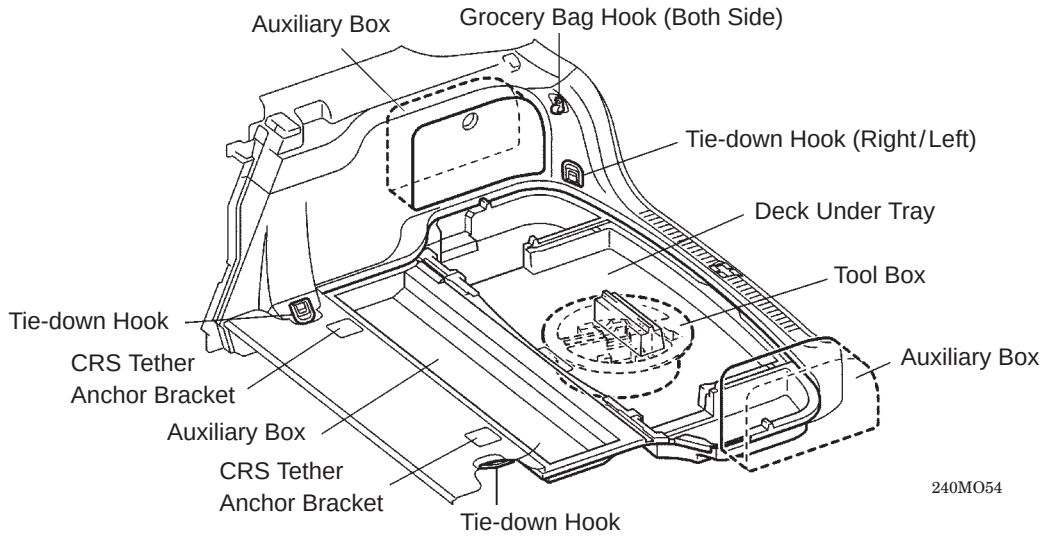

Deck Under Tray

The deck under tray, in combination with a folding deck board, makes many uses possible.

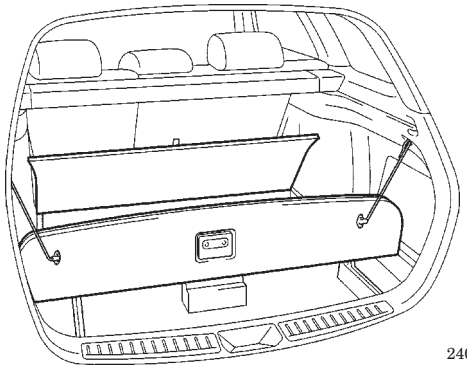

Deck board folded once

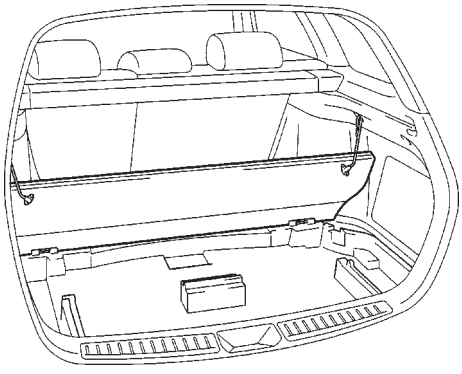

Deck board folded twice

Luggage Cover

- A luggage cover than can be removed and reattached easily is standard equipment on 1AZ-FE engine models.
- A luggage cover that incorporates a separation net that can divide the cabin from the luggage room is available as an option for 1AZ-FE engine models.
- After removal, the luggage cover can be stored in the deck under tray.

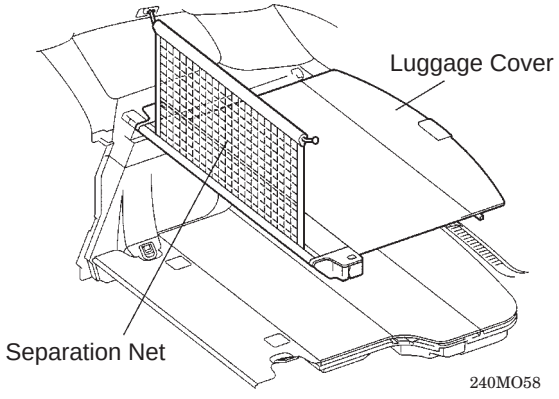

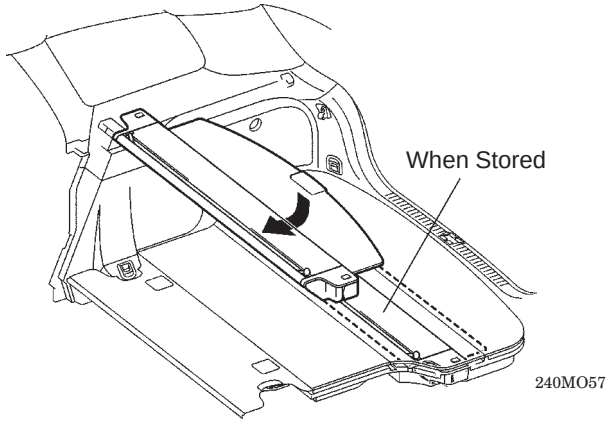

EQUIPMENT

Multi Display

A multi display is available as an option for MID TECHNICAL and MID ELEGANT grade Europe models.

Navigation and trip information can be displayed on the multi display.

Navigation System

- Through the use of the GPS (Global Positioning System) and map data in a DVD (Digital Versatile Disc), the navigation system analyzes the position of the vehicle and indicates that position on the map that is displayed on this screen.
- The navigation system employs a voice recognition function with a voice recognition microphone installed in the overhead console. The voice recognition function can be turned on and off using the steering switch on the steering wheel.
- The navigation system is operated using a remote controller.

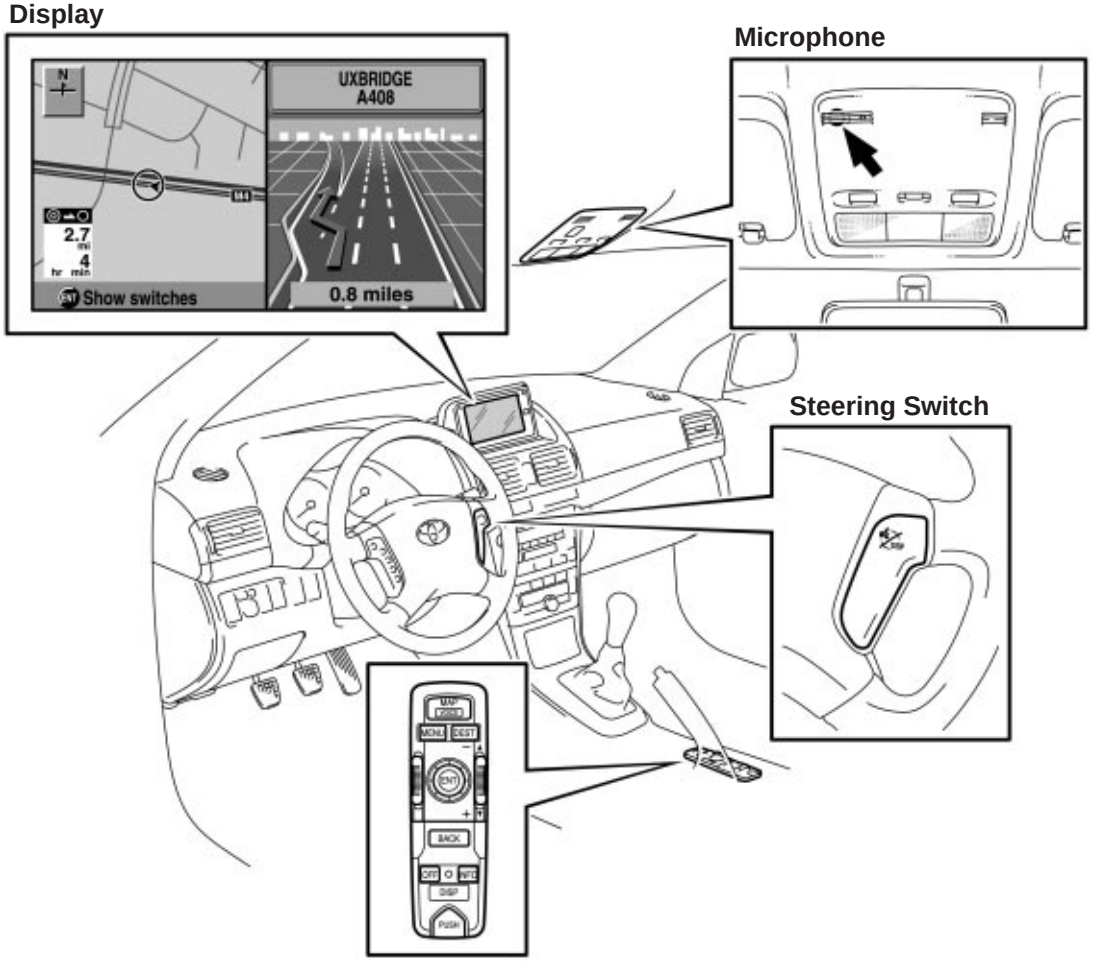

240MO59

Trip Information

Average fuel consumption after refueling, momentary fuel consumption, average vehicle speed, driving distance after engine start, and driving range can be displayed.

Audio System

- The audio system has a head unit with three built-in functions: CD player, cassette player, and radio.
- By adopting new digital sound processing program, this unit can emphasize sound faithfully without phase distortion, and produce extremely clear and powerful sound.

Figure for image

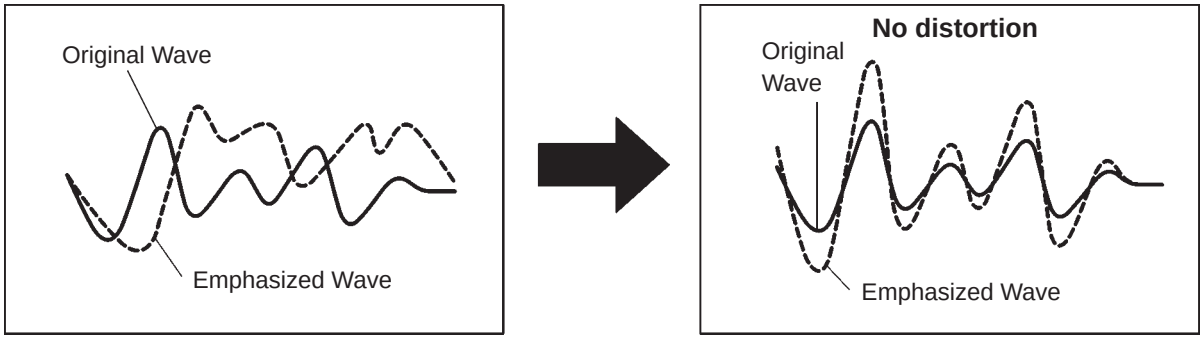

By old technology **By new technology** 240MO68

Head Unit Specifications

Design	Specifications	Destination
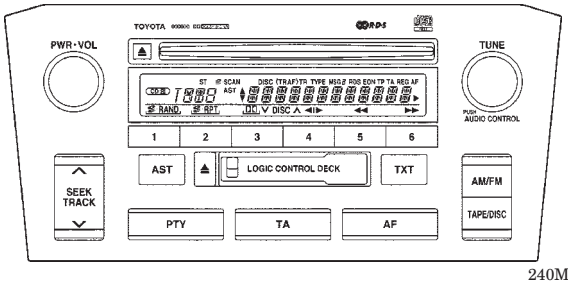 240MO66	● AM / FM Tuner ● Cassette Player ● CD Player ● DSP ● Amplifier Power: 40W x 4-Ch. ● 8-speaker System ● RDS function ● Manufacturer: Panasonic	Europe
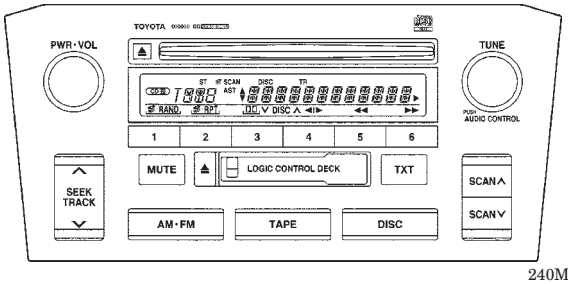 240MO67	● AM / FM Tuner ● Cassette Player ● CD Player ● DSP ● Amplifier Power: 40W x 4-Ch. ● 8-speaker System ● Manufacturer: Panasonic	General Countries

Speaker's Specification

An 8-speaker system with both tweeters and full range speakers is housed in the front and rear doors.

Speaker		Caliber	Impedance
Front Door	Tweeter	2.5 cm (1.0 in.)	4 Ω
	Full Range	16.0 cm (6.3 in.)	4 Ω
Rear Door	Tweeter	2.5 cm (1.0 in.)	4 Ω
	Full Range	14.0 cm (5.5 in.)	4 Ω

Location

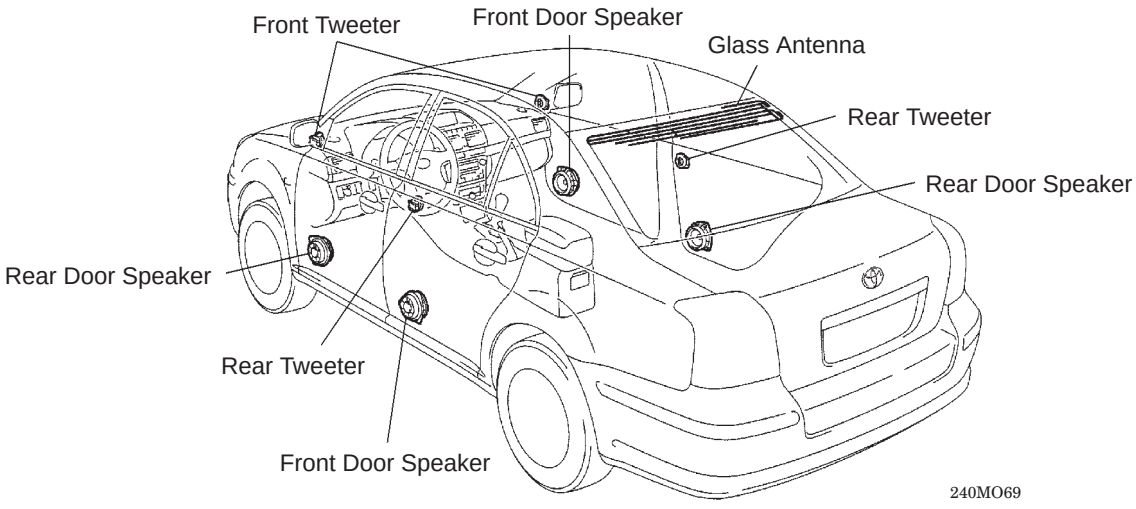

Sedan Model

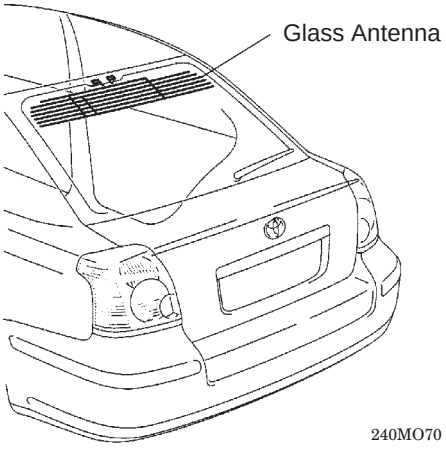

Liftback Model

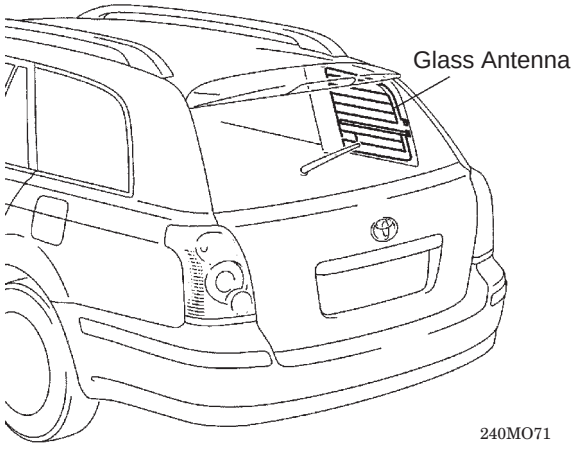

Wagon Model

Multi-information Display

- A multi-information display is standard equipment on MID TECHNICAL and MID ELEGANT grade Europe models and available as an option for ENTRY grade models.
- Average fuel consumption after refueling, momentary fuel consumption, average vehicle speed, driving distance after engine start, and driving range can be displayed.
- The vehicle information screens can be switched and the average vehicle speed or driving distance after engine start can be reset using the steering pad switch.

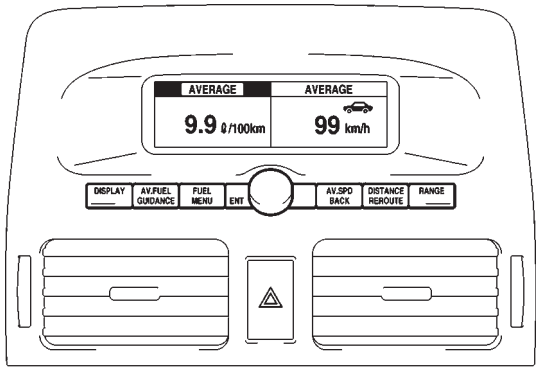

Location

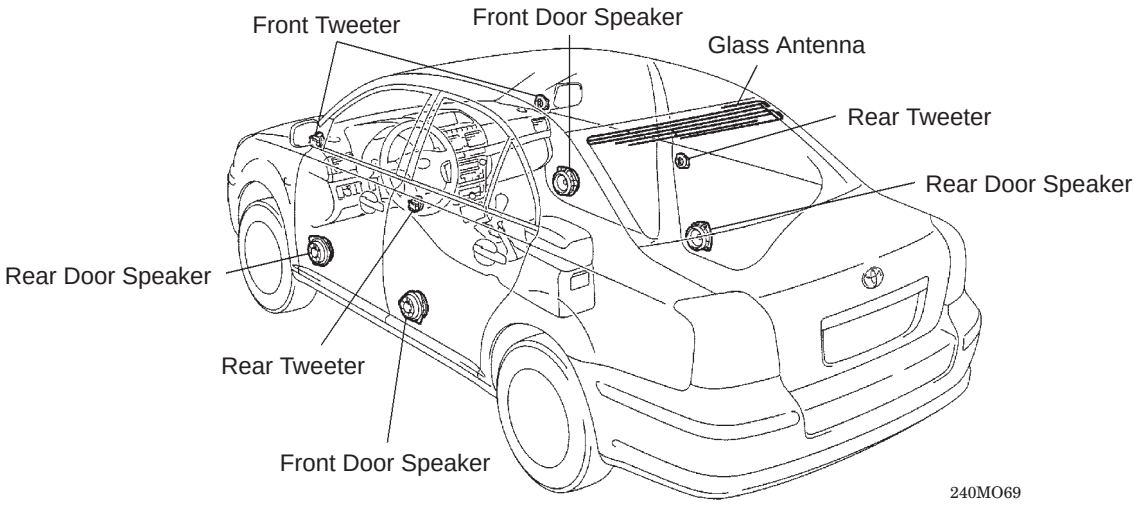

Sedan Model

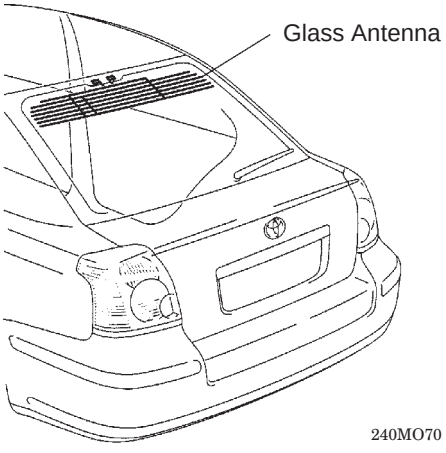

Liftback Model

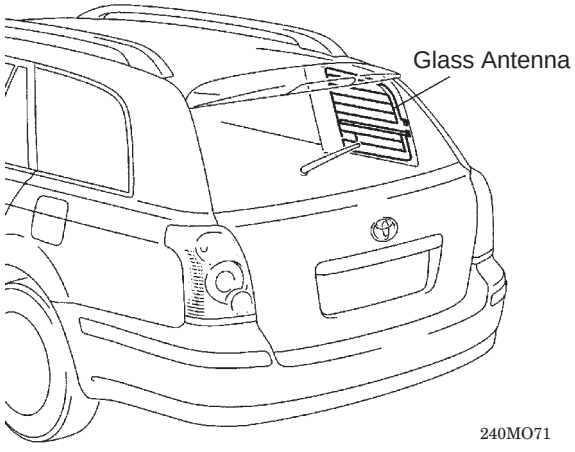

Wagon Model

Multi-information Display

- A multi-information display is standard equipment on MID TECHNICAL and MID ELEGANT grade Europe models and available as an option for ENTRY grade models.
- Average fuel consumption after refueling, momentary fuel consumption, average vehicle speed, driving distance after engine start, and driving range can be displayed.
- The vehicle information screens can be switched and the average vehicle speed or driving distance after engine start can be reset using the steering pad switch.

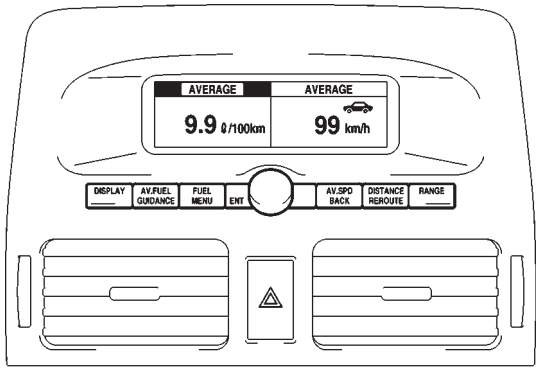

Air Conditioner System

- A manual air conditioner is standard equipment on ENTRY grade models and an automatic air conditioner on MID TECHNICAL and MID ELEGANT grade models.

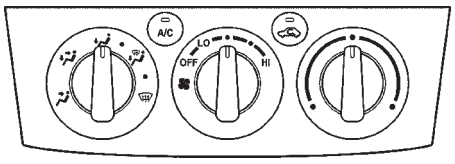

240MO95

Manual Air Conditioner Control Panel for LHD model

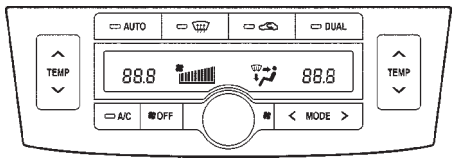

240MO96

Automatic Air Conditioner Control Panel for LHD model

- The automatic air conditioner employs a left/right independent temperature control system.

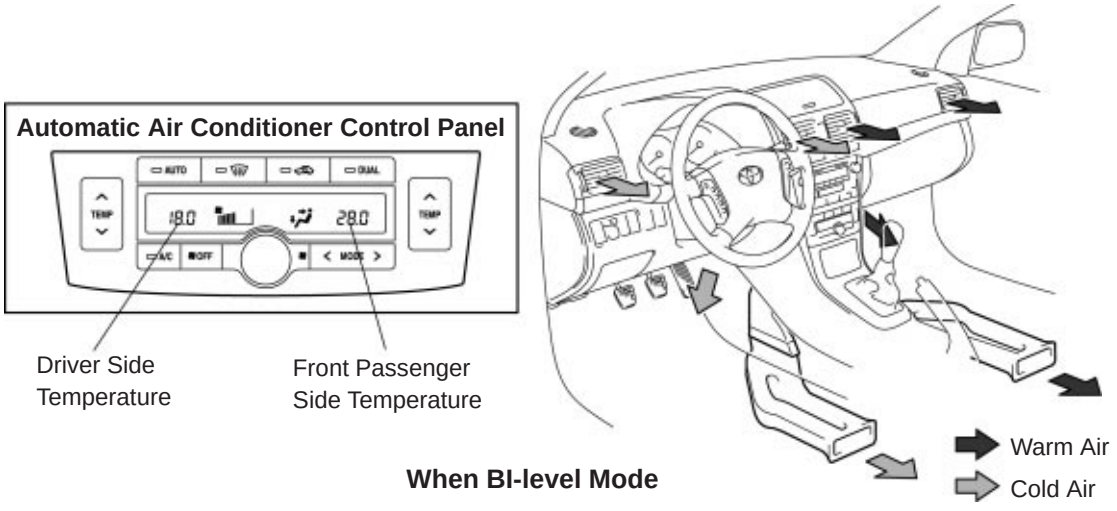

When BI-level Mode

240MO97

Power Heater System

- 1CD-FTV engine models feature three power heater systems: PTC, hot-gas, and combustion.
- The hot-gas heater was newly developed to enhance the heater performance of the diesel engine.
- The hot-gas heater features an orifice, magnetic valve, and hot-gas tank added to the air conditioner components. Refrigerant raised to a high temperature and pressure by the compressor is guided to the evaporator and the heat is released.

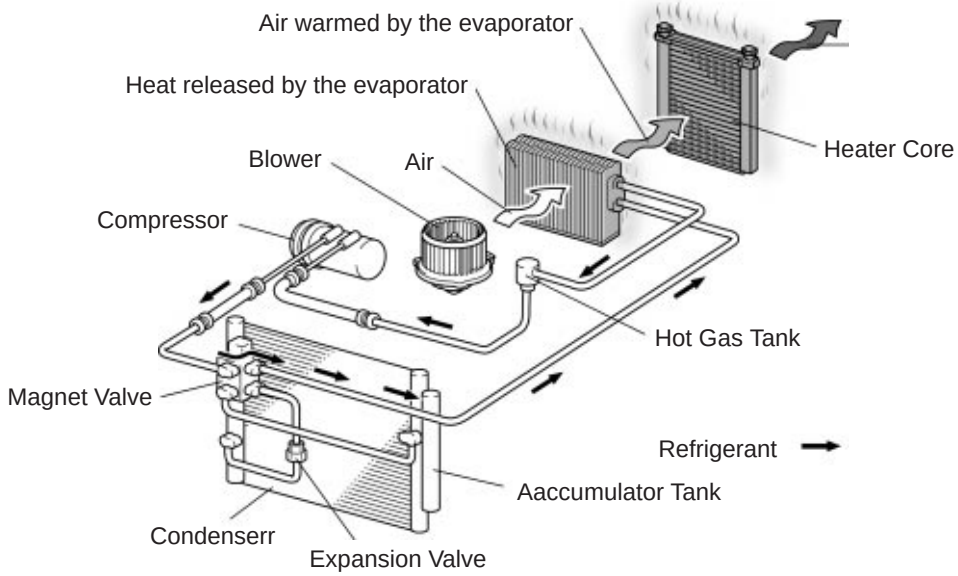

240MO98

Windshield & Door Glass

Dark gray privacy glass is available as an option for the rear door glass, rear quarter glass, and back door glass of wagon models.

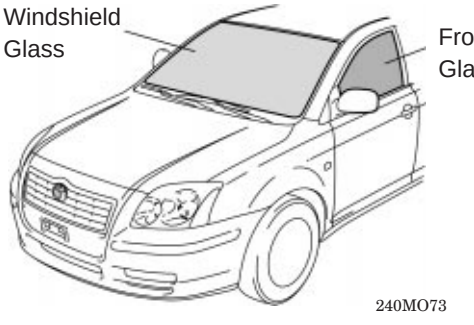

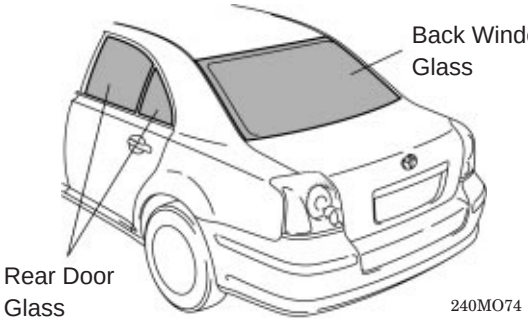

Sedan Model

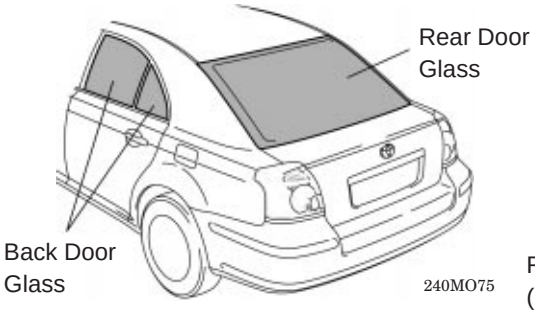

Liftback Model

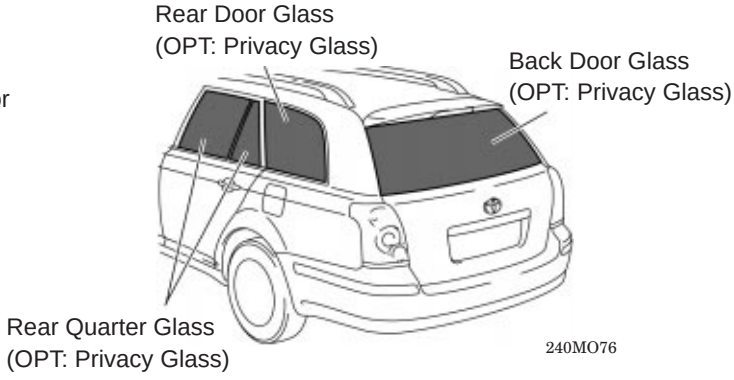

Wagon Model

Glass Portion	Provided	Glass Type	UV Reduction Rate (%) (as reference)	Visible Light Penetration (%) (as reference)
Windshield	Standard	Green Laminated	100 %	70 % Min.
Front Door	Standard	Green	82 %	70 % Min.
Rear Door	Standard	Green	82 %	70 % Min.
	Option (Wagon only)	Privacy	96 %	24 %
Rear Quarter (Wagon only)	Standard	Green	82 %	—
	Option	Privacy	96 %	—
Back Window or Back Door	Standard	Green	78 %	70 % Min.
	Option (Wagon only)	Privacy	96 %	20 %

Rear Sunshade

A hand-operated rear sun shade is available as an option for Europe sedans and liftback models and is standard equipment on General Countries sedan models.

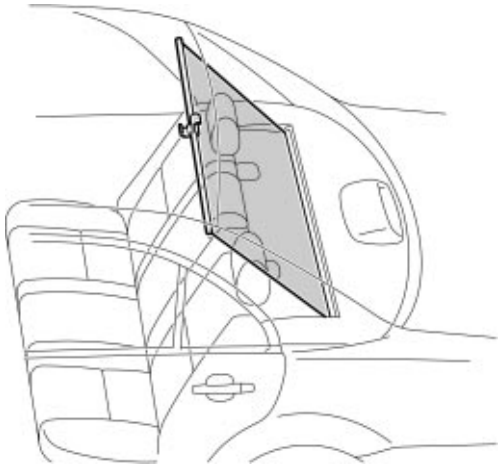

Sedan Model

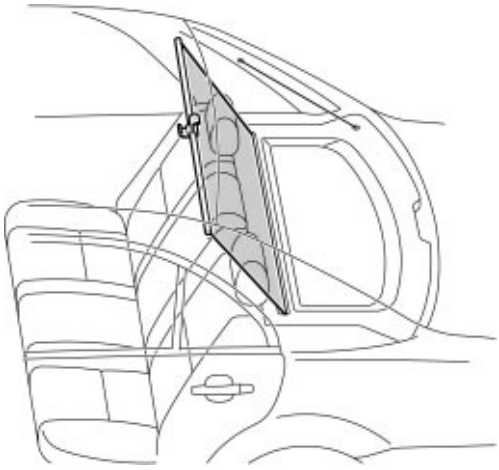

Liftback Model

Power Outlet

The back surface of the console is equipped with a 12V-120W power outlet for MID TECHNICAL and MID ELEGANT grade only.

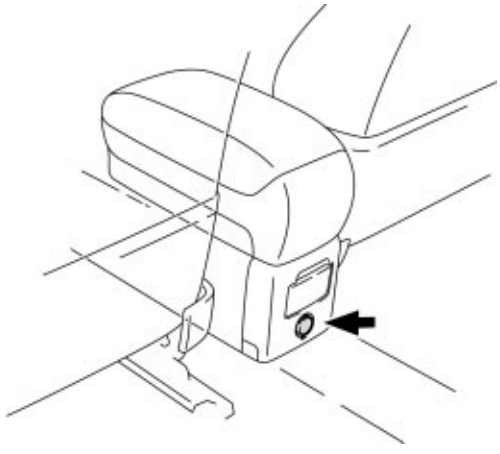

Wiper System

- A wiper system with raindrop sensing function is standard equipment on MID TECHNICAL and MID ELEGANT grade models.
- Raindrop sensing function: When the wiper switch is in the auto position, a rain sensor built into the windshield glass detects the amount of raindrops and causes the wipers to operate automatically at the optimum timing for that amount.

PERFORMANCE

Power Train

Engine

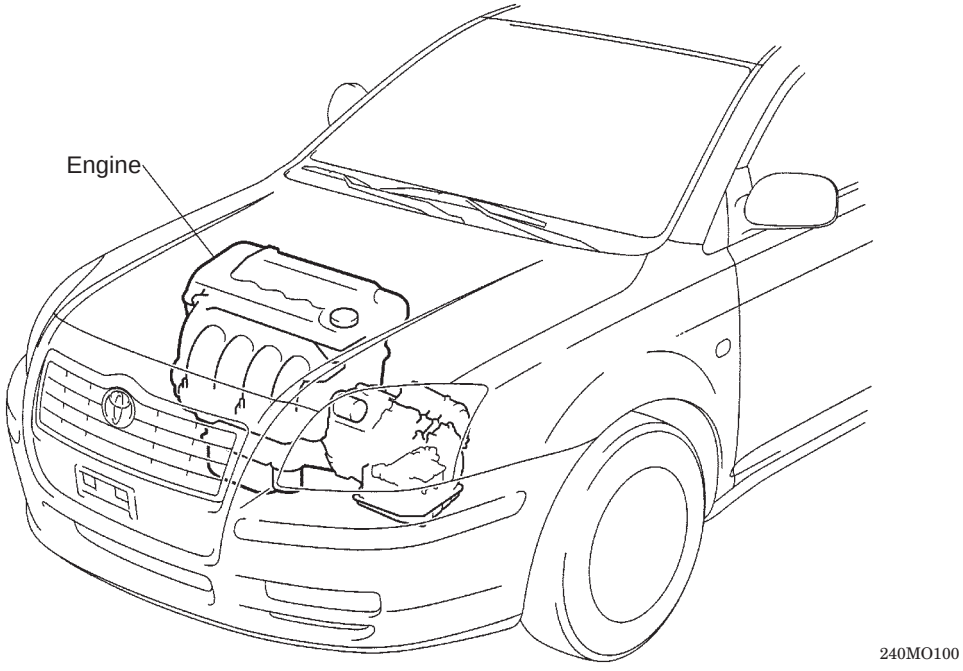

Type	1ZZ-FE	3ZZ-FE
Valve Mechanism	16-Valve DOHC with VVT-i	16-Valve DOHC with VVT-i
Displacement	1794 cm^3 (109.5 cu. in.)	1598 cm^3 (97.5 cu. in.)
Max. Output	95 kW/6000 rpm	81 kW/6000 rpm
Max. Torque	170 N·m/4200 rpm	150 N·m/3800 rpm

Type	1AZ-FE (Unleaded)	1AZ-FE (Leaded)
Valve Mechanism	16-Valve DOHC with VVT-i	16-Valve DOHC
Displacement	1998 cm^3 (121.9 cu. in.)	1998 cm^3 (121.9 cu. in.)
Max. Output	108 kW/6000 rpm	100 kW/5600 rpm
Max. Torque	192 N·m/4000 rpm	190 N·m/4000 rpm

Type	1AZ-FSE (D-4*1)	1CD-FTV (D-4D*2)
Valve Mechanism	16-Valve DOHC with VVT-i	16-Valve DOHC
Displacement	1998 cm^3 (121.9 cu. in.)	1995 cm^3 (121.7 cu. in.)
Max. Output	108 kW/5700 rpm	85 kW/3600 rpm
Max. Torque	196 N·m/4000 rpm	280 N·m/2000 – 2200 rpm

*1: Direct injection 4-stroke gasoline engine
*2: Direct injection 4-stroke common-rail diesel engine

Transaxle

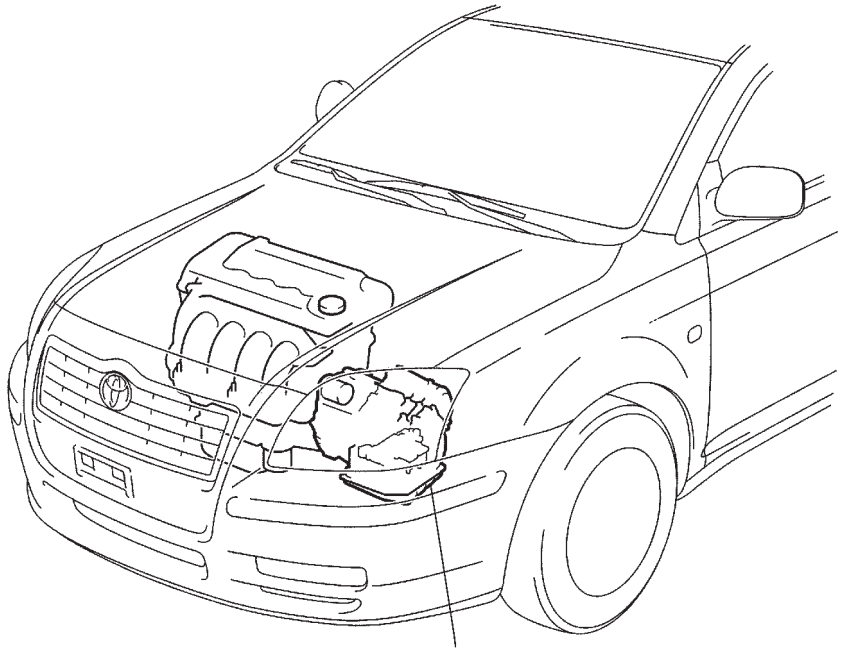

Manual Transaxle

Type	C50	C250	E354	E357
Combination with Engine	3ZZ-FE	1ZZ-FE	1AZ-FE & 1AZ-FSE	1CD-FTV
Gear Ratio 1st	3.545	3.545	3.538	3.538
2nd	1.904	1.904	2.045	1.913
3rd	1.310	1.310	1.333	1.258
4th	0.969	1.031	1.028	0.918
5th	0.815	0.815	0.820	0.690
Reverse	3.250	3.250	3.583	3.583

Automatic Transaxle

- The new Avensis 4-speed automatic transaxle (Super ECT [Electronic Controlled Transaxle]) employs multi mode automatic transaxle.
- Multi mode automatic transaxle enables shifting that feels like manual when up (+) or down (–) in the “S” position.

Type	U241E	U341E
Combination with Engine	1AZ-FE & 1AZ-FSE	1ZZ-FE
Gear Ratio 1st	3.943	2.847
2nd	2.197	1.552
3rd	1.413	1.000
4th	1.020	0.700
Reverse	3.145	2.343

Chassis

Front Suspension

Type	MacPhason Strut Type Independent Suspension

Rear Suspension

Type	Double Wishbone Type Suspension

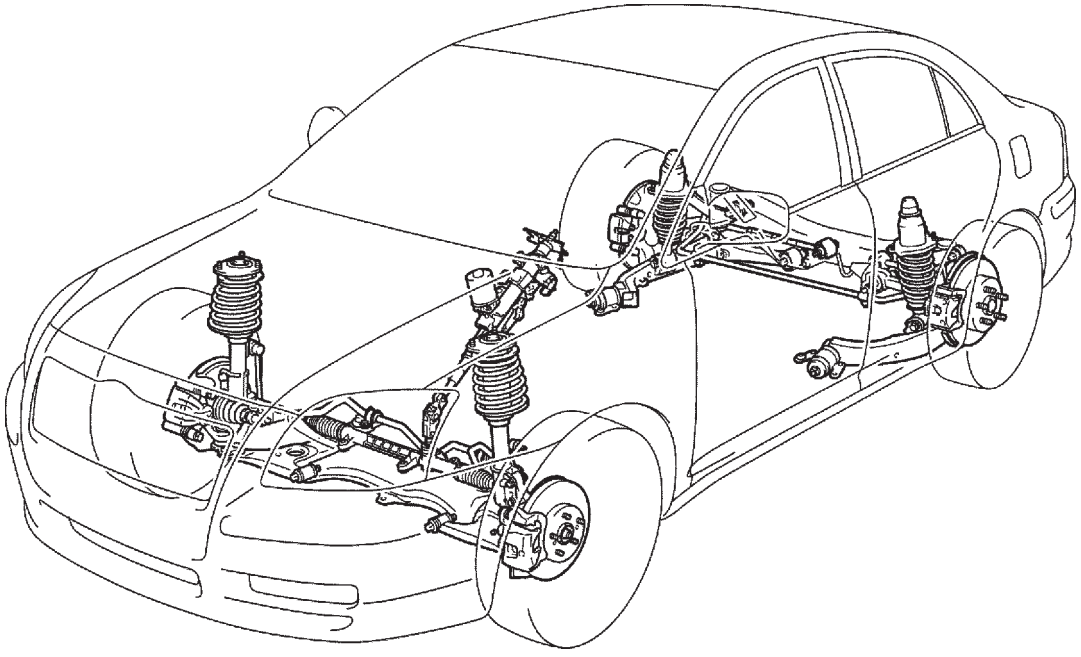

240MO99

EPS Model

Steering

Type	EPS (Electoronic Power Steering) (for 1ZZ-FE and 3ZZ-FE) Hydraulic Type Power Steering (for 1AZ-FSE, 1AZ-FE and 1CD-FTV)

Brake

Front Brake Type	Ventilated Disc	for 15-inch Wheel (for 1ZZ-FE, 3ZZ-FE and 1AZ-FE) for 16-inch Wheel (for 1AZ-FSE and 1CD-FTV)
Rear Brake Type	Solid Disc for 15-inch Wheel Size	
Brake Control System	ABS with EBD (for All models) ABS with EBD, Brake Assist, TRC and VSC*	

*: Standard for 1AZ-FSE engine models, Option for 1CD-FTV engine models

SAFETY

SRS (Supplemental Restraint System) Airbag System

- A newly developed SRS knee airbag is standard equipment for the driver's seat on the new Avensis.
- The SRS knee airbag is positioned in the lower part of the instrument panel on the driver's side to receive the impact of the driver's lower body when he or she shifts forward in the event of a frontal collision, contributing to prevention of secondary impact to the lower body.
- Dual-stage SRS airbags are standard equipment for the driver and front passenger seats. In the event of a severe frontal collision, the airbags function with the seat belts to help reduce the impact on the driver's and front passenger's head and chest. The seat position sensor is adopted only for the driver's seat to help the driver side SRS airbag deploy at the right moment.

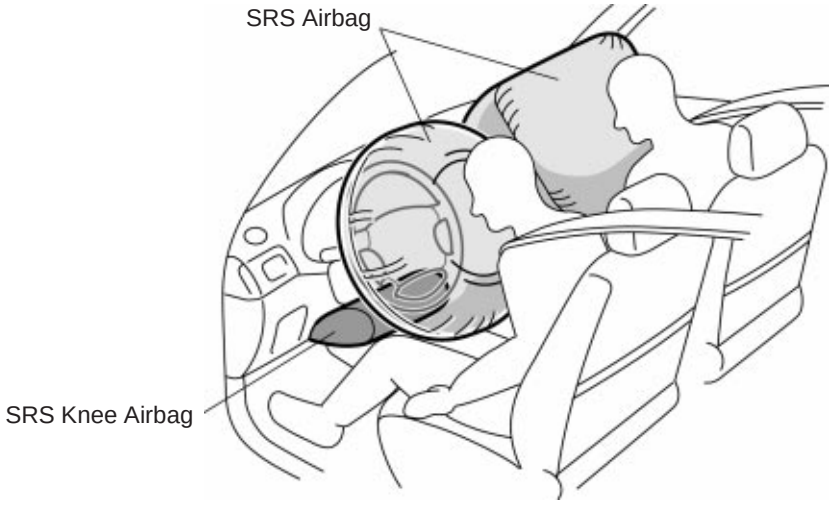

240MO83

- SRS side airbags (driver / front passenger seats) which help ease side impacts, are standard equipment.
- SRS curtain shield airbags (front/rear seats) that help ease side impacts are standard equipment for all models except 1AZ-FE engine models. They are available as an option for 1AZ-FE engine models.

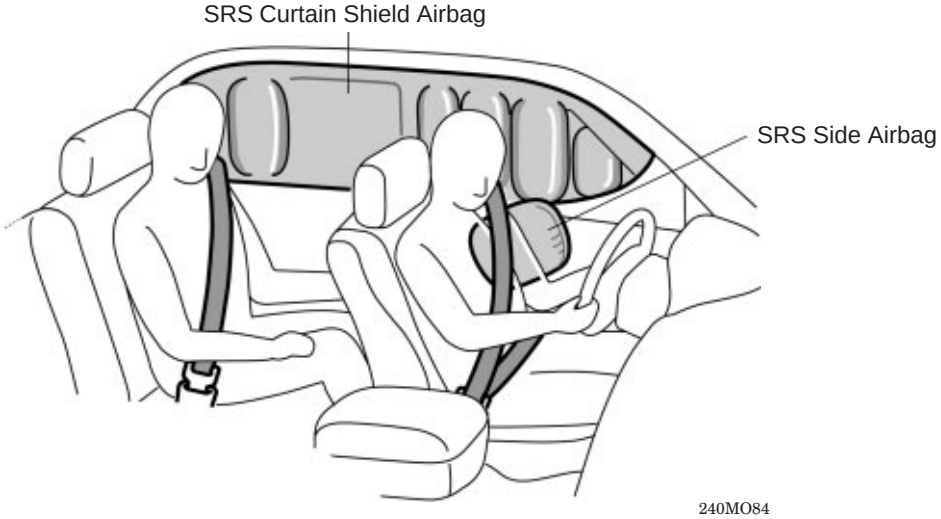

240MO84

DIMENSIONS

mm (in.)

4-Door Sedan

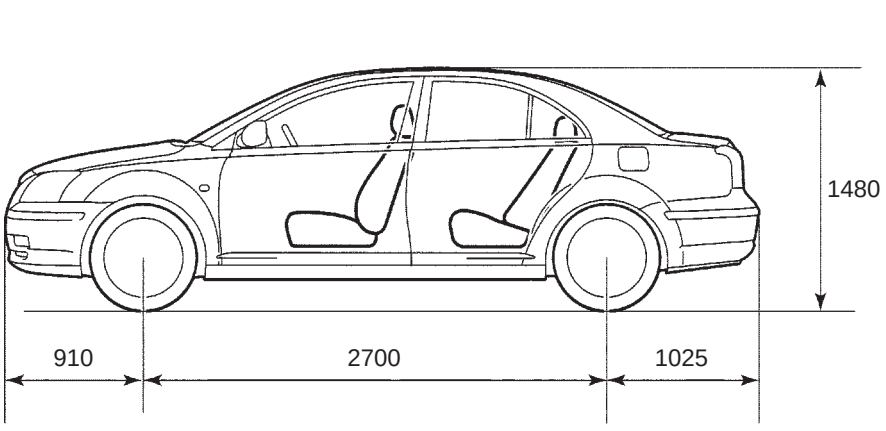

Front: 1505*1, 1515*2
Rear: 1500*1, 1515*2

240MO92

5-Door Liftback

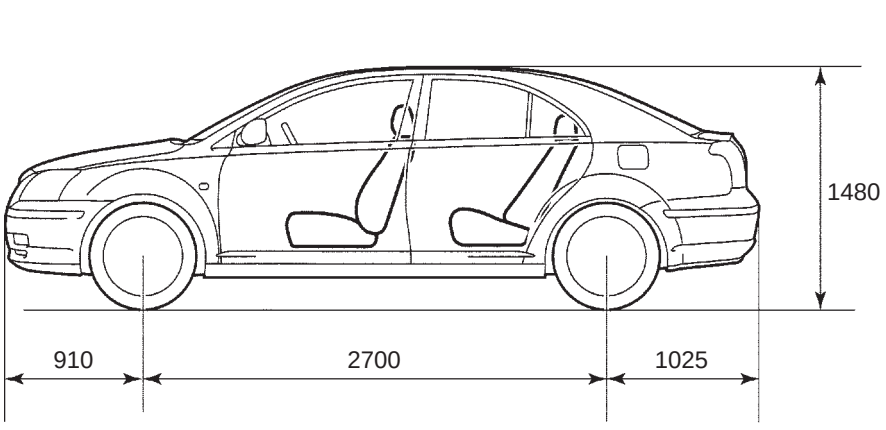

Front: 1505*1, 1515*2
Rear: 1500*1, 1515*2

240MO93

5-Door Wagon

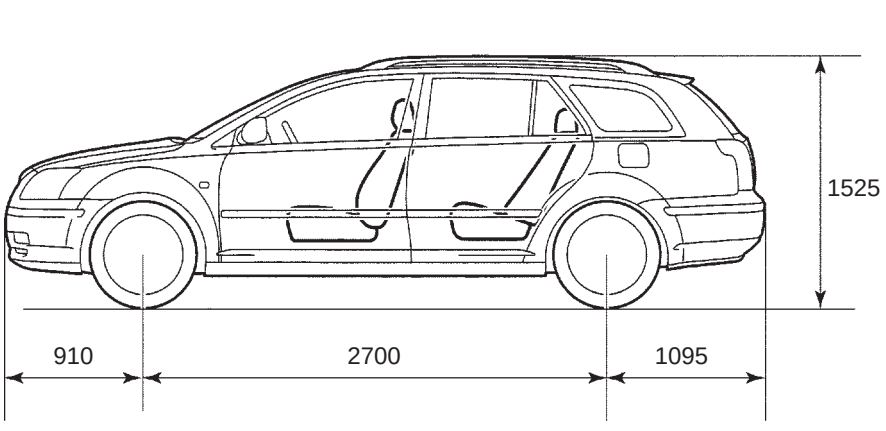

Front: 1505*1, 1515*2
Rear: 1500*1, 1515*2

240MO94

*1: 16 in. or 17 in.Tire
*2: 15 in. Tire

MO

EQUIPMENT LIST

●: Standard OP: Option

				Europe			General Countries
				ENTRY	MID TECHNICAL	MID ELEGANT	
Exterior							
Rear Spoiler		Wagon		●	●	●	—
Side Protection Moulding				OP	OP	OP	OP
Glass	Windshield		Green	●	●	●	—
	Front Side		Green	●	●	●	●
	Rear Side & Back		Green	●	●	●	●
		Wagon	Privacy	OP	OP	OP	—
	Rear Quarter	Wagon	Green	●	●	●	—
			Privacy	OP	OP	OP	—
Chassis							
Tire	195/65 R15		3ZZ-FE & 1ZZ-FE & 1AZ-FE	●	●	●	●
	205/55 R16		1AZ-FSE & 1CD-FTV	●	●	●	—
			3ZZ-FE & 1ZZ-FE & 1AZ-FE	OP	OP	OP	OP
	215/45 R17		1AZ-FE	—	OP	OP	—
			1AZ-FSE	—	OP	OP	—
Disc Wheel	15 x 6J Steel		3ZZ-FE & 1ZZ-FE & 1AZ-FE	●	●	●	●
	16 x 6 1/2 J Steel		1AZ-FSE & 1CD-FTV	●	●	●	—
			3ZZ-FE & 1ZZ-FE & 1AZ-FE	OP	OP	OP	OP
	16 x 6 1/2 JJ Aluminum			OP	OP	OP	OP
	16 x 6 1/2 JJ Light Weight Aluminum			OP	OP	OP	OP
	17 x 7JJ Aluminum		1AZ-FE	—	OP	OP	—
			1AZ-FSE	—	OP	OP	—
ABS (Anti-lock Brake System) with EBD (Electronic Brake force Distribution)				●	●	●	●
VSC (Vehicle Stability Control) & Brake Assist & TRC (Traction Control)			1AZ-FSE	—	●	●	—
			1CD-FTV	OP	OP	OP	
Steering	Wheel		4-Spoke Urethane	●	—	—	●
			4-Spoke Leather	—	●	●	—
	Column		Manual Tilt & Telescopic	●	●	●	●
	EPS*1		3ZZ-FE & 1ZZ-FE	●	●	●	—
	Hydraulic Type Power Steering		1AZ-FSE & 1CD-FTV & 1AZ-FE	●	●	●	●
Body							
Seat	Cover	Fabric		●	●	●	●
		Leather	1AZ-FSE & 1CD-FTV	—	OP	OP	—
	Front	Manual		●	●	●	●
		Power	1AZ-FSE & 1CD-FTV	—	OP	OP	—
	Rear	Fix	Sedan	●	—	—	—
		60:40 Folding	Sedan	—	●	●	●
		60:40 Double Folding	Liftback & Wagon	●	●	●	—
Seat Belt	Front	3-Point ELR*2 Electrical Sensing Type Pretensioner & Force Limiter		●	●	●	●
	Rear	3-Point ELR*2 & ALR*3		●	●	●	●
CRS (Child Restraint System) Anchor System (Rear Outside Seat Only)				●	●	●	●

*1: Electoronic Power Steering
*2: Emergency Locking Retractor
*3: Automatic Locking Retractor

●: Standard OP: Option

				Europe			General Countries
				ENTRY	MID TECHNICAL	MID ELEGANT	
Body Electrical							
Headlight		Projector		●	●	●	●
		HID (High Intensity Discharge)		—	OP	OP	—
Headlight Beam Level Control System		Manual		●	●	●	—
		Automatic		—	OP	OP	—
Headlight Cleaner System				OP*5	OP	OP	—
Fog Light	Front	Except for 1AZ-FE		OP	●	●	—
		1AZ-FE		—	OP	OP	OP*4
	Rear			●	●	●	—
Illuminated Entry System				●	●	●	●
Navigation System				—	OP	OP	—
Multi information Display				OP	●	●	—
Audio System		8-speaker Only		OP	OP	OP	OP
		Radio / CD / Cassette / 8-speaker		●	●	●	●
		Steering Switch		●	●	●	—
Air Conditioner		Manual		●	—	—	●
		Automatic		—	●	●	—
		Without		OP	—	—	OP
Heater		Conventional Type	Except for 1CD-FTV	●	●	●	●
		PTC Type	1CD-FTV	OP	—	—	—
		Hot Gas Type	1CD-FTV	●	●	●	—
		Combustion Type	LHD of 1CD-FTV	—	OP	OP	—
Wiper System	Front	Adjustment Interval INT Function		●	—	—	●
		Raindrop Sensing Function		—	●	●	—
	Rear	Intermittent Function	Liftback & Wagon	●	●	●	—
Power Window System		Front Door One-Motion Auto Up-and-Down, Jam Protection Function		●	—	—	●
		All-Door One-Motion Auto Up-and-Down, Jam Protection Function		OP	●	●	OP
Door Lock Control System		Power Door Look Control System		●	●	●	●
		Wireless Door Look Remote Control System		●	●	●	—
		Double Locking System	Except for 1AZ-FE & LHD	●	●	●	—
Engine Immobiliser System		Except for 1AZ-FE		●	●	●	—
		1AZ-FE		—	OP	OP	
Theft Deterrent System		Except for 1AZ-FE & 1CD-FTV		●	●	●	—
SRS*5 Airbag System		Driver & Front Passenger & Side & Knee Airbags	Except for 1AZ-FE	OP	—	—	—
			1AZ-FE	—	●	●	●
		Driver & Front Passenger & Side & Knee & Curtain Shield Airbags	Except for 1AZ-FE	●	●	●	—
			1AZ-FE	—	OP	OP	
Cruise Control System		1AZ-FSE & 1CD-FTV		—	OP	OP	—
Outside Rear View Mirror		Electrical Retractable with Heater		—	●	●	—
		Electrical Retractable		—	—	—	●
Inside Rear View Mirror		Automatic Glare-Resistant EC (Electrical) Type		—	●	●	—
		Manual Glare-Resistant Type		●	—	—	●
Power Tilt Up-and-Sliding Moon Roof (with Jam Protection Function)		Except for 1AZ-FSE		OP	OP	OP	—
		1AZ-FSE		—	OP*6	OP*6	—

*4: LHD Models
*5: Supplemental Restraint System
*6: Except for Automatic Transaxle of Wagon Models

MO

– MEMO –

AVALON

OUTLINE OF NEW FEATURES

1. 1MZ-FE Engine

The TOYOTA genuine Super Long Life Coolant (SLLC) has been adopted. As result, the maintenance interval has been extended.

▶ Specifications ◀

Model			New	Previous
Engine Coolant	Capacity liters (US qts, Imp.qts)		9.0 (9.5, 7.9)	←
	Type		TOYOTA Genuine SLLC	TOYOTA Genuine LLC
	Color		Pink	Red
	Maintenance Intervals	First time	160,000 km (100,000 mile)	Every 40,000 km (25,000 mile) or 24 months whichever comes first
		Subsequent	Every 80,000 km (50,000 mail)	
Thermostat	Operating Temperature °C (°F)		80 – 84 (176 – 183)	←

- SLLC is pre-mixed (50 % coolant and 50 % distilled water), so no dilution is needed when adding or replacing SLLC in the vehicle.
- If LLC is mixed with SLLC, the interval for LLC (every 40,000 km/25,000 mile or 24 months) should be used.
- You can also apply the new maintenance interval (every 80,000 km/50,000 mile) to vehicles initially filled with LLC (red-colored), if you use SLLC (pink-colored) for the coolant change.

2. Headlight Level Control System

A headlight beam level control system is used as standard equipment on all models.

MODEL CODE

MCX20 L – A E P N K V

1 2 3 4 5 6 7 8

1	**BASIC MODEL CODE** MCX20 : With 1MZ-FE Engine
2	**STEERING WHEEL POSITION** L : Left-Hand Drive
3	**MODEL NAME** A : AVALON
4	**BODY TYPE** E : 4-Door Sedan
5	**GEAR SHIFT TYPE** P : 4-Speed Automatic, Floor
6	**GRADE** N : XL G : XLS
7	**ENGINE SPECIFICATION** K : DOHC and EFI
8	**DESTINATION** V : G.C.C. Countries

MODEL LINE-UP

DESTINATION	ENGINE	BODY TYPE	GRADE	TRANSAXLE 4-Speed Automatic A541E
G.C.C. Countries	1MZ-FE	4-Door Sedan	XL	MCX20L-AEPNKV
			XLS	MCX20L-AEPGKV

NEW FEATURES

■ HEADLIGHT LEVEL CONTROL SYSTEM

- Headlight level control system is used on all models as the standard equipment headlight system.
- This system adjusts the LO beam of the headlights adjusted in an appropriate level in accordance with the number (weight) of passengers and volume of luggage.
- When the driver operates the headlight beam level control switch, this system actuates the headlight leveling actuator that is integrated in the headlight unit, in order to change the headlight reflector angle.

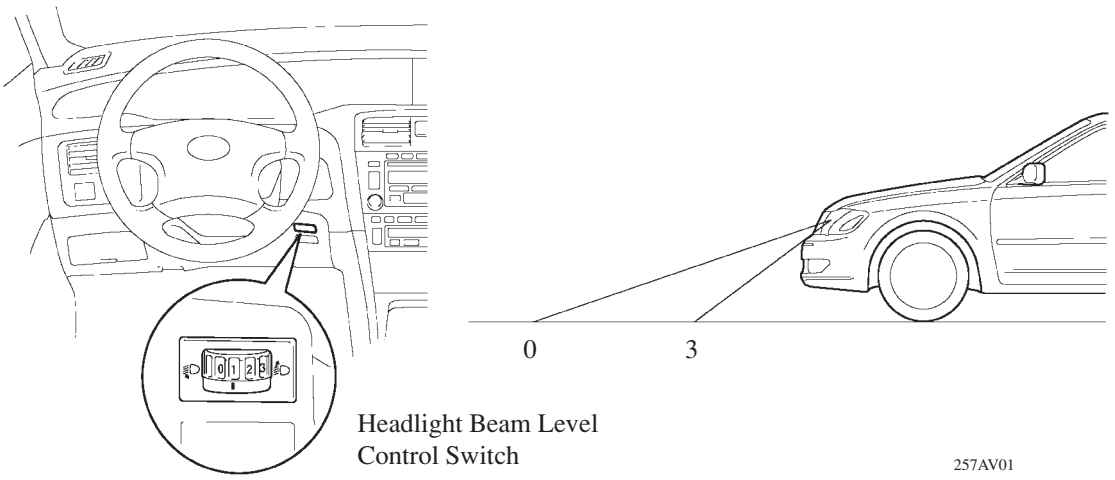

▶ Wiring Diagram ◀

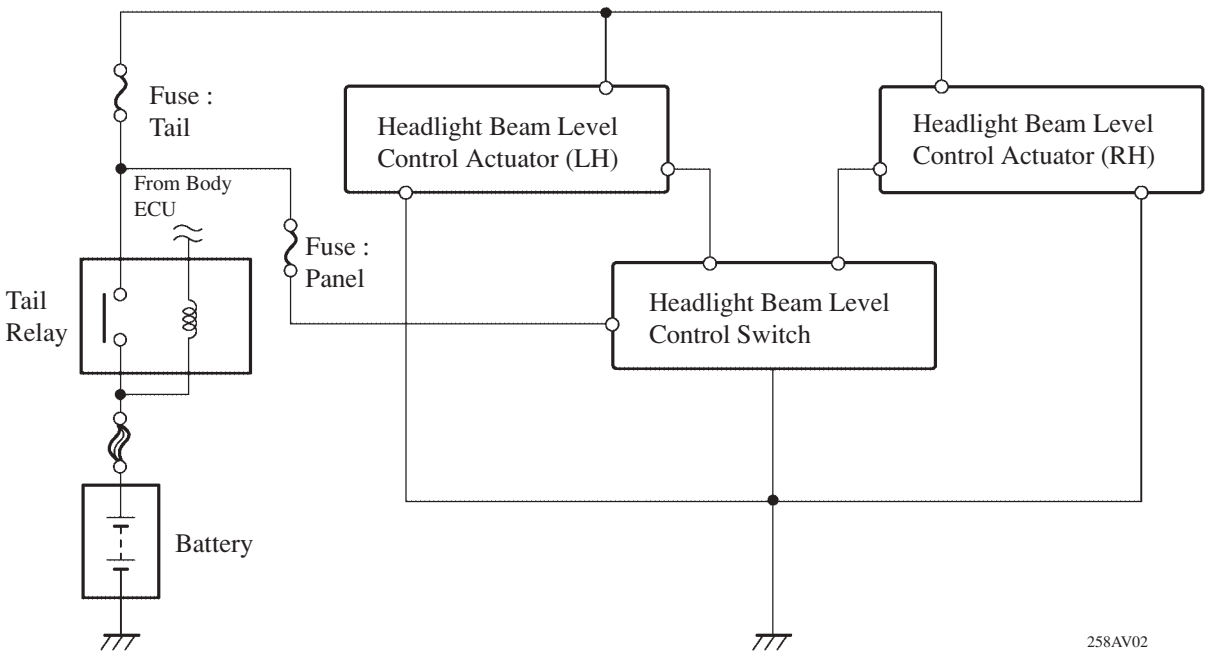

MAJOR TECHNICAL SPECIFICATIONS

Item \ Area			G.C.C. Countries	
Body Type			4-Door Sedan	
Vehicle Grade			XL	XLS
Model Code			MCX20L-AEPNKV	MCX20L-AEPGKV
Major Dimensions & Vehicle Weights	Overall	Length mm (in.)	4875 (191.9)	4875 (191.9)
		Width mm (in.)	1820 (71.7)	1820 (71.7)
		Height mm (in.)	1485 (58.5)	1485 (58.5)
	Wheel Base	mm (in.)	2720 (107.1)	2720 (107.1)
	Tread	Front mm (in.)	1540 (60.6)	1540 (60.6)
		Rear mm (in.)	1510 (59.4)	1510 (59.4)
	Room	Length mm (in.)	—	—
		Width mm (in.)	—	—
		Height mm (in.)	—	—
	Overhang	Front mm (in.)	945 (37.2)	945 (37.2)
		Rear mm (in.)	1210 (47.6)	1210 (47.6)
	Min. Running Ground Clearance	mm (in.)	130 (5.1)	130 (5.1)
	Angle of Approach	degrees	21.8°	21.8°
	Angle of Departure	degrees	17.5°	17.5°
	Curb Weight	Front kg (lb)	935 – 945 (2061 – 2083)	940 – 950 (2072 – 2094)
		Rear kg (lb)	575 – 585 (1268 – 1290)	580 – 595 (1279 – 1312)
		Total kg (lb)	1510 – 1530 (3329 – 3373)	1520 – 1545 (3351 – 3406)
	Gross Vehicle Weight	Front kg (lb)	—	—
		Rear kg (lb)	—	—
		Total kg (lb)	1955 (4310)	1955 (4310)
	Fuel Tank Capacity	ℓ (Imp.gal.)	70 (15.4)	70 (15.4)
	Luggage Compartment Capacity	m^3 (cu.ft.)	0.45 (15.9)	0.45 (15.9)
Performance	Max. Speed	km / h (mph)	—	—
	Max. Cruising Speed	km / h (mph)	—	—
	Acceleration	0 to 100 km / h sec.	—	—
		0 to 400 m sec.	—	—
	Max. Permissible Speed	1st Gear km / h (mph)	70 (43)	70 (43)
		2nd Gear km / h (mph)	128 (79)	128 (79)
		3rd Gear km / h (mph)	—	—
		4th Gear km / h (mph)	—	—
	Min. Turning Radius	Tire m (ft.)	11.5 (37.6)	11.5 (37.6)
		Body m (ft.)	12.1 (39.7)	12.1 (39.7)
Engine	Engine Type		1MZ-FE	1MZ-FE
	Valve Mechanism		24-Valve, DOHC	24-Valve, DOHC
	Bore x Stroke	mm (in.)	87.5 x 83.0 (3.44 x 3.27)	87.5 x 83.0 (3.44 x 3.27)
	Displacement	cm^3 (cu.in.)	2995 (182.7)	2995 (182.7)
	Compression Ratio		10.5 : 1	10.5 : 1
	Fuel System		EFI	EFI
	Research Octane No. or Cetane No. (Diesel)		95 or more	95 or more
	Max. Output (SAE-NET)	kW / rpm	145 / 5200	145 / 5200
	Max. Torque (SAE-NET)	N·m / rpm	284 / 4400	284 / 4400
Engine Electrical	Battery Capacity (5HR)	Voltage & Amp. hr.	12-48	12-48
	Alternator Output	Watts	960	960
	Starter Output	kW	1.2	1.2
Chassis	Clutch Type		—	—
	Transaxle Type		A541E	A541E
	Transmission Gear Ratio	In First	2.810	2.810
		In Second	1.549	1.549
		In Third	1.000	1.000
		In Fourth	0.735	0.735
		In Fifth	—	—
		In Reverse	2.296	2.296
	Counter Gear Ratio		0.945	—
	Differential Gear Ratio (Final)		3.933	3.933
	Brake Type	Front	Ventilated Disc	Ventilated Disc
		Rear	Solid Disc	Solid Disc
	Parking Brake Type		Duo Servo Drum	Duo Servo Drum
	Brake Booster Type and Size	in.	Single, 10.5"	Single, 10.5"
	Proportioning Valve Type		—	—
	Suspension Type	Front	MacPherson Strut	MacPherson Strut
		Rear	MacPherson Strut	MacPherson Strut
	Stabilizer Bar	Front	Standard	Standard
		Rear	Standard	Standard
	Steering Gear Type		Rack and Pinion	Rack and Pinion
	Steering Gear Ratio (Overall)		17.4	17.4
	Power Steering Type		Integral Type	Integral Type

– MEMO –

CAMRY

OUTLINE OF NEW FEATURES

The following changes have been made for the new camry.

1. 1AZ-FE and 2AZ-FE Engine

- The fuel tank cap has been changed from the quick-turn type to quick turn & ratchet construction type.
- The TOYOTA genuine Super Long Life Coolant (SLLC) has been adopted. As result, the maintenance interval has been extended.
- A segment conductor type alternator has been adopted.

2. 1MZ-FE Engine

- The TOYOTA genuine Super Long Life Coolant (SLLC) has been adopted. As result, the maintenance interval has been extended.
- The fuel tank cap has been changed from the quick-turn type to quick turn & ratchet construction type.
- A segment conductor type alternator has been adopted.

3. Clutch

The clutch accumulator has been added.

4. Impact Absorbing Structure

Reinforcements have been added to the via pillar reinforcements, side impact protection beams, and floor cross members in order to strengthen the vehicle against side collision.

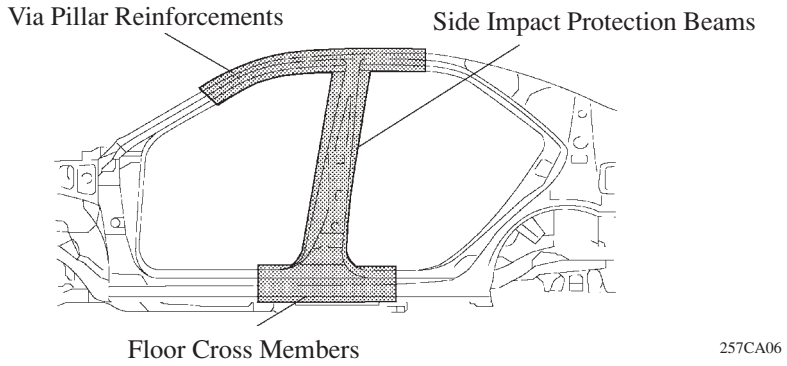

MODEL CODE

ACV30 L – A E M N K W

1 2 3 4 5 6 7 8

	BASIC MODEL CODE
1	ACV30 : With 2AZ-FE Engine ACV31 : With 1AZ-FE Engine MCV30 : With 1MZ-FE Engine

	STEERING WHEEL POSITION
2	L : Left-Hand Drive R : Right-Hand Drive

	MODEL NAME
3	A : Camry

	BODY TYPE
4	E : 4-Door Sedan

	GEAR SHIFT TYPE
5	M : 5-Speed Manual P : 4-Speed Automatic

	GRADE
6	N : GL G : GX

	ENGINE SPECIFICATION
7	K : DOHC and EFI

	DESTINATION
8	W : Europe

MODEL LINE-UP

DESTINATION	ENGINE	BODY TYPE	GRADE	TRANSAXLE		
				5-Speed Manual	4-Speed Automatic	
				E354	U241E	U140E
Europe	1AZ-FE	4-Door Sedan	GL	—	ACV31L-AEPNKW ACV31R-AEPNKW	—
	2AZ-FE			ACV30L-AEMNKW ACV30R-AEMNKW	ACV30L-AEPNKW ACV30R-AEPNKW	—
	1MZ-FE		GX	—	—	MCV30L-AEPGKW MCV30R-AEPGKW

NEW FEATURES

■ 1AZ-FE AND 2AZ-FE ENGINE

1. Cooling System

The TOYOTA genuine Super Long Life Coolant (SLLC) has been adopted. As result, the maintenance interval has been extended.

▶ Specifications ◀

Model			New	Previous
Engine Coolant	Capacity litter (US qts, Imp. qts)		6.2 (6.6, 5.4)	←
	Type		TOYOTA Genuine (SLLC)	TOYOTA Genuine (LLC)
	Color		Pink	Red
	Maintenance Intervals	First time	160,000 km (100,000 mile)	60,000 km (37,500 mile)
		Subsequent	Every 80,000 km (50,000 mile)	Every 30,000 km (18,000 mile)
Thermostat	Operating Temperature °C (°F)		80 – 84 (176 – 183)	←

- SLLC is pre-mixed (50% coolant and 50% distilled water), so no dilution is needed when adding or replacing SLLC in the vehicle.
- If LLC is mixed with SLLC, the interval for LLC (every 30,000 km/18,000 mile or 24 months) should be used.
- You can also apply the new maintenance interval (every 80,000 km/50,000 mile) to vehicles initially filled with LLC (red-colored), if you use SLLC (pink-colored) for the coolant change.

2. Charging System

A compact and lightweight Segment Conductor type alternator that generates high amperage output in a highly efficient manner has been adopted on optional equipment.

▶ Component of Segment Conductor Type Alternator ◀

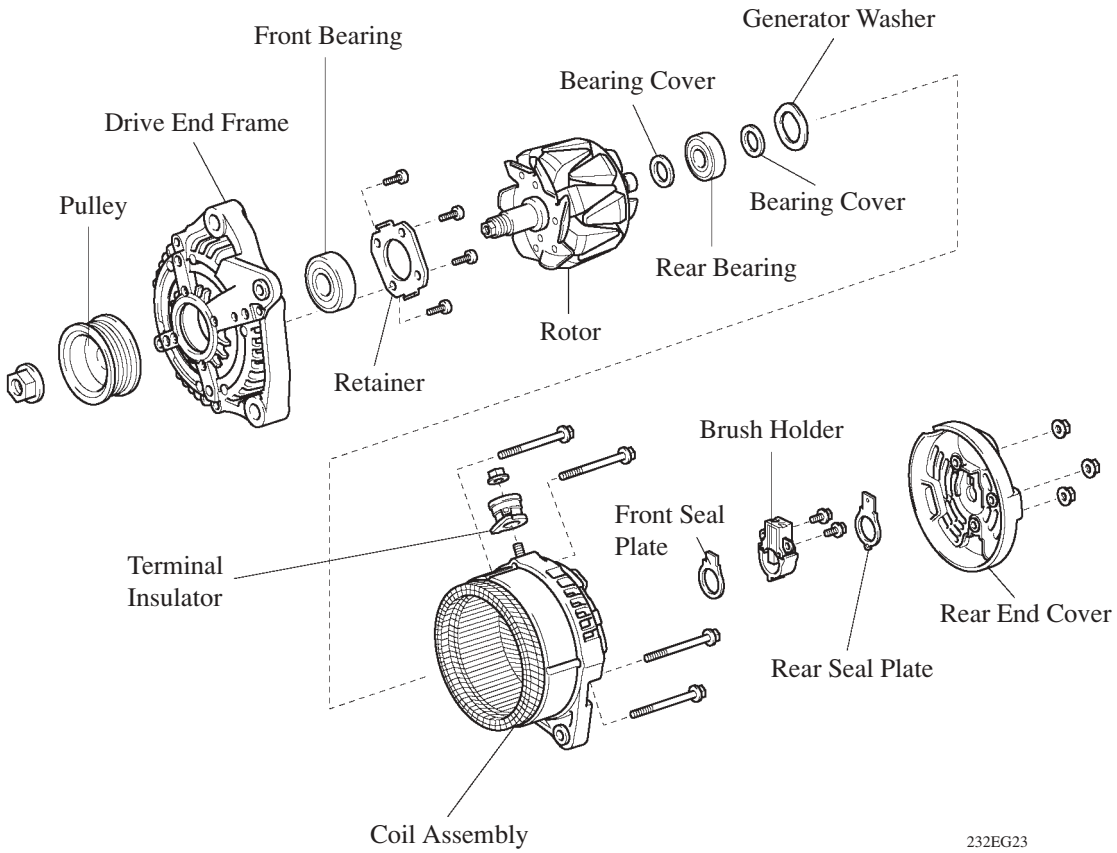

▶ Wiring Diagram ◀

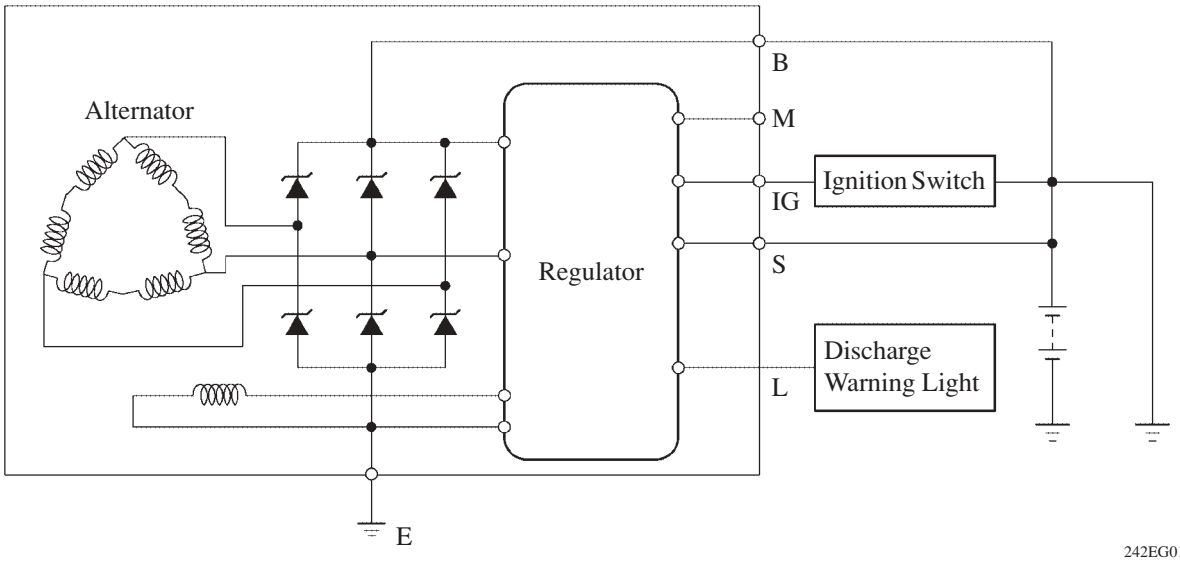

Construction and Operation

This alternator has a joined segment conductor system, in which multiple segment conductors are welded together to form the stator. Compared to the conventional winding system, the electrical resistance is reduced due to the shape of the segment conductors, and their arrangement helps to make the alternator more compact.

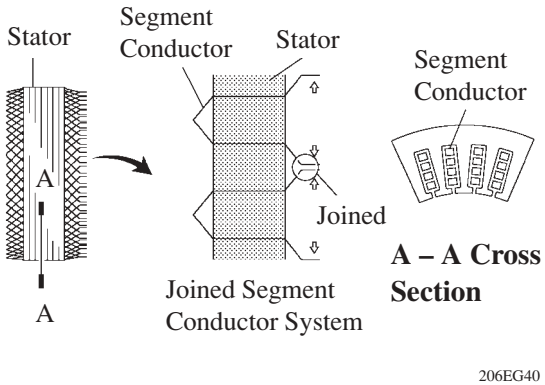

Segment Conductor Type Alternator

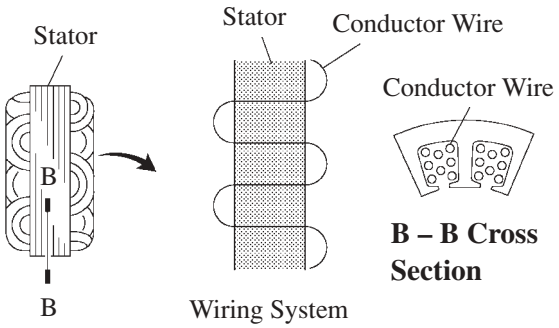

Conventional Type Alternator

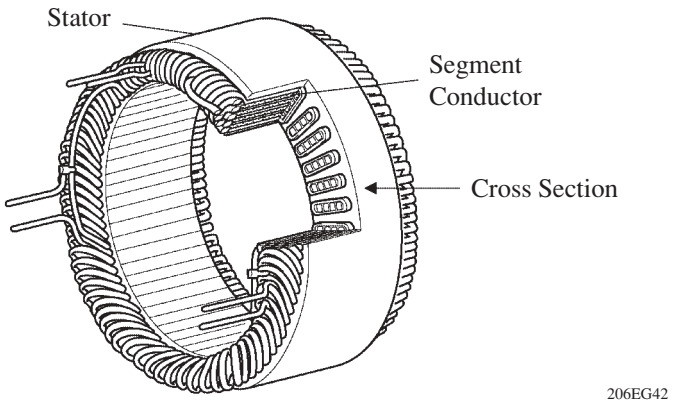

Stator of Segment Conductor Type Alternator

■ 1MZ-FE ENGINE

1. Cooling System

The TOYOTA genuine Super Long Life Coolant (SLLC) has been adopted. As result, the maintenance interval has been extended.
Refer to the cooling system on page 10 of the 1AZ-FE engine for the type, color, and the maintenance interval for the coolant.

▶ Specifications ◀

Model		New	Previous
Engine Coolant	Capacity litter (US qts, Imp. qts)	9.2 (9.7, 8.1)	9.2 (9.7, 8.1)

2. Charging System

For details, see page 10 in 1AZ-FE and 2AZ-FE engine section.

■ CLUTCH

The clutch accumulator has been installed between the clutch master cylinder and the clutch release cylinder to absorb vibration of the clutch fluid and realize better quietness.

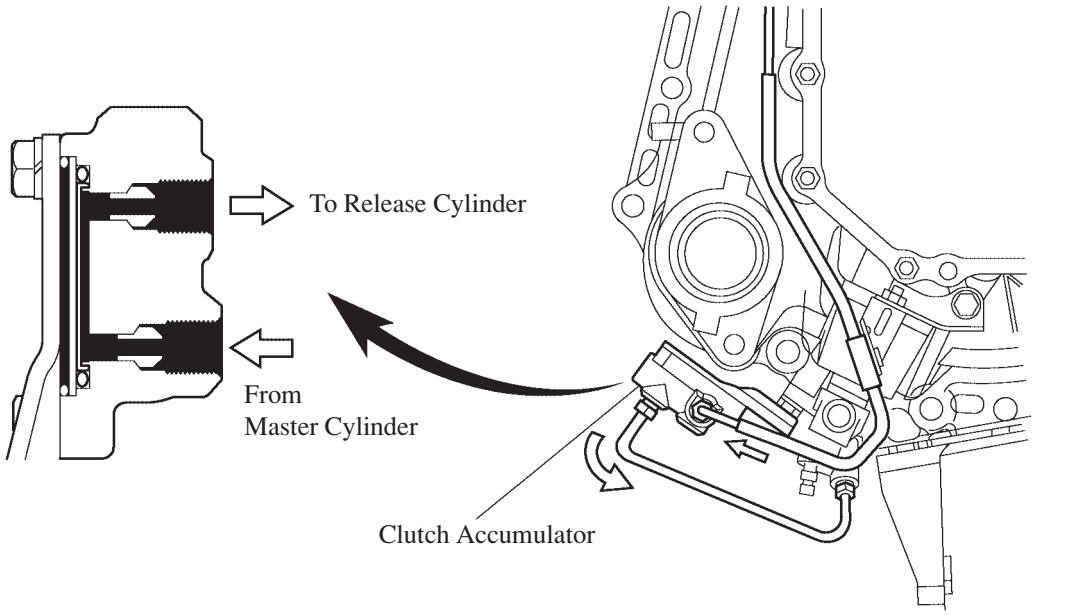

– MEMO –

MAJOR TECHNICAL SPECIFICATIONS

Item \ Area				Europe			
Body Type				4-Door Sedan			
Vehicle Grade				GL			
Model Code				ACV30L-AEMNKW	ACV30R-AEMNKW	ACV30L-AEPNKW	ACV30R-AEPNKW
Major Dimensions & Vehicle Weights	Overall	Length	mm (in.)	4805 (189.2)	4805 (189.2)	4805 (189.2)	4805 (189.2)
		Width	mm (in.)	1795 (70.7)	1795 (70.7)	1795 (70.7)	1795 (70.7)
		Height	mm (in.)	1490 (58.7)*1, 1505 (59.3)*2, 1500 (59.1)*3, 1515 (59.6)*4	1490 (58.7)*1, 1505 (59.3)*2, 1500 (59.1)*3, 1515 (59.6)*4	1490 (58.7)*1, 1505 (59.3)*2, 1500 (59.1)*3, 1515 (59.6)*4	1490 (58.7)*1, 1505 (59.3)*2, 1500 (59.1)*3, 1515 (59.6)*4
	Wheel Base		mm (in.)	2720 (107.1)	2720 (107.1)	2720 (107.1)	2720 (107.1)
	Tread	Front	mm (in.)	1545 (60.8)	1545 (60.8)	1545 (60.8)	1545 (60.8)
		Rear	mm (in.)	1535 (60.4)	1535 (60.4)	1535 (60.4)	1535 (60.4)
	Room	Length	mm (in.)	1870 (73.6)	1870 (73.6)	1870 (73.6)	1870 (73.6)
		Width	mm (in.)	1515 (59.6)	1515 (59.6)	1515 (59.6)	1515 (59.6)
		Height	mm (in.)	1190 (46.9)	1190 (46.9)	1190 (46.9)	1190 (46.9)
	Overhang	Front	mm (in.)	950 (37.4)	950 (37.4)	950 (37.4)	950 (37.4)
		Rear	mm (in.)	1145 (45.1)	1145 (45.1)	1145 (45.1)	1145 (45.1)
	Min. Running Ground Clearance		mm (in.)	150 (5.9)*1, 165 (6.5)*2	150 (5.9)*1, 165 (6.5)*2	150 (5.9)*1, 165 (6.5)*2	150 (5.9)*1, 165 (6.5)*2
	Angle of Approach		degrees	15.2°	15.2°	15.2°	15.2°
	Angle of Departure		degrees	16.6°	16.6°	16.6°	16.6°
	Curb Weight	Front	kg (lb)	870 (1918)	870 (1918)	895 (1973)	895 (1973)
		Rear	kg (lb)	600 (1323)	600 (1323)	595 (1312)	595 (1312)
		Total	kg (lb)	1470 (3241)	1470 (3241)	1490 (3285)	1490 (3285)
	Gross Vehicle Weight	Front	kg (lb)	1000 (2205)	1000 (2205)	1000 (2205)	1000 (2205)
		Rear	kg (lb)	935 (2061)	935 (2061)	935 (2061)	935 (2061)
		Total	kg (lb)	1935 (4266)	1935 (4266)	1935 (4266)	1935 (4266)
	Fuel Tank Capacity		ℓ (Imp.gal.)	70 (15.4)	70 (15.4)	70 (15.4)	70 (15.4)
	Luggage Compartment Capacity		m³ (cu.ft.)	14.1 (497.9)	14.1 (497.9)	14.1 (497.9)	14.1 (497.9)
Performance	Max. Speed		km / h (mph)	210 (130)	210 (130)	200 (124)	200 (124)
	Max. Cruising Speed		km / h (mph)	—	—	—	—
	Acceleration	0 to 100 km / h	sec.	9.4	9.4	10.5	10.5
		0 to 400 m	sec.	16.5	16.5	17.2	17.2
	Max. Permissible Speed	1st Gear	km / h (mph)	52 (32)*5, 53 (37)*6	52 (32)*5, 53 (37)*6	64 (40)	64 (40)
		2nd Gear	km / h (mph)	89 (55)*5, 92 (57)*6	89 (55)*5, 92 (57)*6	115 (71)	115 (71)
		3rd Gear	km / h (mph)	137 (85)*5, 141 (88)*6	137 (85)*5, 141 (88)*6	—	—
		4th Gear	km / h (mph)	178 (111)*5, 183 (114)*6	178 (111)*5, 183 (114)*6	—	—
	Min. Turning Radius	Tire	m (ft.)	5.3 (17.4)*5, 5.6 (19.7)*6	5.3 (17.4)*5, 5.6 (19.7)*6	5.3 (17.4)*5, 5.6 (19.7)*6	5.3 (17.4)*5, 5.6 (19.7)*6
		Body	m (ft.)	5.7 (18.7)*5, 6.0 (19.7)*6	5.7 (18.7)*5, 6.0 (19.7)*6	5.7 (18.7)*5, 6.0 (19.7)*6	5.7 (18.7)*5, 6.0 (19.7)*6
Engine	Engine Type			2AZ-FE	2AZ-FE	2AZ-FE	2AZ-FE
	Valve Mechanism			16-Valve, DOHC	16-Valve, DOHC	16-Valve, DOHC	16-Valve, DOHC
	Bore x Stroke		mm (in.)	88.5 x 96.0 (3.48 x 3.78)	88.5 x 96.0 (3.48 x 3.78)	88.5 x 96.0 (3.48 x 3.78)	88.5 x 96.0 (3.48 x 3.78)
	Displacement		cm³ (cu.in.)	2362 (144.2)	2362 (144.2)	2362 (144.2)	2362 (144.2)
	Compression Ratio			9.6 : 1	9.6 : 1	9.6 : 1	9.6 : 1
	Fuel System			EFI	EFI	EFI	EFI
	Research Octane Number			95 or higher	95 or higher	95 or higher	95 or higher
	Max. Output (EEC)		kW / rpm	115 / 5600	115 / 5600	115 / 5600	115 / 5600
	Max. Torque (EEC)		N·m / rpm	221 / 4000	221 / 4000	221 / 4000	221 / 4000
Engine Electrical	Battery Capacity (5HR)		Voltage & Amp. hr.	12-48*7, 12-55*8	12-48*7, 12-55*8	12-48*7, 12-55*8	12-48*7, 12-55*8
	Alternator Output		Watts	960	960	960	960
	Starter Output		kW	1.6	1.6	1.6	1.6
Chassis	Clutch Type			Dry Single Plate, Diaphragm	Dry Single Plate, Diaphragm	—	—
	Transaxle Type			E354	E354	U241E	U241E
	Transmission Gear Ratio	In First		3.538	3.538	3.943	3.943
		In Second		2.045	2.045	2.197	2.197
		In Third		1.333	1.333	1.413	1.413
		In Fourth		1.028	1.028	1.020	1.020
		In Fifth		0.820	0.820	—	—
		In Reverse		3.583	3.583	3.145	3.145
	Counter Gear Ratio			—	—	—	—
	Differential Gear Ratio (Final)			3.944	3.944	2.740	2.740
	Brake Type	Front		Ventilated Disc	Ventilated Disc	Ventilated Disc	Ventilated Disc
		Rear		Solid Disc	Solid Disc	Solid Disc	Solid Disc
	Parking Brake Type			Duo-Servo	Duo-Servo	Duo-Servo	Duo-Servo
	Brake Booster Type and Size		in.	Tandem 10.5"	Tandem 7.5"+ 7.5"	Tandem 10.5"	Tandem 7.5"+ 7.5"
	Proportioning Valve Type			—	—	—	—
	Suspension Type	Front		MacPherson Strut	MacPherson Strut	MacPherson Strut	MacPherson Strut
		Rear		MacPherson Strut	MacPherson Strut	MacPherson Strut	MacPherson Strut
	Stabilizer Bar	Front		Standard	Standard	Standard	Standard
		Rear		Standard	Standard	Standard	Standard
	Steering Gear Type			Rack & Pinion	Rack & Pinion	Rack & Pinion	Rack & Pinion
	Steering Gear Ratio (Overall)			17.4 : 1	17.4 : 1	17.4 : 1	17.4 : 1
	Power Steering Type			Integral Type	Integral Type	Integral Type	Integral Type

*1: Standard height model with 205/65/R15 Tire
*2: Toller model with 205/65/R15 Tire
*3: Standard height model with 215/60/R16 Tire
*4: Toller model with 215/60/R16 Tire
*5: With 205/65/R15 Tire
*6: With 215/60/R16 Tire
*7: Set Option without Cold Area Spec.
*8: Set Option with Cold Area Spec.

Europe		General Countries	
4-Door Sedan			
GX		GL	
MCV30L-AEPGKW	MCV30R-AEPGKW	ACV31L-AEPNKW	ACV31R-AEPNKW
4805 (189.2)	4805 (189.2)	4805 (189.2)	4805 (189.2)
1795 (70.7)	1795 (70.7)	1795 (70.7)	1795 (70.7)
1490 (58.7)*1, 1505 (59.3)*2, 1500 (59.1)*3, 1515 (59.6)*4	1490 (58.7)*1, 1505 (59.3)*2, 1500 (59.1)*3, 1515 (59.6)*4	1505 (59.3)*5, 1515 (59.6)*6	1490 (58.7)*5, 1500 (59.1)*6
2720 (107.1)	2720 (107.1)	2720 (107.1)	2720 (107.1)
1545 (60.8)	1545 (60.8)	1545 (60.8)	1545 (60.8)
1535 (60.4)	1535 (60.4)	1535 (60.4)	1535 (60.4)
1870 (73.6)	1870 (73.6)	1870 (73.6)	1870 (73.6)
1515 (59.6)	1515 (59.6)	1515 (59.6)	1515 (59.6)
1190 (46.9)	1190 (46.9)	1190 (46.9)	1190 (46.9)
950 (37.4)	950 (37.4)	950 (37.4)	950 (37.4)
1145 (45.1)	1145 (45.1)	1145 (45.1)	1145 (45.1)
150 (5.9)*1, 165 (6.5)*2	150 (5.9)*1, 165 (6.5)*2	150 (5.9)*1, 165 (6.5)*2	150 (5.9)*1, 165 (6.5)*2
15.2°	15.2°	15.2°	15.2°
16.6°	16.6°	16.6°	16.6°
970 (2138)	970 (2138)	885 (1951)	885 (1951)
600 (1323)	600 (1323)	585 (1290)	585 (1290)
1570 (3461)	1570 (3461)	1470 (3241)	1470 (3241)
1075 (2370)	1075 (2370)	1000 (2205)	1000 (2205)
940 (2072)	940 (2072)	935 (2061)	935 (2061)
2015 (4442)	2015 (4442)	1935 (4266)	1935 (4266)
70 (15.4)	70 (15.4)	70 (15.4)	70 (15.4)
14.1 (497.9)	14.1 (497.9)	14.1 (497.9)	14.1 (497.9)
225 (139.8)	225 (139.8)	188 (116.8)	188 (116.8)
—	—	—	—
9.1	9.1	—	—
16.4	16.4	18.2	18.2
64 (40)	64 (40)	59 (37)	59 (37)
116 (72)	116 (72)	106 (66)	106 (66)
—	—	—	—
—	—	—	—
5.6 (18.4)	5.6 (18.4)	5.3 (17.4)	5.3 (17.4)
6.0 (19.7)	6.0 (19.7)	5.7 (18.7)	5.7 (18.7)
1MZ-FE	1MZ-FE	1AZ-FE	1AZ-FE
24-Valve, DOHC	24-Valve, DOHC	16-Valve, DOHC	16-Valve, DOHC
87.5 x 83.0 (3.44 x 3.27)	87.5 x 83.0 (3.44 x 3.27)	86.0 x 86.0 (3.39 x 3.39)	86.0 x 86.0 (3.39 x 3.39)
2,995 (182.8)	2,995 (182.8)	1,998 (122.1)	1,998 (122.1)
10.5 : 1	10.5 : 1	9.8 : 1	9.8 : 1
EFI	EFI	EFI	EFI
95 or higher	95 or higher	95 or higher	95 or higher
139 / 5,300	139 / 5,300	110 / 6,000	110 / 6,000
274 / 4,400	274 / 4,400	192 / 4,000	192 / 4,000
12-48*7, 12-55*8	12-48*7, 12-55*8	12-55	12-48 (12-55)*1
1200	1200	960	960
1.6	1.6	1.6	1.6
—	—	—	—
U140E	U140E	U241E	U241E
3.938	3.938	3.943	3.943
2.194	2.194	2.197	2.197
1.411	1.411	1.413	1.413
1.019	1.019	1.020	1.020
—	—	—	—
3.141	3.141	3.145	3.145
—	—	—	—
2.814	2.814	3.120	3.120
Ventilated Disc	Ventilated Disc	Ventilated Disc	Ventilated Disc
Solid Disc	Solid Disc	Solid Disc	Solid Disc
Duo-Servo	Duo-Servo	Duo-Servo	Duo-Servo
Tandem 10.5”	Tandem 7.5”+ 7.5”	Tandem 10.5”	Tandem 7.5”+ 7.5”
—	—	—	—
MacPherson Strut	MacPherson Strut	MacPherson Strut	MacPherson Strut
MacPherson Strut	MacPherson Strut	MacPherson Strut	MacPherson Strut
Standard	Standard	Standard	Standard
Standard	Standard	Standard	Standard
Rack & Pinion	Rack & Pinion	Rack & Pinion	Rack & Pinion
17.4 : 1	17.4 : 1	17.4 : 1	17.4 : 1
Integral Type	Integral Type	Integral Type	Integral Type

*1: Standard height model with 205 / 65 / R15 Tire
*2: Toller model with 205/65/R15 Tire
*3: Standard height model with 215/60/R16 Tire
*4: Toller model with 215 / 60 / R16 Tire
*5: With 205 / 65 / R15 Tire
*6: With 215 / 60 / R16 Tire
*7: Set Option without Cold Area Spec.
*8: Set Option with Cold Area Spec.

– MEMO –

AVENSIS

OUTLINE OF NEW FEATURES

The following changes are made for the new AVENSIS.

1. Model Line-up

The following 12 models have been made newly available for Europe:

Body Type	Grade	Engine	
		2AZ-FSE	1CD-FTV
Sedan	Mid Technical	AZT251L-AEAEHW	—
		—	CDT250R-AEMEXW
		—	CDT250L-AEMEXW
	Mid Elegant	AZT251R-AEAGHW	—
		AZT251L-AEAGHW	—
		—	CDT250R-AEMGXW
		—	CDT250L-AEMGXW
Lift Back	Mid Technical	AZT251L-ALAEHW	—
	Mid Elegant	AZT251R-ALAGHW	—
		AZT251L-ALAGHW	—
Wagon	Mid Technical	AZT251L-AWAEHW	—
	Mid Elegant	AZT251L-AWAGHW	—

2. All Engines

The TOYOTA genuine super long life coolant (SLLC) has been adopted. As a result, the maintenance interval has been extended.

3. 2AZ-FSE Engine

- The 2AZ-FSE engine has been newly introduced on the models for Europe.
- A balance shaft has been adopted in order to reduce vibration and noise.
- An oil cooler has been adopted.

4. 1CD-FTV Engine

- The D-CAT (Diesel Clean Advanced Technology) has been adopted on the models for Germany and England.
- The D-CAT simultaneously reduces the harmful PM (Particulate Matter) and NOx (Nitric Oxide) that are emitted by the diesel engine.

5. U151E Automatic Transaxle

- A U151E 5-speed automatic transaxle has been adopted on the 2AZ-FSE engine.
- An automatic transaxle fluid warmer has been adopted.

MODEL CODE

ZZT250 L – A E M N K W

1 2 3 4 5 6 7 8

1	BASIC MODEL CODE
	ZZT250 : With 3ZZ-FE Engine ZZT251 : With 1ZZ-FE Engine AZT250 : With 1AZ-FSE Engine : With 1AZ-FE Engine AZT251 : With 2AZ-FSE Engine CDT250 : With 1CD-FTV Engine

2	STEERING WHEEL POSITION
	L : Left-Hand Drive R : Right-Hand Drive

3	MODEL NAME
	A: AVENSIS

4	BODY TYPE
	E : 4-Door Sedan L : 5-Door Liftback W : 5-Door Wagon

5	GEAR SHIFT TYPE
	M : 5-Speed Manual, Floor P : 4-Speed Automatic, Floor A : 5-Speed Automatic, Floor

6	GRADE
	N : ENTRY E : MID TECHNICAL G : MID ELEGANT

7	ENGINE SPECIFICATION
	H : DOHC EFI and Direct Injection K : Compact DOHC and EFI Y : Common-Rail Diesel X : Common-Rail Diesel and D-CAT System

8	DESTINATION
	W : Europe Blank : General countries

MODEL LINE-UP

Europe, General Countries

: New

ENGINE	BODY TYPE	GRADE	5-Speed Manual Transaxle			
			C50	C250	E354	E357
3ZZ-FE	Sedan	ENTRY	ZZT250L(R)-AEMNKW	—	—	—
		MID TECHNICAL	ZZT250L-AEMEKW	—	—	—
		MID ELEGANT	ZZT250L-AEMGKW	—	—	—
	Liftback	ENTRY	ZZT250L(R)-ALMNKW	—	—	—
	Wagon	ENTRY	ZZT250L-AWMNKW	—	—	—
1ZZ-FE	Sedan	ENTRY	—	ZZT251L(R)-AEMNKW	—	—
		MID TECHNICAL	—	ZZT251L(R)-AEMEKW	—	—
		MID ELEGANTL	—	ZZT251L(R)-AEMGKW	—	—
	Liftback	ENTRY	—	ZZT251L(R)-ALMNKW	—	—
		MID TECHNICAL	—	ZZT251L(R)-ALMEKW	—	—
		MID ELEGANT	—	ZZT251L(R)-ALMGKW	—	—
	Wagon	ENTRY	—	ZZT251L(R)-AWMNKW	—	—
		MID TECHNICAL	—	ZZT251L(R)-AWMEKW	—	—
		MID ELEGANT	—	ZZT251L(R)-AWMGKW	—	—
1AZ-FE	Sedan	ENTRY	—	—	AZT250L-AEMNK	—
1AZ-FE (Unleaded)	Sedan	MID TECHNICAL	—	—	AZT250L-AEMEKW	—
		MID ELEGANT	—	—	AZT250L-AEMGKW	—
1AZ-FSE	Sedan	MID TECHNICAL	—	—	AZT250L(R)-AEMEHW	—
		MID ELEGANT	—	—	AZT250L(R)-AEMGHW	—
	Liftback	MID TECHNICAL	—	—	AZT250L(R)-ALMEHW	—
		MID ELEGANT	—	—	AZT250L(R)-ALMGHW	—
	Wagon	MID TECHNICAL	—	—	AZT250L(R)-AWMEHW	—
		MID ELEGANT	—	—	AZT250L(R)-AWMGHW	—
1CD-FTV	Sedan	ENTRY	—	—	—	CDT250L(R)-AEMNYW
		MID TECHNICAL	—	—	—	CDT250L(R)-AEMEYW
		MID ELEGANT	—	—	—	CDT250L(R)-AEMGYW
	Liftback	ENTRY	—	—	—	CDT250L(R)-ALMNYW
		MID TECHNICAL	—	—	—	CDT250L(R)-ALMEYW
		MID ELEGANT	—	—	—	CDT250L(R)-ALMGYW
	Wagon	ENTRY	—	—	—	CDT250L(R)-AWMNYW
		MID TECHNICAL	—	—	—	CDT250L-AWMEYW
		MID ELEGANT	—	—	—	CDT250L-AWMGYW
1CD-FTV (D-CAT)	Sedan	MID TECHNICAL	—	—	—	CDT250L(R)-AEMEXW
		MID ELEGANT	—	—	—	CDT250L(R)-AEMGXW

Europe, General Countries

: New

ENGINE	BODY TYPE	GRADE	4-Speed Automatic Transaxle		5-Speed Automatic Transaxle
			U241E	U341E	U151E
1ZZ-FE	Sedan	ENTRY	—	ZZT251L(R)-AEPNKW	—
		MID TECHNICAL	—	ZZT251L(R)-AEPEKW	—
		MID ELEGANT	—	ZZT251L(R)-AEPGKW	—
	Liftback	ENTRY	—	ZZT251L(R)-ALPNKW	—
		MID TECHNICAL	—	ZZT251L(R)-ALPEKW	—
		MID ELEGANT	—	ZZT251L(R)-ALPGKW	—
	Wagon	ENTRY	—	ZZT251L-AWPNKW	—
		MID TECHNICAL	—	ZZT251L-AWPEKW	—
		MID ELEGANT	—	ZZT251L-AWPGKW	—
1AZ-FE	Sedan	ENTRY	AZT250L(R)-AEPNK	—	—
1AZ-FE (Unleaded)	Sedan	MID TECHNICAL	AZT250L-AEPEKW	—	—
		MID ELEGANT	AZT250L-AEPGKW	—	—
	Liftback	MID TECHNICAL	AZT250L-AWPEKW	—	—
		MID ELEGANT	AZT250L-AWPGKW	—	—
1AZ-FSE	Sedan	MID TECHNICAL	AZT250L(R)-AEPEHW	—	—
		MID ELEGANT	AZT250L(R)-AEPGHW	—	—
	Liftback	MID TECHNICAL	AZT250L(R)-ALPEHW	—	—
		MID ELEGANT	AZT250L(R)-ALPGHW	—	—
	Wagon	MID TECHNICAL	AZT250L(R)-AWPEHW	—	—
		MID ELEGANT	AZT250L(R)-AWPGHW	—	—
2AZ-FSE	Sedan	MID TECHNICAL	—	—	AZT251L-AEAEHW
		MID ELEGANT	—	—	AZT251L(R)-AEAGHW
	Liftback	MID TECHNICAL	—	—	AZT251L-ALAEHW
		MID ELEGANT	—	—	AZT251L(R)-ALAGHW
	Wagon	MID TECHNICAL	—	—	AZT251L-AWAEHW
		MID ELEGANT	—	—	AZT251L-AWAGHW

NEW FEATURES

■ ALL ENGINES

The TOYOTA genuine Super Long Life Coolant (SLLC) has been adopted. As a result, the maintenance interval has been extended.

▶ Specifications ◀

Model					New	Previous
Engine Coolant	Capacity Liters (US qts, Imp.qts)	1ZZ-FE	M/T	LHD	5.8 (6.1, 5.1)	←
				RHD	5.9 (6.2, 5.2)	←
			A/T	LHD	5.7 (6.0, 5.0)	←
				RHD	5.8 (6.1, 5.1)	←
		3ZZ-FE	M/T	LHD	5.8 (6.1, 5.1)	←
				RHD	5.9 (6.2, 5.2)	←
		1AZ-FE	M/T	LHD	6.0 (6.3, 5.3)	←
				RHD	6.1 (6.4, 5.4)	←
			A/T	RHD	6.4 (6.8, 5.6)	←
		1AZ-FSE	M/T	LHD	6.0 (6.3, 5.3)	←
				RHD	6.1 (6.4, 5.4)	←
			A/T	LHD	6.3 (6.7, 5.5)	←
				RHD	6.4 (6.8, 5.6)	←
		2AZ-FSE	A/T	LHD	6.3 (6.7, 5.5)	—
				RHD	6.4 (6.8, 5.6)	—
		1CD-FTV	With Heater		7.6 (8.0, 6.7)	←
			Without Heater		7.4 (7.8, 6.5)	←
	Type				TOYOTA Genuine SLLC	TOYOTA Genuine LLC
	Maintenance Intervals	First time			160,000 km (100,000 mile)	Every 40,000 km (25,000 mile) or 24 months whichever comes first
		Subsequent			Every 80000 km (50,000 mile)	
	Color				Pink	Red
Thermostat	Operating Temperature °C (°F)				80 – 84 (176 – 183)	←

- SLLC is pre-mixed (50% coolant and 50% distilled water), so no dilution is needed when adding or replacing SLLC in the vehicle.
- If LLC is mixed with SLLC, the interval for LLC (every 40,000 km/25,000 miles or 24 months) should be used.
- You can also apply the new maintenance interval (every 80,000 km/50,000 mile) to vehicles initially filled with LLC (red-colored), if you use SLLC (pink-colored) for the coolant change.

■2AZ-FSE ENGINE

1. General

The 2AZ-FSE TOYOTA D-4 (Direct Injection 4-stroke gasoline engine) is an in-line 4-cylinder, 2.4 liters, 16-valve DOHC engine.
This engine is uses direct injection system, high pressure fuel control system and VVT-i (Variable Valve Timing-intelligent) system to realize high performance, fuel economy, clean emission, low noise and low vibration. In addition, it has the ETCS-i (Electronic Throttle Control System-intelligent) to ensure excellent controllability of the vehicle.

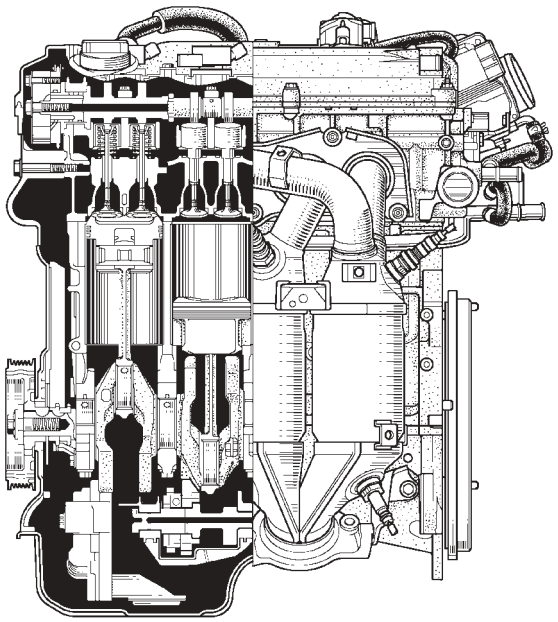

195EG86

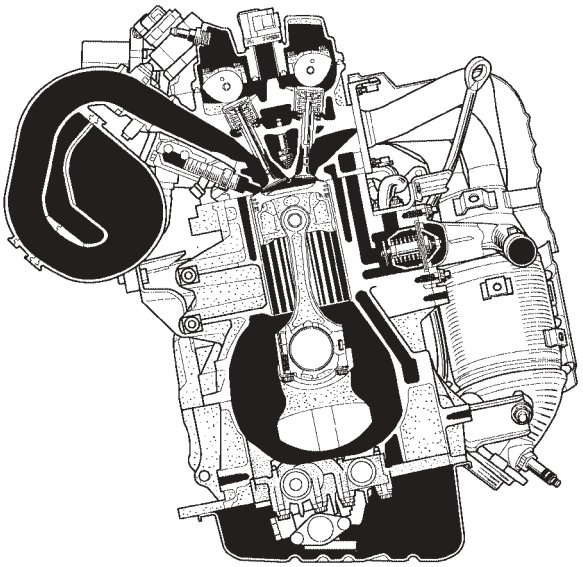

195EG09

—REFERENCE—

TOYOTA D-4 (Direct injection 4-stroke gasoline engine)

- Usual gasoline EFI engine has the injector installed on the intake port and the air and fuel injected inside the intake port is mixed and suctioned into the cylinder.
- TOYOTA D-4 has the injector installed on the combustion chamber, which injects the fuel pressurized in the fuel pump (high pressure) to the combustion chamber directly. With this, vaporized latent heat effect is obtained, then the cubic footage has been improved and the knocking limit has been expanded, resulting in the out improvement.

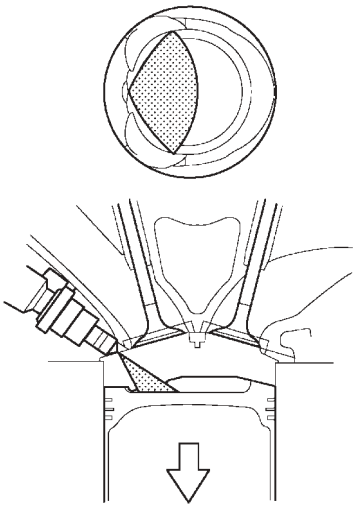

195EG85

TOYOTA D-4

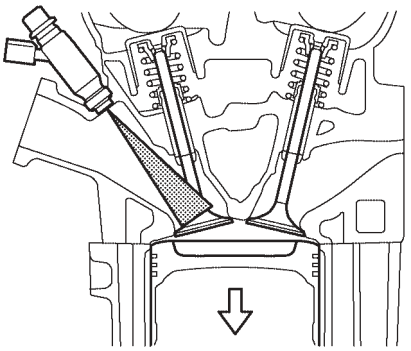

240EG109

Usual Gasoline EFI

- Depending on the driving condition, by injecting the fuel at an optimal timing in the suctioning process, equal air-fuel mixture is uniformed.
- A slit nozzle type injector precisely controls the quantity of the high pressure fuel and produces a fine-grain atomization, thus improve the fuel efficiency.

▶ Engine Specification ◀

Model			2AZ-FSE	1AZ-FSE
No. of Cyls. & Arrangement			4-Cylinder, In-line	←
Valve Mechanism			16-Valve DOHC, Chain Drive (with VVT-i)	←
Combustion Chamber			Pentroof Type	←
Manifolds			Cross-Flow	←
Fuel System			EFI D-4 (L-type)	←
Ignition System			DIS	←
Displacement	cm^3 (cu. in.)		2362	1998 (121.9)
Bore x Stroke	mm (in.)		88.5 x 96.0 (3.39 x 3.39)	86.0 x 86.0 (3.39 x 3.39)
Compression Ratio			11.0 : 1	←
Max. Output	(EEC)		120 kW @ 5800 rpm	108 kW @ 5700 rpm
Max. Torque	(EEC)		230 N·m @ 4000 rpm	196 N·m @ 4000 rpm
Valve Timing	Intake	Open	–3° ~ 44° BTDC	–12° ~ 31° BTDC
		Close	19° ~ 66° ABDC	15° ~ 58° ABDC
	Exhaust	Open	45° BBDC	←
		Close	3° ATDC	←
Firing Order			1 – 3 – 4 – 2	←
Research Octane Number			95 or higher	←
Oil Grade			API SL, EC or ILSAC	←
Emission Regulation			European STEP IV and European Cold Emission	←

▶ Performance Curve ◀

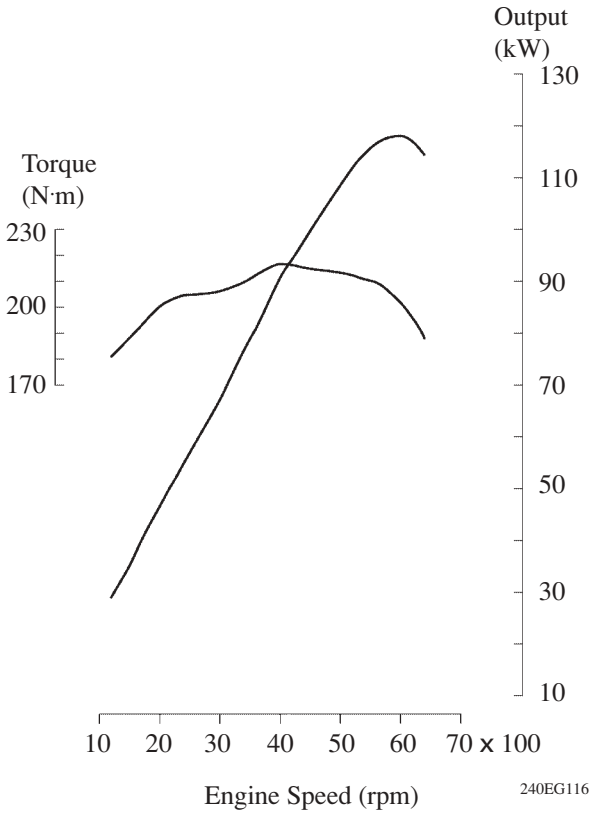

240EG116

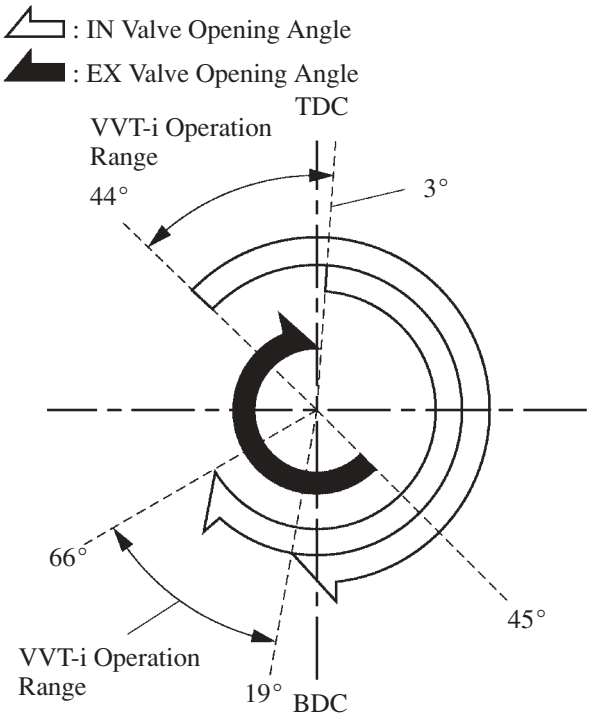

258AE123

2. Major Difference (from 1AZ-FSE Engine)

Item		Outline
Engine Proper	Cylinder Block	The cylinder bore has been changed.
	Piston	The piston diameter has been increased.
	Crankshaft	● The balance shaft drive gear has been installed onto the crankshaft. ● A balance shaft has been adopted.
Valve Mechanism		The cam profile has been changed in conjunction with the change in the valve timing.
Lubrication System		A water-cooled oil cooler has been adopted.
Intake and Exhaust system		An exhaust pipe with a double-wall pipe construction has been adopted.

3. Features of 2AZ-FSE Engine

The 2AZ-FSE engine has been able to achieve the following performance through the adoption of the items listed below.

(1) High performance and fuel economy

(2) Low noise and vibration

(3) Lightweight and compact design

(4) Good serviceability

(5) Clean emission

Item		(1)	(2)	(3)	(4)	(5)
Engine Proper	A cylinder block made of aluminum alloy along with a magnesium head cover is used.			○		
	High rigidity cylinder block is used.		○			
	Timing chain and chain tensioner are used.			○	○	
	The VVT-i system is used.	○				○
Intake And Exhaust System	Intake manifold made of plastic is used.			○		
	A dual TWC (Three-Way Catalytic Converter) and under floor Catalytic Converter for reducing exhaust emissions during engine warming is used.					○
	The intake air control system is used.	○				○
Fuel System	Direct injection is used.	○				○
	Plastic made fuel Tank has been adopted.			○		
	Quick connectors are used to connect the fuel hose with the fuel pipe.				○	
	Slit nozzle type injectors that support high-pressure fuel injection have been adopted.	○				○
Ignition System	The DIS (Direct Ignition System) makes ignition timing adjustment unnecessary.					○
	Iridium-tipped spark plugs is used.	○			○	
Starting System	The planetary reduction type starter with the interpolar magnet has been adopted.			○		

4. Engine Proper

1) Cylinder Head Cover

- A lightweight magnesium alloy diecast cylinder head cover is used.
- The fuel pump (high pressure) has been mounted on the cylinder head cover for compactness.
- Acrylic rubber, which excels in heat resistance and reliability, uses for the cylinder head cover gasket.

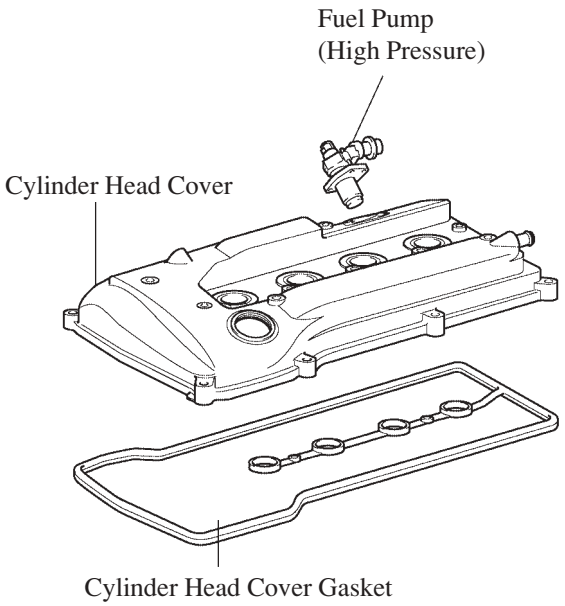

195EG10

2) Cylinder Head Gasket

- A steel-laminate type cylinder head gasket has been adopted.
- A shim is used around the cylinder bore to increase the sealing surface, thus improving the sealing performance and durability.

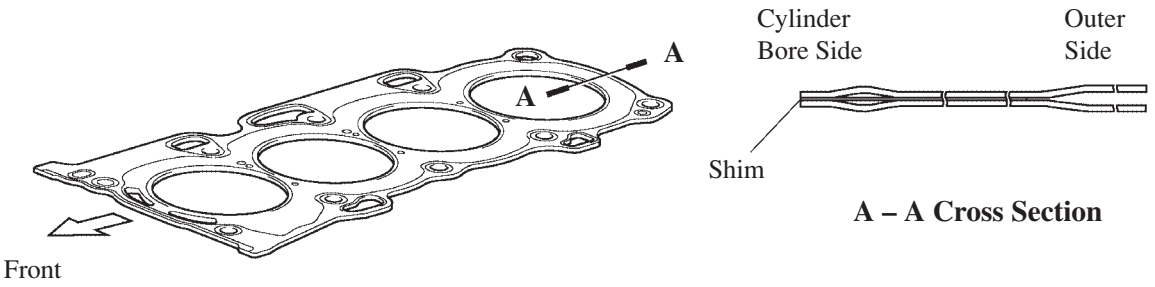

195EG11

3) Cylinder Head

- Through the adoption of the taper squish combustion chamber, the engine-knocking resistance and fuel efficiency have been improved.
- An upright intake port is used to improve the intake efficiency.
- The injectors are installed in the cylinder head.
- The routing of the water jacket in the cylinder head is optimized to improve the cooling performance. In addition, a water bypass passage has been provided below the exhaust ports to reduce the number of parts and to achieve weight reduction.
- The water outlet has been integrated to reduce the number of parts.

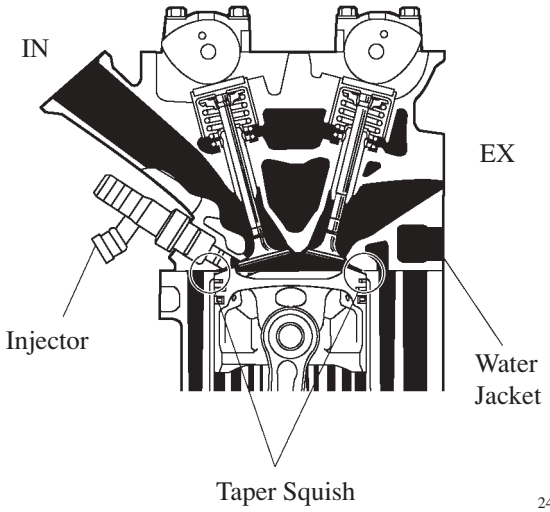

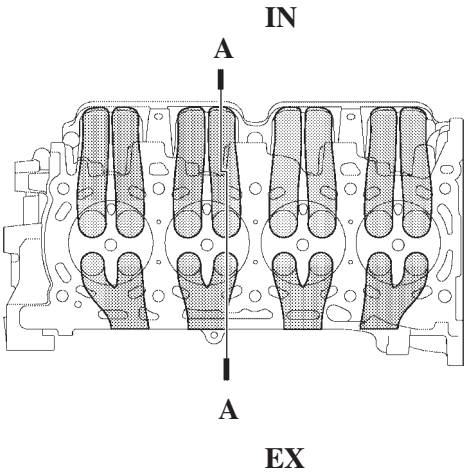

A – A Cross Section

4) Cylinder Block

- Lightweight aluminum alloy is used for the cylinder block.
- Rigidity of the cylinder block side has been improved by curving the skirt portion of the cylinder block and optimizing the rib position on the side.
- By producing the thin cast-iron liners and cylinder block as a unit, compaction is realized. This liner is thin, so that boring is not possible.
- Passage holes are provided in the crankshaft bearing area of the cylinder block. As a result, the air at the bottom of the cylinder flows smoother, and pumping loss (back pressure at the bottom of the piston generated by the piston's reciprocal movement) is reduced to improve the engine's output.
- The oil filter and the air conditioner compressor bracket are integrated the crankcase, also the water pump swirl chamber, the thermostat housing and the rear oil seal retainer integrated the cylinder block to reduce the number of parts.
- Through the adoption of the offset crankshaft, the bore center has been shifted 10 mm towards the exhaust in relation to the crankshaft center. Thus, the side force when the maximum pressure is applied has been reduced and fuel economy has been improved.
- Plastic region tightening bolts are used for tightening the crank caps.

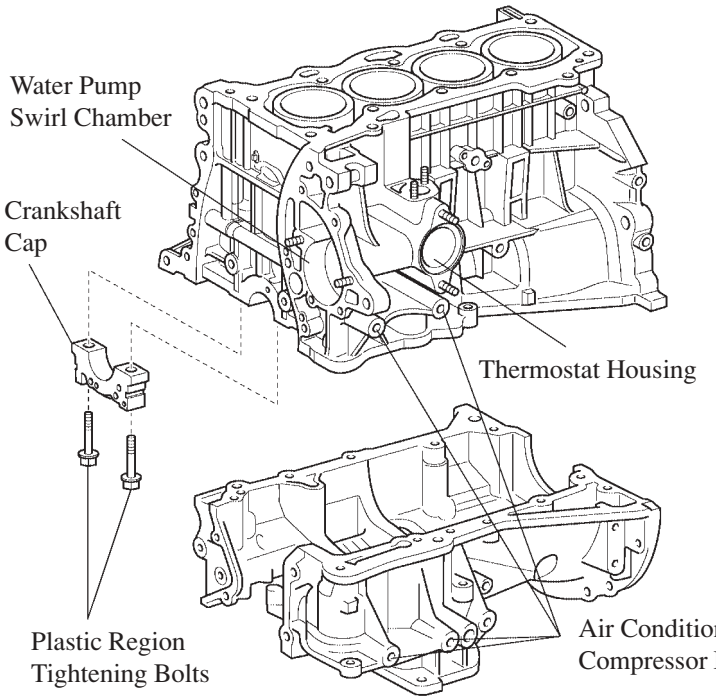

195EG14

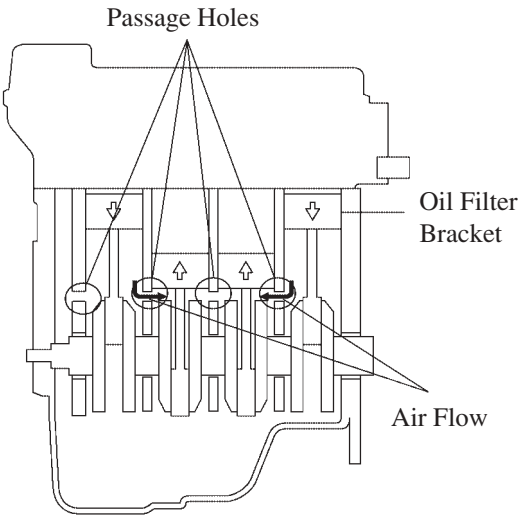

Air Flow During Engine Revolution

179EG04

5) Piston

- To achieve uniform combustion through direct injection, an optimal piston head shape that promotes the mixing of the injected fuel and intake air has been adopted.
- The piston is made of aluminum alloy and skirt area is made compact and lightweight.
- Full floating type piston pins are used.
- The top ring groove is provided with anodic oxidation coating to improve its wear resistance.
- The piston skirt has been resin-coated to reduce frictional loss.
- By increasing the machining precision of the cylinder bore diameter, the outer diameter of the piston has been made into the one type.

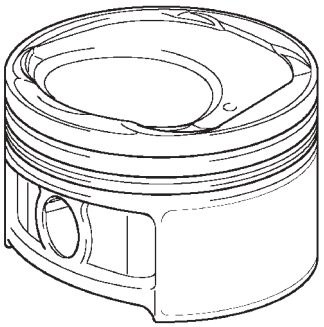

258AE110

6) Connecting Rod

- The connecting rods and cap are made of high strength material for weight reduction.
- Nutless-type plastic region tightening bolts of the connecting rod are adopted for a lighter design.
- The connecting rod bearings have been reduced in width to reduce frictional loss.

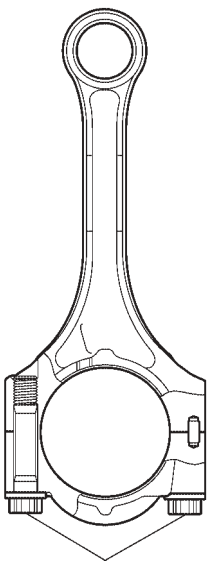

Plastic Region Tightening Bolt 258AE124

7) Crankshaft

- The forged crankshaft has 5 journals and 8 balance weights.
- The crankshaft bearings have been reduced in width to reduce frictional loss.
- The balance shaft drive gear has been installed onto the crankshaft.
- The precision and surface roughness of the pins and journals have been improved to reduce friction.

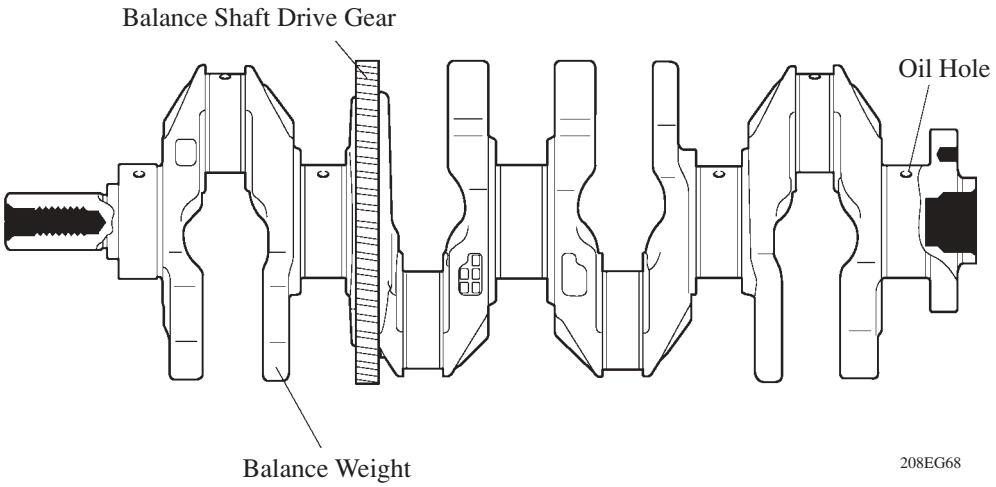

8) Balance Shaft

- A balance shaft has been adopted to reduce vibrations.
- A direct-drive system has been adopted which makes use of gear that is installed onto the counterweight of crankshaft.
- In addition, a resin gear has been adopted on the driven side to suppress noise and offer lightweight design.

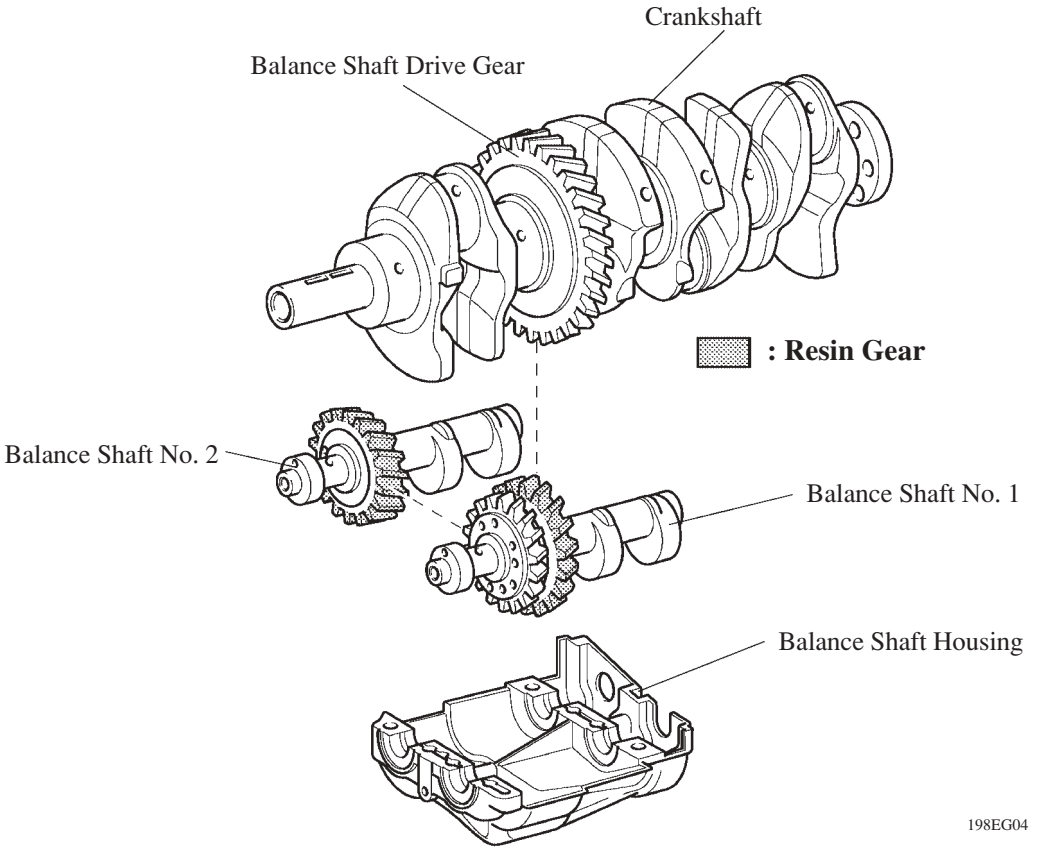

5. Valve Mechanism

1) General

- The VVT-i (Variable Valve Timing-intelligent) system is used to improve fuel economy, engine performance and reduce exhaust emissions. For details, see page 57.
- Along with the increase in the amount of valve lift, the shimless type of valve lifter is used. This valve lifter increases the cam contact surface.

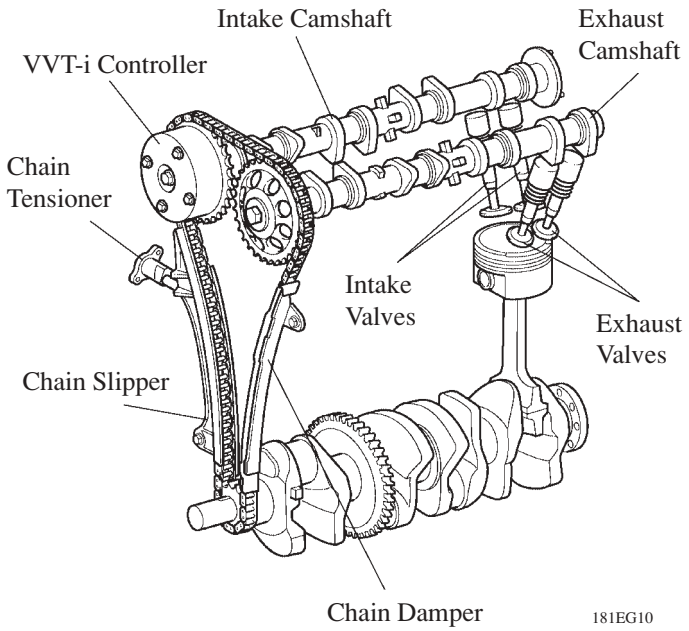

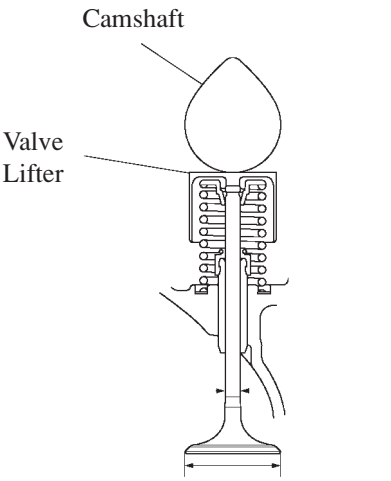

Service Tip

The adjustment of the valve clearance is accomplished by selecting and replacing the appropriate valve lifters. Adjusting valve lifters are available in 35 increments of 0.020 mm (0.0008 in.), from 5.060 mm (0.1992 in.) to 5.740 mm (0.2260 in.).
For details, refer to the Avensis Repair Manual Supplement (Pub. No. RM1045E).

2) Camshaft

- The intake camshaft is provided with the timing rotor to trigger the camshaft position sensor, and the cam to drive the fuel pump (high pressure).
- In conjunction with the adoption of the VVT-i system, an oil passage is provided in the intake camshaft in order to supply engine oil pressure to the VVT-i system.
- A VVT-i controller has been installed on the front of the intake camshaft to vary the timing of the intake valves.

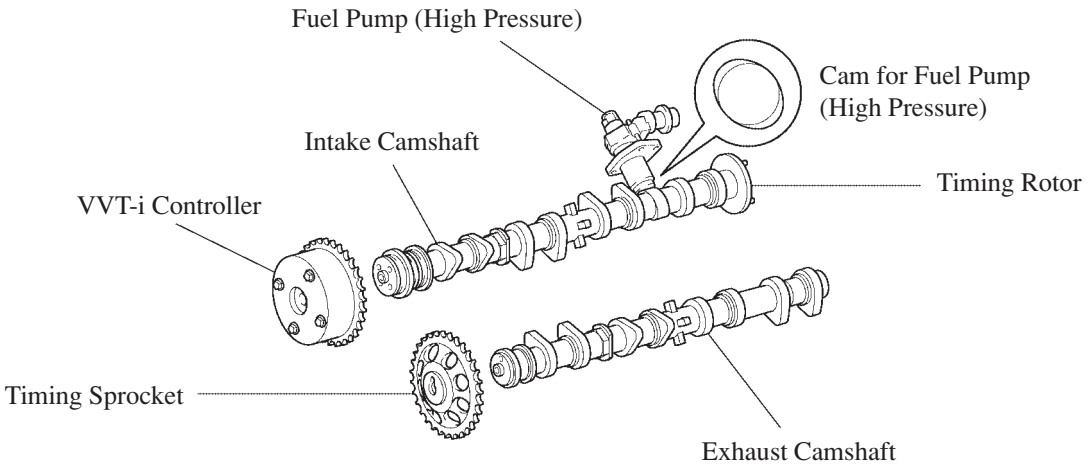

3) Timing Chain and Chain Tensioner

- A roller chain with an 8 mm pitch is used to make the engine more compact.
- The timing chain is lubricated by an oil jet.
- The chain tensioner uses a spring and oil pressure to maintain proper chain tension at all times. The chain tensioner suppresses noise generated by the timing chain.
- A ratchet type non-return mechanism is also used.
- To improve serviceability, the chain tensioner is constructed so that it can be removed and installed from the outside of timing chain cover.

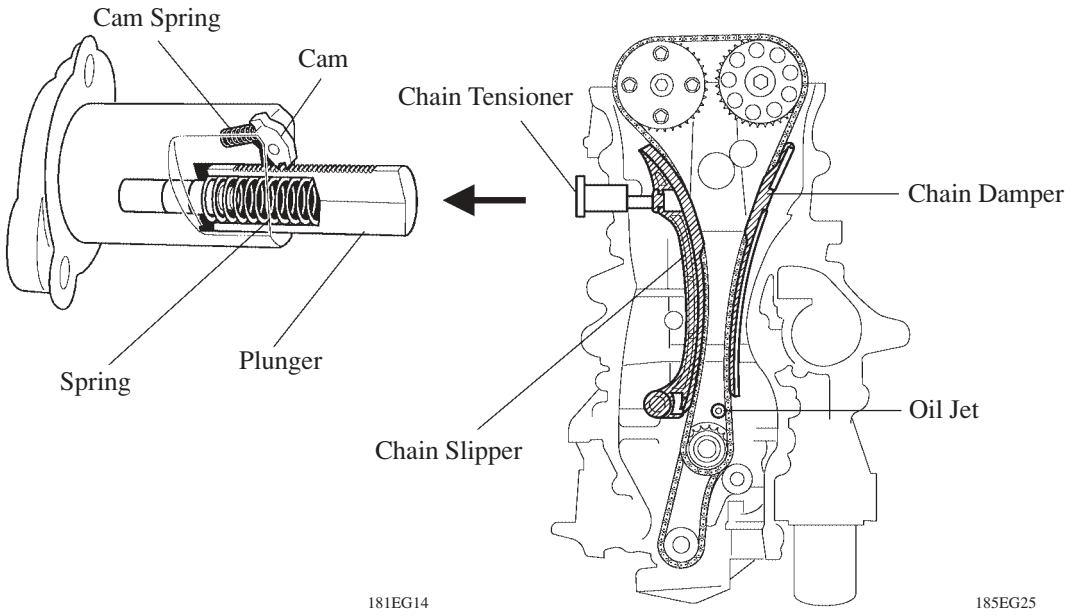

6. Lubrication System

1) General

- The lubrication circuit is fully pressurized and oil passes through an oil filter.
- The trochoidal type oil pump is chain-driven by the crankshaft.
- This engine has an oil return structure in which the oil force-fed to the upper cylinder head returns to the oil pan through the cylinder block and chain cover.
- The oil filter is attached downward from the crankcase to improve serviceability.
- Along with the adoption of the VVT-i system, the cylinder head is provided with a VVT-i controller and a camshaft timing oil control valve. This system is operated by the engine oil.
- The water-cooled oil cooler has been installed between the crank case and the oil filter.

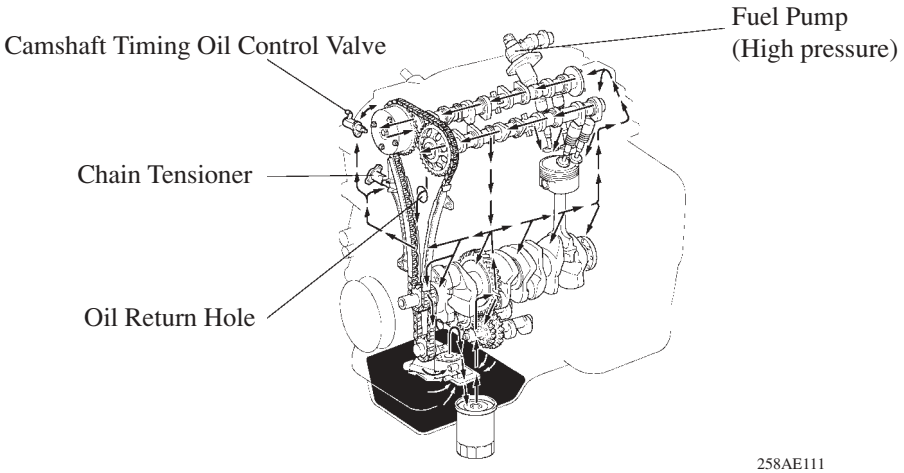

▶ Lubrication Circuit ◀

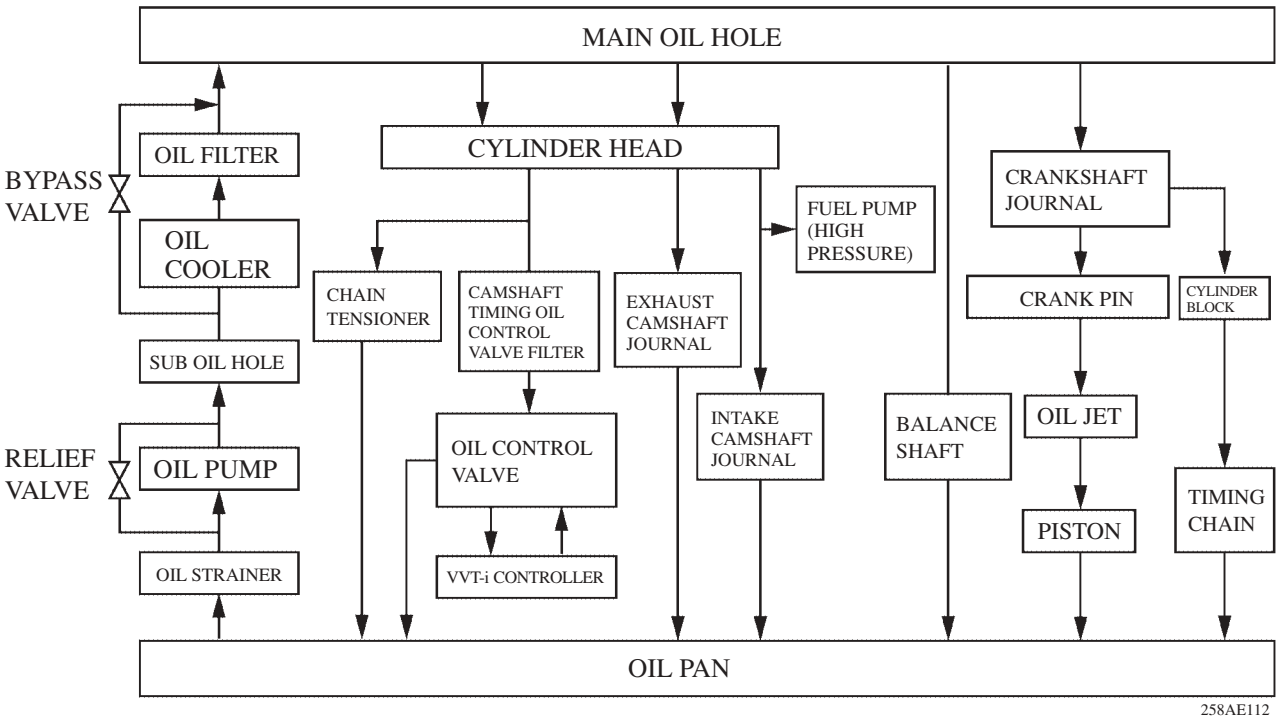

▶ Oil Capacity ◀

liters (US qts, Imp. qts)

Dry	5.0 (5.3, 4.4)
with Oil Filter	4.3 (4.5, 3.8)
without Oil Filter	4.1 (4.3, 3.6)

2) Oil Pump

- The trochoidal type oil pump is chain-driven by the crankshaft, and fits compactly inside the timing chain cover.
- Friction is reduced by means of 2 relief holes in the internal relief system.

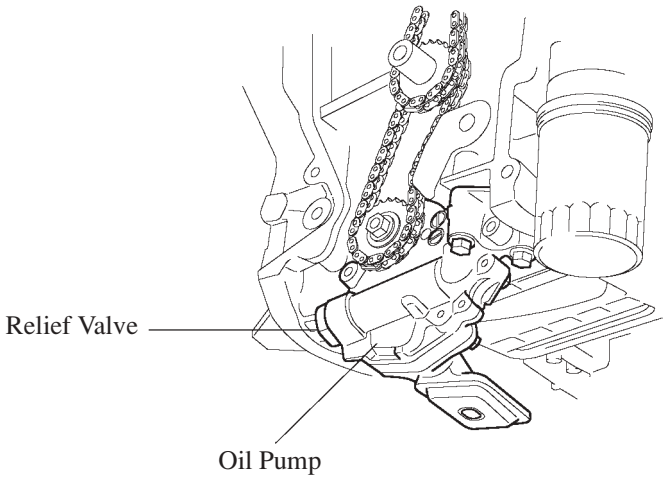

185EG27

3) Oil Cooler

A water-cooled oil cooler has been installed between the crank case and the oil filter. To improve serviceability, a drain cock for engine coolant is also included.

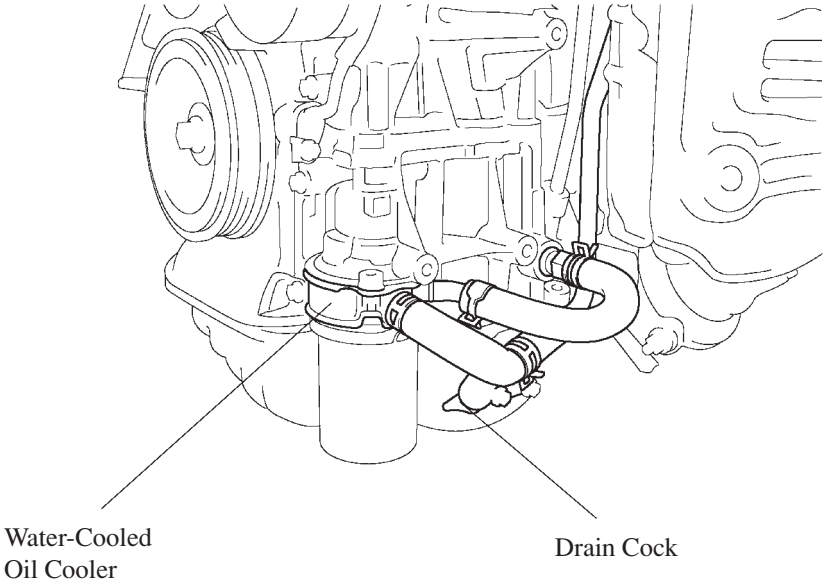

181EG30

7. Cooling System

- The cooling system is a pressurized, forced-circulation type.
- A thermostat with a bypass valve is located on the water inlet housing to maintain suitable temperature distribution in the cooling system.
- An aluminum radiator core is used for weight reduction.
- The flow of the engine coolant makes a U-turn in the cylinder block to ensure a smooth flow of the engine coolant. In addition, a bypass passage is enclosed in the cylinder head and the cylinder block.
- Warm water from the engine is sent to the throttle body to prevent freeze-up.
- A swirl chamber for the water pump has been provided in the cylinder block to make the water pump more compact.

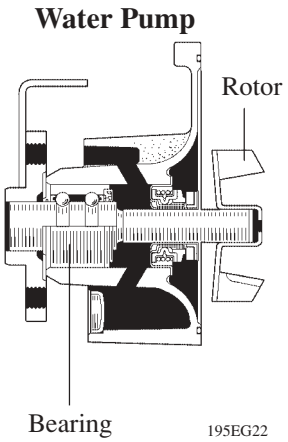

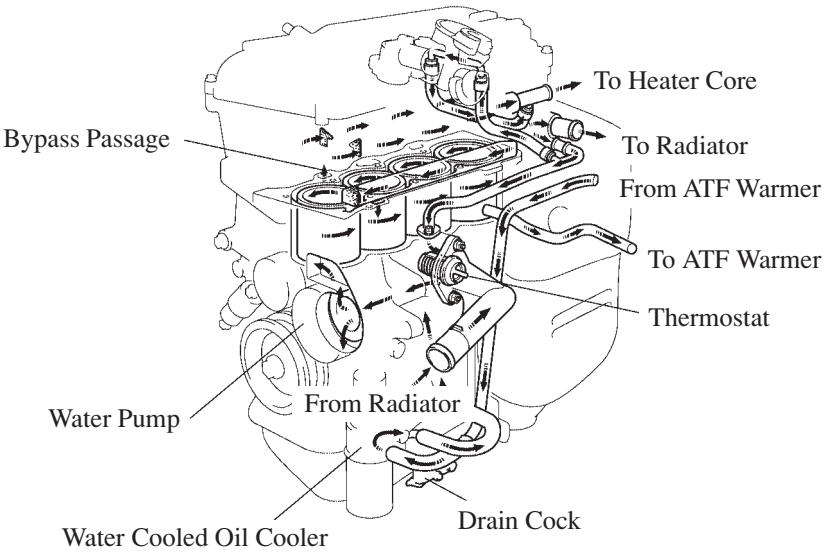

▶ Specification ◀

Capacity liters (US qts, Imp. qts)	LHD	6.3 (6.7, 5.5)
	RHD	6.4 (6.8, 5.6)
Type	TOYOTA Genuine Super Long Life Coolant or Equivalent	

▶ Water Circuit ◀

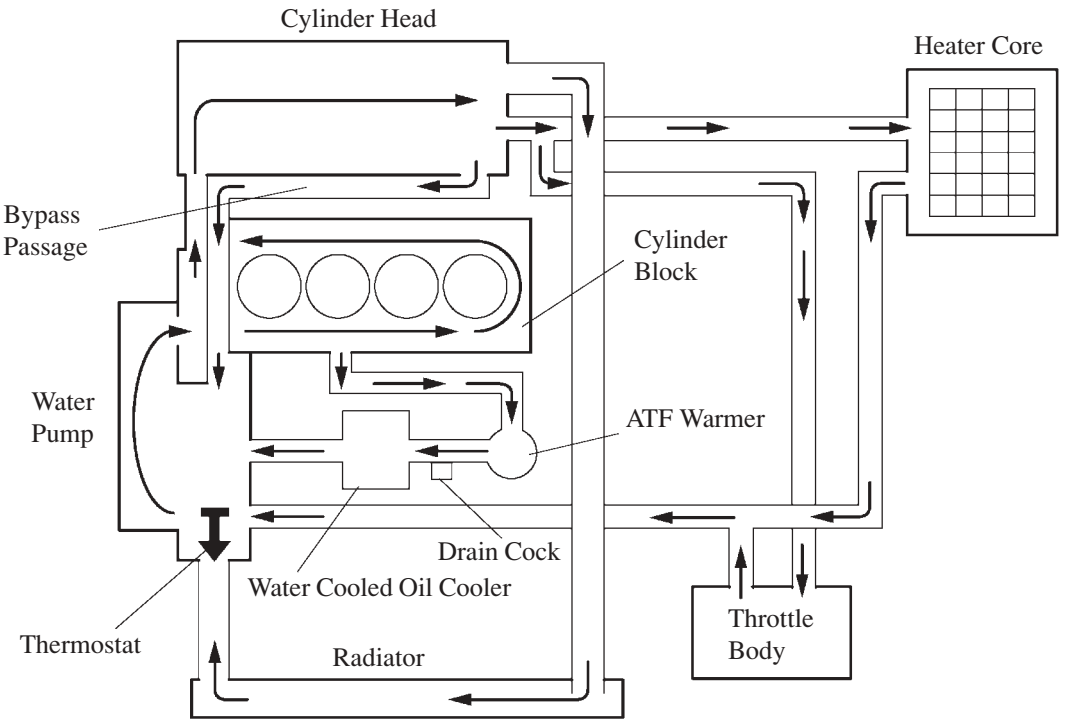

258AE113

8. Intake and Exhaust System

1) General

- A plastic intake manifold is used for weight reduction.
- A stainless steel exhaust manifold is used for weight reduction.
- The three resonators has been provided in the intake pipe to reduce air intake noise.
- Plastic air cleaner case clamps are used.
- An ultra thin-wall ceramic TWC (Three-Way Catalytic Converter) is used. By decreasing the thermal capacity in this manner, it becomes easier to heat the catalyst and the catalyst's exhaust purifying performance is improved.

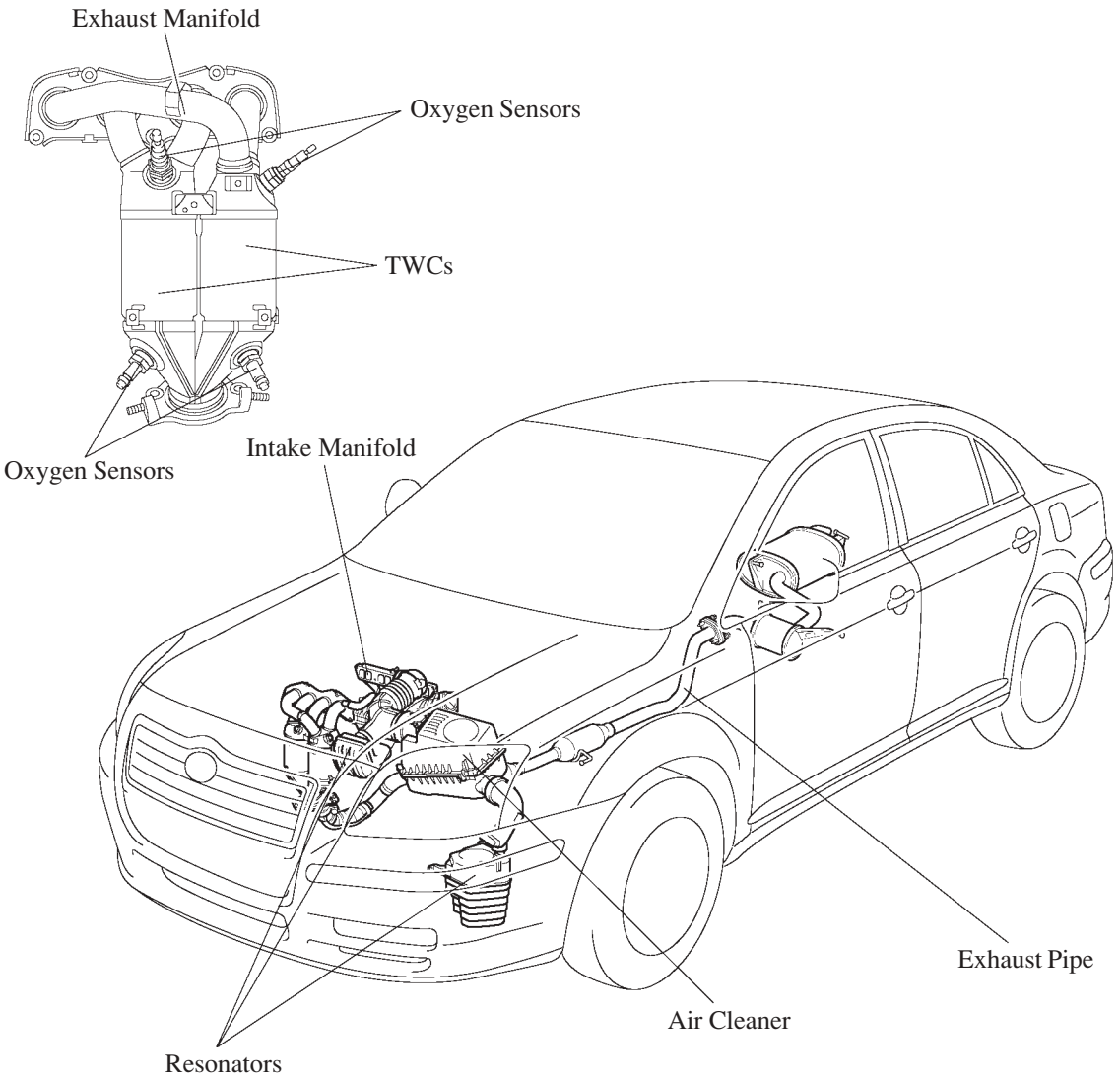

258AE114

2) Intake Manifold

- The intake manifold has been made of plastic to reduce the weight and the amount of heat transferred from the cylinder head. As a result, it has become possible to reduce the intake air temperature and improve the intake volumetric efficiency.
- Eight, independent long ports have been adopted to improve the torque in the low-to mid-range engine speeds.
- A vacuum tank for intake air control has been built in to achieve a compact package with fewer parts.

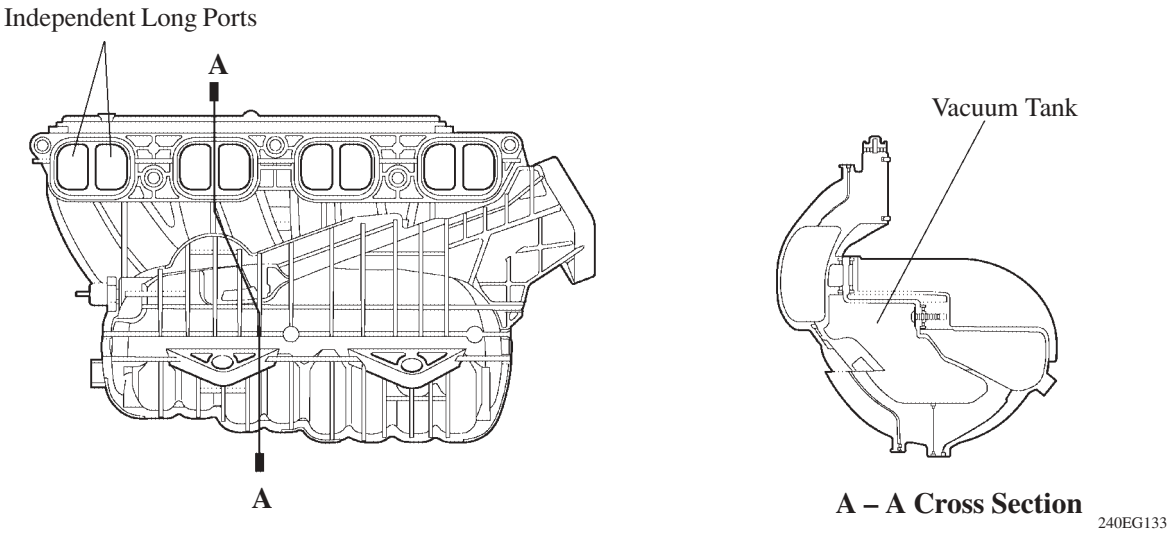

3) Exhaust Pipe

- An underfloor catalyst has been adopted and the pipe upstream of the catalyst has been made with a double-wall pipe construction.
- To improve noise and vibration performance, ball joints have been adopted at two locations.

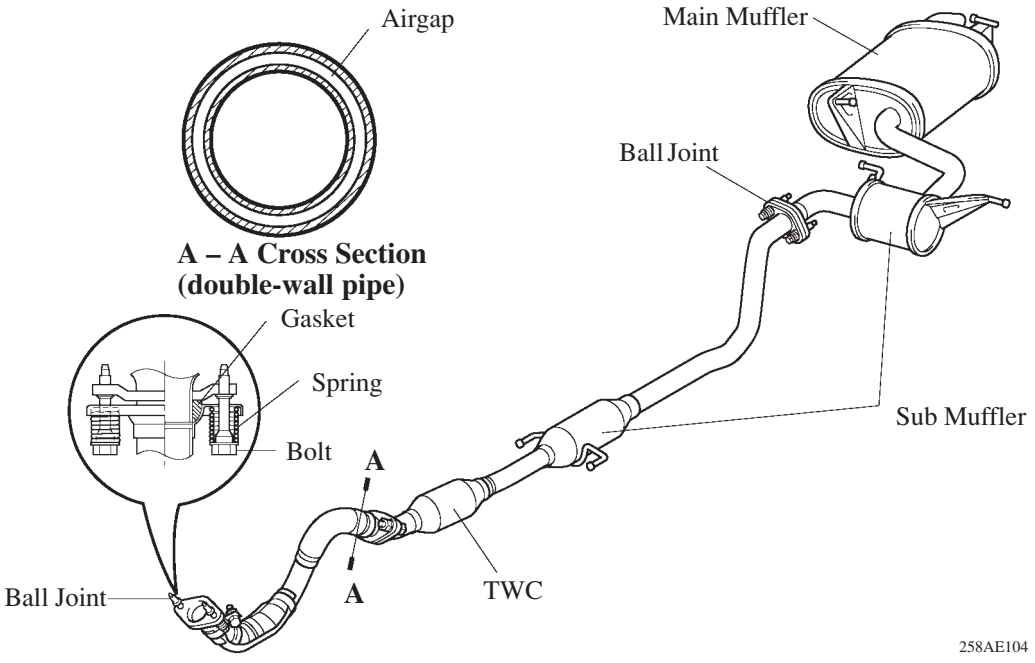

3) TWC (Three-way Catalytic Converter)

A ceramic type TWC has been adopted. This TWC enables to improve exhaust emissions by optimizing the cells density and the wall thickness.

9. Fuel System

1) General

- A direct injection system used in the fuel system of the 2AZ-FSE engine. This system consists of a fuel pump (for high pressure), delivery pipe, and slit nozzle type injectors.
- A fuel cut control is used to stop the fuel pump when the SRS airbag is deployed in a front or side collision.
- A quick connector is used to connect the fuel pipe with the fuel hose to improve serviceability.

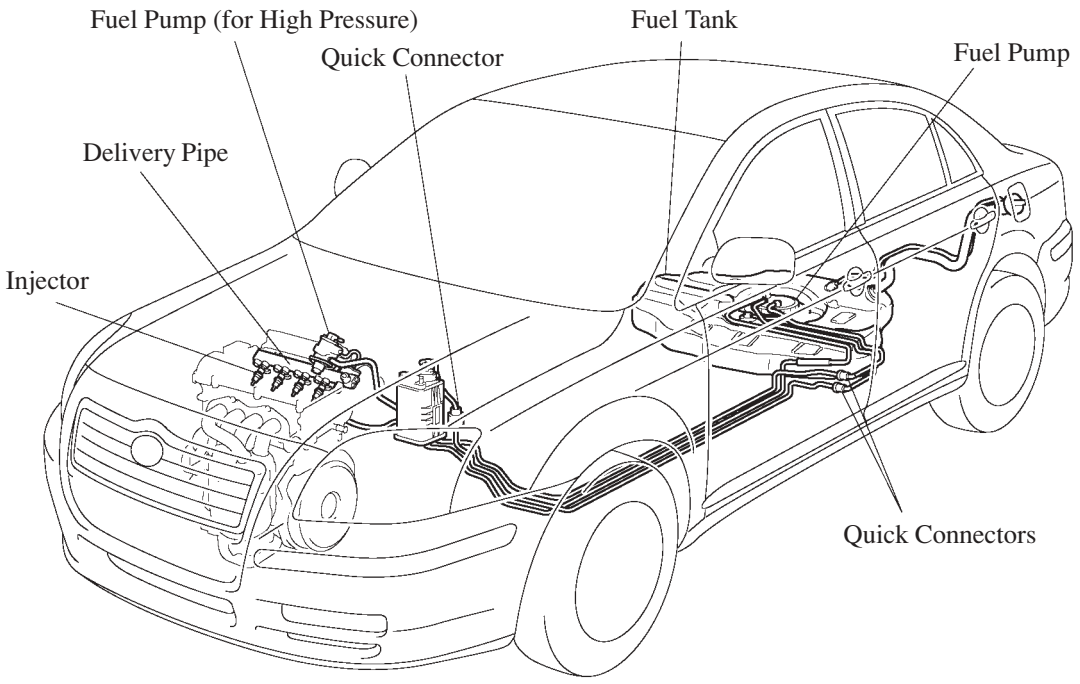

258AE120

2) Direct Injection System

- Mainly consisting of a fuel pump (high pressure), delivery pipe, and slit nozzle type injectors, this system effects optimal control for combustion by controlling the fuel pressure, injection volume, and the injection timing via the engine ECU and EDU (Electronic Driver Unit).

▶ System Diagram ◀

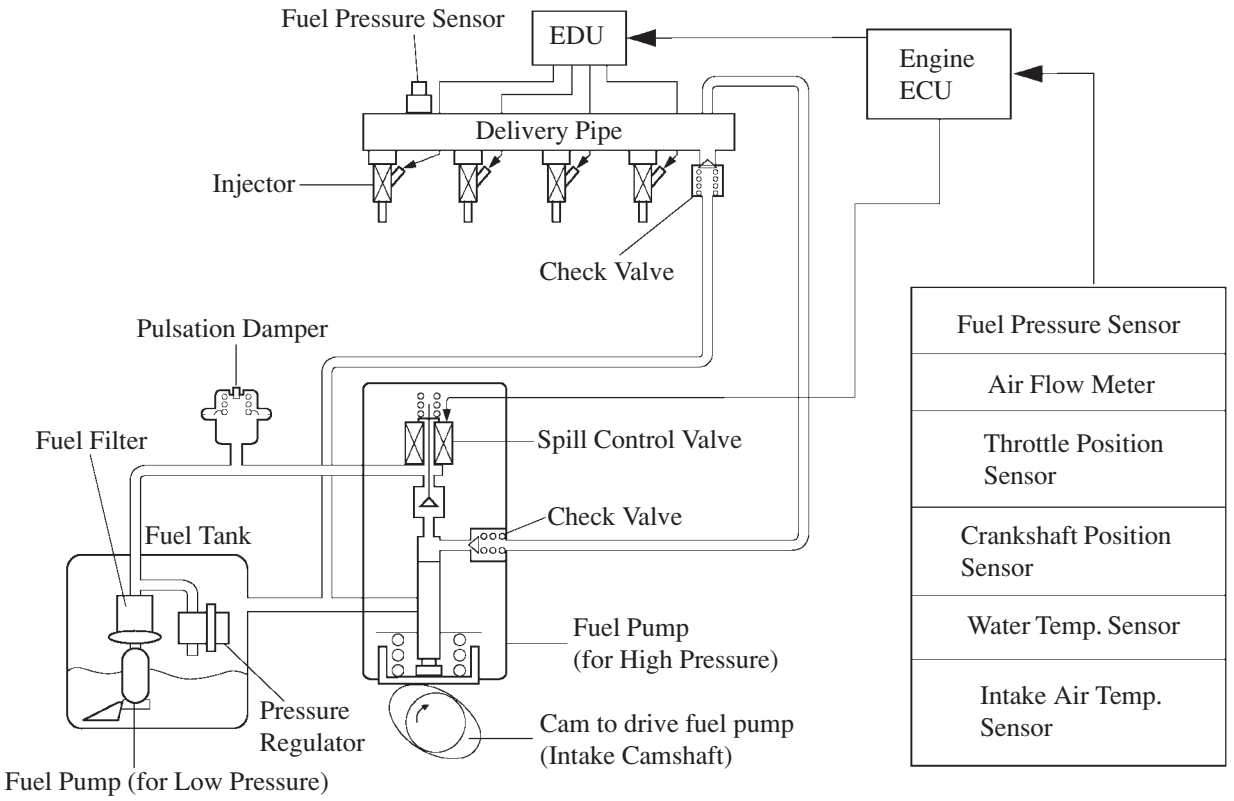

240EG117

- The direct injection system for the 2AZ-FSE has following components and functions.

Component	Outline
Fuel Pump (for High Pressure)	To pressurize the fuel from the fuel pump (for low pressure) from 8 to 13 MPa and send it to the delivery pipe.
Delivery Pipe	To deliver the high pressure fuel to the injector.
Fuel Pressure Sensor	The fuel pressure sensor senses the fuel pressure and outputs the signal to the engine ECU.
Relief Valve	When the pressure in the delivery pipe is abnormally high, the relief valve leaks the fuel to the fuel tank to reduce pressure.
Injector	To adjust the quantity of the high pressure fuel and inject the fuel directly into the combustion chamber.
EDU (Electronic Driver Unit)	The EDU drives the injector at high speed.
Engine ECU	Depending on the vehicle condition, and based on the signal from each sensor, calculate the optimized injection timing and injection volume, and control the injector and fuel pump (for high pressure).

3) Fuel Pump (for High Pressure)

- Fuel pump consists of a plunger, spill control valve, and check valve. The plunger moves up and down by a pump driving cam (2 waves) of the intake camshaft. The spill control valve is established in the inlet pass of the pump, and electrically opens and closes the valve by a signal from the engine ECU and controls the pump discharging pressure. A check valve is equipped in the outlet of the pump, and it opens the valve when the fuel pressure in the pump has becomes 60 kPa and discharges the fuel to the delivery pipe.

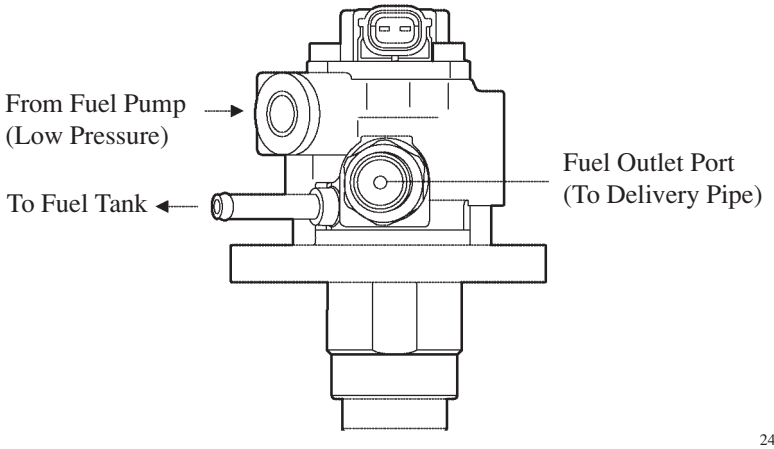

240EG118

- In the suctioning process of the pump, the spill control valve opens and the plunger strokes downward by a spring force, and the fuel is suctioned into the cylinder. Then, by the action of the cam, the plunger strokes upward, but at this time the spill control valve has not closed yet, so the part of the fuel in the cylinder is pushed back to the fuel tank side (while it is not pressurized). On the way in which the plunger is stroking upward (in the compressed process), the engine ECU closes the spill control valve and rise the fuel pressure in the cylinder. When the fuel pressure in the cylinder has exceeded 60 kPa, the check valve starts to open and discharged the fuel to the delivery pipe. The engine ECU controls the fuel discharging pressure from 8 to 13 MPa depending on the driving condition by controlling the timing to close the spill control valve valiantly.

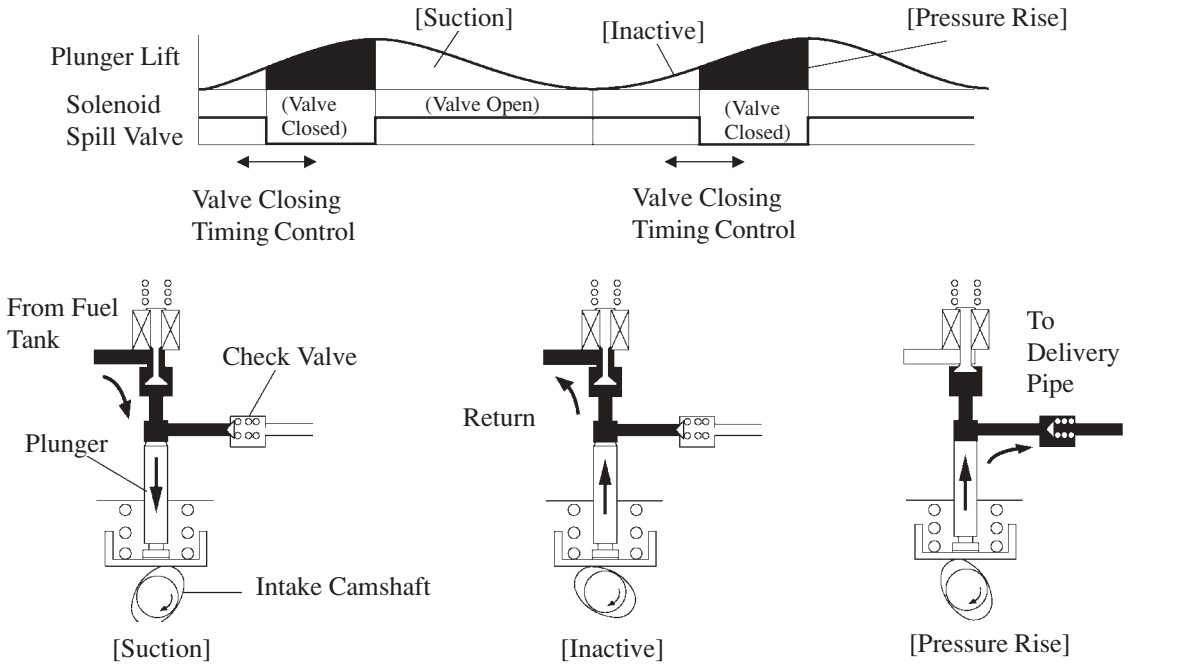

195EG27

4) Delivery Pipe

- A delivery pipe made of aluminum die-casting is adopted. On the delivery pipe, injectors, fuel pressure sensor, and relief valve are directly installed. By storing fuel at a high-pressure (8 to 13 MPa), the peak torque during the pumping of fuel under high load conditions has been restrained, thus reducing the vibration and noise of the fuel injection system.

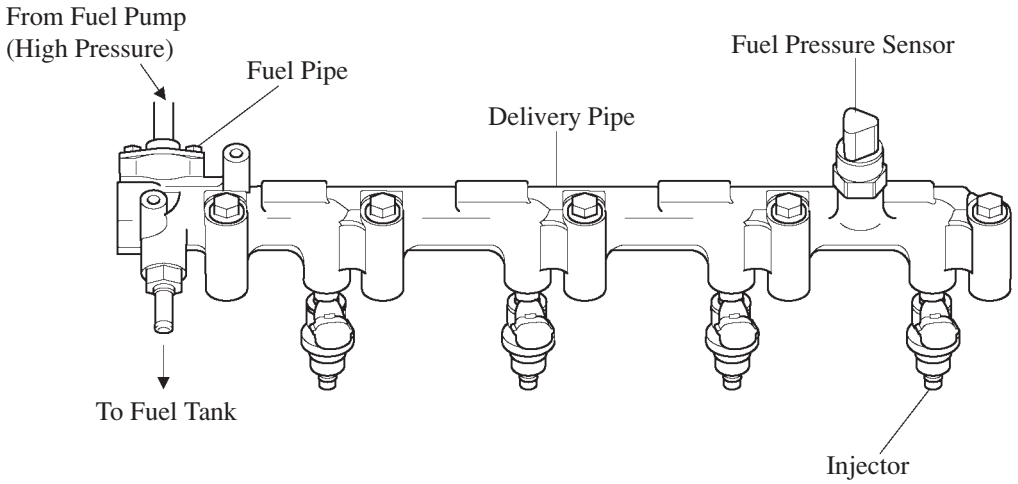

240EG119

5) Fuel Pressure Sensor

- The fuel pressure sensor, which is mounted on the delivery pipe, outputs a signal that represents the fuel pressure in the delivery pipe to the engine ECU in order to constantly regulate the fuel at an optimal pressure.

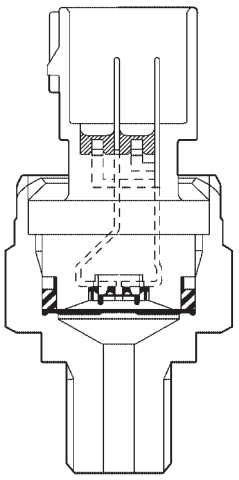

195EG77

6) Injector

- High-pressure, slit-nozzle type injectors are used in conjunction with the adoption of the TOYOTA D-4 (Direct injection, 4-stroke gasoline engine). The injectors are secured to the cylinder head by way of a clamp, and the gaskets are used to seal the combustion gas in the cylinder. In addition, an O-ring and the back-up rings are used to seal the fuel and to reduce noise. And the nozzle hole has been coated to restrain the adhesion of deposits. The injectors, based on a signal from the engine ECU, adjusts the flow of the high pressure fuel and injects the fine-grain sector formed fuel directly to the combustion chamber by a slit nozzle. The injectors are actuated under high-voltage and constant-current control by the EDU in order to inject high-pressure fuel in a short time.

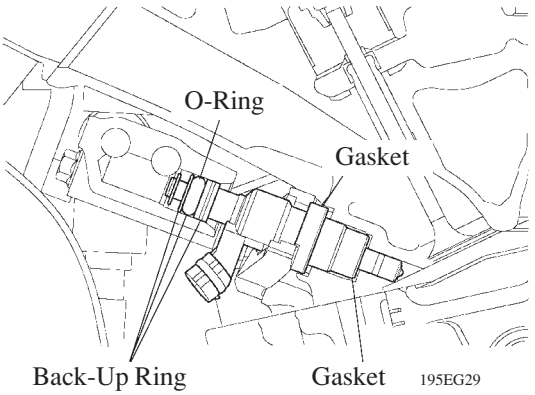

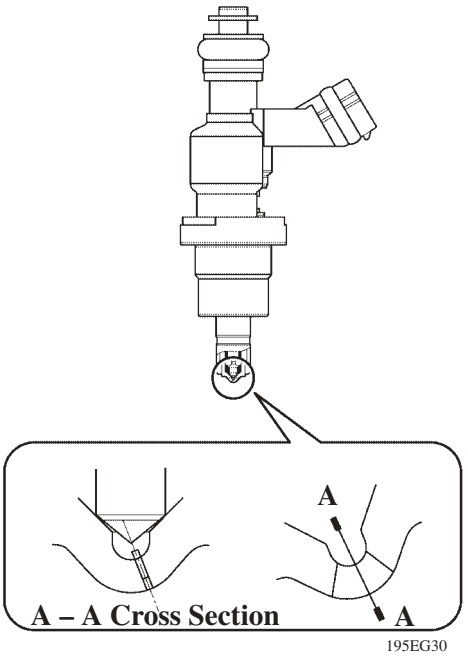

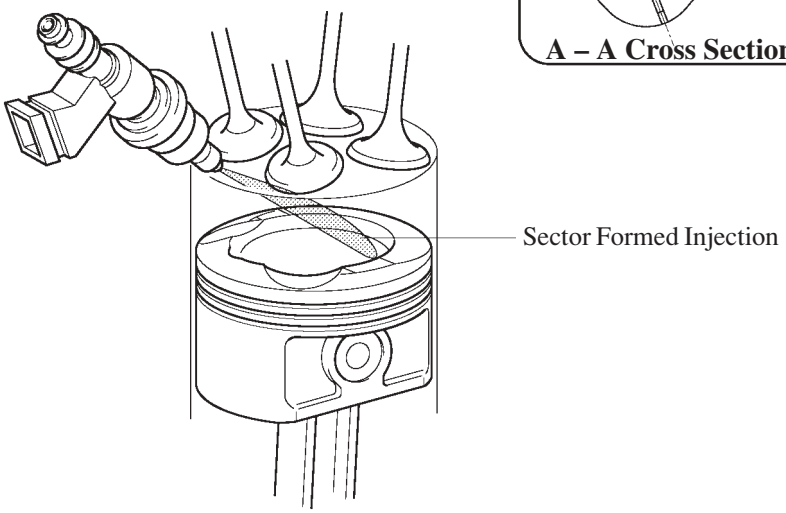

195EG31

7) EDU (Electronic Driver Unit)

- The EDU is used to drive the injector at high speeds. The EDU has realized high-speed driving under high fuel pressure conditions through the use of a DC/DC converter that provides a high-voltage (The voltage increases from 12V to 175V), quick-charging system.
- The engine ECU constantly monitors the EDU and stops the engine in case an abnormal condition is detected.

10. Ignition System

1) General

- A DIS (Direct Ignition System) has been adopted. The DIS improves the ignition timing accuracy, reduces high-voltage loss, and enhances the overall reliability of the ignition system by eliminating the distributor.
  The DIS in the 2AZ-FSE engine is an independent ignition system which has one ignition coil (with igniter) for each cylinder.
- The DIS provides 4 ignition coils, one for each cylinder. The spark plug caps, which provide contact to the spark plugs, are integrated with an ignition coil. Also, an igniter is enclosed to simplify the system.
- Iridium-tipped spark plugs have been adopted to improve ignition performance while maintaining the same level of durability of the platinum-tipped spark plugs.

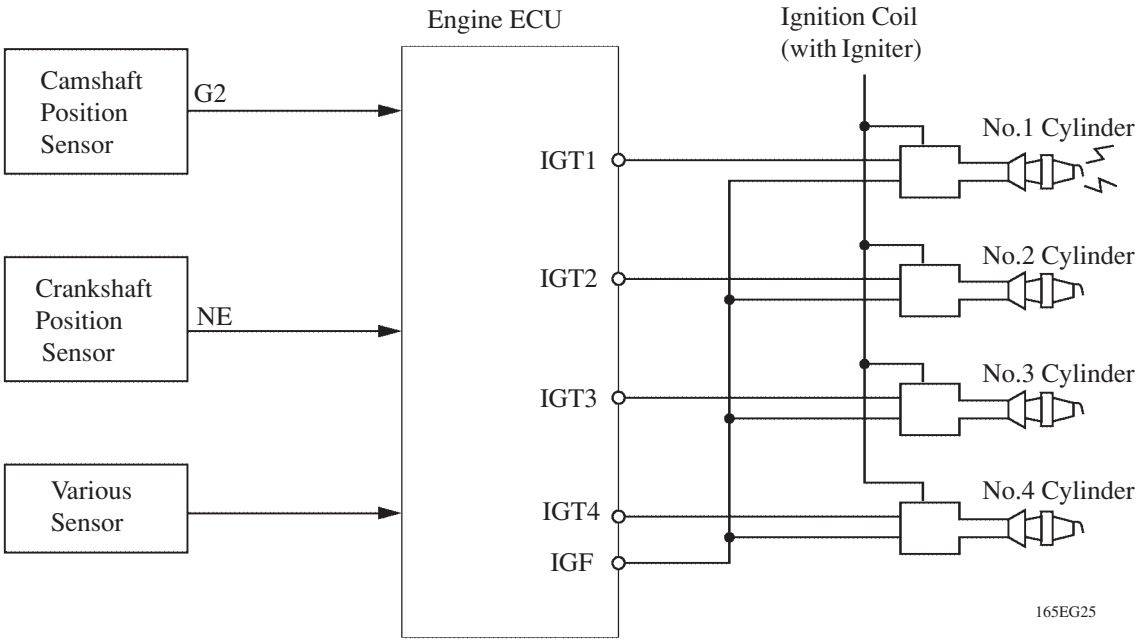

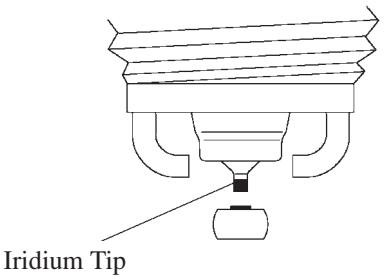

▶ Recommended Spark Plugs ◀

DENSO	SK20BR11
Plug Gap	1.0 – 1.1 mm (0.039 – 0.043 in.)

11. Starting System

The planetary reduction type starter with the interpolar magnet has been adopted.

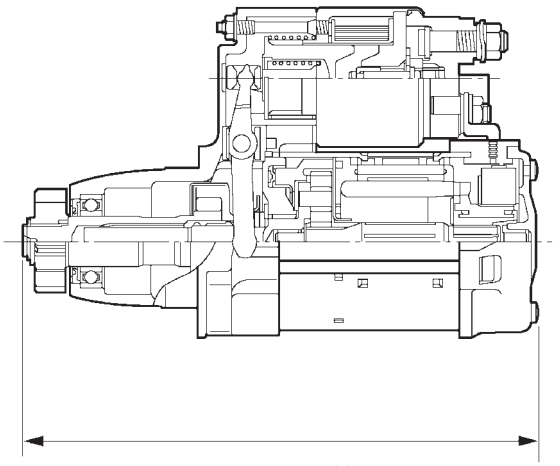

258AE115

▶ Specification ◀

Engine	2AZ-FSE
Length	212 mm (8.35 in.)
Weight g (lb)	3050 (6.72)
Rating Voltage	12 V
Rating Output	1.6 kW
Rotating of Direction	Counterclockwise*

*: Viewed from Pinion Side

12. Serpentine Belt Drive System

- Accessory components are driven by a serpentine belt consisting of a single V-ribbed belt. It reduces the overall engine length, weight and number of engine parts.
- An automatic tensioner eliminates the need for tension adjustment.

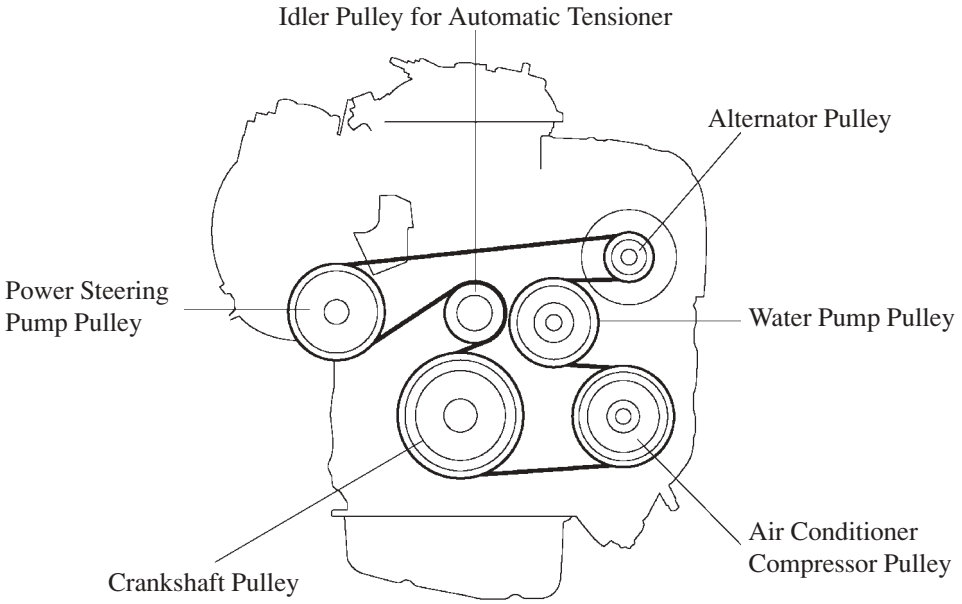

240EG98

13. Engine Control System

1) General

The engine control system for the 2AZ-FSE engine has following features.

System		Outline	2AZ-FSE	1AZ-FSE
D-4 EFI Electronic Fuel Injection [See page 56]		● An L-type EFI system detects the intake air volume with a hot-wire type air flow meter. ● In contrast to the conventional EFI, D-4 EFI conducts the injection volume control and injection timing control simultaneously. ● The fuel injection system is a sequential multiport fuel injection system.	○	○
ESA Electronic Spark Advance		Ignition timing determined by the engine ECU based on signals from various sensors. The engine ECU corrects ignition timing in response to engine knocking.	○	○
VVT-i Variable Valve Timing-intelligent [See page 57]		Controls the intake camshaft to an optimal valve timing in accordance with the engine condition.	○	○
ETCS-i Electronic Throttle Control System-intelligent [See page 58]		Optimally controls the throttle valve opening in accordance with the amount of accelerator pedal effort and the condition of the engine and the vehicle. In addition, comprehensively controls the ISC, VSC system, and TRC systems.	○	○
Intake Air Control [See page 62]		The engine ECU controls the intake air control valve via the VSV and the diaphragm in accordance with the engine conditioning signals (air flow meter, manifold pressure sensor, crankshaft position sensor, water temp. sensor, and throttle position sensor).	○	○
Fuel Pump Control	For High Pressure Side	Regulates the fuel pressure within a range of 8 to 13 MPa in accordance with driving conditions.	○	○
	For Low Pressure Side	● Fuel pump operation is controlled by signal from the engine ECU. ● To stop the fuel pump when the airbag is deployed at the front or side collision.	○	○
Oxygen Sensor Heater Control		Maintains the temperature of the air fuel ratio sensor and oxygen sensor at an appropriate level to increase accuracy of detection of the oxygen concentration in the exhaust gas.	○	○
Evaporative Emission Control		The engine ECU controls the purge flow of evaporative emissions (HC) in the charcoal canister in accordance with engine conditions.	○	○
Air Conditioner Cut-off Control		By turning the air conditioner compressor ON or OFF in accordance with the engine condition, drivability is maintained.	○	○
TWC Warm-Up Control [See page 63]		Significantly retards the ignition timing in order to quickly warm-up the TWC.	○	○
Engine Immobilizer		Prohibits fuel delivery and ignition if an attempt is made to start the engine with an invalid ignition key.	○	○
Diagnosis [See page 64]		When the engine ECU detects a malfunction, the engine ECU diagnoses and memorizes the failed section.	○	○
Fail-Safe [See page 64]		When the engine ECU detects a malfunction, the engine ECU stops or controls the engine according to the data already stored in memory.	○	○

2) Construction

The configuration of the engine control system is as shown in the following chart.

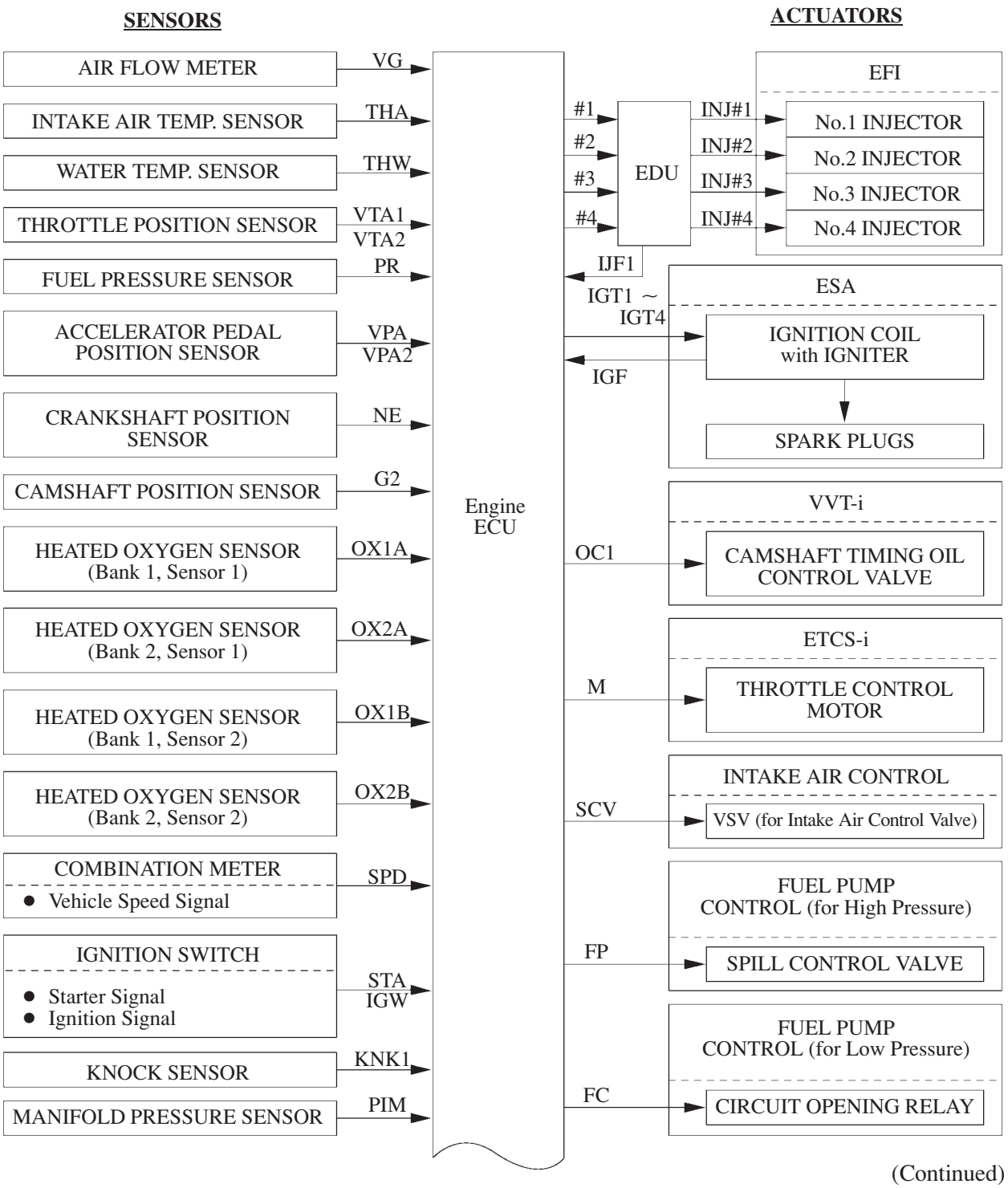

(Continued)

240EG85

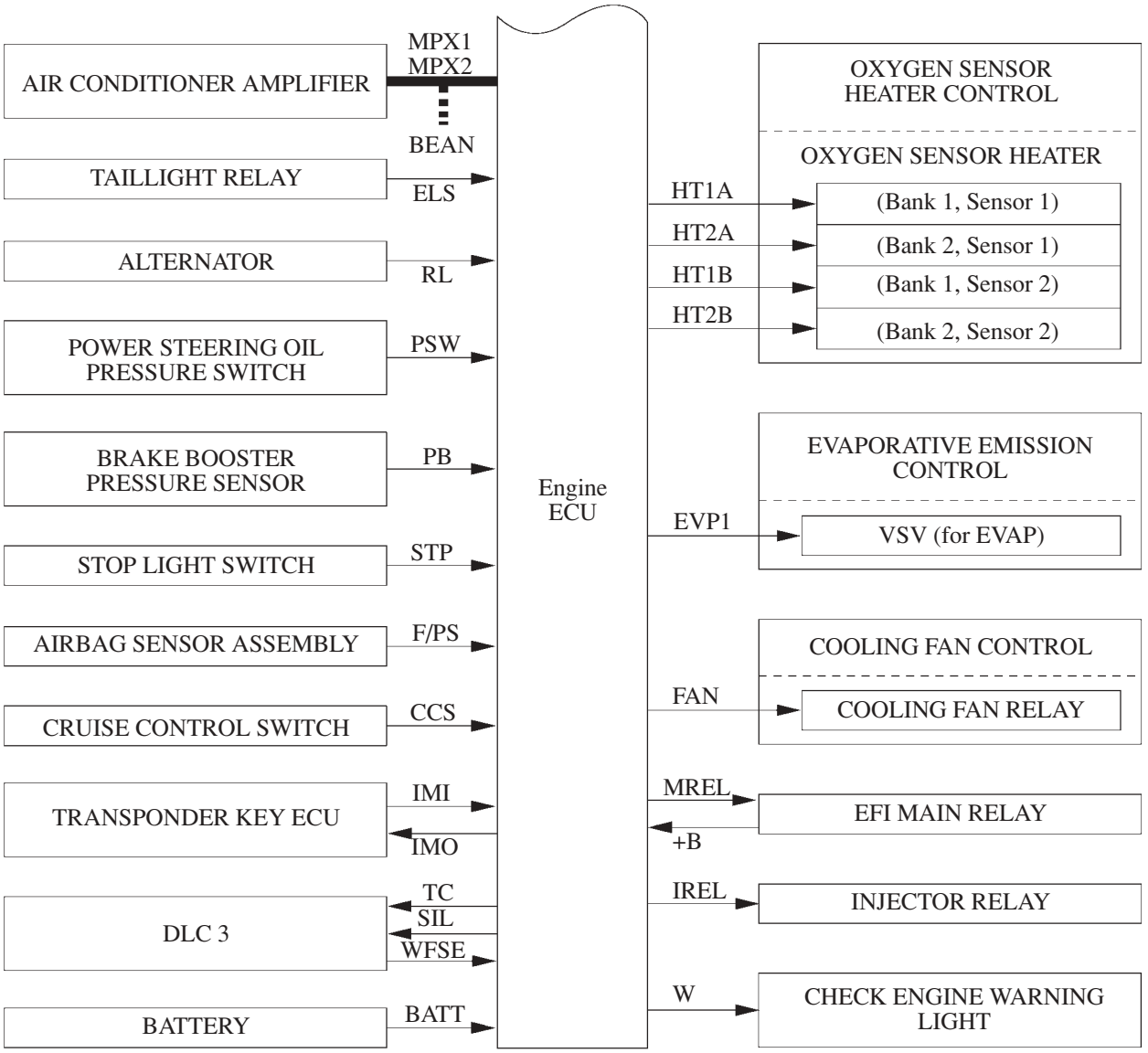
AIR CONDITIONER AMPLIFIER
MPX1
MPX2
BEAN
TAILLIGHT RELAY
ELS
ALTERNATOR
RL
POWER STEERING OIL PRESSURE SWITCH
PSW
BRAKE BOOSTER PRESSURE SENSOR
PB
STOP LIGHT SWITCH
STP
AIRBAG SENSOR ASSEMBLY
F/PS
CRUISE CONTROL SWITCH
CCS
TRANSPONDER KEY ECU
IMI
IMO
DLC 3
TC
SIL
WFSE
BATTERY
BATT
Engine ECU
OXYGEN SENSOR HEATER CONTROL
OXYGEN SENSOR HEATER
HT1A
HT2A
HT1B
HT2B
(Bank 1, Sensor 1)
(Bank 2, Sensor 1)
(Bank 1, Sensor 2)
(Bank 2, Sensor 2)
EVAPORATIVE EMISSION CONTROL
EVP1
VSV (for EVAP)
COOLING FAN CONTROL
FAN
COOLING FAN RELAY
MREL
+B
EFI MAIN RELAY
IREL
INJECTOR RELAY
W
CHECK ENGINE WARNING LIGHT

258AE117

3) Engine Control System Diagram

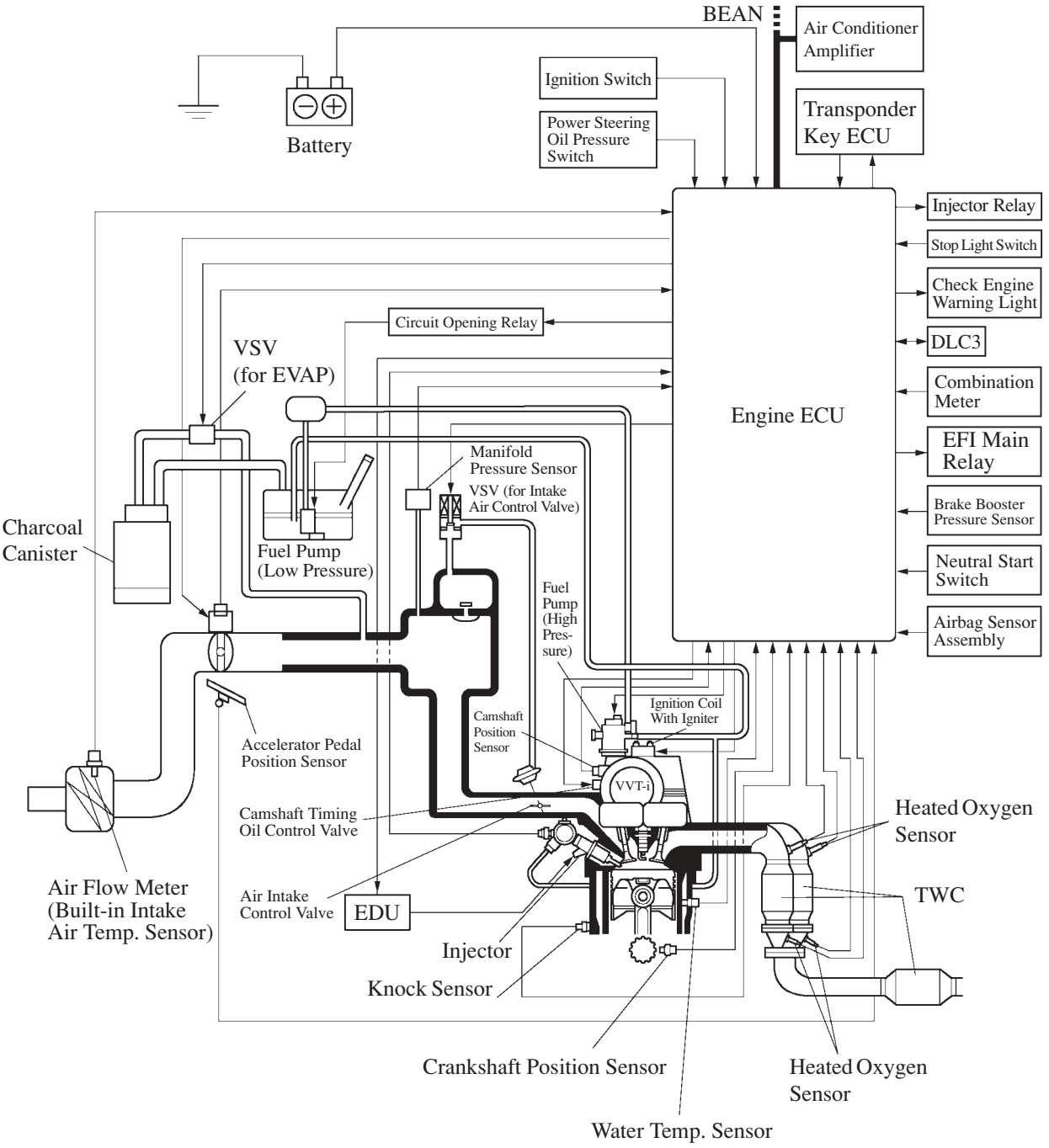

258AE122

4) Layout of Main Components

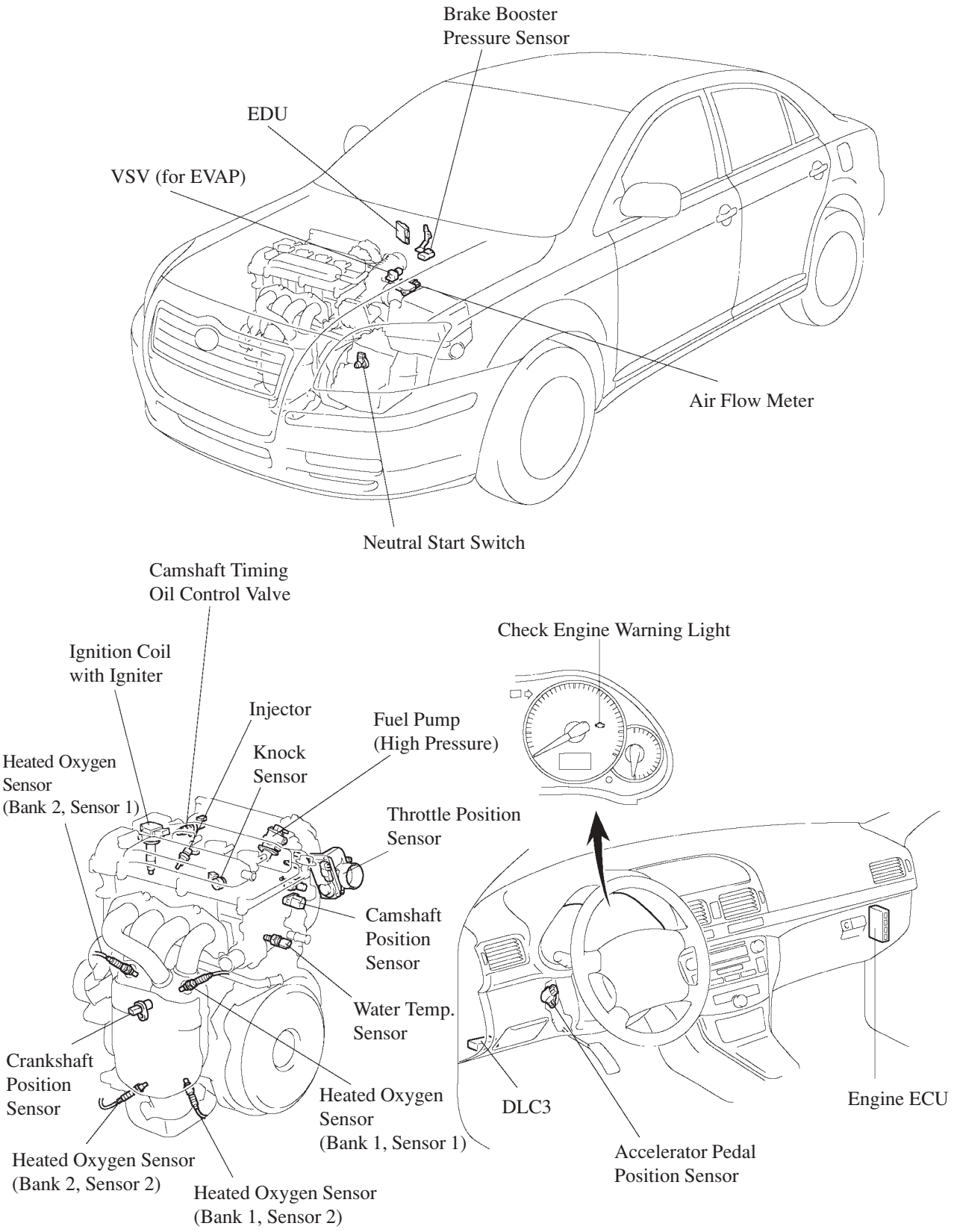

258AE116

5) Main Components of Engine Control System

The main components of the 2AZ-FSE engine control system are as follows:

Components	Outline	Quantity	
		2AZ-FSE	1AZ-FSE
Engine ECU	32-bit	1	1
Air Flow Meter	Hot-Wire Type	1	1
Manifold Pressure Sensor	Semiconductor Type	1	1
Fuel Pressure Sensor	Semiconductor Strain Gauge Type	1	1
Crankshaft Position Sensor (Rotor Teeth)	Pick-Up Coil Type (36 – 2)	1	1
Camshaft Position Sensor (Rotor Teeth)	Pick-Up Coil Type (3)	1	1
Throttle Position Sensor	No-contact Type	1	1
Accelerator Pedal Position Sensor	Linear Type	1	1
Knock Sensor	Built-in Piezoelectric Element Type (Flat Type)	1	1
Oxygen Sensor (Bank 1, Sensor 1) (Bank 2, Sensor 1) (Bank 1, Sensor 2) (Bank 2, Sensor 2)	Type with Heater	4	4
Injector	High Pressure Slit Nozzle Type	4	4
Brake Booster Pressure Sensor	Semiconductor Type	1	1
EDU (Electronic Driver Unit)	Built-in DC/DC Converter	1	1

6) Air Flow Meter

- This compact and lightweight air flow meter, which is a plug-in type, allows a portion of the intake air to flow through the detection area. By directly measuring the mass and the flow rate of the intake air, the detection precision is improved and the intake air resistance has been reduced.
- This mass air flow meter has a built-in intake air temperature sensor.

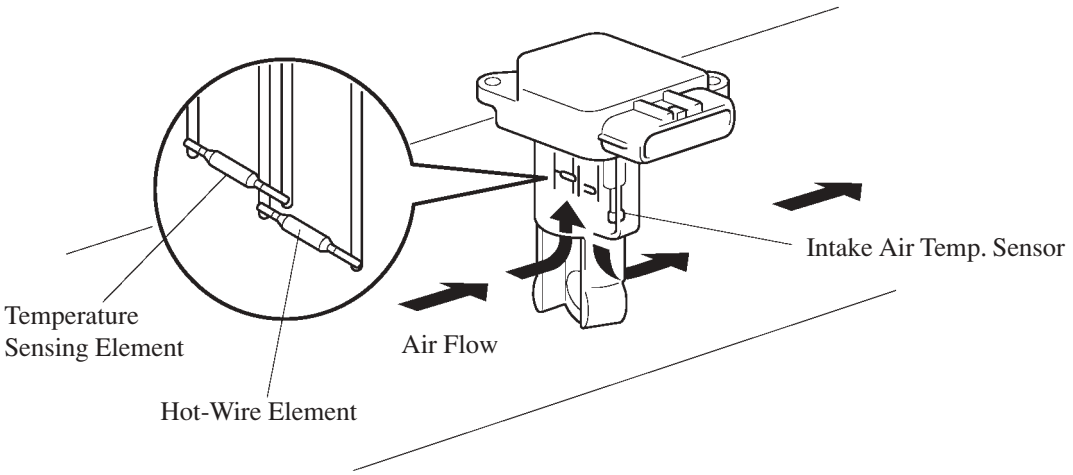

7) Throttle Position Sensor

- The throttle position sensor uses 2 Hall ICs. This sensor detects the throttle valve opening angle by converting into electrical signals the changes in magnetic flux density created when the 2 magnetic yoke revolves around the 2 Hall ICs.
- This sensor converts the throttle valve opening angles into electronic signals with two differing characteristics and outputs them to the engine ECU. One is the VTA1 (main) signal that linearly outputs the voltage along the ensure range of the throttle valve opening angle. The other is the VTA2 (sub) signal that outputs an offset voltage.

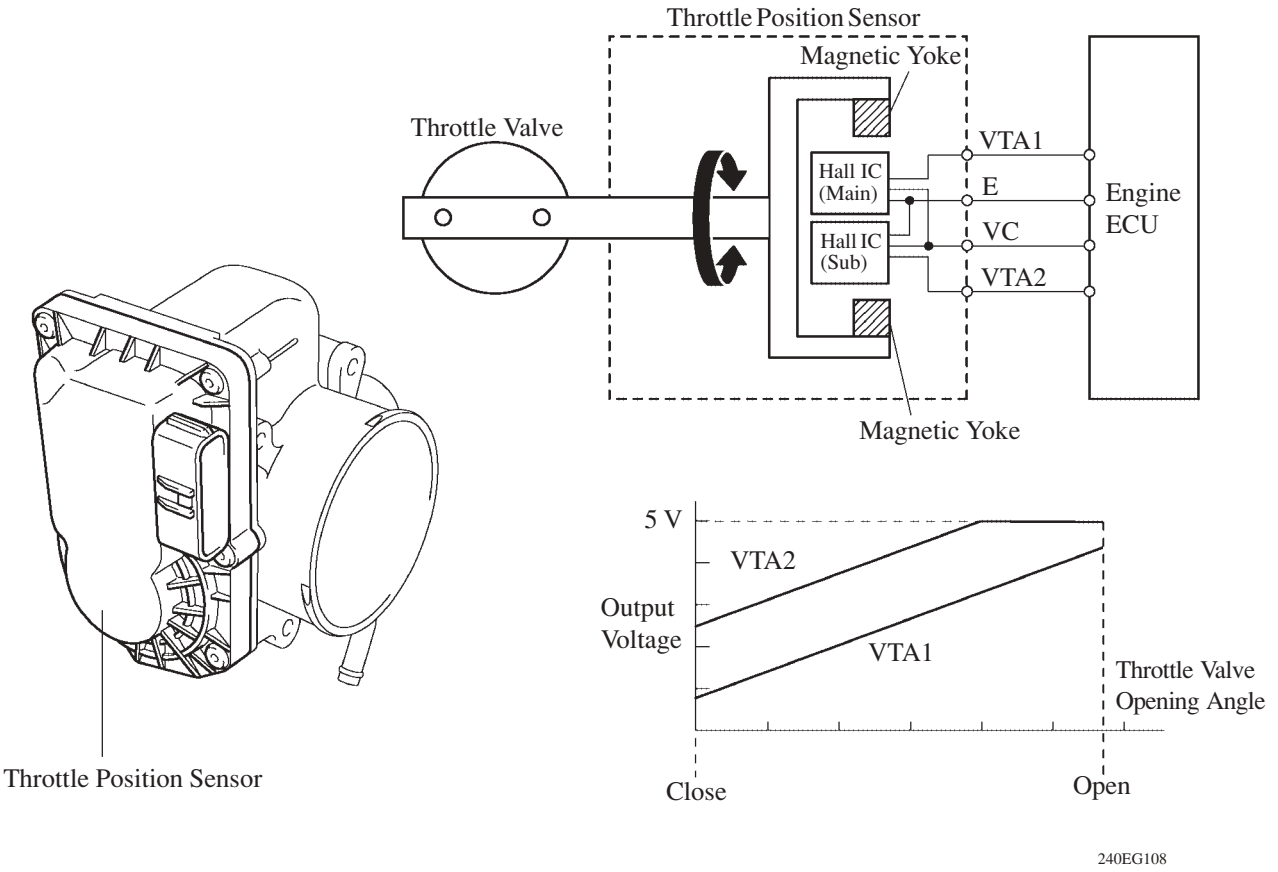

Service Tip

This sensor uses a Hall IC, so the inspection method differs from that of a conventional throttle position sensor.
For details, refer to the Avensis Repair Manual Supplement (Pub. No. RM1045E).

8) Accelerator Pedal Position Sensor

This sensor converts the accelerator pedal depressed angles into electric signals with two differing characteristics and outputs them to the engine ECU. One is the VPA1 signal that linearly outputs the voltage along the entire range of the accelerator pedal depressed angle. The other is the VPA2 signal that outputs on offset voltage.

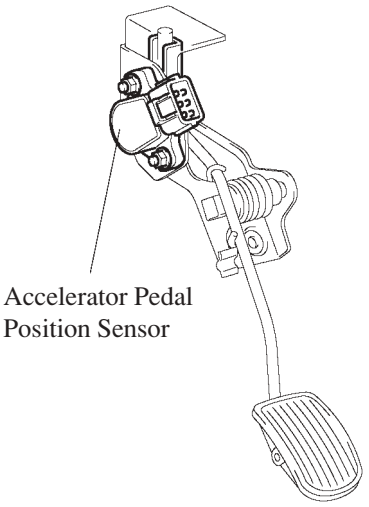

206EG37

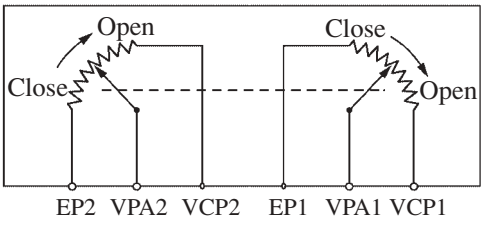

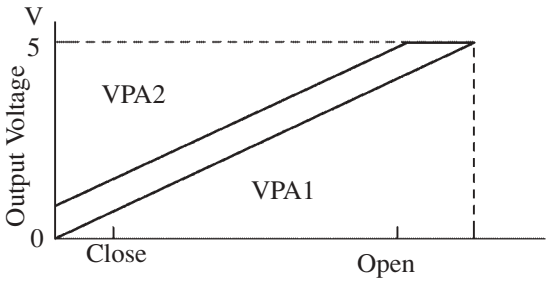

199EG40

9) Brake Booster Pressure Sensor

The brake booster pressure sensor consists of a semiconductor, which utilizes the characteristic of a silicon chip that changes its electrical resistance when pressure is applied to it. The sensor converts the pressure into an electrical signal, and sends it to the engine ECU in an amplified form.

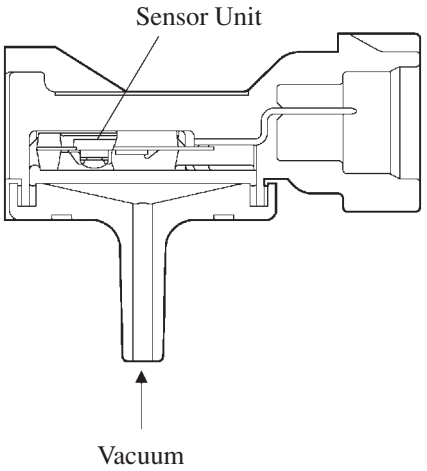

210EG57

10) D-4 EFI (Electronic Fuel Injection) System

- In contrast to the conventional EFI (Electronic Fuel Injection), the D-4 (Direct Injection 4-Stroke Gasoline Engine) EFI conducts the injection volume control and injection timing control simultaneously.
- The injection volume is determined by the engine ECU, based on the signals from the air flow meter, to which corrections from various sensors are added. The engine ECU achieves optimal injection volume by controlling the fuel pressure and the opening time of the injector nozzle.
- A sequential multiport fuel injection system is used. The engine ECU calculates the optimal injection timing independently into each cylinder in accordance with the driving conditions.

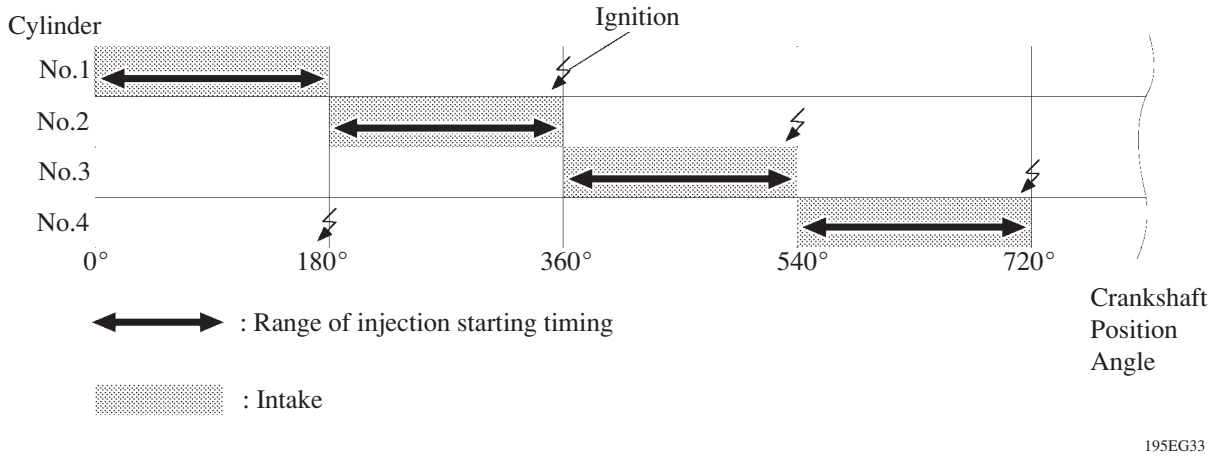

11) VVT-i (Variable Valve Timing-intelligent) System

- The VVT-i system is designed to control the intake camshaft within a range of 45° (of Crankshaft Angle) to provide valve timing that is optimally suited to the engine conditions. This improves torque in all the speed ranges as well as increasing fuel economy, and reducing exhaust emissions.

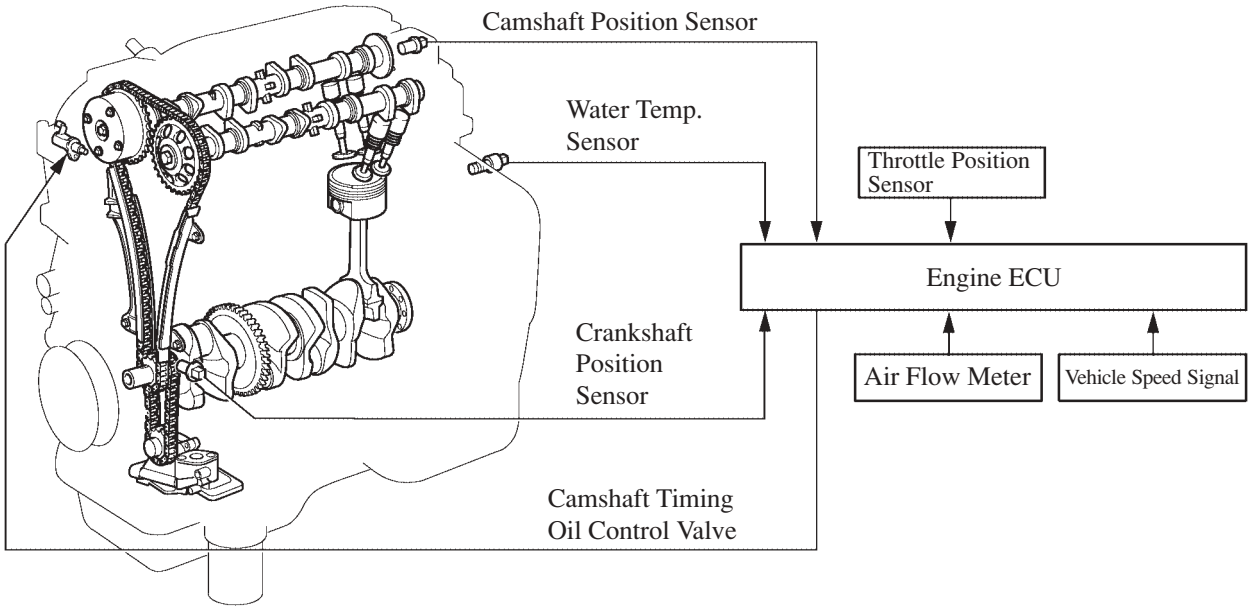

198EG19

- Using the engine speed, intake air volume, throttle position, and water temperature, the engine ECU can calculate optimal valve timing for each driving condition and controls the camshaft timing oil control valve. In addition, the engine ECU uses signals from the camshaft position sensor and the crankshaft position sensor to detect the actual valve timing, thus providing feedback control to achieve the target valve timing.

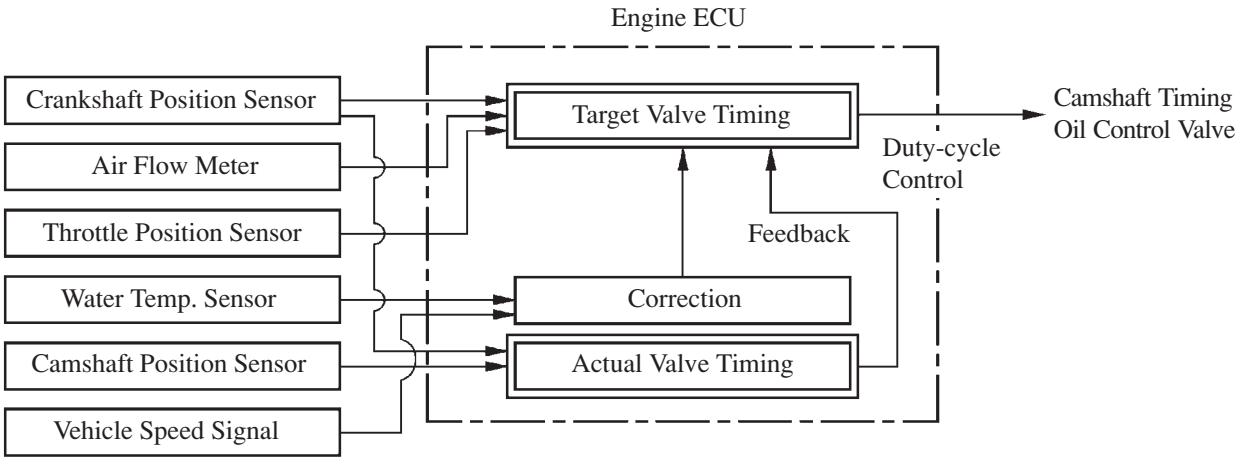

221EG16

12) ETCS-i (Electronic Throttle Control System-intelligent)

a. General

- The ETCS-i system, which realizes excellent throttle control in all the operating ranges, is used.
- The ETCS-i uses the engine ECU to calculate the optimal throttle valve opening that is appropriate for the respective driving condition and uses a throttle control motor to control the opening.
- The ETCS-i controls the ISC (Idle Speed Control) system, the TRC (Traction Control) system, the VSC (Vehicle Stability Control) system, and the cruise control.

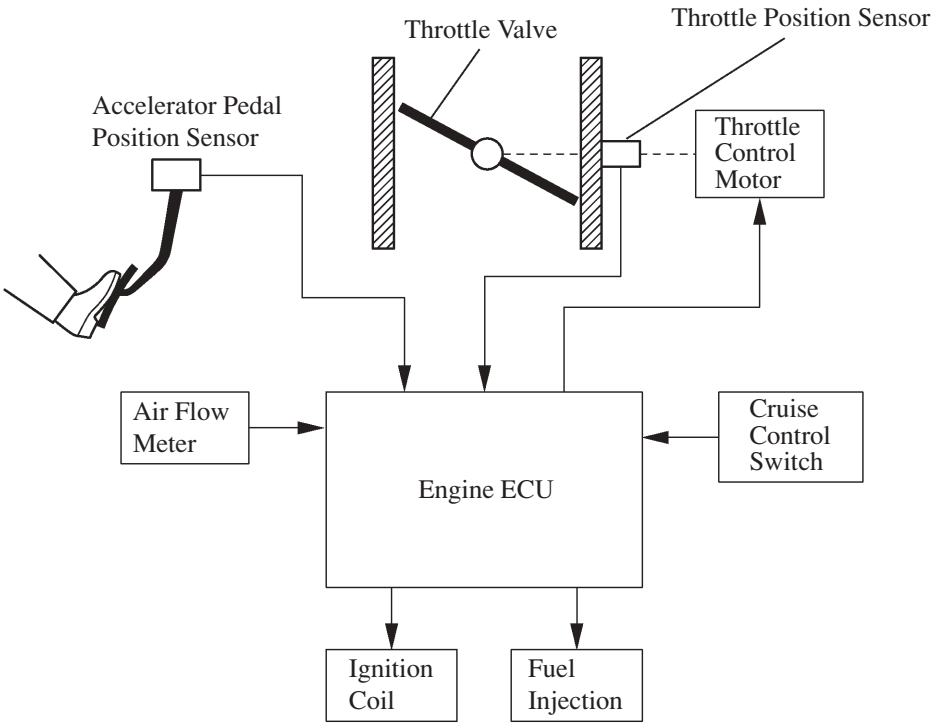

b. Operation

The engine ECU drives the throttle control motor by determining the target throttle valve opening in accordance with the respective operating condition. The 2AZ-FSE engine mainly has the following ETCS-i controls.

Control	Outline
Idle Speed	Controls the engine ECU and the throttle valve in order to constantly effect ideal idle speed control.
TRC Throttle	As part of the TRC system, the throttle valve is closed by a demand signal from the skid control ECU if an excessive amount of slippage is created at a driving wheel, thus facilitating the vehicle in ensuring stability and driving force.
VSC Coordination	In order to bring the effectiveness of the VSC system control into full play, the throttle valve opening angle is controlled by effecting a coordination control with the skid control ECU.
Maximum Vehicle Speed	When the vehicle speed is exceeded the target speed, the engine ECU operates the throttle valve to the closing side and controls the maximum vehicle speed.
Power Train Protect	At the time of multiple shifting down when accelerating, the throttle valve opening is gradually controlled soon after the shift down in order to smooth the driving force change and to protect the driving system parts.
Wheel Locking Protect	On the low μ surface road, when the driver down-shifted manually to decelerate, ECT (Electronically Controlled Transaxle) controls the opening of the throttle valve gradually in order to protect the driving wheels from locking soon after the deceleration.
Cruise Control System	An engine ECU with an integrated cruise control ECU directly actuates the throttle valve to effect the operation of the cruise control.

c. Fail-Safe of Accelerator Pedal Position Sensor

- The accelerator pedal position sensor comprises two (main, sub) sensor circuits. If a malfunction occurs in either one of the sensor circuits, the engine ECU detects the abnormal signal voltage difference between these two sensor circuit and switches to the limp mode. In the limp mode, the remaining circuit is used to calculate the accelerator pedal opening, in order to operate the vehicle under limp mode control.

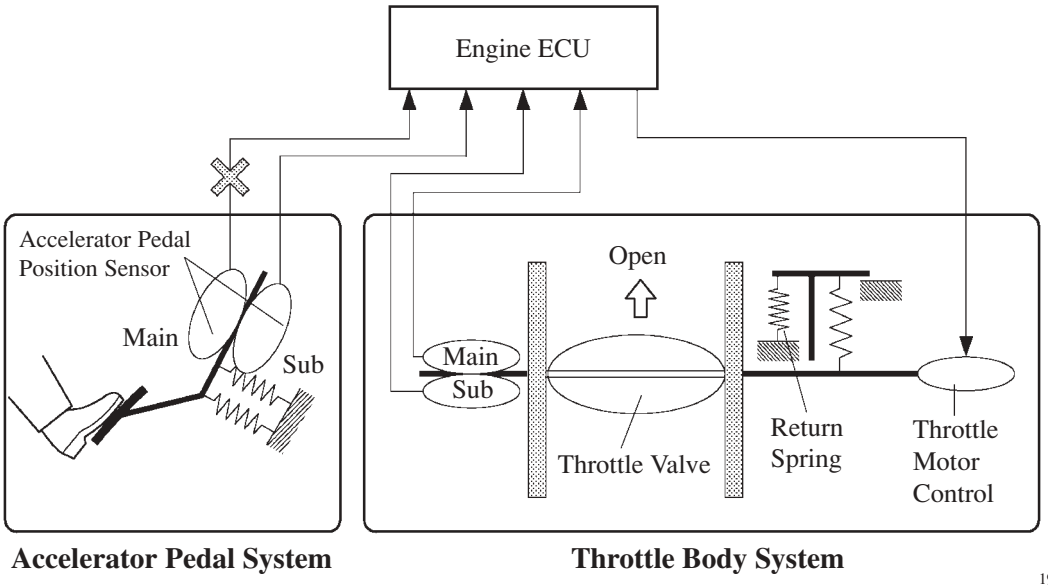

- If both circuits malfunction, the engine ECU detects the abnormal signal voltage from these two sensor circuits and discontinues the throttle control. At this time, the vehicle can be driven within its idling range.

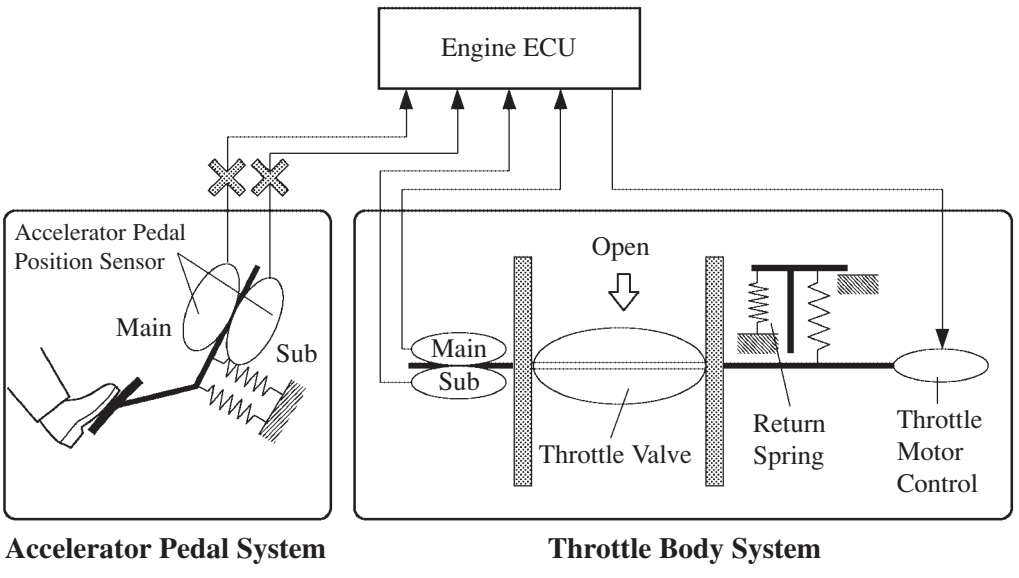

d. Fail-Safe of Throttle Position Sensor

- The throttle position sensor comprises two (main, sub) sensor circuits. If a malfunction occurs in either one of the sensor circuits, the engine ECU detects the abnormal signal voltage difference between these two sensor circuits, cut off the current to the throttle motor, and switches to the limp mode. Then, the force of the return spring causes the throttle valve to return and stay at the prescribed opening. At this time, the vehicle can be driven in the limp mode while the engine output is regulated through the control of the fuel injection and ignition timing in accordance with the accelerator opening.
- The same control as above is effected if the engine ECU detects a malfunction in the throttle control motor system.

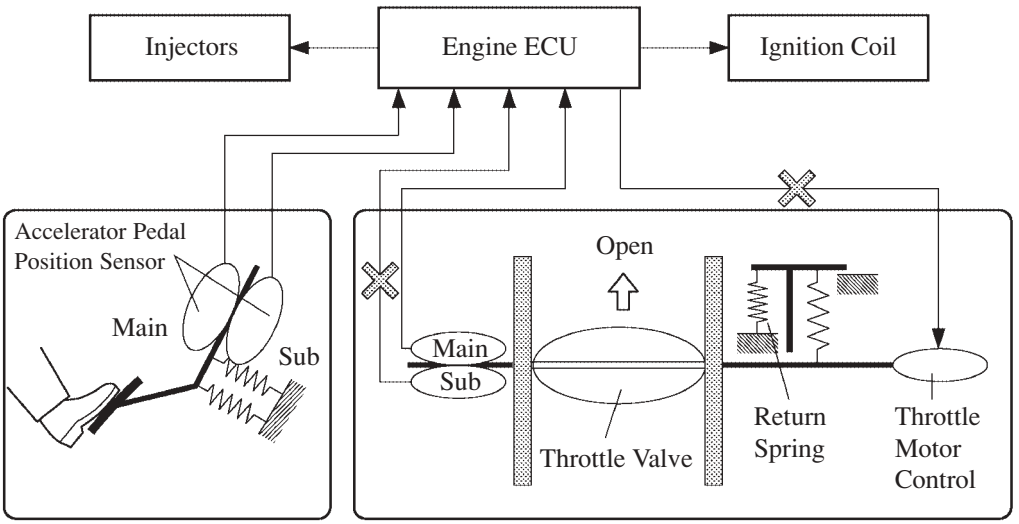

Accelerator Pedal System **Throttle Body System**

199EG47

13) Intake Air Control System

- An aluminum die-cast intake air control valve has been provided between the intake manifold and the cylinder head.
- A valve is provided on one of the two intake ports that are provided for each cylinder, and this valve is closed when the engine is operating at low speeds. Thus, increasing the intake air flow velocity and improving the volumetric efficiency. The valve is also closed when the water temperature is low to promote the atomization of fuel by strengthening the swirl in the combustion chamber. As a result, combustion is stabilized.
- According to the operating conditions of the engine, the engine ECU actuates the VSV (for intake air control valve) to turn the intake air control valve ON/OFF by regulating the vacuum that is applied to the actuator. This uses the vacuum that is stored in the vacuum tank, which is integrated in the intake manifold.
- The engine ECU monitors the operating condition (Open/Close) of intake air control valve by the signal from manifold pressure sensor.

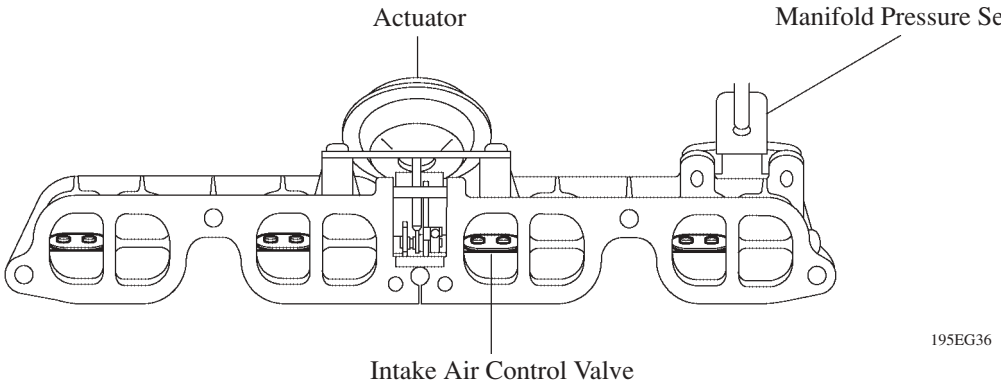

▶ System Diagram ◀

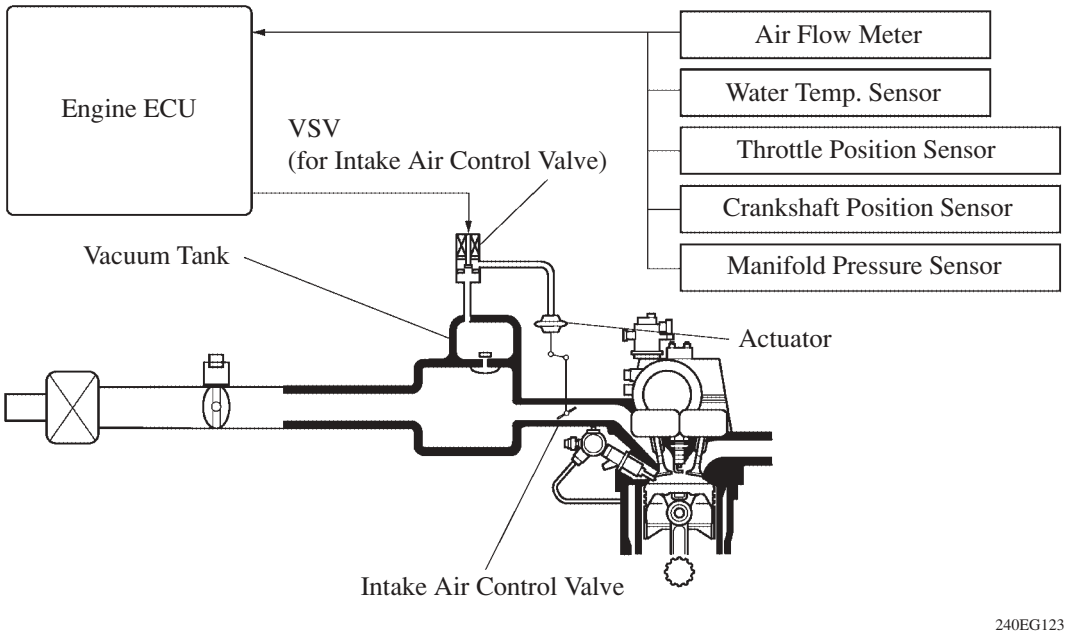

14) TWC Warm-up Control

While a cold engine is being started, this control regulates the ignition timing and the throttle valve in order to improve the warm-up performance of the TWC (Three-Way Catalytic Converter).
The engine ECU effects this control based on the signals from the water temperature sensor and the brake booster pressure sensor.

- When the water temperature is below a predetermined value, the engine ECU retards the ignition timing to the maximum level in order to raise the exhaust gas temperature. Consequently, the high-temperature exhaust gas, which is in the middle of combustion, flows into the exhaust manifold, in order to warm up the TWC at an early stage.
- Retarding the ignition timing to the maximum level will reduce combustion efficiency. Therefore, the engine ECU opens the throttle valve in order to prevent the engine output from decreasing. The intake manifold vacuum pressure decreases at this time. Therefore, the engine ECU monitors the brake booster pressure, and if this pressure is too low, the ECU reduces the amount of retard of the ignition timing and shortens the control duration in order to prevent the vacuum pressure from dropping.

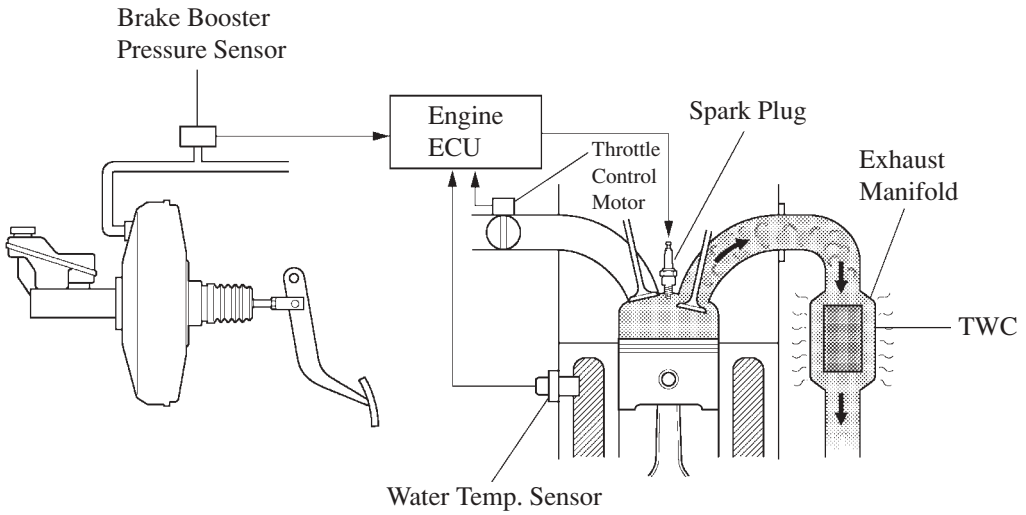

15) Diagnosis

- The diagnosis system of the 2AZ-FSE engine uses the EURO-OBD (Europe On-Board Diagnosis) that complies with European regulations.
- When the engine ECU detects a malfunction, the engine ECU makes a diagnosis and memorizes the failed section. Furthermore, the check engine warning light in the combination meter illuminates or blinks to inform the driver.
- At the same time, the DTCs (Diagnostic Trouble Codes) are stored in memory. The DTCs can be read by connecting a hand-held tester.
- The DTCs have been further divided to correspond to SAE codes.
- For details, see the Avensis Repair Manual Supplement (Pub. No. RM1045E).

Service Tip

To clear the DTC that is stored in the Engine ECU, use a hand-held tester or disconnect the battery terminal or remove the EFI fuse for 1 minute or longer.

16) Fail-Safe

When the Engine ECU detects a malfunction, the Engine ECU stops or controls the engine according to the data already stored in the memory as the following conditions.

▶ Fail-Safe Control List ◀

DTC	Fail-safe Operation	Fail-safe Deactivation Conditions
P0031, P0032, P0037, P0038, P0051, P0052, P0057, P0058	Faulty heater circuit is turned off.	Ignition switch OFF
P0100, P0102, P0103	Ignition timing is calculated based on an engine speed and a throttle opening angle.	"Pass" detection has occurred. Upon this occurrence, the engine ECU will return to normal mode.
P0105, P0107, P0108	● Intake air pressure is controlled with a calculated value in proportion to the throttle opening angle and the engine speed. ● Limit the engine speed to 3,000 rpm or less.	"Pass" detection has occurred. Upon this occurrence, the engine ECU will return to normal mode.
P0110, P0112, P0113	Intake air temperature is fixed at 20°C (68°F).	"Pass" detection has occurred. Upon this occurrence, the engine ECU will return to normal mode.
P0115, P0117, P0118	Water temperature is fixed at 80°C (176°F).	"Pass" detection has occurred. Upon this occurrence, the engine ECU will return to normal mode.
P0120, P0121, P0122, P0123, P0220, P0222, P0223, P2135	Turn off the power for the throttle motor, return the throttle valve in position using the return spring, and fuel cut intermittent.	Repeat the following conditions at least 2 seconds or more with the throttle position switch closed: ● 0.1 V less than VTA less than 0.95 V ● Engine speed is 0 km/h
P0190, P0191	● Stop the high-pressure pump operation. ● Limit the engine speed to 2,000 rpm or less.	After it is returned to normal condition, turn the ignition switch ON.

(Continue)

DTC	Fail-safe Operation	Fail-safe Deactivation Conditions
P0200	Turn off the INJ relay and cut the power for the EDU.	After it is returned to normal condition, turn the ignition switch ON.
P0201, P0202, P0203, P0204	● Stop fuel injection for an abnormal cylinder and related other cylinders. ● Limit the engine speed to 3,000 rpm or less.	
P0325, P0327, P0328	Maximum timing retardation	Ignition switch OFF
P0351, P0352, P0353, P0354	Stop fuel injection for all the cylinders.	"Pass" detection has occurred. Upon this occurrence, the engine ECU will return to normal mode.
P0604, P0606, P0607, P0657	Turn off the power for the throttle motor, return the throttle valve in position using the return spring, and fuel cut intermittent.	After it is returned to normal condition, turn the ignition switch ON.
P1235	● Stop the high-pressure pump operation. ● Limit the engine speed to 2,000 rpm or less.	After it is returned to normal condition, turn the ignition switch ON.
P2008	Force IACV to close.	After it is returned to normal condition, turn the ignition switch ON.
P2102, P2103, P2111, P2112, P2118, P2119	Turn off the power for the throttle motor, return the throttle valve in position using the return spring, and fuel cut intermittent.	After it is returned to normal condition, turn the ignition switch ON.

■ 1CD-FTV ENGINE with D-CAT

1. General

Based on the 1CD-FTV engine which complies with the Step-IV exhaust gas emission regulations in Europe, the 1CD-FTV engine with D-CAT has adopted D-CAT (Diesel Clean Advanced Technology) in order to realize exhaust gas reduction performance that surpasses the Step-IV standards.

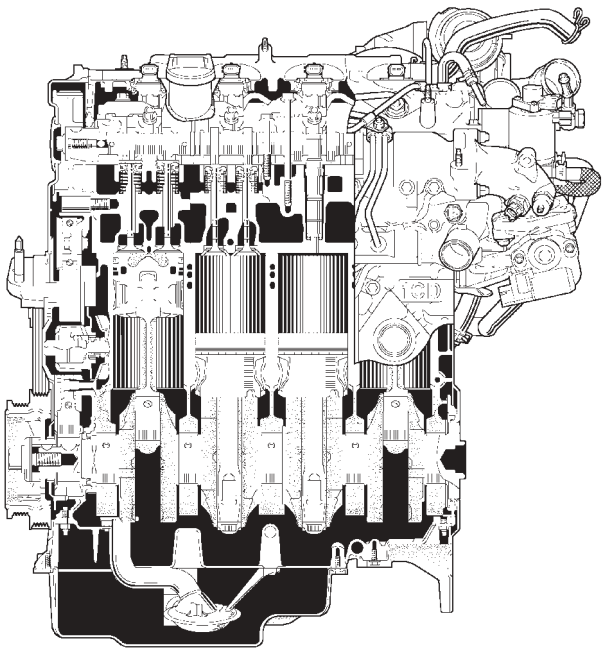

258AE01

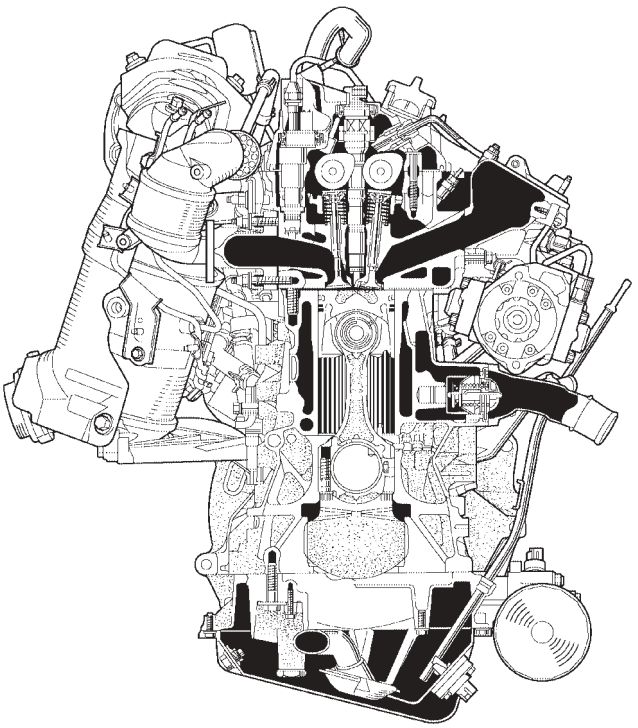

258AE02

▶ Engine Specification ◀

Model			1CD-FTV (With D-CAT)	1CD-FTV (Without D-CAT)
No. of Cyls. & Arrangement			4-Cylinder, In-line	←
Valve Mechanism			16-Valve DOHC, Belt and Gear Drive	←
Combustion Chamber			Direction Injection Type	←
Manifolds			Cross-Flow	←
Fuel System			Common-Rail Type	←
Displacement cm^3 (cu. in.)			1995 (121.7)	←
Bore x Stroke mm (in.)			82.2 x 94.0 (3.24 x 3.7)	←
Compression Ratio			17.8 : 1	←
Max. Output [EEC]			85 kW @ 3600 rpm	←
Max. Torque [EEC]			280 N·m @ 2000 – 2200 rpm	←
Valve Timing	Intake	Open	2° BTDC	←
		Close	31° ABDC	←
	Exhaust	Open	51° BBDC	←
		Close	0° ATDC	←
Firing Order			1 – 3 – 4 – 2	←
Fuel Cetane Number			48 or more	←
Emission Regulation			European Post-STEP IV	←
Oil Grade			ACEA B1, API CF-4 or CF	←
Engine Service Mass* (Reference) kg (lb)			206 (454,2)	203 (447.5)

*: Weight shows the figure with oil and water fully filled.

▶ Valve Timing ◀

: Intake Valve Opening Angle

: Exhaust Valve Opening Angle

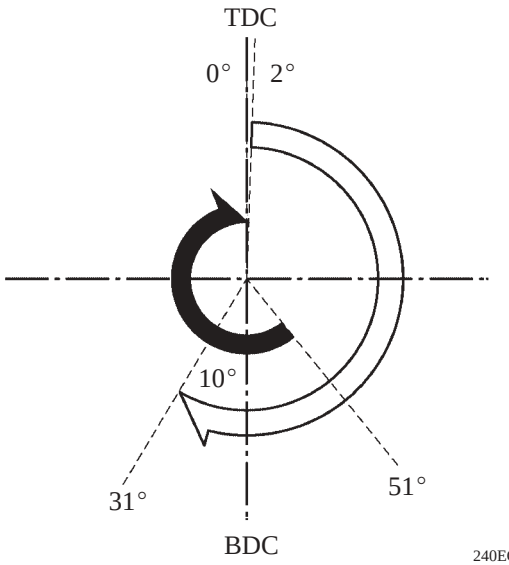

240EG95

2. D-CAT System

"D-CAT (Diesel Clean Advanced Technology)" is a concept that is used for the technology that comprehensively controls the engine (including the catalyst, combustion, and fuel injection systems) for the purpose of simultaneously reducing PM (Particulate Matter) and NOx (Nitric Oxide), which are emitted by diesel engines.

DPNR is one of the newest system in D-CAT Concept.

▶ System Diaphragm ◀

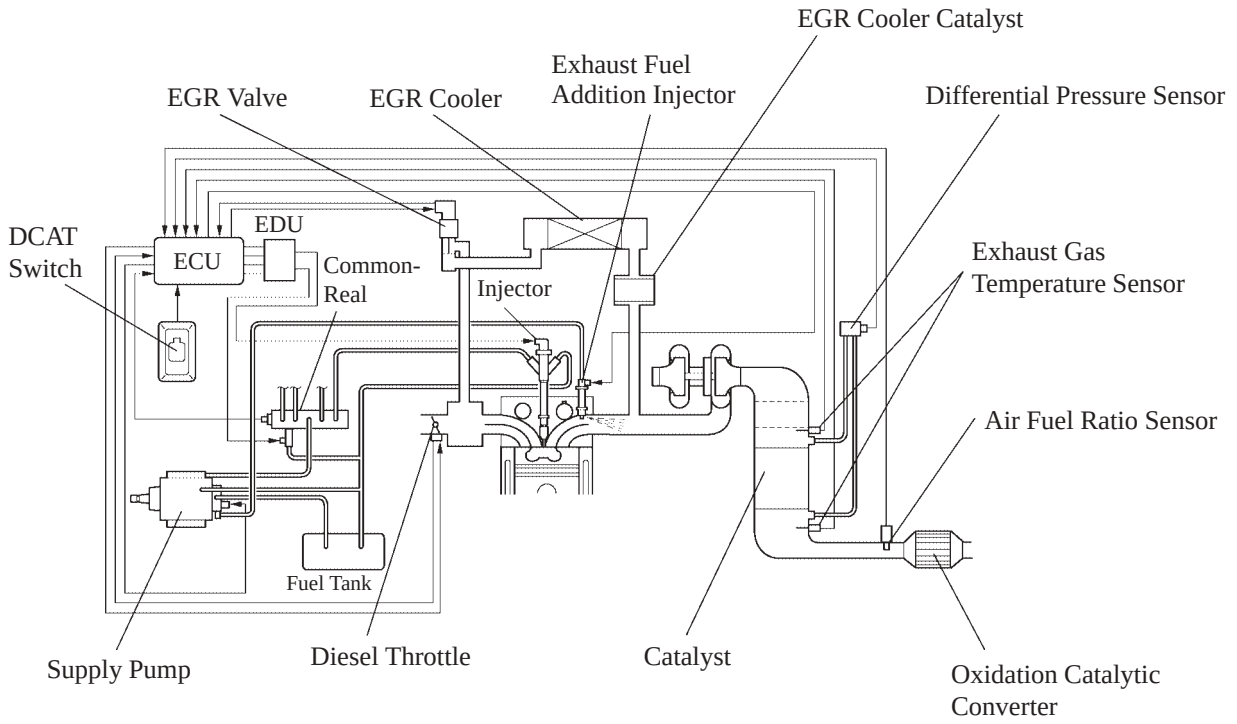

258AE03

- A low-temperature diesel combustion system, which reduces NOx emissions by lowering the temperature of the combustion, has been adopted.
- An exhaust fuel addition injector has been added to the exhaust manifold. This injector supplies additional fuel into the exhaust manifold for the purpose of reducing NOx that is adsorbed in the DPNR catalyst, recovering PM, and for sulphur poison recovery.
- The 1CD-FTV engine with D-CAT uses the same oxidation catalytic converter as the 1CD-FTV engine without D-CAT in order to reduce the HC and CO in the exhaust gases.

DPNR (Diesel Particulate - NOx Reduction) catalyst

The DPNR catalyst simultaneously reduces PM and NOx, in addition to reducing HC and CO as in the oxidation catalyst.

- The base material is shaped like a bunch of pipes with inlets and outlets that are plugged alternately. The surface of the base material is coated with an adsorption-reduction type catalyst.
- A new, wall-flow type ceramic base material has been adopted. The fine PM elements become adsorbed in this material as the exhaust gases flow through the small holes in the wall.

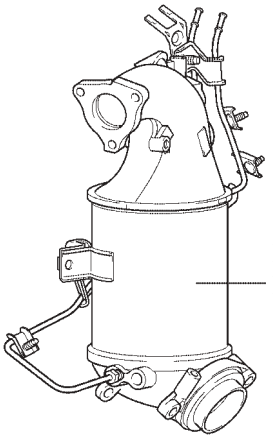

258AE20

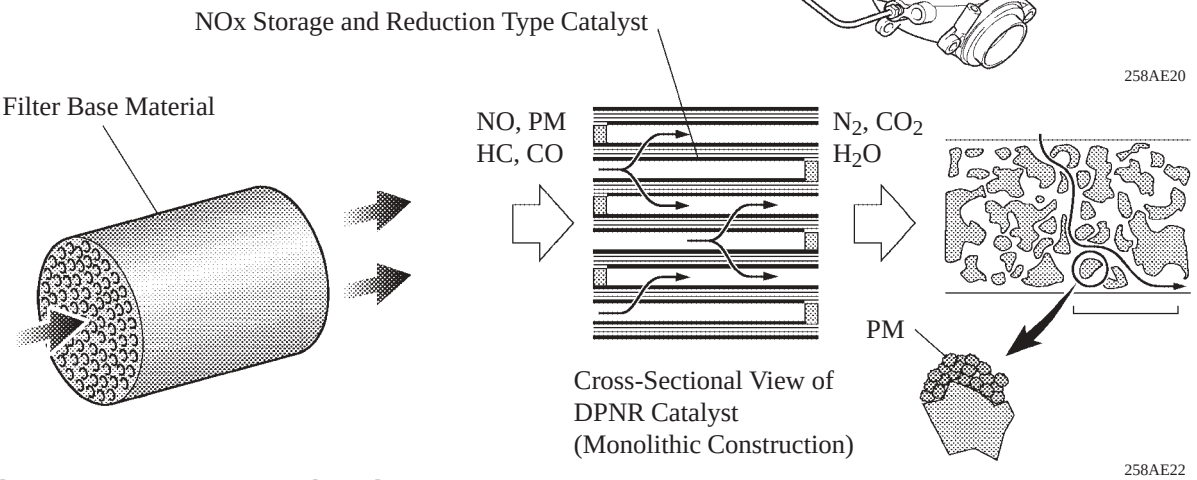

258AE22

Low-temperature combustion

- In the conventional diesel engine, increasing the EGR gas decreases the amount of oxygen, which leads to increased smoke emission. However, the low-temperature combustion has adopted a highly efficient EGR system and a highly precise fuel injection timing control in order to further increase the EGR gas and make the air-fuel ratio even richer. As a result, the ambient combustion temperature decreases, which rapidly reduces the amount of smoke emission.
- The reduction of the ambient combustion temperature also reduces NOx and combustion noise. On the other hand, the amount of CO and HC emissions increases. These CO and HC emissions and the large amount of EGR gas cause the temperature of the catalyst to rise in order to ensure the proper catalyst temperature while the vehicle operates under low-load conditions.

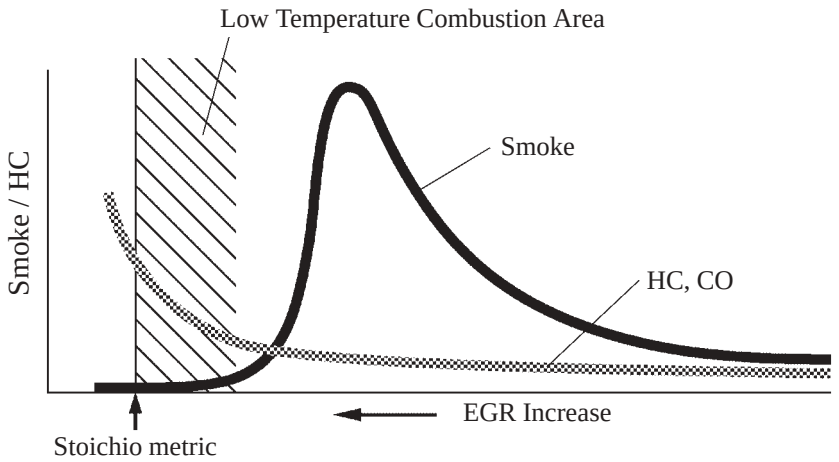

258AE43

Exhaust Fuel Addition System

- An exhaust fuel addition injector has been installed on the No. 4 exhaust port of the cylinder head. This injector supplies additional fuel into the No. 4 exhaust port for the purpose of realizing fuel enrichment (in order to reduce NOx), and maintains the proper catalyst temperature for the purpose of PM (Particulate Matter) recovery and sulphur poison recovery.
- The feed pump portion of the common-rail supply pump supplies fuel to this injector.

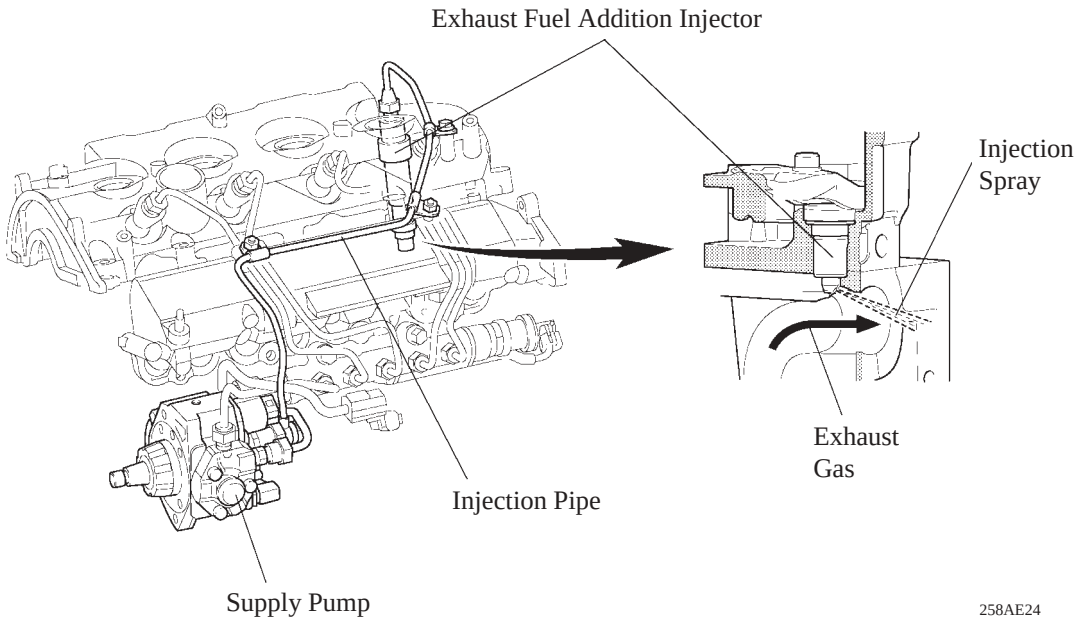

3. Major Difference

The following changes have been made to the 1CD-FTV engine with D-CAT from the 1CD-FTV engine without D-CAT:

Item		Outline
Engine Proper (See page 73)	Cylinder Head Cover	Addition of a hole and an oil seal for installing the exhaust fuel addition injector
	Cylinder Head	Addition of an area for mounting the exhaust fuel addition injector above the No. 4 exhaust port
	Cylinder Head Gasket	Change in the seal locations to accommodate the installation of the exhaust fuel addition injector
Intake and Exhaust System (See page 74)	Diesel Throttle Valve	Change to a rotary solenoid type
	EGR Valve	Change to a linear solenoid type
	EGR Cooler	Addition of a catalyst in front of the EGR cooler
	Turbocharger	Improved performance
	Exhaust Manifold	Improvement of sealing performance
	Exhaust Pipe	Change to support the installation of the DPNR-Cat differential pressure sensor
	Exhaust Manifold Converter	Adoption of tandem catalysts
Fuel System (See page 77)	Exhaust Fuel Addition Injector	Addition of an exhaust fuel addition injector to the exhaust manifold
	No.3 Fuel Pipe	New provision for supplying fuel to the exhaust fuel addition injector
	Common-Rail	Change of the maximum fuel pressure and addition of orifices to realize high precision fuel injection timing control
	Fuel Pipe Insulator	New provision of insulator to ensure heat resistance and reliability
	Supply Pump	Addition of a flow damper to realize low noise and vibration while supplying fuel to the exhaust fuel addition injector
Engine Control System (See page 80)	Differential Pressure Sensor	Addition for detecting the clogging of DPNR-Cat
	Exhaust Gas Temperature Sensor	Addition for detecting the temperature of the DPNR catalyst
	Air Fuel Ratio Sensor	Addition for detecting the air-fuel ratio after the DPNR catalyst

4. Features of 1CD-FTV Engine with D-CAT

The components of the 1CD-FTV engine with D-CAT feature the following characteristics: clean emission and low noise and vibration.

(1) Clean emission

(2) Low noise and vibration

Item		(1)	(2)
Intake and Exhaust System	Rotary type diesel throttle valve	○	
	Linear solenoid type EGR valve	○	
	Catalyst for EGR cooler	○	
	Countermeasure against exhaust gas leakage associated with the addition of the exhaust fuel addition injector and performance improvement.	○	
	Tandem catalysts for exhaust manifold converter	○	
Fuel System	Exhaust fuel addition injector	○	
	Flow damper at supply pump		○
Engine Control System	Differential pressure sensor	○	
	Exhaust gas temperature sensor	○	
	Air Fuel Ratio Sensor	○	

5. Engine Proper

Cylinder Head Cover

For the purpose of installing the exhaust fuel addition injector, the following changes have been made to the cylinder head:

(a) Addition of a hole for installing the exhaust fuel addition injector and an oil seal

(b) Addition of an oil seal for the fuel return outlet for main injector

(c) Addition of a fuel relief passage, which is used in case of fuel leakage from the exhaust fuel addition injector.

- Change in the seal line of the cylinder head cover gasket to accommodate the addition of the exhaust fuel addition injector

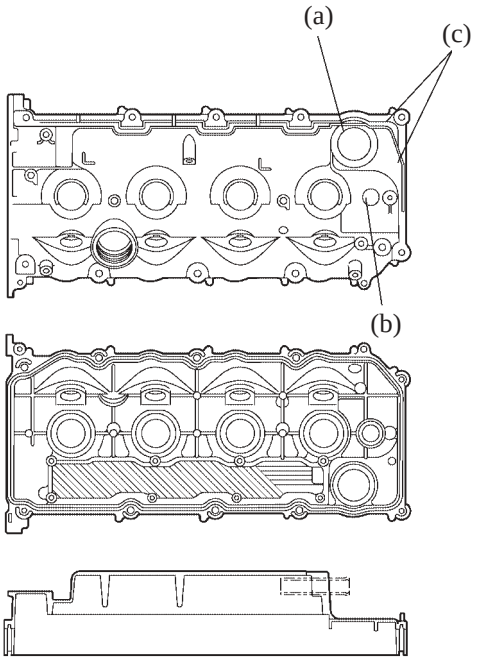

258AE05

Cylinder Head

- Addition of a hole for installing the exhaust fuel addition injector

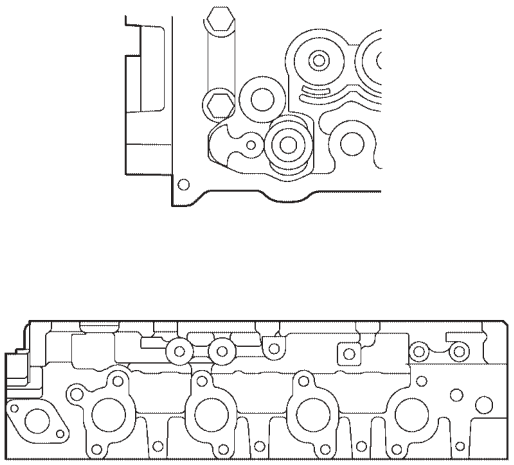

258AE06

Service Tip

To distinguish from the gasket for the 1CD-FTV engine without D-CAT, the gasket for the 1CD-FTV engine with D-CAT has a yellow mark. This prevents the wrong gasket from being installed.

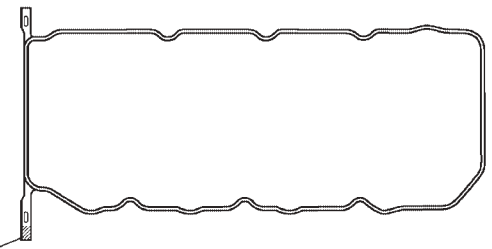

258AE07

6. Intake and Exhaust System

General

- The motor of the diesel throttle valve has been changed from a step motor type to a rotary solenoid type in order to attain quick reponse and to suppress smoke emissions.
- The EGR valve has been changed from the previous step motor type to a linear solenoid type in order to attain quick response and to suppress smoke emissions.
- A catalyst has been added in front of the EGR cooler.
- To enable the addition of fuel into the exhaust system, the sealing performance of the gasket between the turbocharger and the exhaust manifold has been improved.
- Along with the adoption of the D-CAT, the exhaust pipe routing, muffler capacity, muffler construction, and the catalyst size have been optimized.
- In D-CAT, the exhaust gas pressure increases when fuel is added into the exhaust manifold. Therefore, the sealing performance of various areas and the reliability of the bearings for the turbocharger have been ensured.

Diesel Throttle Valve

A rotary solenoid type motor has been adopted in the diesel throttle valve. This makes the throttle valve respond quickly.

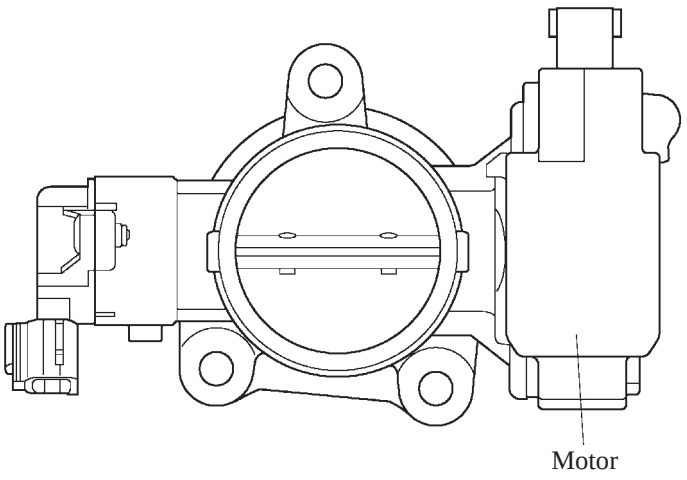

258AE09

EGR System

1) EGR Valve

- A linear solenoid type of EGR valve has been adopted. Also, a dual-valve mechanism has been adopted to enable the valve to respond quickly.

  In particular, this achieves the following:

  – Decreases the oxygen concentration level in the intake air.

  – Allows a large volume of EGR gas to flow by increasing the EGR flow rate.

  – Richens the air-fuel ratio in the exhaust gas.

  – Increases the catalyst temperature, which decreases the amount of smoke during acceleration.

- The dual-valve construction cancels the effects of the exhaust pressure during actuation, in order to realize quick response.
- An EGR valve position sensor has been newly provided. This sensor enables EGR valve control at a higher level of precision by detecting the amount of lift of the EGR valve.

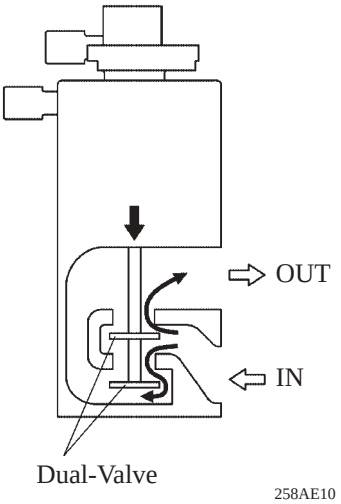

2) EGR Inlet Gasket

The gasket has been changed to accommodate the newly installed EGR valve.

Service Tip

An overhang has been provided on the gasket for the 1CD-FTV engine with D-CAT in order to distinguish it from the 1CD-FTV engine without D-CAT. This prevents the wrong gasket from being installed.

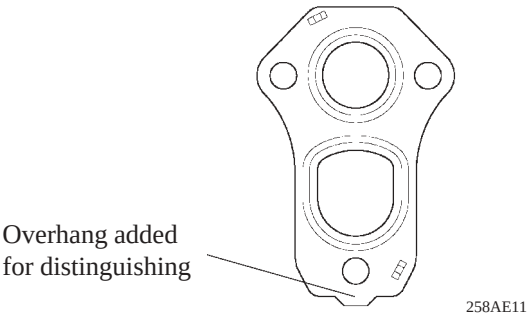

3) EGR Cooler & Cooler Catalyst

- A catalyst has been added in front of the EGR cooler.
- The passage diameter at the EGR cooler outlet has been increased in order to increase the flow rate of the EGR gas.
- A heat insulator has been provided at the catalyst area of the EGR cooler in order to prevent heat damage to the surrounding parts.

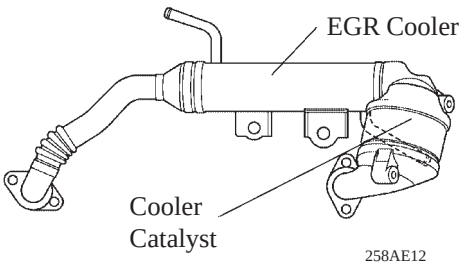

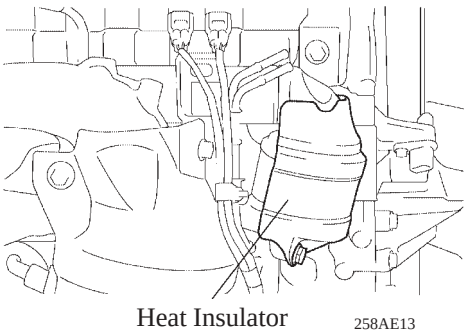

Turbocharger to Exhaust Manifold Gasket

- The sealing performance of the gasket between the turbocharger and the exhaust manifold has been improved.

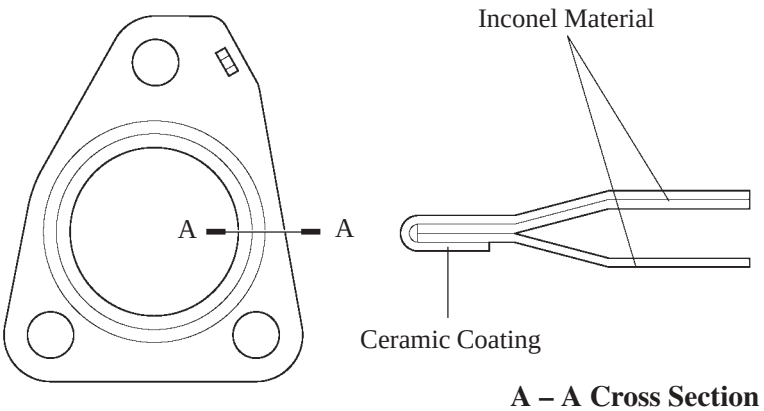

A – A Cross Section

258AE16

7. Fuel System

General

- The exhaust fuel addition injector has been added.
- Due to the addition of the exhaust fuel addition injector, a flow damper has been added to the fuel outlet of the supply pump.

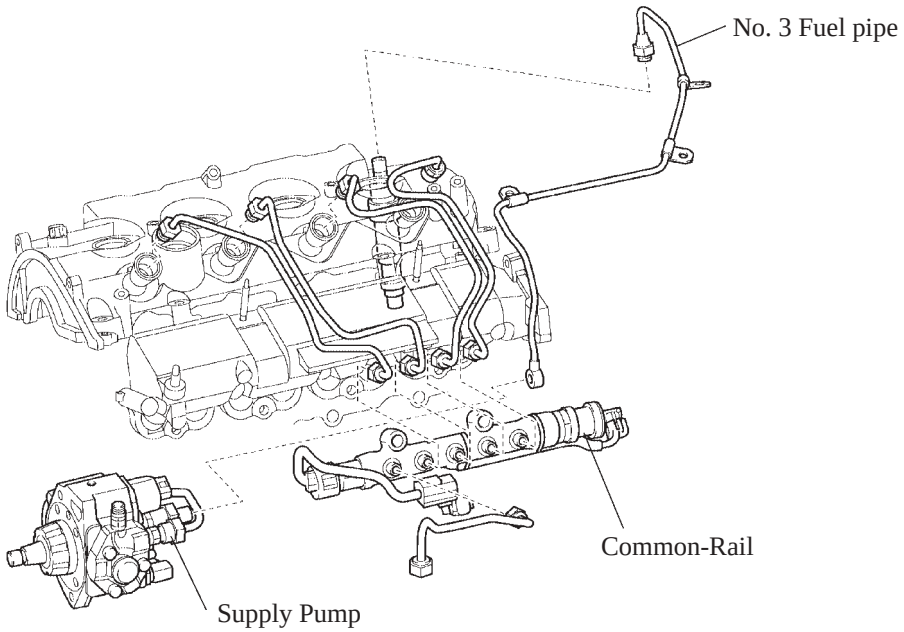

258AE26

Exhaust Fuel Addition Injector

- An exhaust fuel addition injector has been installed on the No. 4 exhaust port of the cylinder head. This injector supplies additional fuel into the No. 4 exhaust port for the purpose of realizing fuel enrichment (in order to reduce NOx), and maintains the proper catalyst temperature for the purpose of PM (Particulate Matter) recovery and sulphur poison recovery.

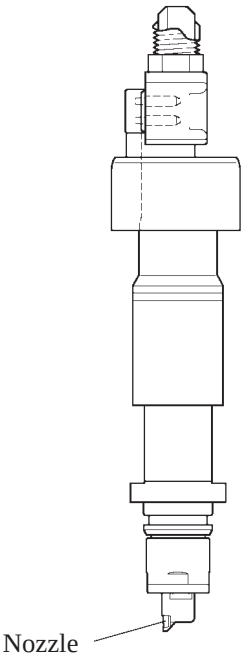

258AE25

Common-Rail

- To support the fuel injection timing control of the D-CAT, orifices have been added to the common-rail to enable high-precision injection control.
- The fuel pressure of the common-rail has been changed in order to clean emission.

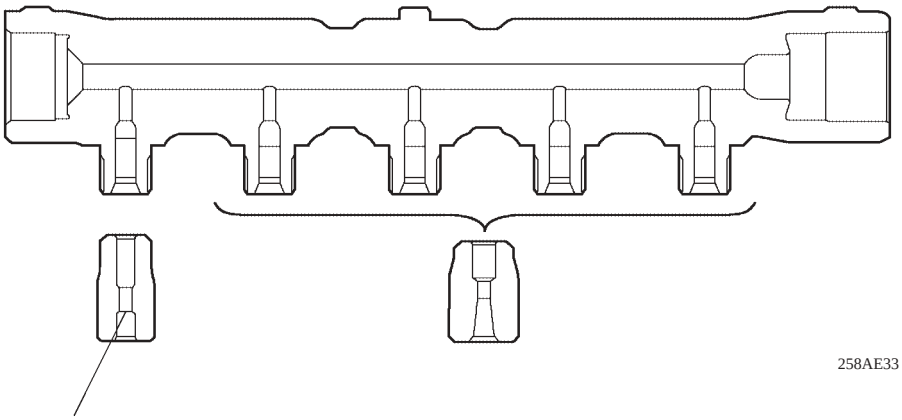

No. 3 Fuel Pipe

This is a high-pressure pipe that connects the exhaust fuel addition injector to the supply pump. Unlike other injection pipes, this injector does not connect to the common-rail. Instead, it connects directly to the supply pump.

- An insulator has been newly provided at the area where the fuel pipe for the exhaust fuel addition injector is tightened, in order to improve its heat resistance.

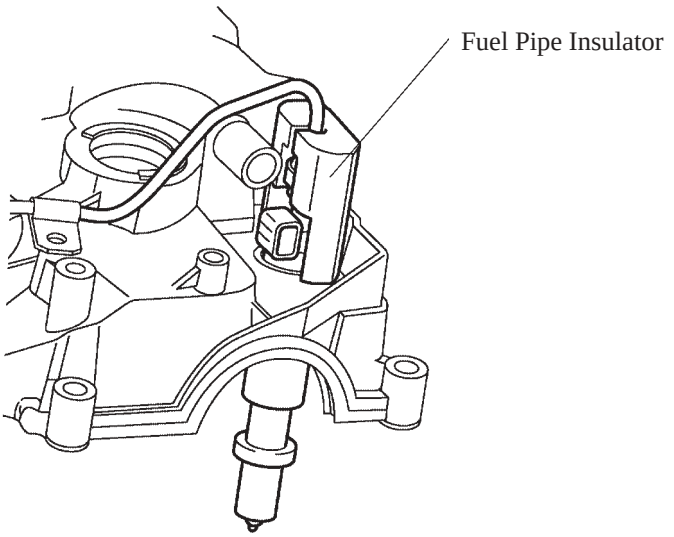

With insulator installed 258AE27

Supply Pump

1) General

The basic construction and operation of the supply pump are the same as the 1CD-FTV engine without D-CAT. However, a flow damper has been added to the fuel outlet area.

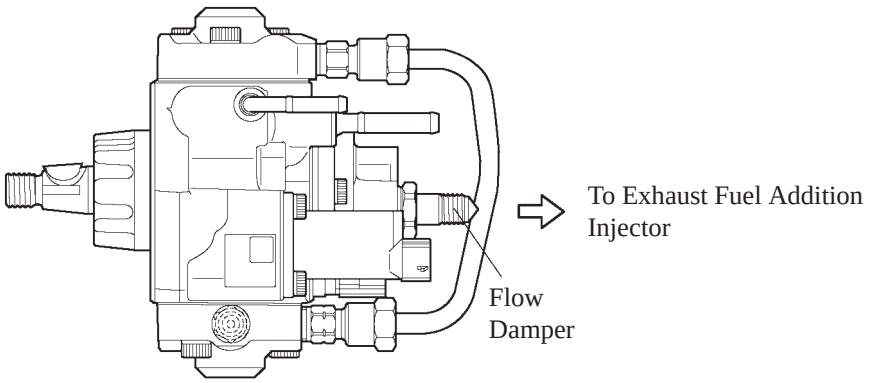

258AE30

2) Flow Damper

In accordance with the adoption of the exhaust fuel addition injector, the flow damper has been adopted in supply pump.

8. Engine Control System

General

Along with the adoption of the D-CAT, the following controls have been added:

▶ System Comparison List ◀

System	Outline	With D-CAT	Without D-CAT
Fuel Injection Volume Control	Based on the signals received from the sensors, the engine ECU determines the fuel injection volume in accordance with the engine condition.	○	○
Fuel Injection Timing Control	Based on the signals received from the sensors, the engine ECU determines the fuel injection timing in accordance with the engine condition.	○	○
DPNR Catalyst Support Control (See page 90)	Adds fuel into the exhaust gas in order to reduce PM and NOx.	○	—
Fuel Pressure Control	Based on the signals received from the sensors, the engine ECU determines the fuel pressure via SCV (Suction Control Valve) and pressure discharge valve in accordance with the engine condition.	○	○
Pilot Injection Control	Based on the signals received from the sensors, the engine ECU determines pilot injection volume/timing, and interval (between pilot injection and main injection) in accordance with the engine condition.	○	○
Idle Speed Control	The engine ECU determines the idle speed in accordance with the engine condition, and controls the fuel injection volume in order to maintain the target idle speed.	○	○
Glow Plug Control	Controls the length of time when the current is applied to the glow plugs, in accordance with engine coolant temperature.	○	○
EGR Control	Based on the signals received from the sensors, the engine ECU determines the EGR volume via EGR valve and intake restrictor valve in accordance with the engine condition.	○	○
Turbo Pressure Control	Based on the signals received from the sensors, the engine ECU controls the actuator via VRV in accordance with the engine condition.	○	○
Intake Restrictor Valve Control	Fully close the intake restrictor valve in order to reduce the vibration when the engine is stopped.	○	○
Air Conditioner Cut-off Control	By controlling the air conditioner compressor ON or OFF in accordance with the engine condition, drivability is maintained.	○	○
Engine Immobilizer	Prohibits fuel injection if an attempt is made to start the engine with an invalid ignition key.	○	○
Diagnosis (See page 91)	When the engine ECU detects a malfunction, the engine ECU di agnoses and memorizes the failed section.	○	○
Fail-Safe	When the engine ECU detects a malfunction, the engine ECU stops or controls the engine according to the data already stored in the memory.	○	○

Construction

The configuration of the engine control system is as shown in the following chart.

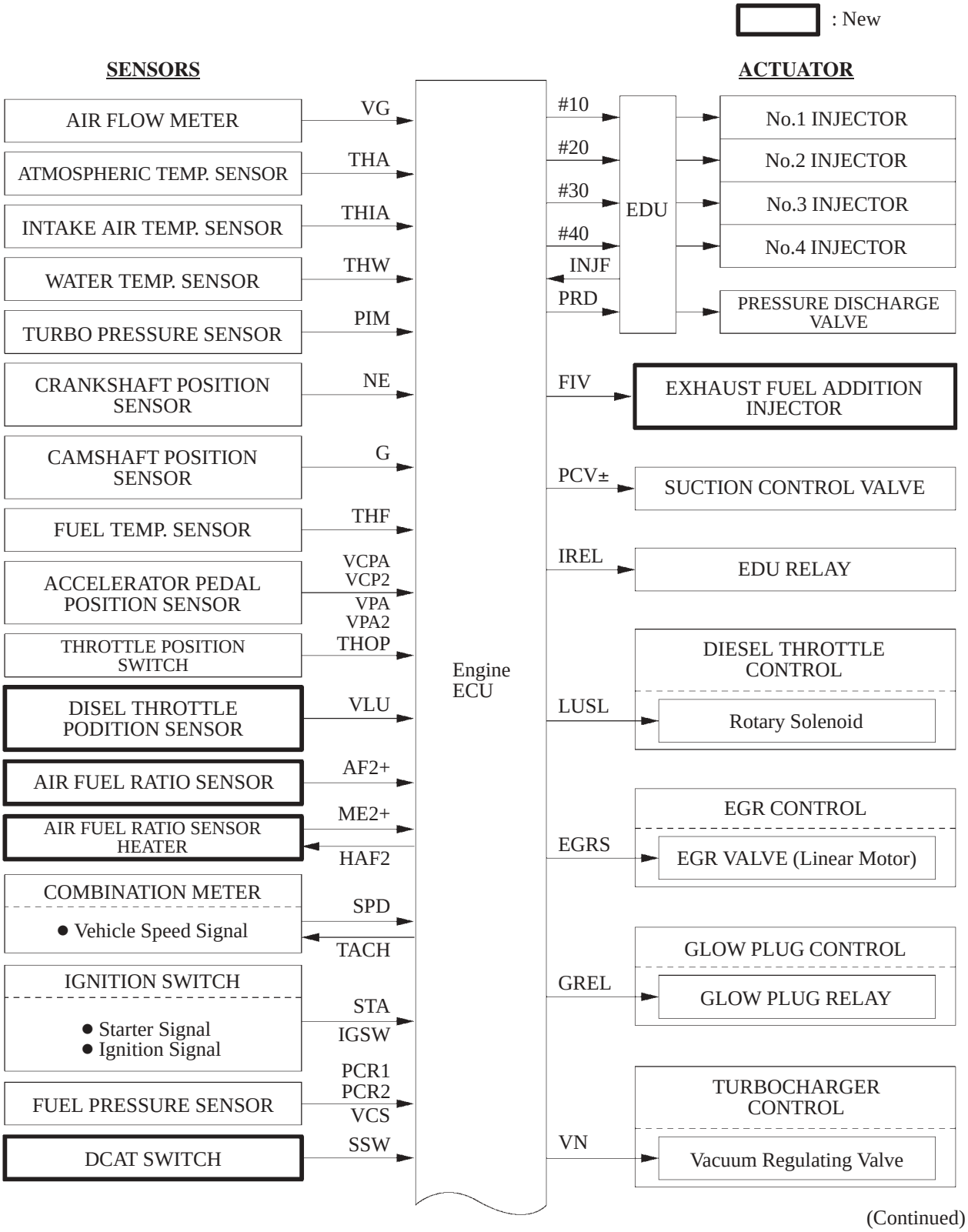

(Continued)

258AE35

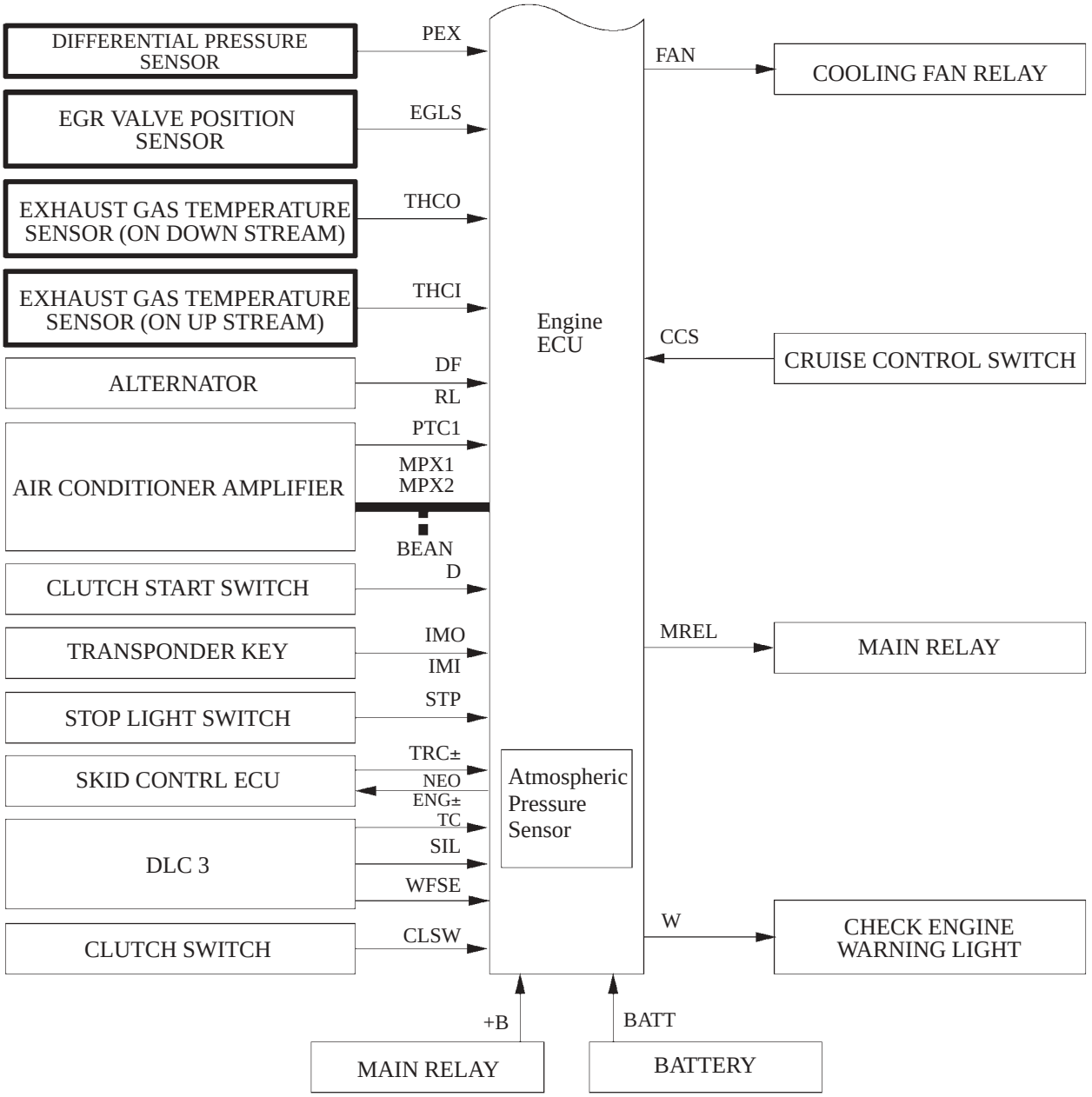
DIFFERENTIAL PRESSURE SENSOR
PEX
EGR VALVE POSITION SENSOR
EGLS
EXHAUST GAS TEMPERATURE SENSOR (ON DOWN STREAM)
THCO
EXHAUST GAS TEMPERATURE SENSOR (ON UP STREAM)
THCI
ALTERNATOR
DF
RL
AIR CONDITIONER AMPLIFIER
PTC1
MPX1
MPX2
BEAN
CLUTCH START SWITCH
D
TRANSPONDER KEY
IMO
IMI
STOP LIGHT SWITCH
STP
SKID CONTRL ECU
TRC±
NEO
ENG±
DLC 3
TC
SIL
WFSE
CLUTCH SWITCH
CLSW
Engine ECU
Atmospheric Pressure Sensor
FAN
COOLING FAN RELAY
CCS
CRUISE CONTROL SWITCH
MREL
MAIN RELAY
W
CHECK ENGINE WARNING LIGHT
+B
MAIN RELAY
BATT
BATTERY

258AE36

Engine Control System Diagram

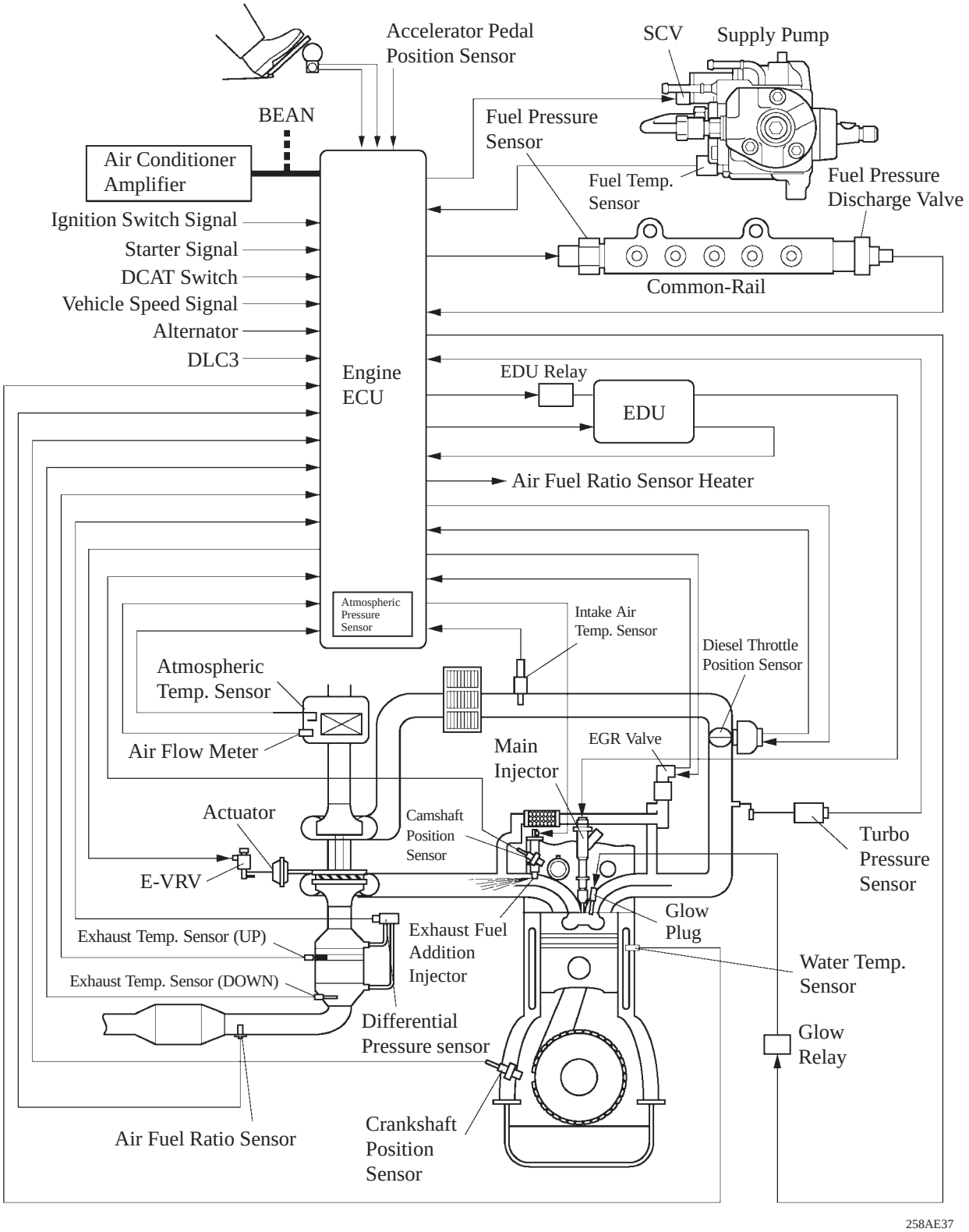

258AE37

Layout of Main Components

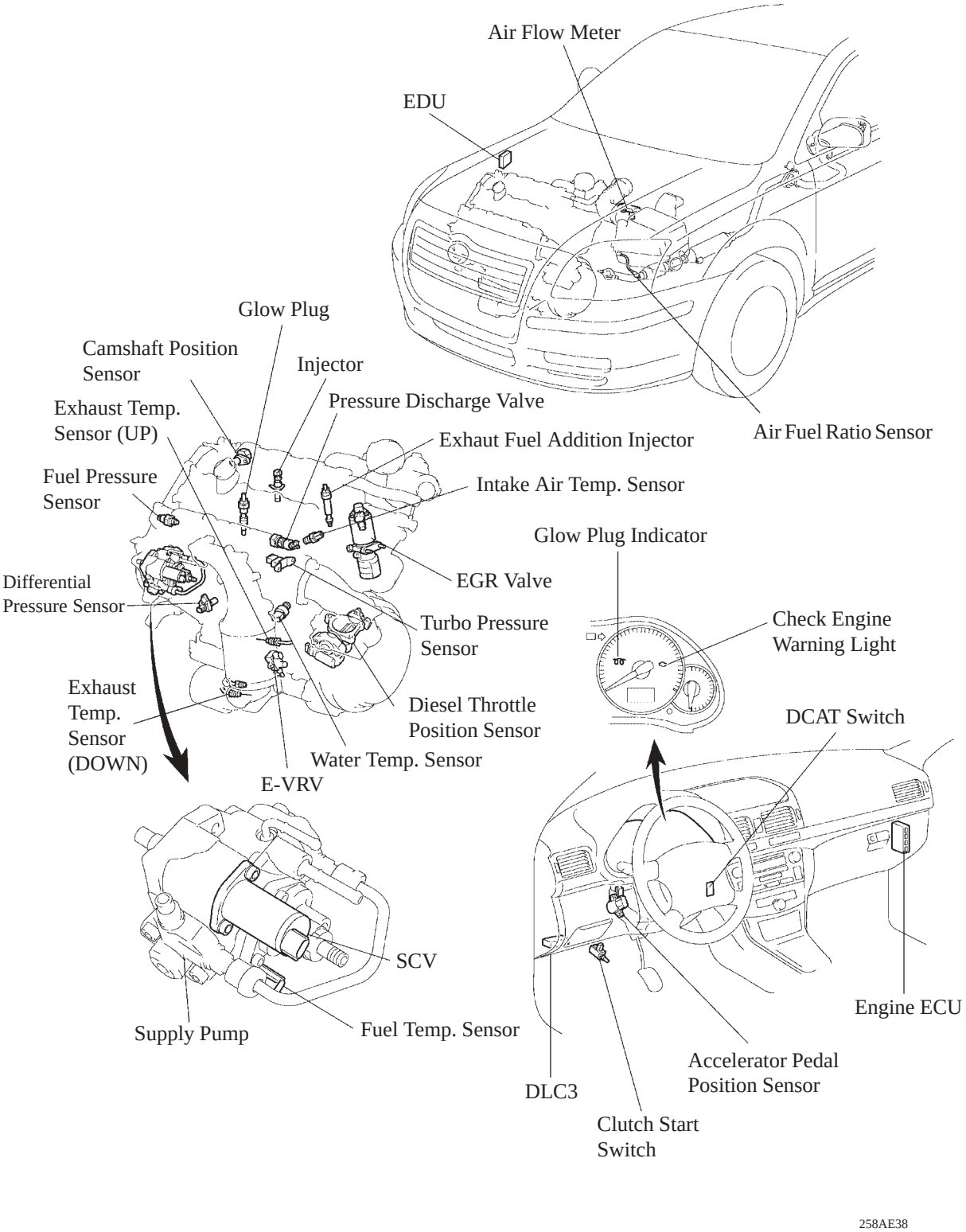

Main Components of Engine Control System

1) General

The main components of the 1CD-FTV engine With D-CAT control system are as follows:

: New

Components	Outline	Quantity	
		With D-CAT	Without D-CAT
Engine ECU	32-bit	1	←
Air Flow Meter	Hot- wire Type	1	←
Crankshaft Position Sensor (Rotor Teeth)	Pick-up Coil Type (36-2)	1	←
Camshaft Position Sensor (Rotor Teeth)	Pick-up Coil Type (1)	1	←
Accelerator Pedal Position Sensor	Linear Type	2 (Main, Sub)	←
Fuel Pressure Sensor	Semiconductor Strain Gauge Type (Two Circuits)	1	←
EDU	DC/DC Converter	1	←
Differential Pressure Sensor	Semiconductor Strain Gauge Type	1	—
Exhaust Gas Temperature Sensor (UP, DOWN)	Thermister Type	2	—
Air Fuel Ratio Sensor	Type with Heater (Cup Type)	1	—
EGR Valve Position Sensor	Contact point type	1	—
Diesel Throttle Position Sensor	Non-contact point type	1	—
DCAT Switch	DCAT Switch For switching to fuel with sulphur content	1	—

2) Differential Pressure Sensor

- The differential pressure sensor measures the pressure differences between front and back of the DPNR catalyst with PM in order to detect the clogging.
- The sensor is mounted on the side of the vehicle, where the effects of vibration are minimal. The DPNR catalyst and the sensor are connected with pipes.

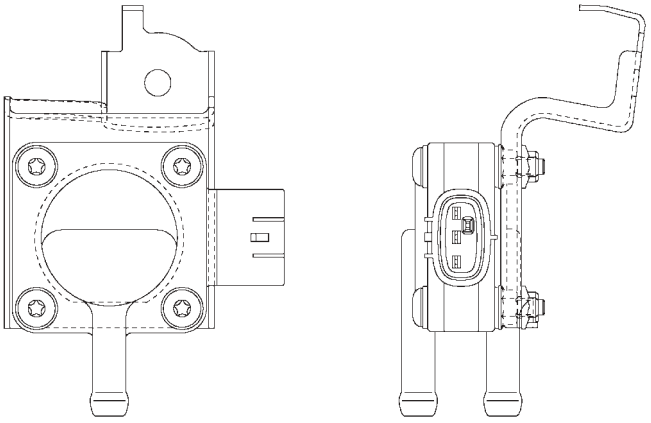

258AE50

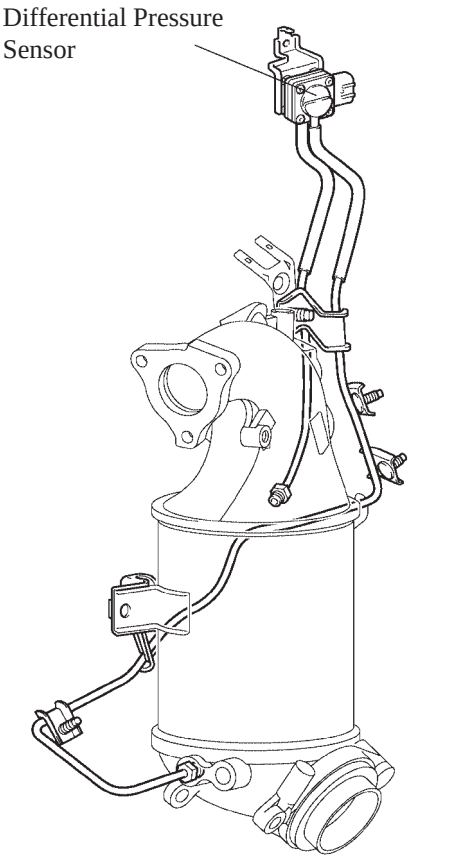

258AE39

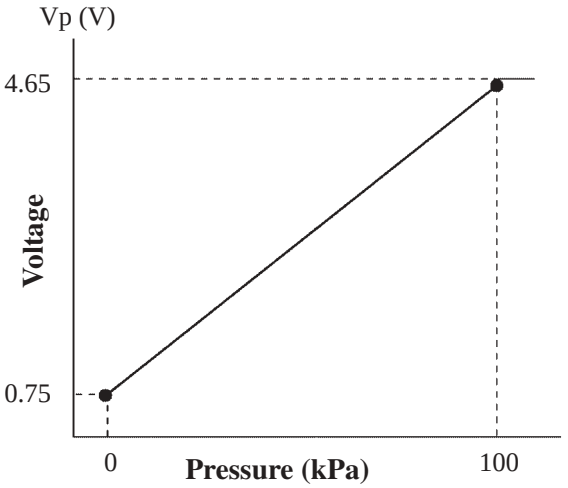

258AE49

3) Exhaust Gas Temp. Sensor

The exhaust gas temperature sensor, which is a thermister type, is installed in front and back of the DPNR catalyst, in order to detect the temperature of the catalyst.

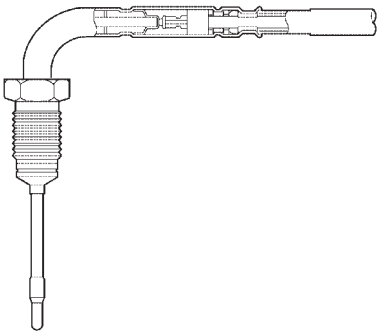

Exhaust Gas Temp. Sensor

258AE40

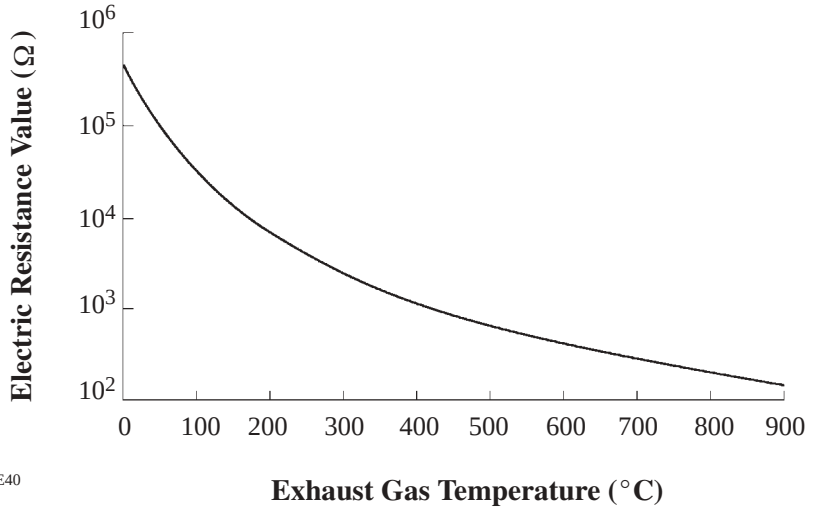

258AE41

4) Air Fuel Ratio Sensor

This sensor is based on a sensor that has been developed for gasoline engines. Its cover has been changed for diesel engine applications in order to eliminate the influences of the sensor temperature and the PM.

This sensor, which is mounted after the DPNR catalyst, detects the air-fuel ratio after the gases have been reduced.

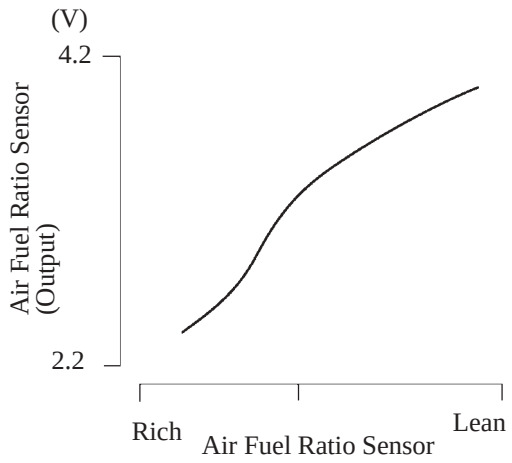

258EG59

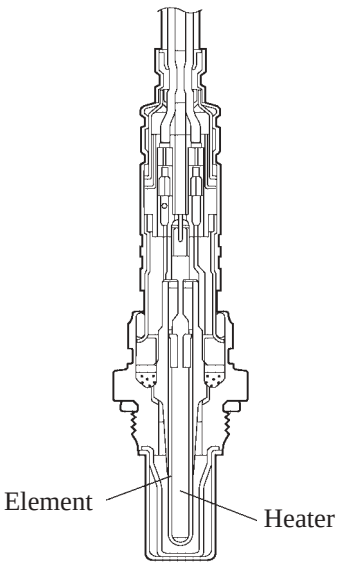

258AE55

5) EGR Position Sensor

EGR Position Sensor detects the amount of lift of the EGR valve and sends the corresponding signal to the engine ECU.

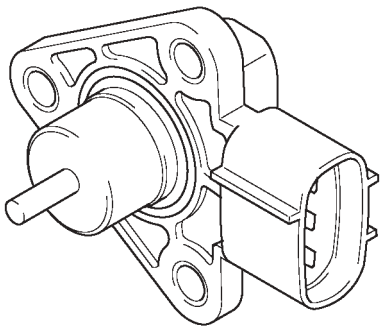

EGR Position Sensor

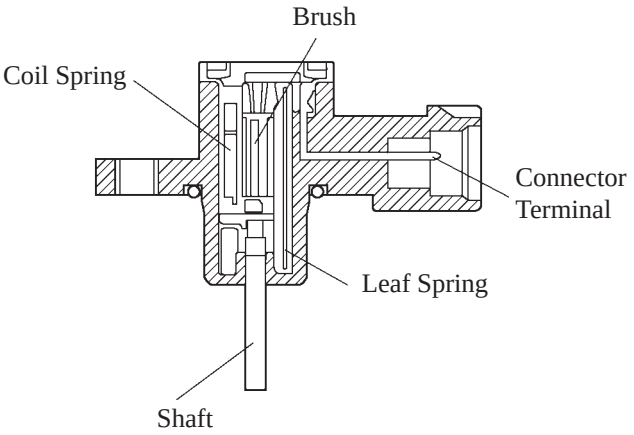

258AE52

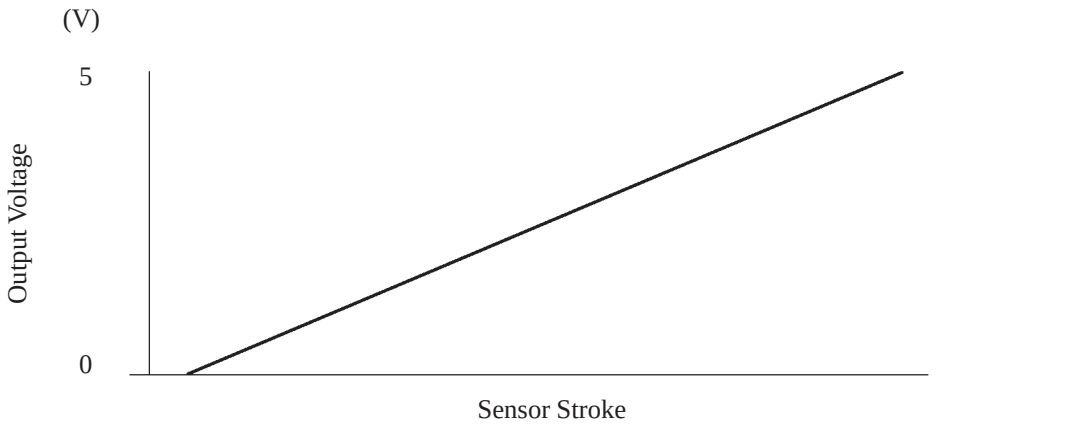

258AE53

6) Diesel Throttle Position Sensor

The Diesel throttle position sensor is mounted on the throttle body, to detect the opening angle of the throttle valve, the throttle position sensor converts the magnetic flux density that changes when the magnetic yoke (located on the same axis as the throttle shaft) rotates around the hall IC into electric signals to operate the throttle control motor.

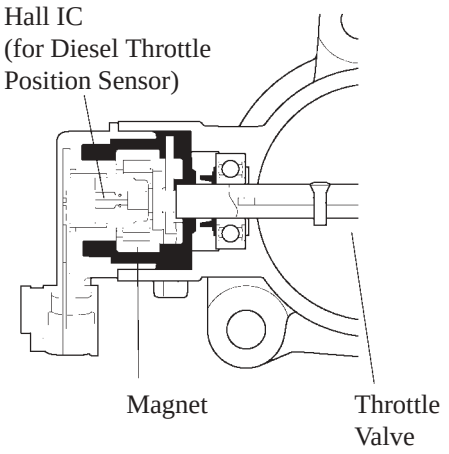

258AE62

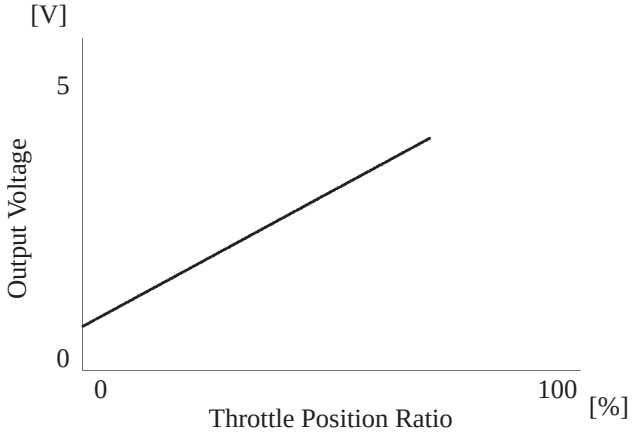

258AE61

7) DCAT Switch

The ability of this system is brought into full play through the use of low-sulphur diesel fuel. If high-sulphur diesel fuel must be used temporarily because low-sulphur diesel fuel is unavailable, the driver can turn this switch ON to minimize damage to the DPNR catalyst.

*: The map below shows the countries in which low-sulphur diesel fuel is available (as of September 2003).

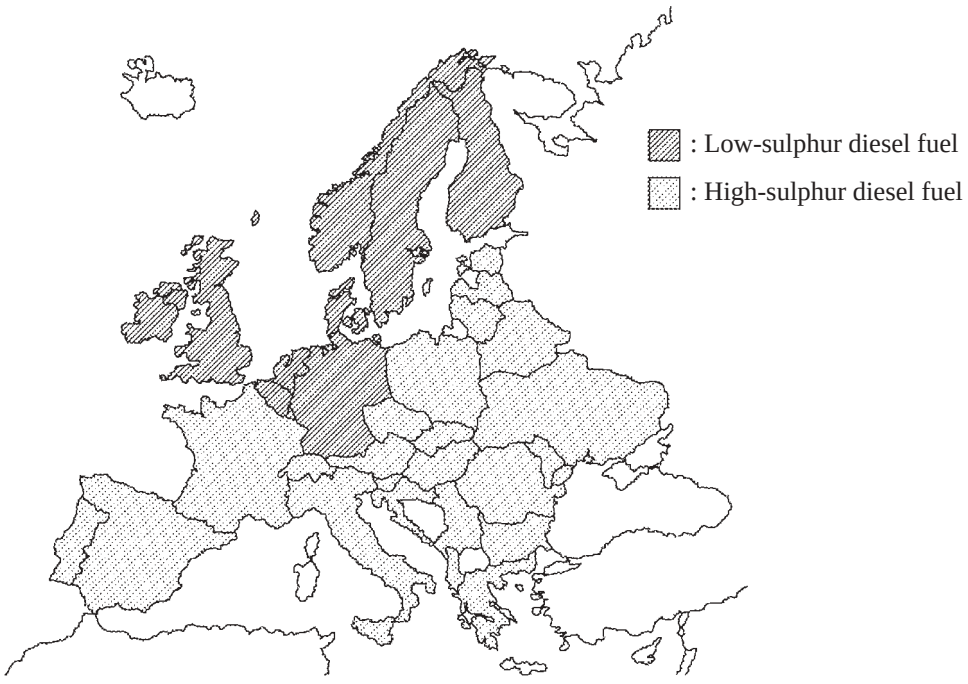

Fuel Availability Map

258AE64

DPNR Catalyst Support Control

1) General

The DPNR catalyst support control is divided into the following: during NOx storage, NOx reduction, PM reclaiming control, and sulphur poison recovery control.

DPNR catalyst support control	Air-fuel ratio control of exhaust gas	Main reduction substances	Main storage substances
During NOx storage	Lean	PM, HC, CO	NOx, SOx
During NOx reduction	Rich	NOx, PM, HC, CO	SOx
During PM reclaiming control	Lean	PM	—
During sulphur poison recovery control	Rich/Lean	SOx	—

2) During NOx storage

- Normally, the air-fuel ratio of the diesel engine is in the lean state, and the NOx becomes stored in the NOx storage material in the form of nitrate (NO_2).
- The active oxygen (O) that is created at that time oxidizes the PM. Thereafter, the excess oxygen from the surrounding area oxidizes the PM at once, which becomes discharged in the form of CO_2.

3) During NOx Reduction

- The air-fuel ratio of the exhaust gas is enriched momentarily by the EGR and the exhaust fuel addition. As a result, NO and a large amount of oxygen are created in the DPNR catalyst, and when the HC and CO in the exhaust gas increase, the NO becomes reduced to N_2 by HC and CO.
- At this time, the large amount of active oxygen that is created in the catalyst promotes the oxidation of the PM, which is discharged in the form of CO_2.

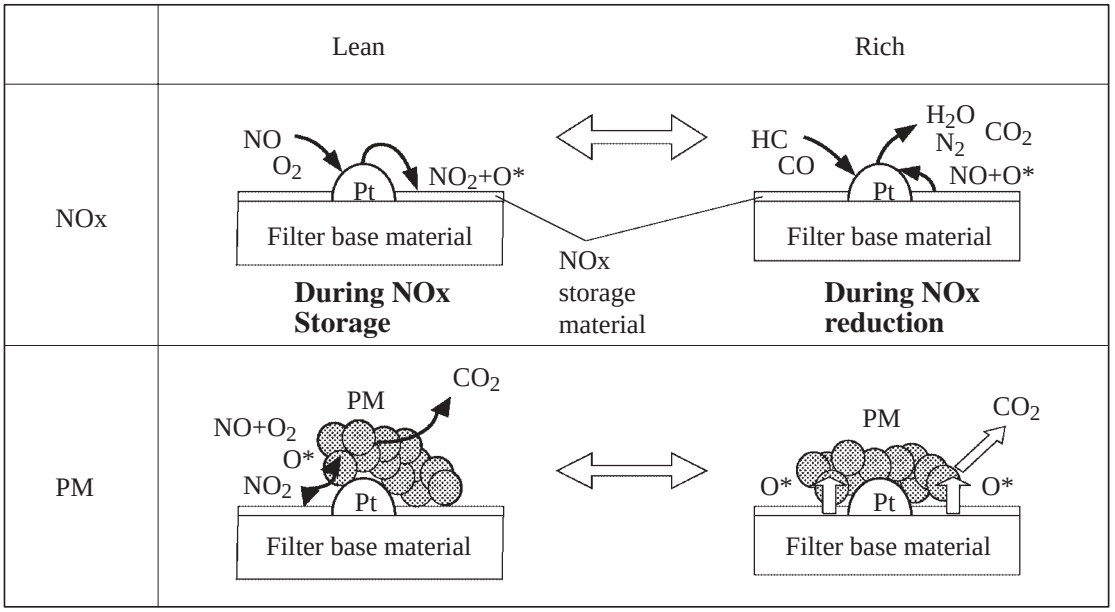

258AE23

Diagnosis

1) General

- The diagnosis system of the 1CD-FTV with D-CAT engine uses the EURO-OBD (Europe On-Board Diagnosis) that complies with European regulations.
- When the Engine ECU detects a malfunction, the Engine ECU makes a diagnosis and memorizes the failed section. Furthermore, the check engine warning light in the combination meter illuminates to inform the driver.
- At the same time, the DTCs (Diagnostic Trouble Codes) are stored in memory. The DTCs can be read by connecting a hand-held tester.
- The DTCs have been further divided to correspond to SAE codes.
- Along with the addition of the D-CAT, DTCs (Diagnostic Trouble Codes) have been added.
- For details, see the Avensis Repair Manual (Pub. No. RM1045E).

Fail-Safe

When the Engine ECU detects a malfunction, the Engine ECU stops or controls the engine according to the data already stored in the memory as the following conditions.

▶ Fail-Safe Control List ◀

: New

DTC	Fail-safe Operation	Fail-safe Deactivation Conditions
P0087	VTA is fixed at 10 %	IG OFF
P0088	VTA is fixed at 10 %.	IG OFF
P0093	After fail-safe driving control is performed for 1 minute, engine stalls.	IG OFF
P0095, P0097, P0098	Intake air temperature is fixed at 150°C (302°F).	Returned to normal condition
P0105, P0107, P0108	Turbo pressure is set at fixed value.	Returned to normal condition
P0115, P0117, P0118	When fuel temp. sensor operates normal and intake air temp. is less than 15°C (59°F), value of fuel temp. sensor is substituted. When fuel temp. sensor operates normal and intake air temp. is more than 20°C (68°F), value is fixed at 110°C (230°F). When the fuel temp. sensor is abnormal, value is fixed at 40°C (104°F).	Returned to normal condition
P0168	Out put limit	Returned to normal condition
P0180, P0182, P0183	Fuel temperature is fixed at 40°C (104.0°F).	Returned to normal condition
P0190, P0191, P0192, P0193	VTA is fixed at 10 %.	IG OFF
P0120, P0122, P0123	Open circuit in diesel throttle position sensor Accelerator opening limit at 30%	IG OFF
P0200	VTA is fixed at 25 %.	IG OFF
P0335	Out put limit	Returned to normal condition
P048	VTA is fixed at 25 %.	IG OFF
P0405, P0406	Open circuit in EGR position sensor Accelerator opening limit at 30%	IG OFF
P0500	Vehicle speed is fixed at 0 km/h (0 mph).	Vehicle speed ≧ 10 km/h (6 mph)
P1229	VTA is fixed at 10 %.	IG OFF
P1271	VTA is fixed at 25 %.	IG OFF
P1272	VTA is fixed at 25 %.	IG OFF
P1425, P1427 P1428	Open circuit in differential pressure sensor No operation occurs	—
P2120, P2122, P2123, P2125, P2127, P2128, P2138	Out put limit	+B OFF
P0544, P0545, P0546, P2031, P2032, P2033	Open circuit in exhaust gas temperature sensor Accelerator opening limit at 30%	IG OFF
P2047	Open circuit in exhaust fuel addition injector Accelerator opening limit at 30%	IG OFF

■U151E AUTOMATIC TRANSAXLE

1. General

U151E automatic transmission has been newly adopted on all the 2AZ-FSE engine models for Europe. These automatic transaxles newly developed, compact, lightweight, and high-capacity 5-speed Super ECT (Electronically Controlled Transaxle).

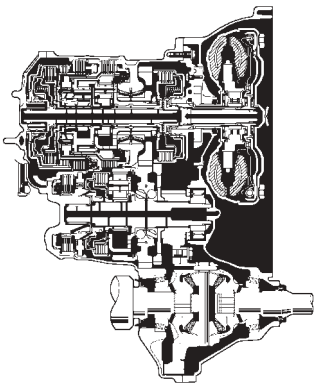

258AE107

U151E Automatic Transaxle

▶ Specifications ◀

Engine Type		2AZ-FSE	1AZ-FSE
Transaxle Type		U151E	U241E
Gear Ratio*1	1st	4.235	3.943
	2nd	2.360	2.197
	3rd	1.517	1.413
	4th	1.047	1.020
	5th	0.756	—
	Reverse	3.378	3.145
Differential Gear Ratio		3.478	2.923
Fluid Capacity	Liters (US qts, Imp. qts)	8.8 (9.3, 7.7)	8.6 (9.1, 7.6)
Fluid Type		ATF Type T-IV	←
Weight (Reference)*2	kg (lb)	98.3 (216.5)	88 (193.8)

*1: Counter Gear Ratio Included

*2: Weight shows the figure with the fluid fully filled.

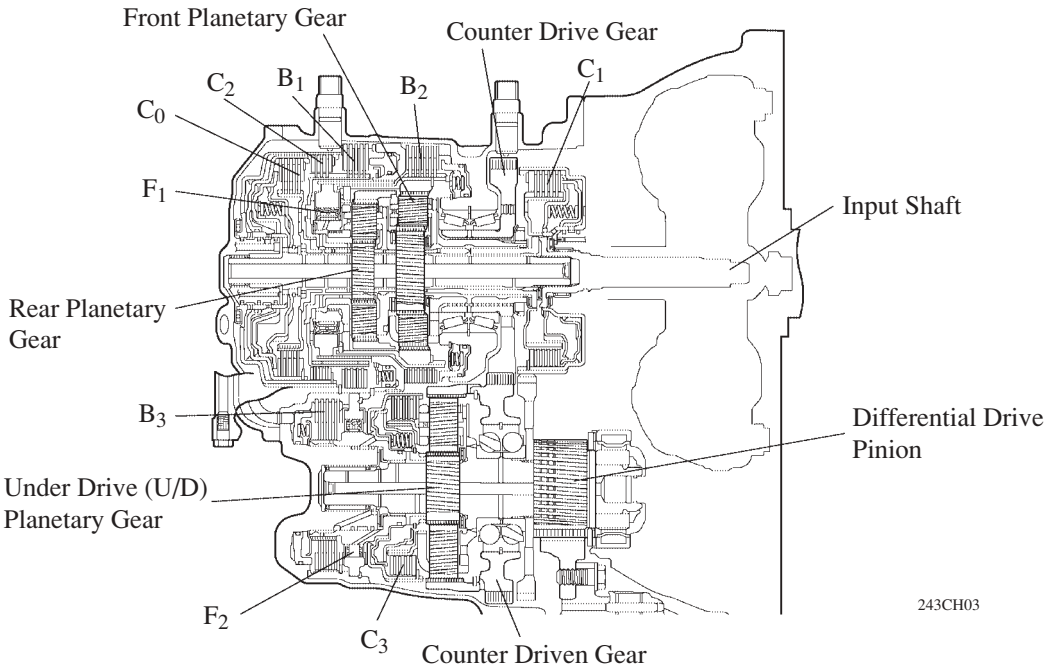

▶ Specifications ◀

Transaxle Type			U151E	U241E
C_1	Forward Clutch	The No. of Discs	5	4
C_2	Reverse Clutch		3	←
C_3	U/D Direct Clutch		3	←
C_0	Direct & O/D Clutch		4	—
B_1	2nd & O/D Brake		4	3
B_2	1st & Reverse Brake		6	5
B_3	U/D Brake		3	←
F_1	No.1 One-Way Clutch	The No. of Sprags	22	←
F_2	U/D One-Way Clutch		24	15
Front Planetary Gear		The No. of Sun Gear Teeth	43	←
		The No. of Pinion Gear Teeth	17	←
		The No. of Ring Gear Teeth	77	←
Rear Planetary Gear		The No. of Sun Gear Teeth	31	←
		The No. of Pinion Gear Teeth	19	←
		The No. of Ring Gear Teeth	69	←
U/D Planetary Gear		The No. of Sun Gear Teeth	35	32
		The No. of Pinion Gear Teeth	28	26
		The No. of Ring Gear Teeth	91	83
Counter Gear		The No. of Drive Gear Teeth	52	50
		The No. of Driven Gear Teeth	57	51

2. Torque Converter

- This torque converter has optimally designed fluid passages and impeller configuration resulting in substantially enhanced transmission efficiency to ensure better starting, acceleration and fuel economy.
- Furthermore, a hydraulically operated lock-up mechanism which cuts power transmission losses due to slippage at medium and high speeds is used.

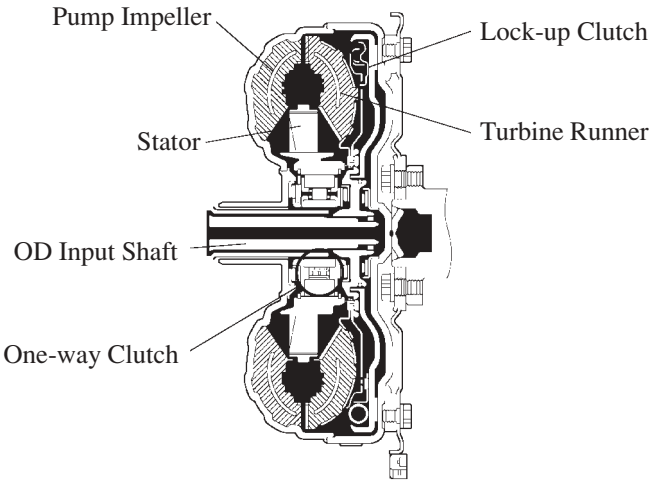

208CH02

▶ Specification ◀

Type	3-Element, 1-Step, 2-Phase (with Lock-up Mechanism)
Stall Torque Ratio	1.8

3. Oil Pump

The oil pump is combined with torque converter, lubricates the planetary gear units and supplies operating pressure to the hydraulic control.

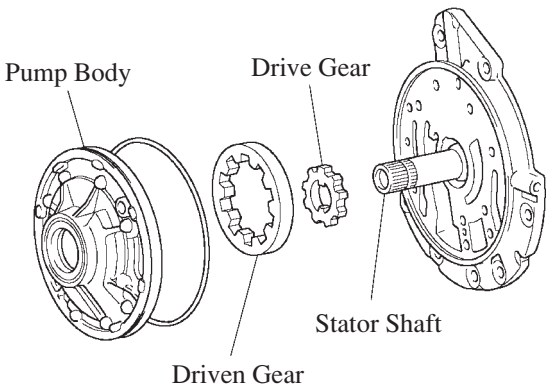

241CH85

▶ Specifications ◀

Gear	Gear Teeth
Drive Gear	9
Driven Gear	10

4. Planetary Gear Unit

Construction

- The counter drive and driven gears are placed in front of the front planetary gear and the under drive (U/D) planetary gear unit is placed above the counter shaft. Furthermore, the force transmission method has been changed by eliminating the brake and the one-way clutch. As a result, a torque capacity that accommodates the high output engine has been attained, while realizing a compact gear unit.
- The centrifugal fluid pressure canceling mechanism has been adopted in the C_0, C_2, C_3, and C_1 clutches that are applied when shifting from 2nd to 3rd and from 3rd to 4th. For details, refer to 97.

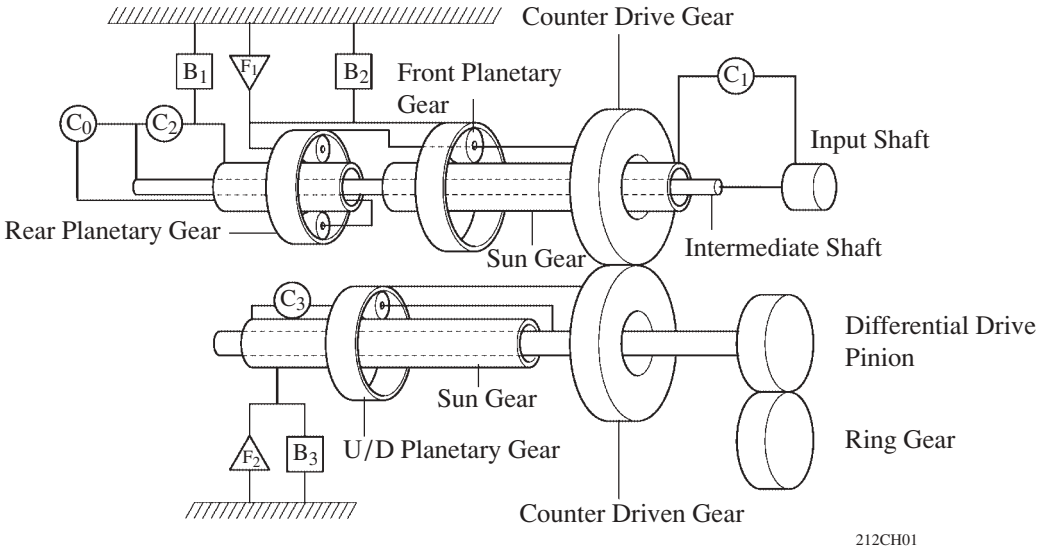

Function of Component

Component		Function
C_1	Forward Clutch	Connects input shaft and front planetary sun gear.
C_2	Reverse Clutch	Connects input shaft and rear planetary sun gear.
C_3	U/ Direct Clutch	Connects U/D sun gear and U/D planetary carrier.
C_0	Direct & O/D Clutch	Connects input shaft and rear planetary carrier.
B_1	2nd & O/D Brake	Prevents rear planetary sun gear from turning either clockwise or counterclockwise.
B_2	1st & Reverse Brake	Prevents rear planetary carrier and front planetary gear from turning either counterclockwise or clockwise.
B_3	U/D Brake	Prevents U/D planetary sun gear from turning either clockwise or counterclockwise.
F_1	No.1 One-Way Clutch	Prevents rear planetary carrier from turning counterclockwise.
F_2	U/D One-Way Clutch	Prevents U/D planetary sun gear from turning clockwise.
Planetary Gears		These gears change the route through which driving force is transmitted, in accordance with the operation of each clutch and brake, in order to increase or reduce the input and output speed.

Transaxle Power Flow

Shift Lever Position	Gear	Solenoid Valve						Clutch				Brake			One-way Clutch	
		S4	SR	DSL	SL1	SL2	SL3	C_0	C_1	C_2	C_3	B_1	B_2	B_3	F_1	F_2
P	Park				○	○								○		
R	Reverse				○	○				○			○	○		
N	Neutral				○	○								○		
D, S (5)*	1st				○	○			○					○	○	○
	2nd					○			○			○		○		○
	3rd		○	Δ	○			○	○					○		○
	4th		○	Δ		▲	○	○				○		○		○
	5th	○	○	Δ		▲	○	○			○	○				
S (4)*	1st				○	○			○					○	○	○
	2nd					○			○			○		○		○
	3rd		○	Δ	○			○	○					○		○
	4th		○	Δ		▲	○	○				○		○		○
S (3)*	1st				○	○			○					○	○	○
	2nd					○			○			○		○		○
	3rd		○	Δ	○			○	○					○		○
S (2)*	1st				○	○			○					○	○	○
	2nd					○			○			○		○		○
S (1)*	1st			○	○	○			○				○	○	○	○

○: ON Δ: Lock-up ON ▲: According to Hex Lock-up

*: When the shift lever position is "S" and the range position indicator shows "5", "4", "3", "2" and "1"

1) 1st Gear (D or S mode 2, 3, 4, 5 Position)

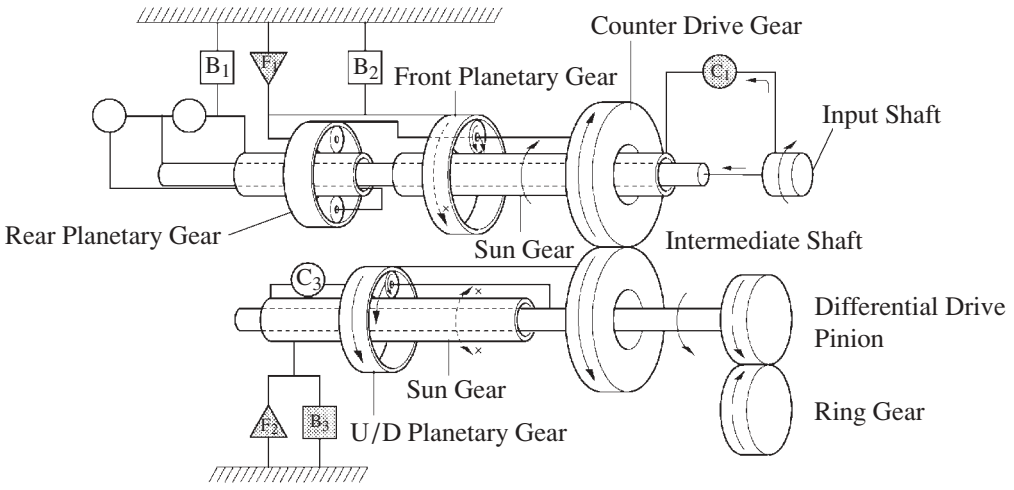

211CH04

2) 2nd Gear (D or S mode 2, 3, 4, 5 Position)

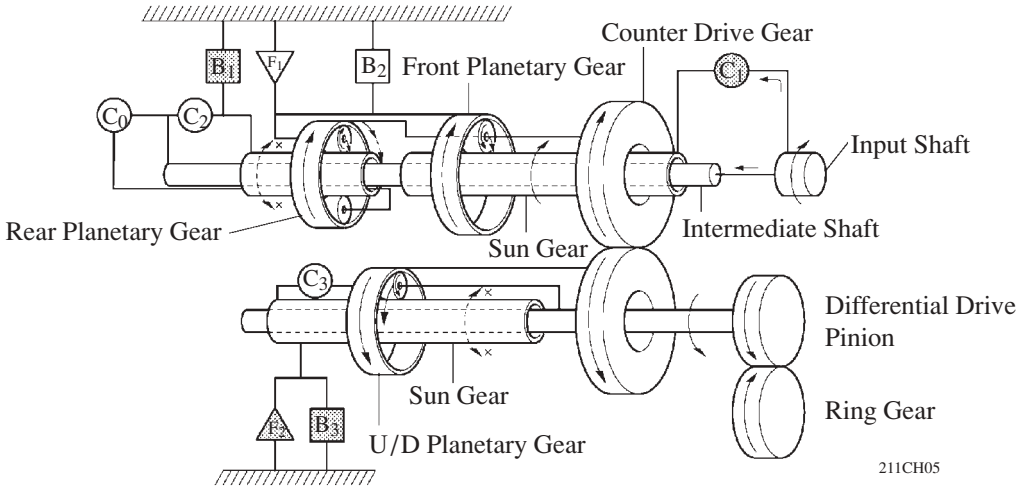

3) 3rd Gear (D or S mode 3, 4, 5 Position)

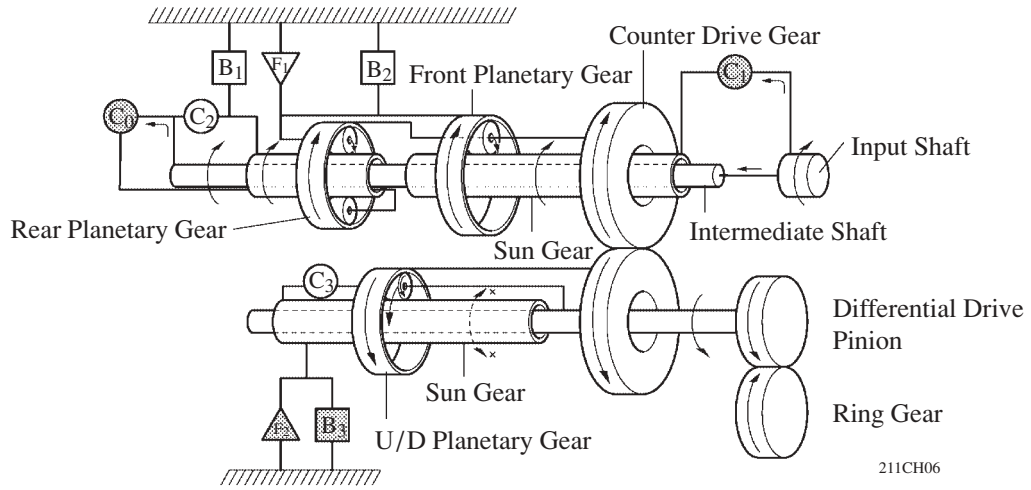

4) 4th Gear (D or S mode 4, 5 Position)

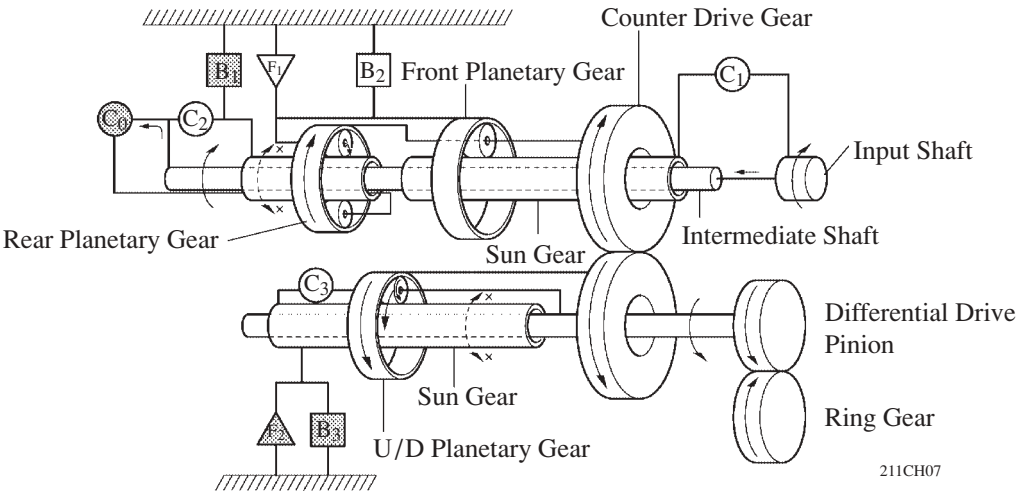

5) 5th Gear (D or S mode 5 Position)

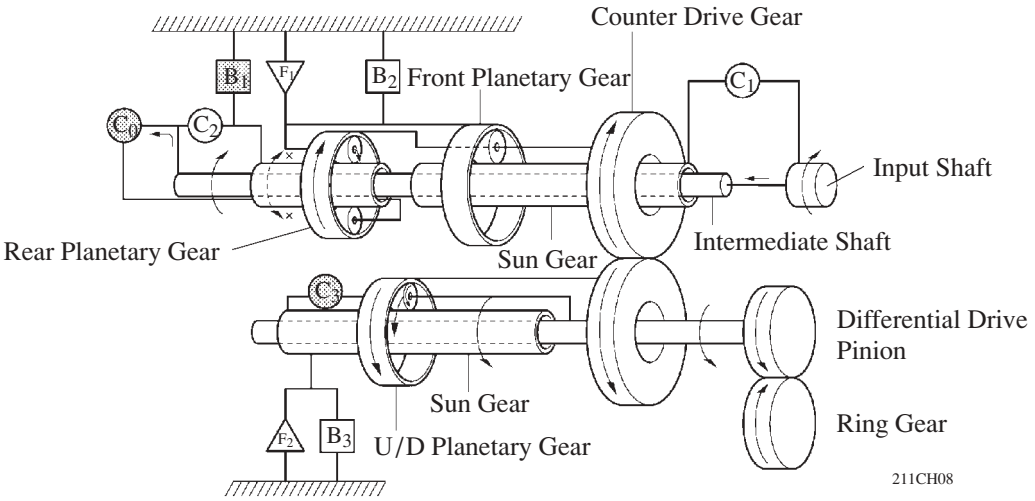

6) 1st Gear (S mode 1 Position)

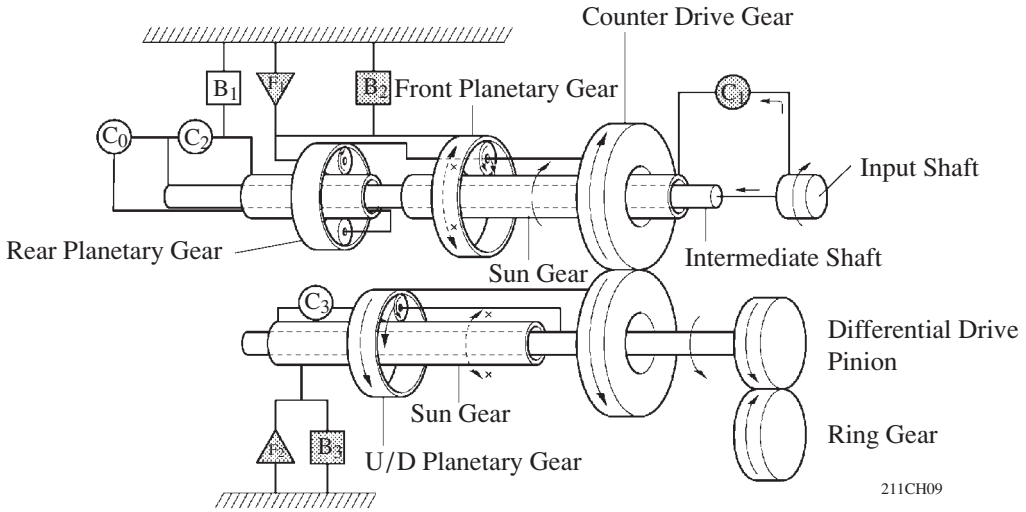

7) Reverse Gear

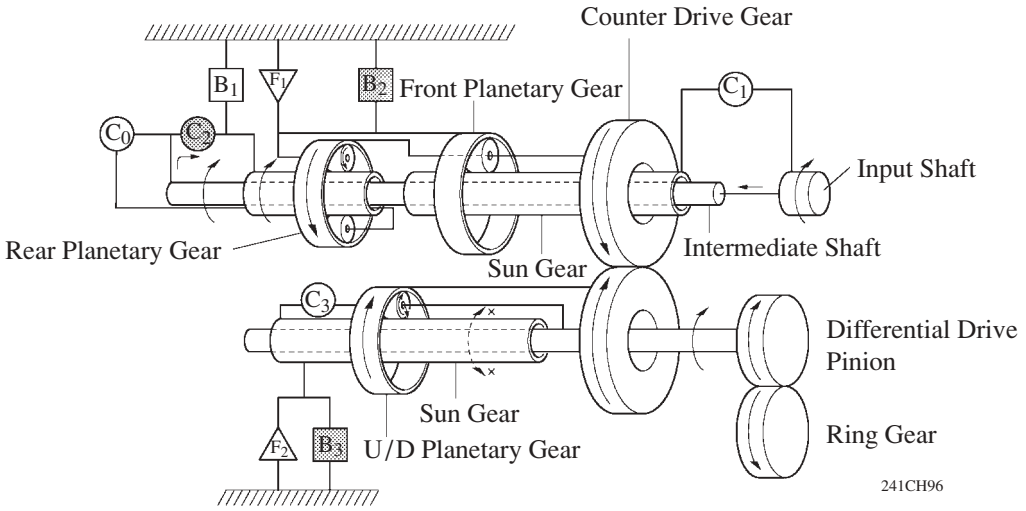

Centrifugal Fluid Pressure Canceling Mechanism

There are two reasons for improving the conventional clutch mechanism:

- To prevent the generation of pressure by the centrifugal force that applied to the fluid in piston fluid pressure chamber (hereafter referred to as "chamber A") when the clutch is released, a check ball is provided to discharge the fluid. Therefore, before the clutch can be subsequently applied, it took time for the fluid to fill the chamber A.
- During shifting, in addition to the original clutch pressure that is controlled by the valve body, the pressure that acts on the fluid in the chamber A also exerts influence, which is dependent upon revolution fluctuations.

To address these two needs for improvement, a canceling fluid pressure chamber (hereafter referred to as "chamber B") has been provided opposite chamber A.

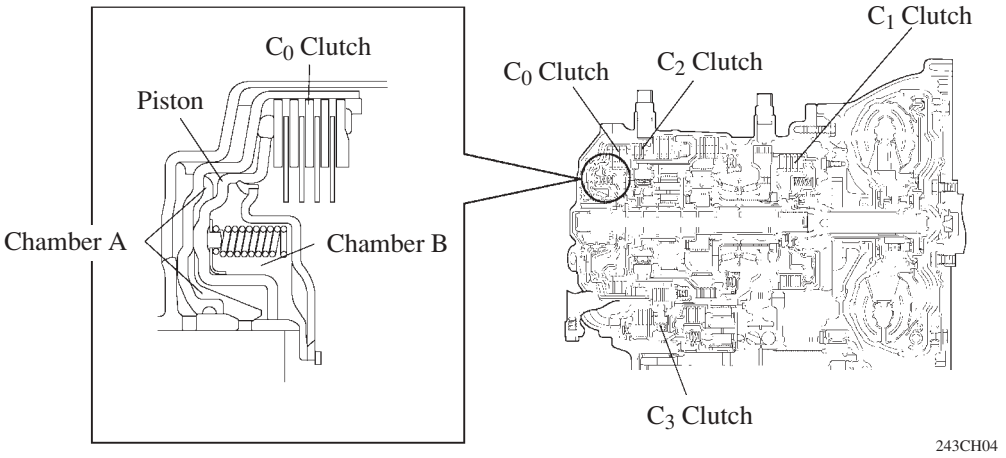

By utilizing the lubrication fluid such as that of the shaft, the same amount of centrifugal force is applied, thus canceling the centrifugal force that is applied to the piston itself. Accordingly, it is not necessary to discharge the fluid through the use of a check ball, and a highly responsive and smooth shifting characteristic has been achieved.

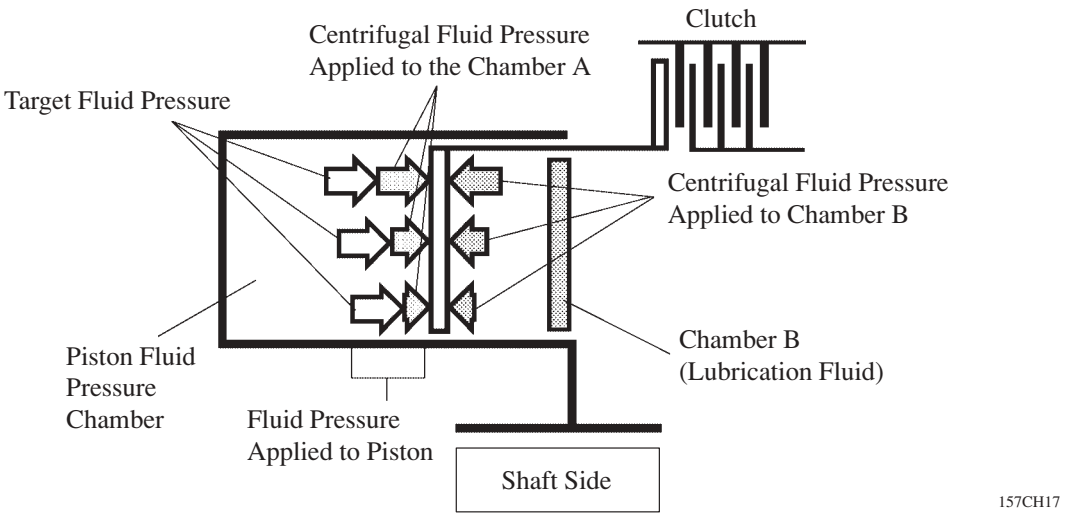

Fluid pressure applied to piston	—	Centrifugal fluid pressure applied to chamber B	=	Target fluid pressure (original clutch pressure)

5. Valve Body Unit

General

The valve body consists of the upper and lower valve bodies and 7 solenoid valves.
Apply orifice control, which controls the flow volume to the B_3 brake, has been adopted in this unit.

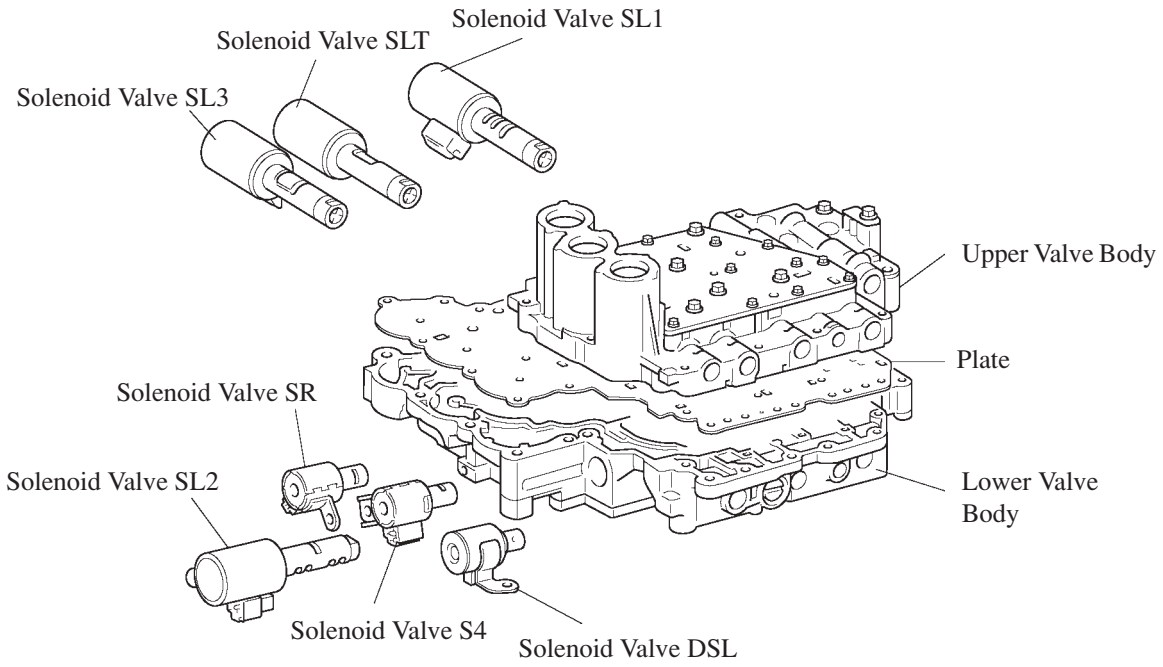

▶ Upper Valve Body ◀

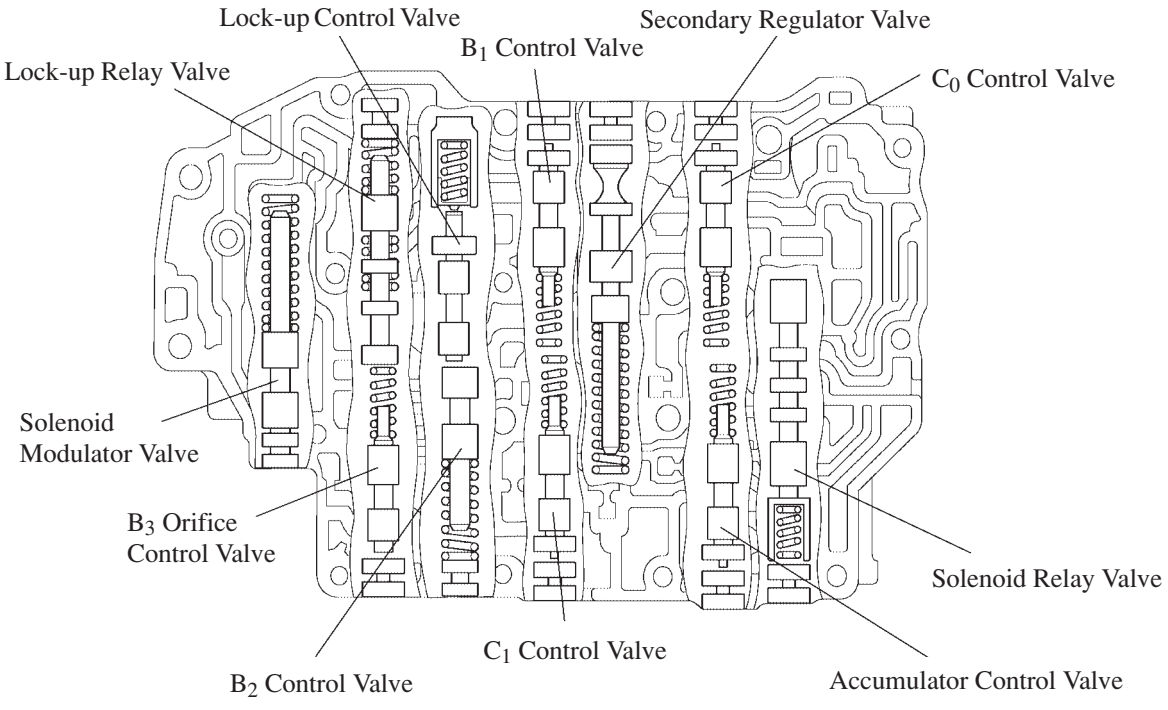

▶ Lower Valve Body ◀

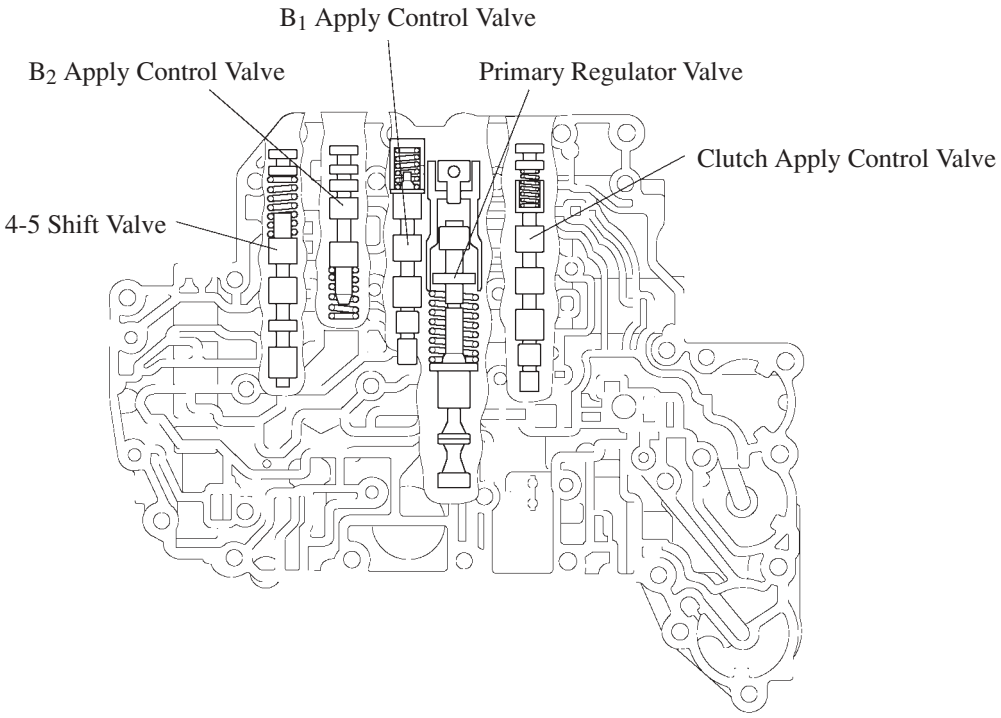

Solenoid Valve

1) Solenoid Valves SL1, SL2, SL3, and SLT

In order to provided a hydraulic pressure that is proportion to current that flows to the solenoid coil, the solenoid valves SL1, SL2, SL3, and SLT linearly control the line pressure and clutch and brake engagement pressure based on the signals it receives from the engine ECU.
The solenoid valves SL1, SL2, SL3, and SLT have the same basic structure.

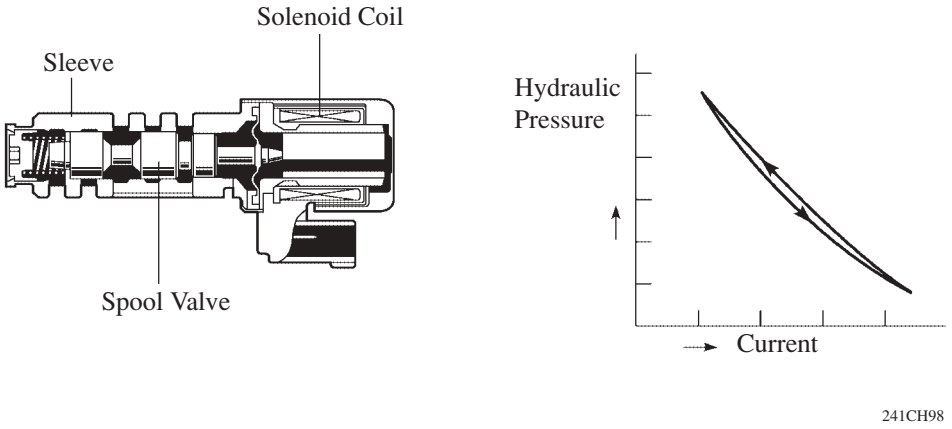

▶ Function of Solenoid Valve SL1, SL2 and SLT ◀

Solenoid Valve	Action	Function
SL1	For clutch and brake engagement pressure control	B_1 brake pressure control
SL2		• C_0 clutch pressure control • Lock-up clutch pressure control
SL3		C_1 clutch pressure control
SLT	For line pressure control	• Line pressure control • Secondary pressure control

2) Solenoid Valves SR, S4, and DSL

The solenoid valves SR, S4, and DSL use a three-way solenoid valve.

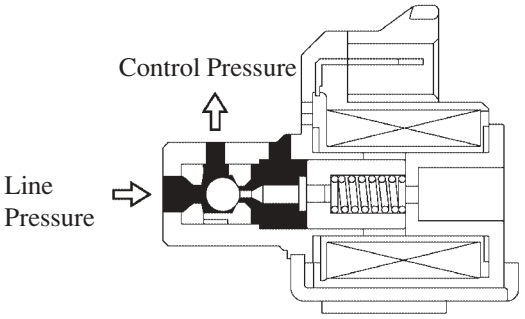

Solenoid Valve ON

161ES65

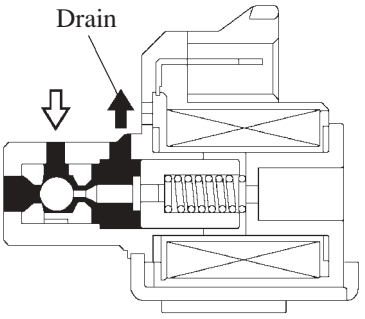

Solenoid Valve OFF

181CH12

The solenoid valve SR controls the solenoid relay valve. Accordingly, the fluid passages from the solenoid valve DSL and S4 have been changed.

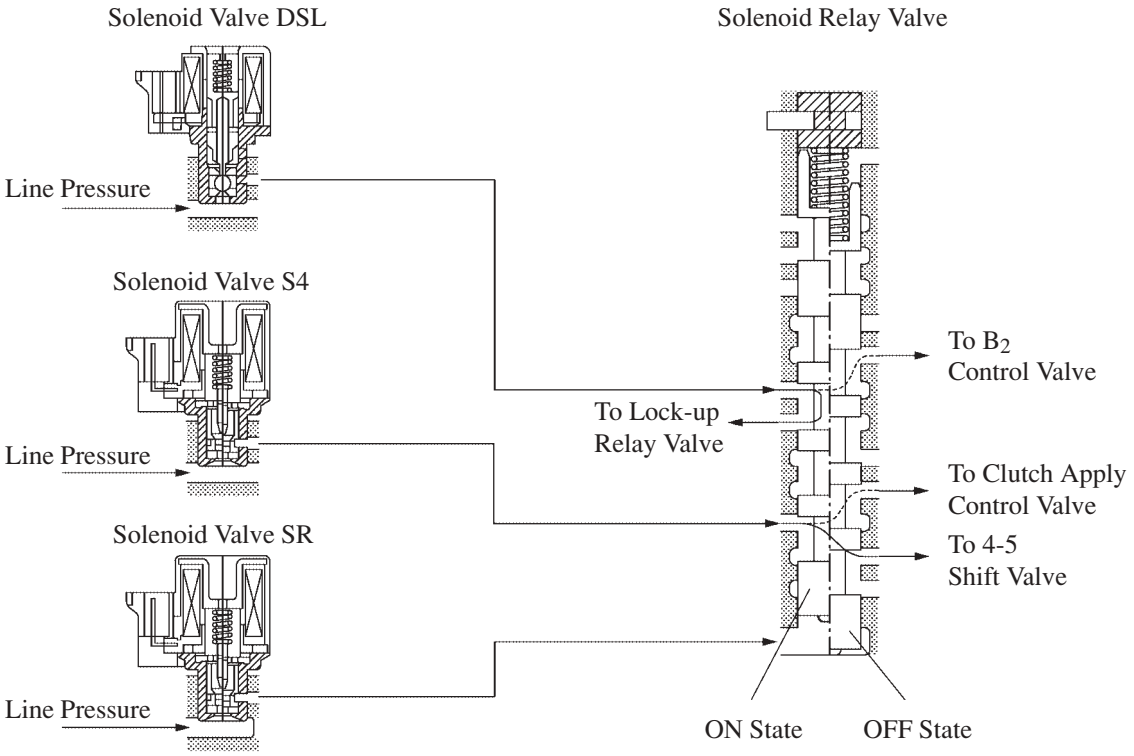

241CH81

The solenoid valves S4 when set to ON controls the 4-5 shift valve to establish the 5th by changing over the fluid pressure applied to B_3 brake and C_3 clutch.

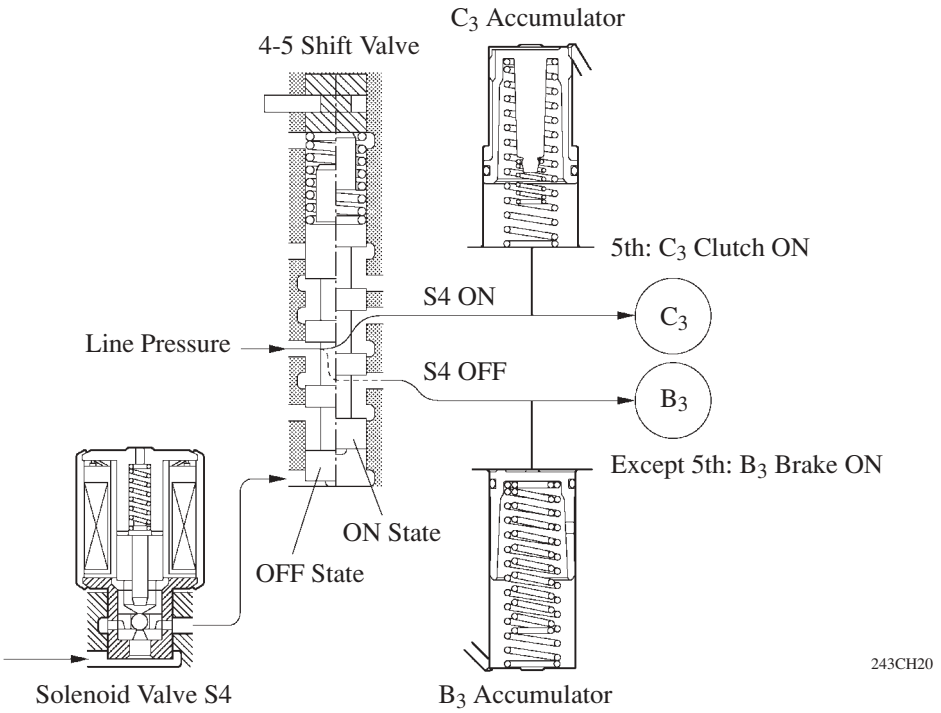

The solenoid valve DSL controls the B_2 control valve via the solenoid relay valve when the transaxle is shifted in the R or L position.
During lock-up, the lock-up relay valve is controlled via the solenoid relay valve.

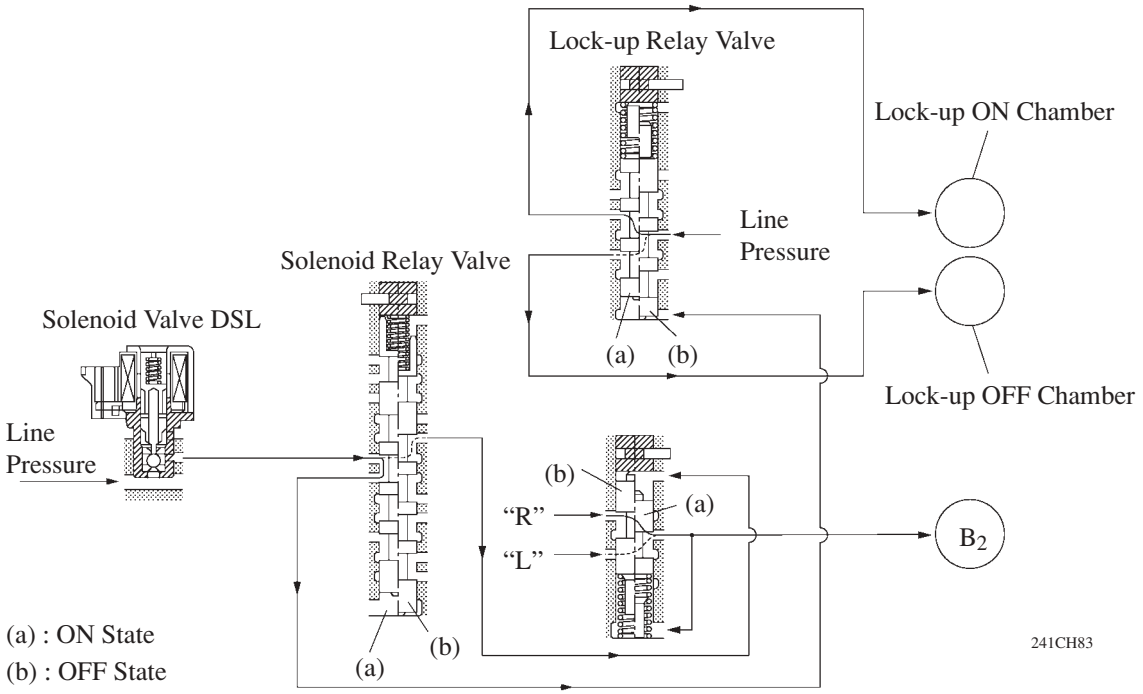

Apply Orifice Control

This control is effected by the B_3 orifice control valve. The B_3 orifice control valve has been provided for the B_3 brake, which is applied when shifting from 5th to 4th. The B_3 orifice control valve is controlled by the amount of the line pressure in accordance with shifting conditions, and the flow volume of the fluid that is supplied to the B_3 brake is controlled by varying the size of the orifice in the control valve.

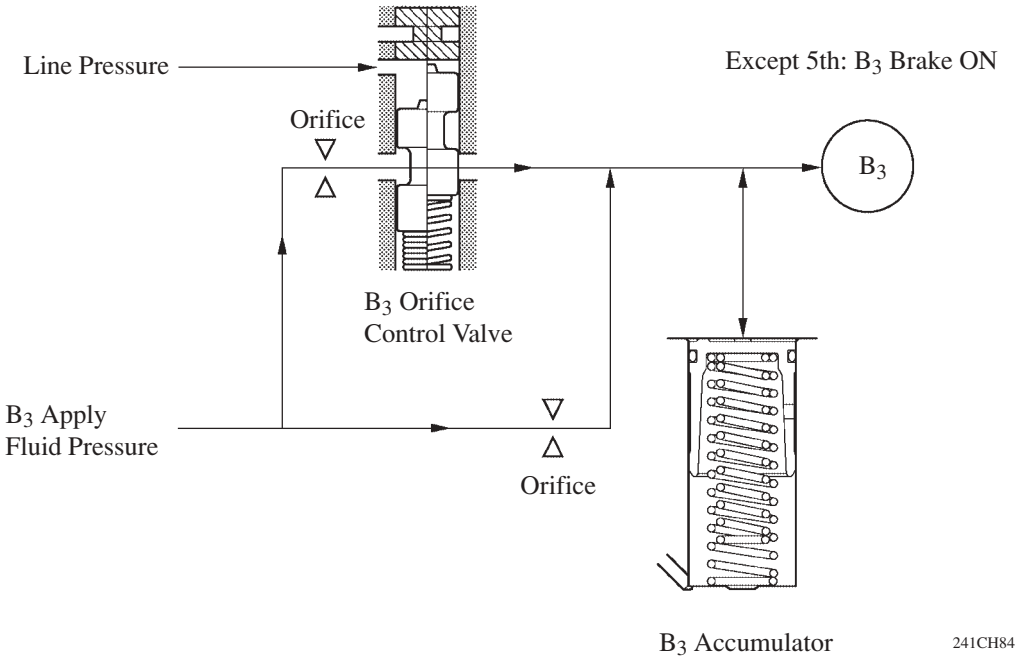

6. Electric Control System

General

The electronic control systems of the U151E automatic transaxle consists of the control listed below.

System	Function
Clutch Pressure Control (See page 112)	● Controls the pressure that is applied directly to B_1 brake, C_0 and C_1 clutches by actuating 3 solenoid valves (SL1, SL2, and SL3) in accordance with engine ECU signals. ● 3 solenoid valves (SL1, SL2, and SL3) minutely controls the clutch pressure in accordance with the engine output and driving conditions.
Line Pressure Optimal Control (See page 114)	Actuates the solenoid valve SLT to control the line pressure in accordance with information from the engine ECU and the operating conditions of the transaxle.
Engine Torque Control	Retards the engine ignition timing temporarily to improve shift feeling during up or down shifting.
Shifting Control in Uphill/Downhill Traveling (See page 113)	Controls to restrict the 4th or 5th upshift or to provide appropriate engine braking by the engine ECU to determine whether the vehicle is traveling uphill or downhill.
Shift Timing Control	The engine ECU sends current to 3 solenoid valves (SL1, SL2, and/or SL3) based on signals from each sensor and shifts the gear.
Flex Lock-up Clutch Control (See page 115)	Controls the solenoid valve SL2 and DSL, provides an intermediate mode between the ON/OFF operation of the lock-up clutch, and increase the operating range of the lock-up clutch to improve fuel economy. However, this control operates only during deceleration.
Lock-up Timing Control	The engine ECU sends current to the solenoid valve DSL and SL2 based on signals from each sensor and engages or disengages the lock-up clutch.
“N” to “D” Squat Control	When the shift lever is shifted from “N” to “D” position, the gear is temporarily shifted to 2nd or 3rd and then to 1st to reduce vehicle squat.
Diagnosis (See page 116)	When the engine ECU detects a malfunction, the engine ECU makes a diagnosis and memorizes the failed section.
Fail-safe (See page 116)	Even if a malfunction is detected in the sensors or solenoids, the engine ECU effects fail-safe control to prevent the vehicle’s drivability from being affected significantly.

Construction

The configuration of the electronic control system in the U151E automatic transaxles is as shown in the following chart.

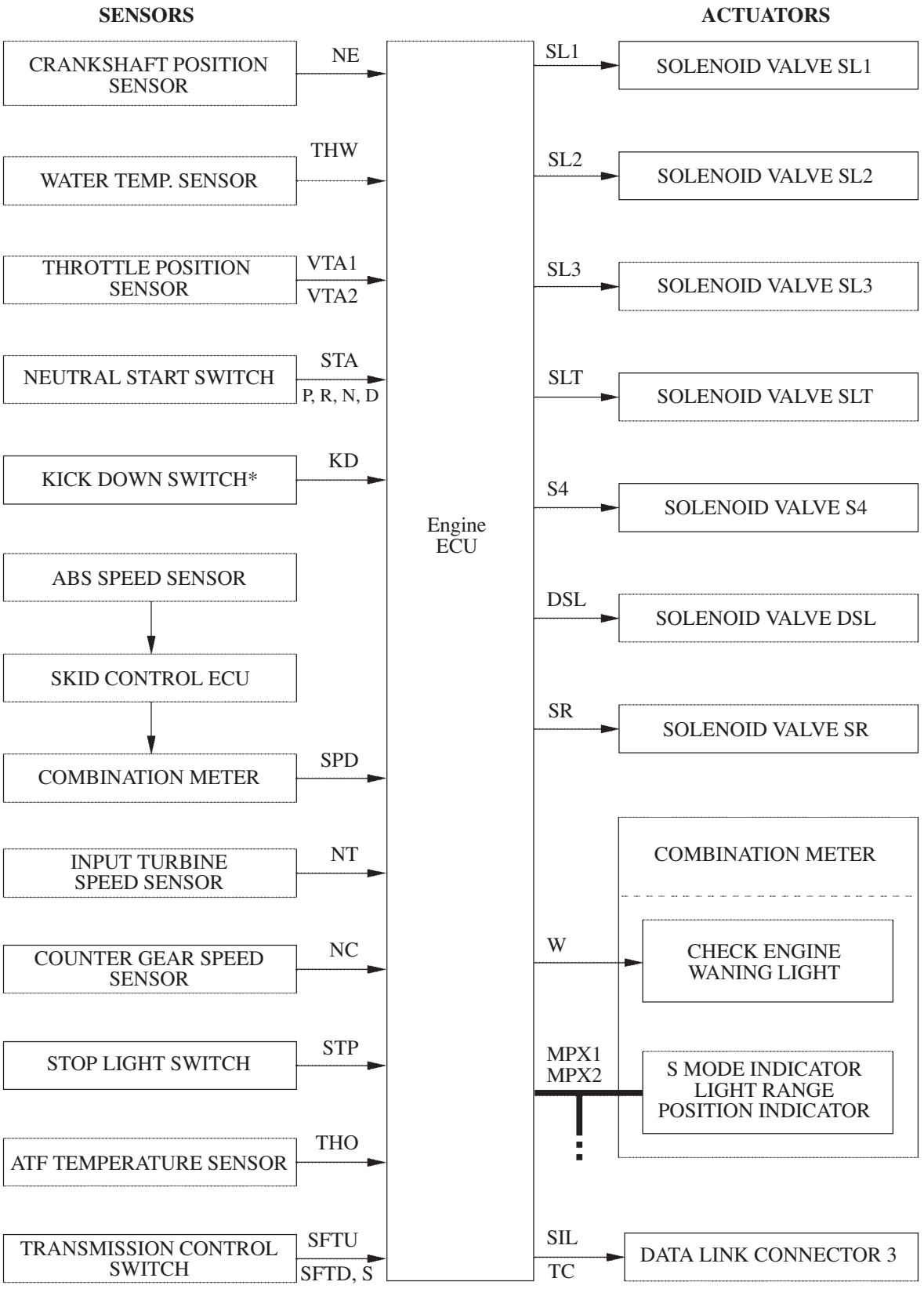

258AE102

*: Only for the LHD models

Layout of Main Components

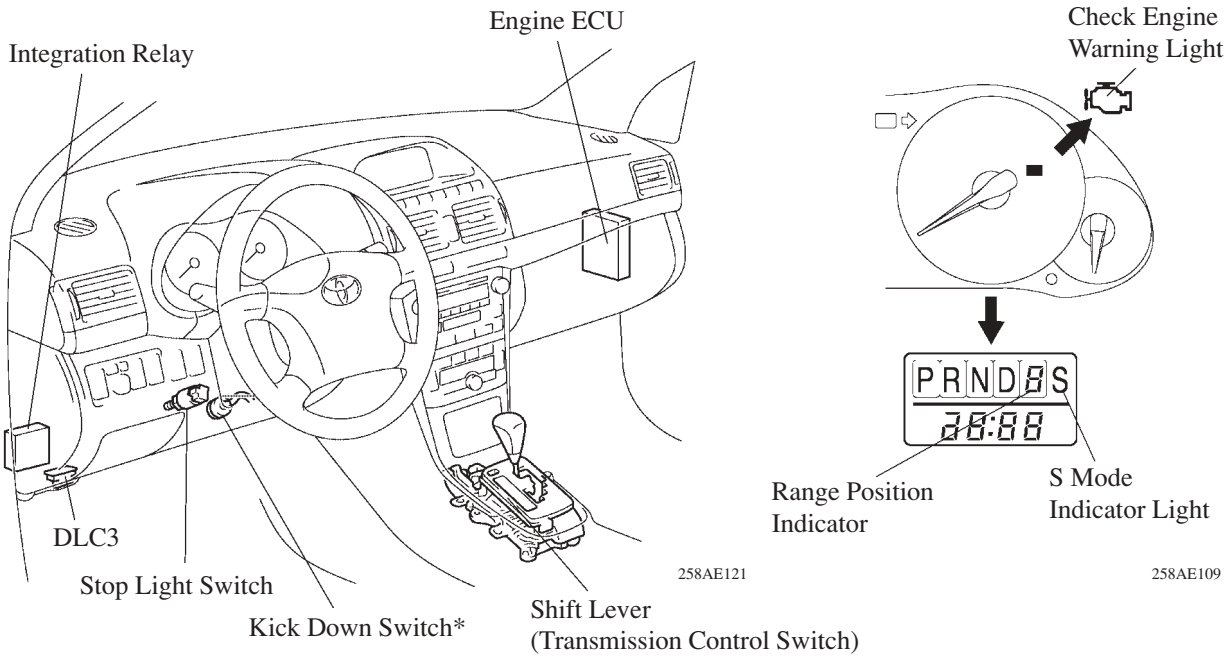

*: Only for the Engine LHD Models

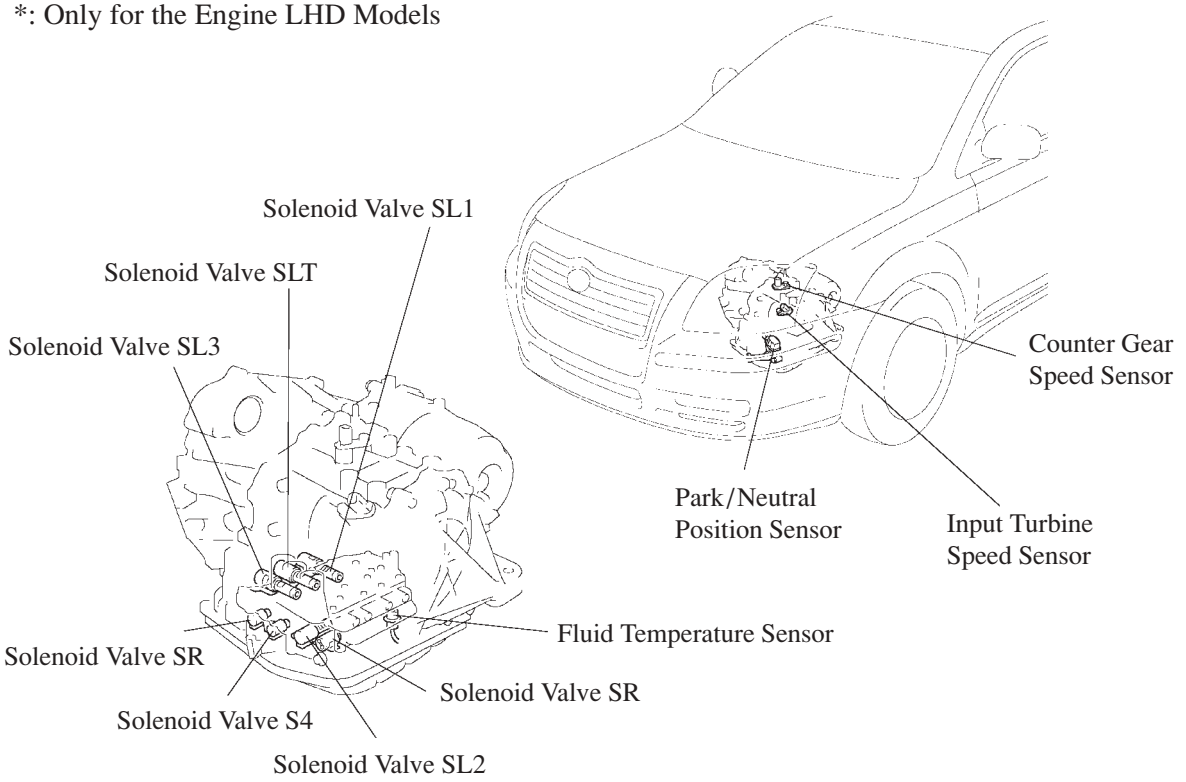

Construction and Operation of Main Components

1) Fluid Temperature Sensor

A fluid temperature sensor is installed in the valve body for direct detection of the fluid temperature. Fluid temperature sensor is used for revision of clutches and brakes pressure to keep smooth shift quality every time.

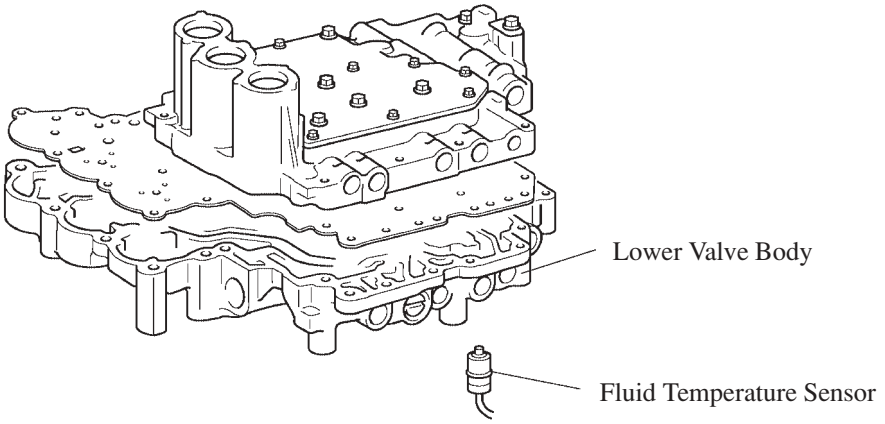

241CH87

2) Speed Sensors

The U151E automatic transaxle has adopted an input turbine speed sensor (for the NT signal) and a counter gear speed sensor (for the NC signal). Thus, the engine ECU can detect the timing of the shifting of the gears and appropriately control the engine torque and hydraulic pressure in response to the various conditions.

- The input turbine speed sensor detects the input speed of the transaxle. The direct clutch (C_2) drum is used as the timing rotor for this sensor.
- The counter gear speed sensor detects the speed of the counter gear. The counter drive gear is used as the timing rotor for this sensor.

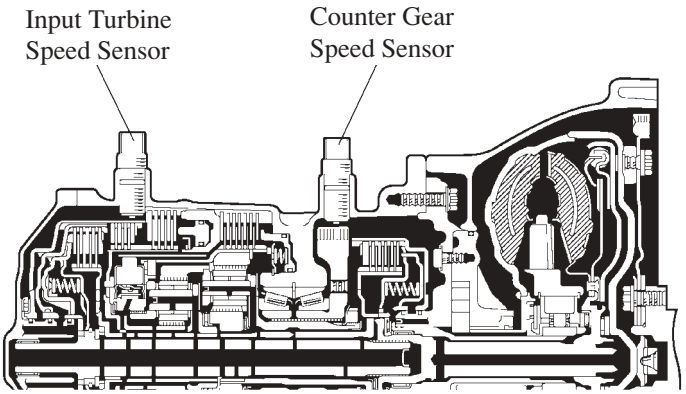

243CH06

Transmission Control Switch

1) General

The transmission control switch is composed of a switch that detects whether the shift lever is shifted into the S position and a momentary type up-shift range and down-shift range switches that detect whether these are operated in the + direction or – direction.

2) Operation

- When the shift lever is engaged into the S position, there is continuity between the S terminal and the IG terminal in the transmission control switch.
- When the shift lever is moved to the + direction, the up-shift range switch turns on and there is continuity between the SFTU terminal and the E terminal in the transmission control switch. Then, this signal is output to the engine ECU as a up-shift range signal.
- When the shift lever is moved to the – direction, the down-shift range switch turns on and there is continuity between the SFTD terminal and the E terminal in the transmission control switch. Then, this signal is output to the engine ECU as a down-shift range signal.

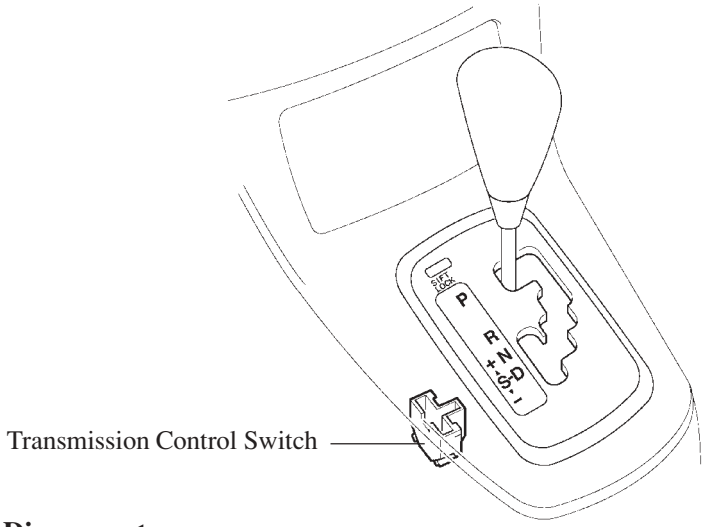

240CH81

▶ System Diagram ◀

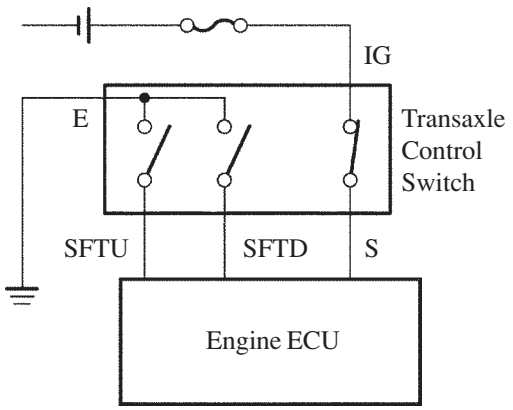

240CH40

Clutch Pressure Control

1) Clutch to Clutch Pressure Control

This control has been adopted for shifting from the 1st to 2nd gear, from the 2nd to 3rd gear, and from the 3rd to 4th gear.
Actuates solenoid valves SL1, SL2, and SL3 in accordance with the signals from the engine ECU, and guides this output pressure directly to the control valves B_1, C_0, and C_1 in order to regulate the line pressure that acts on the B_1 brake, C_0, and C_1 clutches.
As a result, compact B_1, C_0, and C_1 accumulators without a back pressure chamber have been realized.

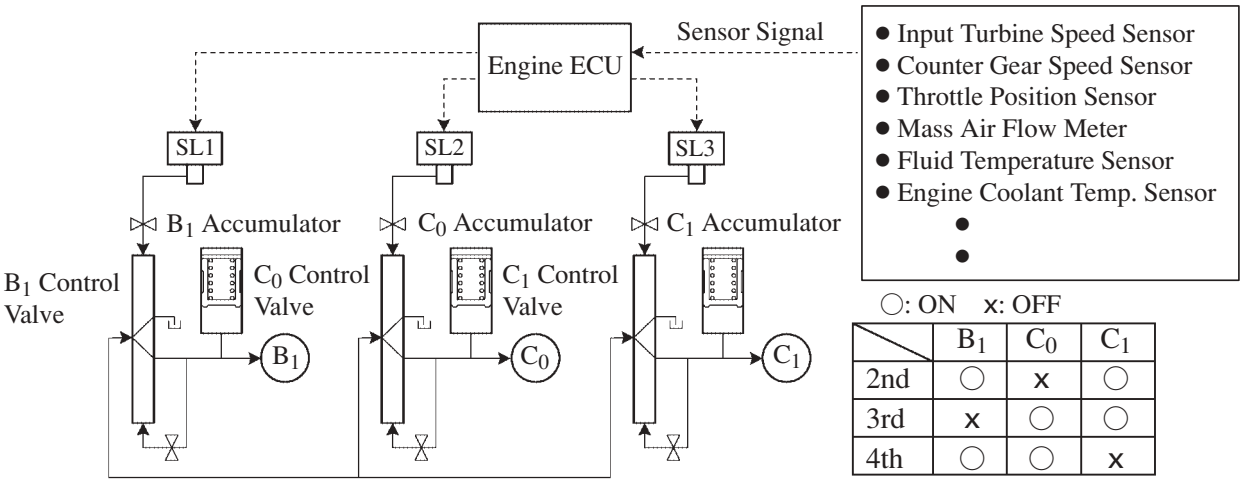

○: ON x: OFF

	B_1	C_0	C_1
2nd	○	x	○
3rd	x	○	○
4th	○	○	x

211CH15

2) Clutch Pressure Optimal Control

The engine ECU monitors the signals from various types of sensor such as the input turbine speed sensor, allowing shift solenoid valves SL1, SL2, and SL3 to minutely control the clutch pressure in accordance with engine output and driving conditions.
As a result, smooth shift characteristics have been realized.

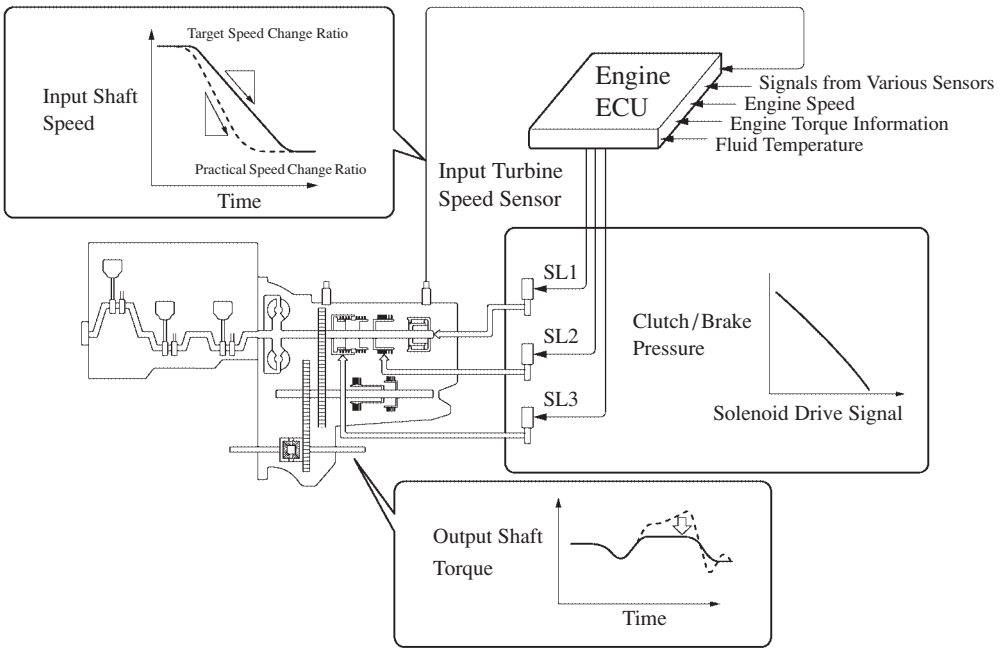

211CH17

Shifting Control in Uphill/Downhill Traveling

1) General

This control minimizes the shifting of gears when the driver operates the accelerator pedal while driving on a winding road with ups and downs, in order to ensure a smooth drive.

2) Shift control in uphill traveling

When the engine ECU determines uphill travel before the transaxle attempts to shift up into 5th, it prohibits the transaxle from shifting up into 5th.
When the engine ECU determines uphill travel with a steeper grade, prevents the transaxle from shifting up into 4th.

3) Shift control in downhill traveling

When the engine ECU determines downhill travel, it shifts down the transaxle from 5th to 4th in accordance with the brake operation signal that is input when the driver operates the brake pedal.
When the engine ECU determines downhill travel with a steeper grade, and a brake operation signal is input again, the engine ECU shifts the transaxle down from 4th to 3rd.

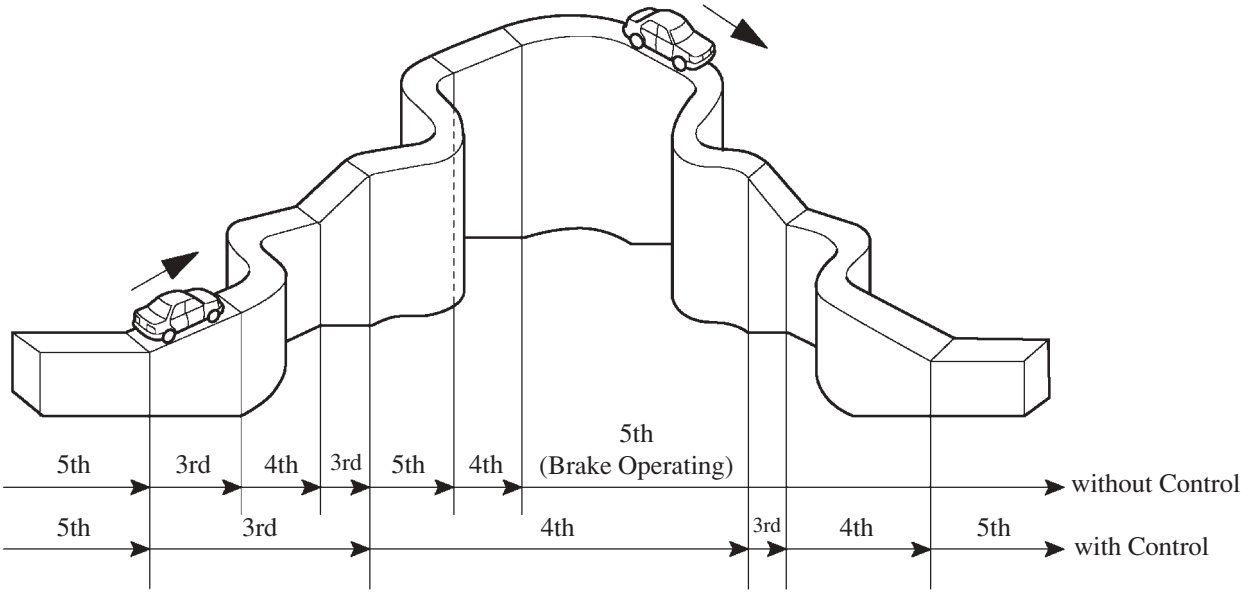

199CH06

4) Uphill/Downhill Judgment

The actual acceleration calculated from the speed sensor signal is compared with the reference acceleration stored in the engine ECU to judge uphill or downhill traveling.

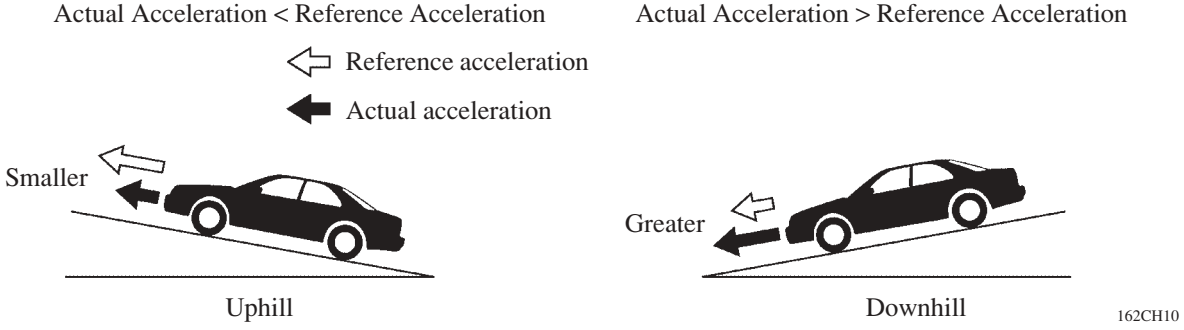

162CH10

Line Pressure Optimal Control

Through the use of the solenoid valve SLT, the line pressure is optimally controlled in accordance with the engine torque information, as well as with the internal operating conditions of the torque converter and the transaxle.

Accordingly, the line pressure can be controlled minutely in accordance with the engine output, traveling condition, and the ATF temperature, thus realizing smooth shift characteristics and optimizing the workload in the oil pump.

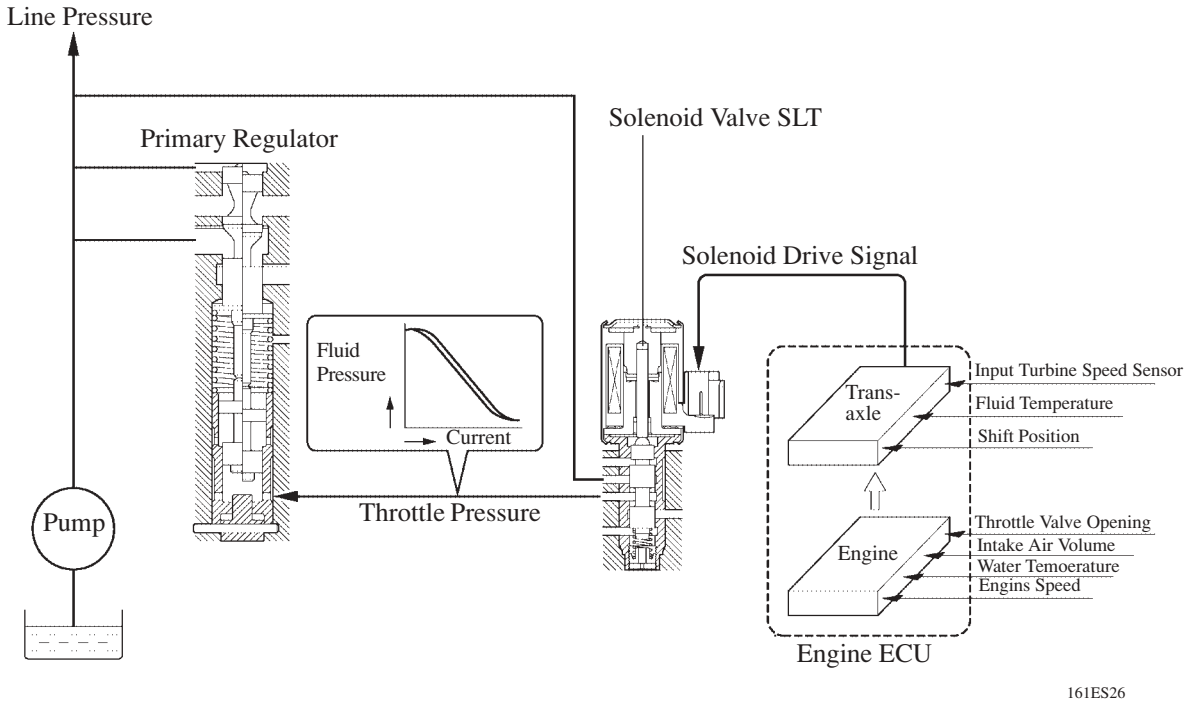

Flex Lock-up Clutch Control

In addition to the conventional lock-up timing control, flex lock-up clutch control is used.
During deceleration, this flex lock-up clutch control regulates the solenoid valve SL2 as an intermediate mode between the ON/OFF operation of the lock-up clutch, in order that lock-up clutch is made to operate in low speeds. Therefore fuel-cut area has been expended and fuel-economy has been improved. The flex lock-up clutch control operates during deceleration, in the 4th and 5th gears in the D range, and in the 4th gear in the 4 range.

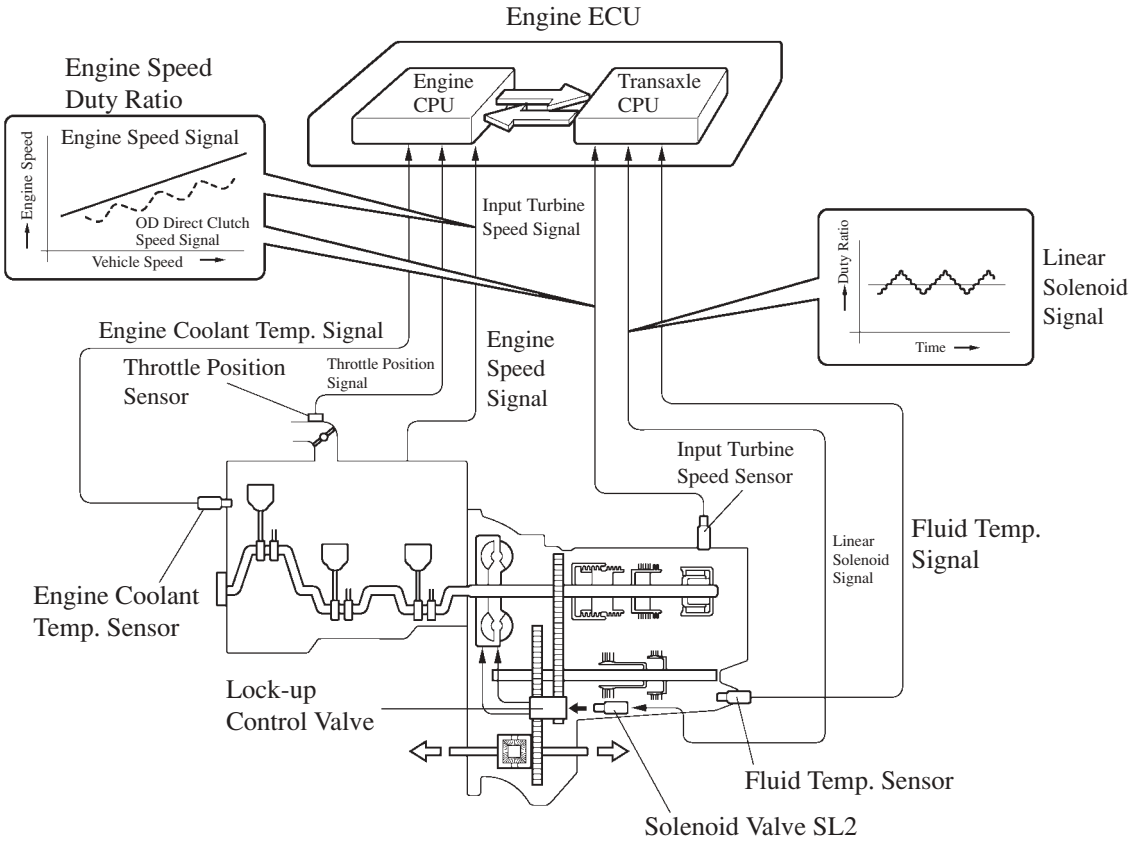

241CH08

Diagnosis

- When the engine ECU detected a malfunction, the engine ECU makes a diagnosis and memorizes the failed section. Furthermore, the check engine warning light in the combination meter illuminates or blinks to inform the driver.
- At the same time, the DTCs (Diagnosis Trouble Codes) are stored in memory. The DTCs can be read by connecting a hand-held tester. For details, see the Avensis Repair Manual Supplement (Pub. No. RM1045E).

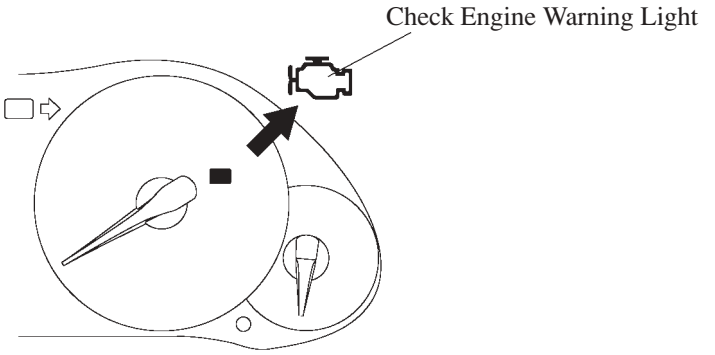

258AE108

Service Tip

The length of time to clear the DTC by the battery terminal disconnection has been changed from the previous 10 seconds to 1 minute.

Fail-Safe

This function minimizes the loss of operability when any abnormality occurs in each sensor or solenoid.

▶ Fail-Safe Control List ◀

Malfunction Part	Function
Speed Sensor	During a speed sensor malfunction, the vehicle speed is detected through the signals from the counter gear speed sensor to effect normal control.
Fluid Temp. Sensor	During a fluid temp. sensor malfunction, 5th upshift is prohibited.
Counter Gear Speed Sensor	During a counter gear speed sensor malfunction, 5th upshift is prohibited.
Solenoid Valve SL1, SL2, SL3 and S4	The current to the failed solenoid valve is cut off and control is effected by operating the other solenoid valves with normal operation. Shift control is effected as described in the table below, depending on the failed solenoid. Even if starting the engine under this condition, the gear position remains where it was before.

○: ON Δ: According to Flex Lock-up x: OFF

Normal	Solenoid Valve	SL1	○	x	○	x	x
		SL2	○	○	x	Δ	Δ
		SL3	x	x	x	○	○
		S4	x	x	x	x	○
	Gear Position		1st	2nd	3rd	4th	5th
SL1 Malfunction (During driving at 1st or 2nd)	Solenoid Valve	SL1	x				
		SL2	○	○	○	○	○
		SL3	x	x	x	○ → x	○ → x
		S4	x	x	x	x	○ → x
	Gear Position		1st → 2nd	2nd	3rd → 2nd	4th → 2nd	5th → 2nd
SL1 Malfunction (During driving at 3rd)	Solenoid Valve	SL1	x				
		SL2	○ → Δ	○ → Δ	Δ	Δ	Δ
		SL3	x	x	x	○ → x	○ → x
		S4	x → ○	x → ○	x → ○	x → ○	○
	Gear Position		1st → 4th	2nd → 4th	3rd → 4th	4th	5th → 4th
SL1 Malfunction (During driving at 4th or 5th)	Solenoid Valve	SL1	x				
		SL2	○ → Δ	○ → Δ	Δ	Δ	Δ
		SL3	x → ○	x → ○	x → ○	○	○
		S4	x	x	x	x	○
	Gear Position		1st → 4th	2nd → 4th	3rd → 4th	4th	5th
SL2 Malfunction	Solenoid Valve	SL1	○	x → ○	○	x → ○	x → ○
		SL2	x				
		SL3	x	x	x	○ → x	○ → x
		S4	x → ○	x → ○	x → ○	x → ○	○
	Gear Position		1st → 4th	2nd → 4th	3rd → 4th	4th	5th → 4th
SL3 Malfunction	Solenoid Valve	SL1	○	x	○	x → ○	x → ○
		SL2	○	○	x	Δ	Δ
		SL3	x				
		S4	x	x	x	x → ○	○
	Gear Position		1st	2nd	3rd	4th	5th → 4th
S4 Malfunction	Solenoid Valve	SL1	○	x	○	x	x
		SL2	○	○	x	Δ	Δ
		SL3	x	x	x	○	○
		S4	x				
	Gear Position		1st	2nd	3rd	4th	5th → 4th
SL1, SL2, SL3, and S4 Malfunction	Solenoid Valve	SL1	x				
		SL2	x				
		SL3	x				
		S4	x				
	Gear Position		1st → 4th	2nd → 4th	3rd → 4th	4th	5th → 4th

3

7. Shift Control Mechanism

General

- A multi-mode automatic transmission, which uses a shift control mechanism consisting of a shift control cable and a transmission control switch, has been adopted.
- A mechanical key interlock that uses a key lock cable has been adopted.

Multi-Mode Automatic Transmission

1) General

The new Avensis equipped with an automatic transaxle have a multi mode automatic transmission that enables the range position to be switched when the shift lever is moved into + or – in "S" position. When the shift lever is engaged into S position, it can be moved to +, toward the front of the vehicle, and –, toward the rear. When moved toward + the range position upshifts, and when moved toward – the range position downshifts. The current range position is displayed in numerals from 1 to 5 on the range position indicator in the combination meter.
With the adoption of the S position, the previous shift lever's L position, 2 position, and O/D OFF switch were discontinued.

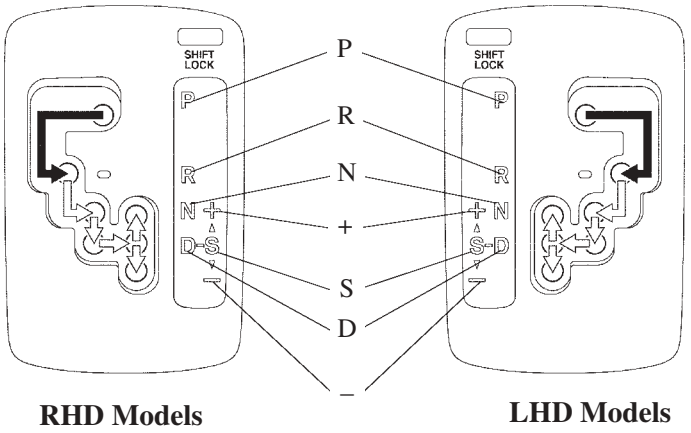

240CH32

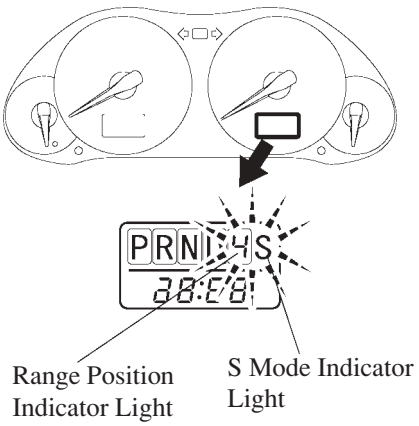

240CH33

2) Construction and Operation

When the shift lever position is moved through P→R→N→D, it operates as a mechanical shift lever in which the shift lever cable engages and moves as in the previous model.

A sense of moderation in select direction is attained due to the plate spring pressing against the moderation in shift control lever.

A sense of moderation in select direction is attained due to the moderation pin installed on the shift lever pressing against the gate through the moderation spring.

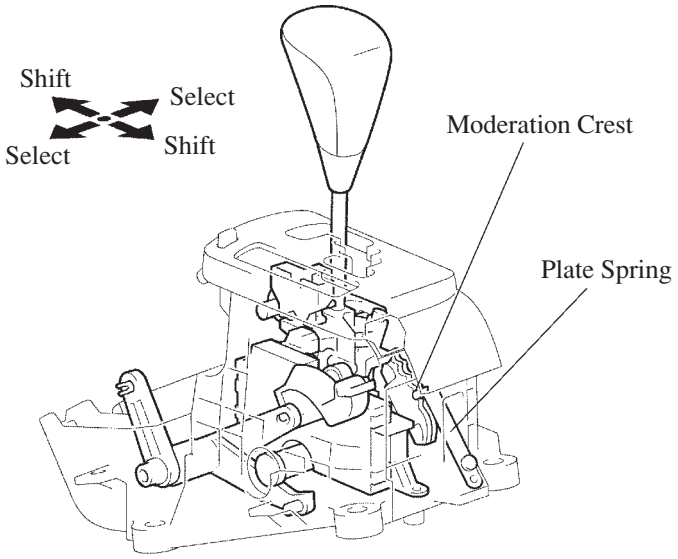

240CH34

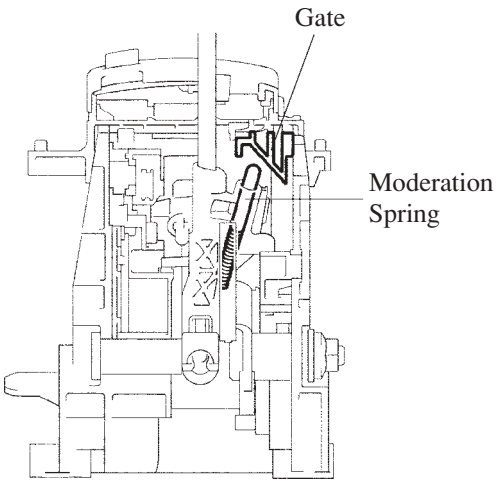

240CH35

When the shift lever position is shifted from D to S, the shift lever projection separates from the hole in the shift control lever and the shift lever and shift lever cable are uncoupled. At this, the shift lever no longer has control of the shift direction.
At the same time, with the movement of select direction toward the shift lever S position, there is continuity between the S terminal and the IG terminal of the transmission control switch. The engine ECU receive this signal and shift into S mode.
At this time, the shift range position always moves into the 3 range position.

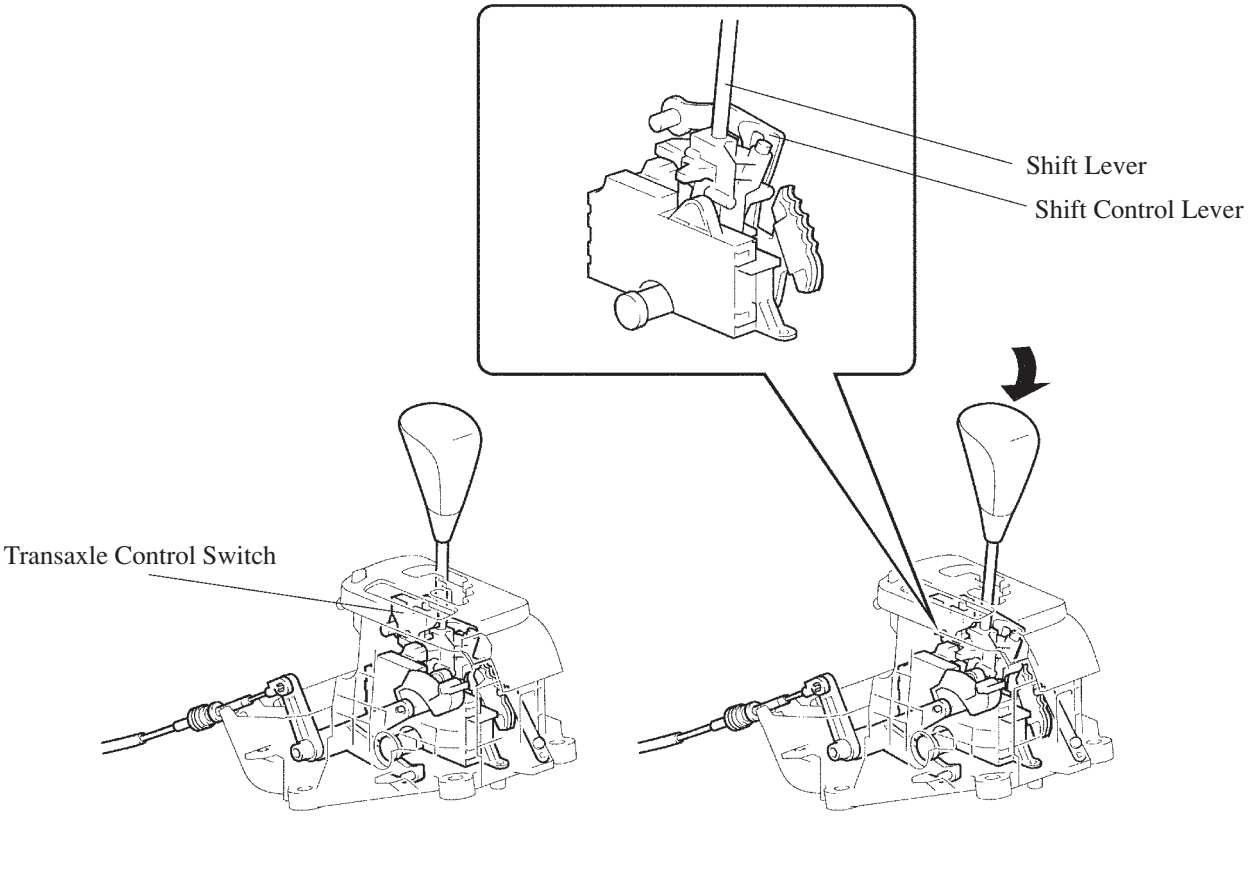

D Position **S Position**

▶ System Diagram ◀

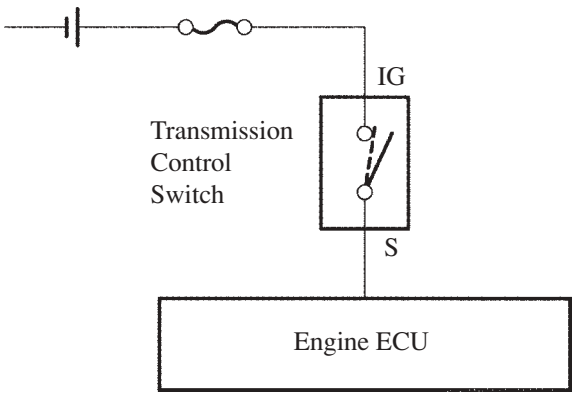

In S position, when the shift lever is shifted to the + or – side, the shift lever projection turns either the transmission control switch upshift range switch or downshift range switch on. If the lever is moved to the + side, there is continuity between the SFTU terminal and the E terminal of the transmission control switch. If the lever is moved to the – side, there is continuity between the SFTD terminal and the E terminal. The engine ECU receive this signal and move the shift range position up or down.

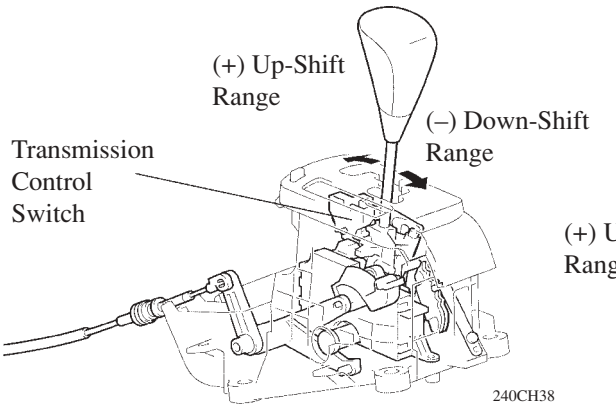

240CH38

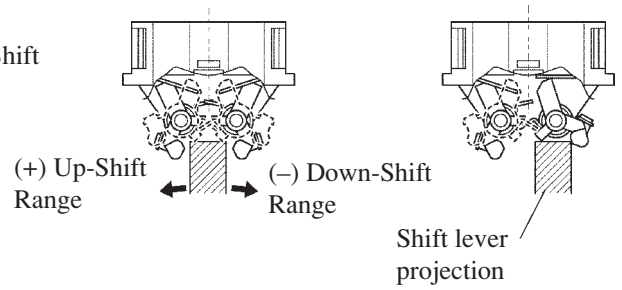

Transmission Control Switch

240CH39

▶ System Diagram ◀

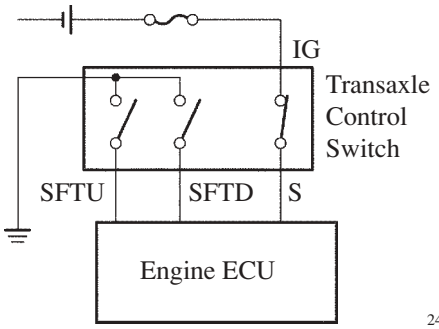

240CH40

3) Shift Program

When the shift lever is moved into the S position, the S mode indicator and range position indicator in the combination meter light up. When the vehicle stops, it shifts into 1st gear an ordinary automatic transaxle.

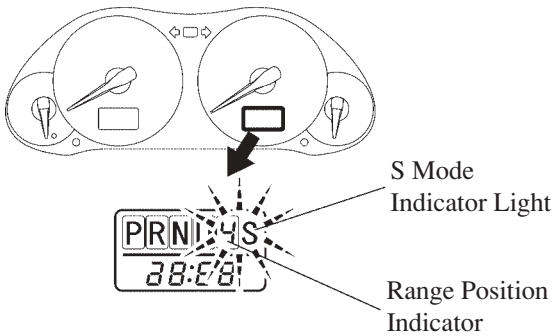

240CH33

The usable gears are shown in the chart below:

→: Up Shift ←: Down Shift

Range Position Indicator	Shift Range Position	Usable Gears
5	5	1st ↔ 2nd ↔ 3rd ↔ 4th ↔ 5th
4	4	1st ↔ 2nd ↔ 3rd ↔ 4th ← 5th
3	3	1st ↔ 2nd ↔ 3rd ← 4th
2	2	1st ↔ 2nd ← 3rd
1	1	1st ← 2nd

Shift Lock System

1) Key Interlock Mechanism

- The key interlock device prevent the key from being pulled out after the ignition switch is turned OFF, unless the shift lever is moved to the P position. Thus, the driver is urged to park the vehicle in the P position.
- A mechanical key interlock device that uses the key lock cable has been adopted.

2) Shift Lock Mechanism

- The shift lock mechanism prevents the shift lever from being shifted to a position other than the P position, unless the ignition switch is ON and the brake pedal is pressed. This prevents the vehicle from starting off suddenly against the wish of driver.
- The shift lock ECU receives the inputs of the stop light switch and ignition switch signals. Upon receiving these signals, the shift lock ECU turns ON the shift lock solenoid in order to release shift lock.
- A shift lock override button, which manually overrides the shift lock mechanism, is provided

3) Layout of Component

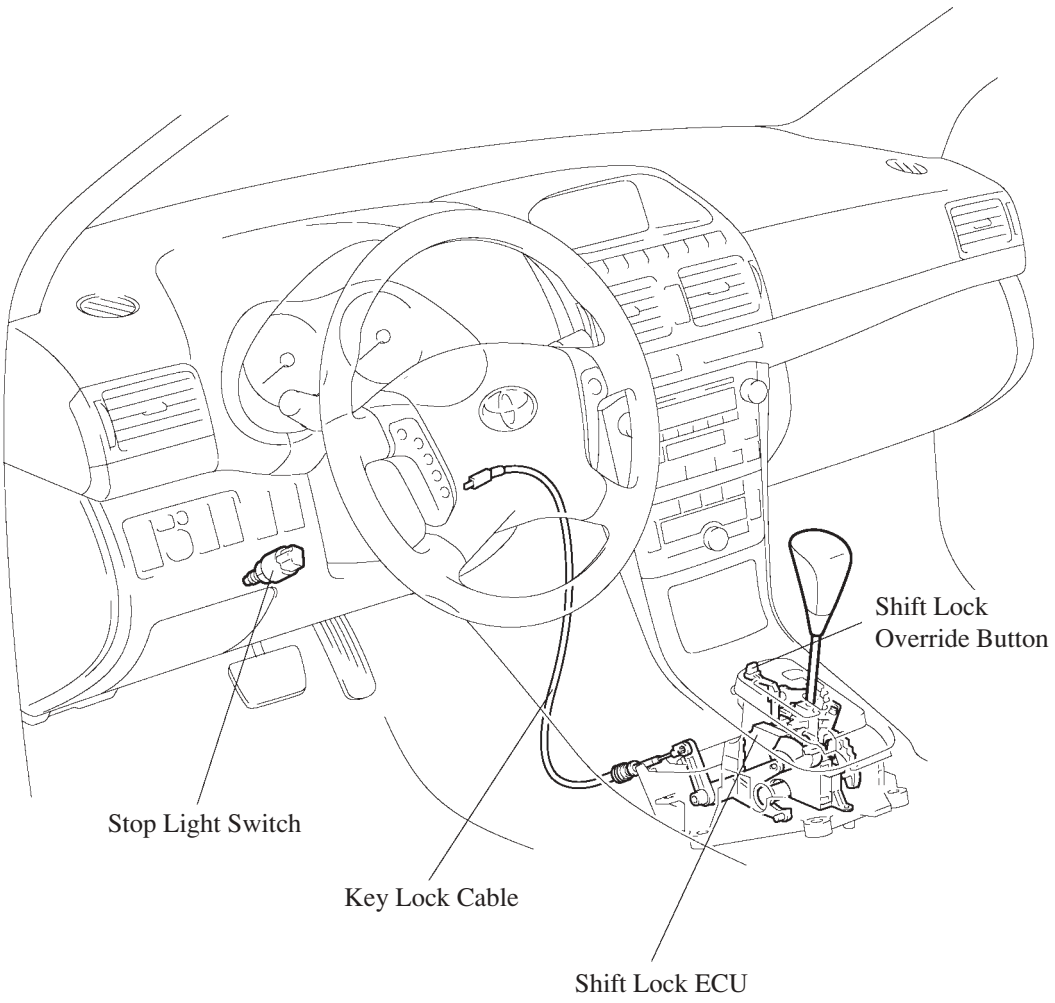

240CH42

8. ATF Warmer

General

An ATF warmer has been adopted for the purpose of warming up the ATF quickly and to set the ATF temperature higher.
As a result, fuel economy has been improved.

Layout of Components

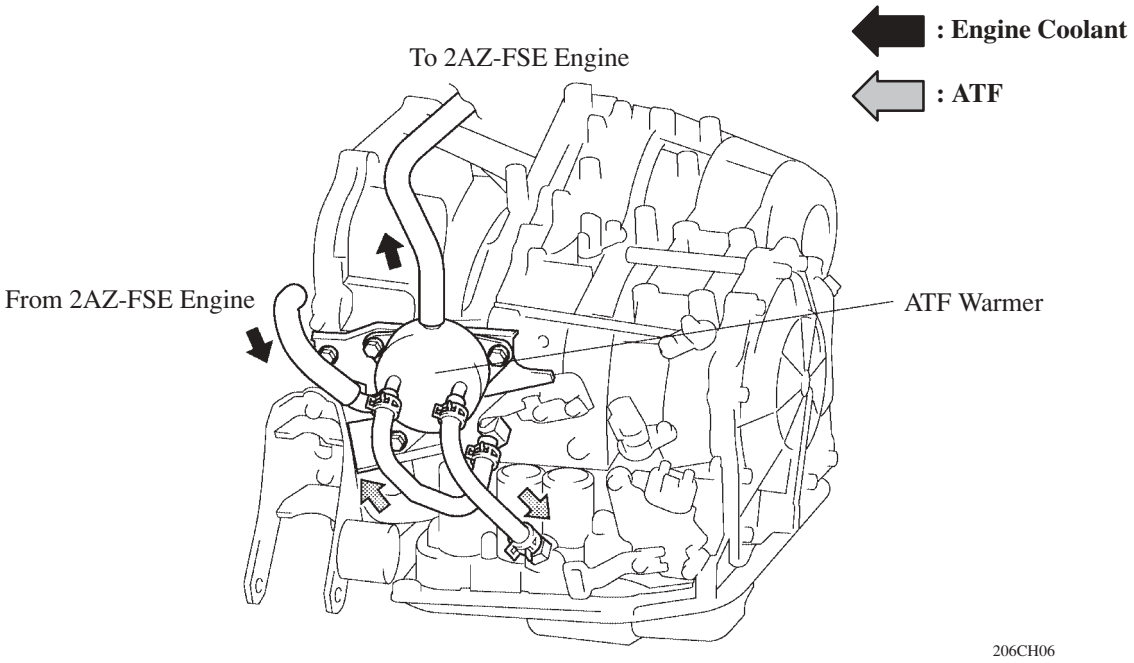

Operation

Item	ATF Warmer	Conventional type
During warm-up	The engine coolant flows directly from the engine to the ATF warmer in order to warm up the ATF quickly even before the thermostat of the engine opens. Consequently, the friction loss of the automatic transaxle is quickly reduced, thus improved fuel economy.	Because the ATF oil cooler is provided in the radiator, the ATF is warmed up only by the actuation of the automatic transaxle oil pump until the thermostat of the engine opens.
After warm-up	The engine coolant flows into the ATF warmer to cool down the ATF before cooling the radiator.	After being cooled in the radiator, the engine coolant flows around the ATF oil cooler to cool the ATF.

MAJOR TECHNICAL SPECIFICATIONS

Item \ Area				EUROPE			
Body Type				4-Door Sedan			
Vehicle Grade				ENTRY		MID TECHNICAL	MID ELEGANT
Model Code				ZZT250R-AEMNKW	ZZT250L-AEMNKW	ZZT250L-AEMEKW	ZZT250L-AEMGKW
Major Dimensions & Vehicle Weights	Overall	Length	mm (in.)	4630 (182.3)	4630 (182.3)	4630 (182.3)	4630 (182.3)
		Width	mm (in.)	1760 (69.3)	1760 (69.3)	1760 (69.3)	1760 (69.3)
		Height	mm (in.)	1480 (58.3)	1480 (58.3)	1480 (58.3)	1480 (58.3)
	Wheel Base		mm (in.)	2700 (106.3)	2700 (106.3)	2700 (106.3)	2700 (106.3)
	Tread	Front	mm (in.)	1506 (59.3)	1506 (59.3)	1506 (59.3)	1506 (59.3)
		Rear	mm (in.)	1510 (59.4)	1510 (59.4)	1510 (59.4)	1510 (59.4)
	Room	Length	mm (in.)	2090 (82.3)	2090 (82.3)	2090 (82.3)	2090 (82.3)
		Width	mm (in.)	1485 (58.5)	1485 (58.5)	1485 (58.5)	1485 (58.5)
		Height	mm (in.)	1210 (47.6), 1160 (45.7)*1	1210 (47.6), 1160 (45.7)*1	1210 (47.6), 1160 (45.7)*1	1210 (47.6), 1160 (45.7)*1
	Overhang	Front	mm (in.)	910 (35.8)	910 (35.8)	910 (35.8)	910 (35.8)
		Rear	mm (in.)	1025 (40.4)	1025 (40.4)	1025 (40.4)	1025 (40.4)
	Min. Running Ground Clearance		mm (in.)	135 (5.3), 155 (6.1)*2	135 (5.3), 155 (6.1)*2	135 (5.3), 155 (6.1)*2	135 (5.3), 155 (6.1)*2
	Angle of Approach		degrees	13.1°, 14.5°*2	13.1°, 14.5°*2	13.1°, 14.5°*2	13.1°, 14.5°*2
	Angle of Departure		degrees	18.7°, 20.1°*2	18.7°, 20.1°*2	18.7°, 20.1°*2	18.7°, 20.1°*2
	Curb Weight	Front	kg (lb)	710 - 750 (1565 - 1653)	710 - 750 (1565 - 1653)	720 - 750 (1587 - 1653)	720 - 750 (1587 - 1653)
		Rear	kg (lb)	535 - 560 (1179 - 1235)	535 - 560 (1179 - 1235)	550 - 570 (1213 - 1257)	550 - 570 (1213 - 1257)
		Total	kg (lb)	1245 - 1310 (2744 - 2888)	1245 - 1310 (2744 - 2888)	1270 - 1320 (2800 - 2910)	1270 - 1320 (2800 - 2910)
	Gross Vehicle Weight	Front	kg (lb)	840 (1852)	840 (1852)	840 (1852)	840 (1852)
		Rear	kg (lb)	980 (2161)	980 (2161)	980 (2161)	980 (2161)
		Total	kg (lb)	1820 (4013)	1820 (4013)	1820 (4013)	1820 (4013)
	Fuel Tank Capacity		ℓ (Imp.gal.)	60 (15.9, 13.2)	60 (15.9, 13.2)	60 (15.9, 13.2)	60 (15.9, 13.2)
	Luggage Compartment Capacity		m³ (cu.ft.)	0.520 (18.4)	0.520 (18.4)	0.520 (18.4)	0.520 (18.4)
Performance	Max. Speed		km / h (mph)	195 (122)	195 (122)	195 (122)	195 (122)
	Max. Cruising Speed		km / h (mph)	—	—	—	—
	Acceleration	0 to 100 km / h	sec.	12.0	12.0	12.0	12.0
		0 to 400 m	sec.	18.1	18.1	18.1	18.1
	Max. Permissible Speed	1st Gear	km / h (mph)	47 (29)	47 (29)	47 (29)	47 (29)
		2nd Gear	km / h (mph)	87 (54)	87 (54)	87 (54)	87 (54)
		3rd Gear	km / h (mph)	127 (78)	127 (78)	127 (78)	127 (78)
		4th Gear	km / h (mph)	172 (106)	172 (106)	172 (106)	172 (106)
	Min. Turning Radius	Tire	m (ft.)	5.4 (17.7)	5.4 (17.7)	5.4 (17.7)	5.4 (17.7)
		Body	m (ft.)	5.75 (18.9)	5.75 (18.9)	5.75 (18.9)	5.75 (18.9)
Engine	Engine Type			3ZZ-FE	3ZZ-FE	3ZZ-FE	3ZZ-FE
	Valve Mechanism			16-Valve, DOHC	16-Valve, DOHC	16-Valve, DOHC	16-Valve, DOHC
	Bore x Stroke		mm (in.)	79.0 x 81.5 (3.11 x 3.21)	79.0 x 81.5 (3.11 x 3.21)	79.0 x 81.5 (3.11 x 3.21)	79.0 x 81.5 (3.11 x 3.21)
	Displacement		cm³ (cu.in.)	1598 (97.5)	1598 (97.5)	1598 (97.5)	1598 (97.5)
	Compression Ratio			10.5	10.5	10.5	10.5
	Fuel System			EFI	EFI	EFI	EFI
	Research Octane No. or Cetane No. (Diesel)			95 or higher	95 or higher	95 or higher	95 or higher
	Max. Output ( )		kW / rpm	81 / 6000	81 / 6000	81 / 6000	81 / 6000
	Max. Torque ( )		N·m / rpm	150 / 3800	150 / 3800	150 / 3800	150 / 3800
Engine Electrical	Battery Capacity (5HR)		Voltage & Amp. hr.	12-32, 48*3	12-32, 48*3	12-32, 48*3	12-32, 48*3
	Alternator Output		Watts	960, 1080*3	960, 1080*3	960, 1080*3	960, 1080*3
	Starter Output		kW	1.3	1.3	1.3	1.3
Chassis	Clutch Type			Dry, Single Plate Diaphragm	Dry, Single Plate Diaphragm	Dry, Single Plate Diaphragm	Dry, Single Plate Diaphragm
	Transaxle Type			C50	C50	C50	C50
	Transmission Gear Ratio	In First		3.545	3.545	3.545	3.545
		In Second		1.904	1.904	1.904	1.904
		In Third		1.310	1.310	1.310	1.310
		In Fourth		0.969	0.969	0.969	0.969
		In Fifth		0.815	0.815	0.815	0.815
		In Reverse		3.250	3.250	3.250	3.250
	Counter Gear Ratio			—	—	—	—
	Differential Gear Ratio (Final)			4.312	4.312	4.312	4.312
	Brake Type	Front		Ventilated Disc	Ventilated Disc	Ventilated Disc	Ventilated Disc
		Rear		Solid Disc	Solid Disc	Solid Disc	Solid Disc
	Parking Brake Type			Drum	Drum	Drum	Drum
	Brake Booster Type and Size		in.	Tandem 8" + 9"	Tandem 8" + 9"	Tandem 8" + 9"	Tandem 8" + 9"
	Proportioning Valve Type			—	—	—	—
	Suspension Type	Front		MacPherson Strut	MacPherson Strut	MacPherson Strut	MacPherson Strut
		Rear		Double Wishbone	Double Wishbone	Double Wishbone	Double Wishbone
	Stabilizer Bar	Front		Standard	Standard	Standard	Standard
		Rear		Standard	Standard	Standard	Standard
	Steering Gear Type			Rack and Pinion	Rack and Pinion	Rack and Pinion	Rack and Pinion
	Steering Gear Ratio (Overall)			17.5	17.5	17.5	17.5
	Power Steering Type			EPS	EPS	EPS	EPS

*1: With Sun Roof
*2: Rough Road Pack
*3: Option

EUROPE					
4-Door Sedan					
ENTRY				MID TECHNICAL	
ZZ251R-AEMNKW	ZZT251L-AEMNKW	ZZT251R-AEPNKW	ZZT251L-AEPNKW	ZZT251R-AEMEKW	ZZT251L-AEMEKW
4630 (182.3)	4630 (182.3)	4630 (182.3)	4630 (182.3)	4630 (182.3)	4630 (182.3)
1760 (69.3)	1760 (69.3)	1760 (69.3)	1760 (69.3)	1760 (69.3)	1760 (69.3)
1480 (58.3)	1480 (58.3)	1480 (58.3)	1480 (58.3)	1480 (58.3)	1480 (58.3)
2700 (106.3)	2700 (106.3)	2700 (106.3)	2700 (106.3)	2700 (106.3)	2700 (106.3)
1506 (59.3)	1506 (59.3)	1506 (59.3)	1506 (59.3)	1506 (59.3)	1506 (59.3)
1510 (59.4)	1510 (59.4)	1510 (59.4)	1510 (59.4)	1510 (59.4)	1510 (59.4)
2090 (82.3)	2090 (82.3)	2090 (82.3)	2090 (82.3)	2090 (82.3)	2090 (82.3)
1485 (58.5)	1485 (58.5)	1485 (58.5)	1485 (58.5)	1485 (58.5)	1485 (58.5)
1210 (47.6), 1160 (45.7)*1	1210 (47.6), 1160 (45.7)*1	1210 (47.6), 1160 (45.7)*1	1210 (47.6), 1160 (45.7)*1	1210 (47.6), 1160 (45.7)*1	1210 (47.6), 1160 (45.7)*1
910 (35.8)	910 (35.8)	910 (35.8)	910 (35.8)	910 (35.8)	910 (35.8)
1025 (40.4)	1025 (40.4)	1025 (40.4)	1025 (40.4)	1025 (40.4)	1025 (40.4)
135 (5.3), 155 (6.1)*2	135 (5.3), 155 (6.1)*2	135 (5.3), 155 (6.1)*2	135 (5.3), 155 (6.1)*2	135 (5.3), 155 (6.1)*2	135 (5.3), 155 (6.1)*2
13.1°, 14.5°*2	13.1°, 14.5°*2	13.1°, 14.5°*2	13.1°, 14.5°*2	13.1°, 14.5°*2	13.1°, 14.5°*2
18.7°, 20.1°*2	18.7°, 20.1°*2	18.7°, 20.1°*2	18.7°, 20.1°*2	18.7°, 20.1°*2	18.7°, 20.1°*2
710 - 750 (1565 - 1653)	710 - 750 (1565 - 1653)	730 - 770 (1609 - 1698)	730 - 770 (1609 - 1698)	720 - 750 (1587 - 1653)	720 - 750 (1587 - 1653)
535 - 560 (1179 - 1235)	535 - 560 (1179 - 1235)	535 - 560 (1179 - 1235)	535 - 560 (1179 - 1235)	550 - 570 (1213 - 1257)	550 - 570 (1213 - 1257)
1245 - 1310 (2744 -2888)	1245 - 1310 (2744 -2888)	1265 - 1330 (2788 - 2933)	1265 - 1330 (2788 - 2933)	1270 - 1320 (2800 - 2910)	1270 - 1320 (2800 - 2910)
840 (1852)	840 (1852)	840 (1852)	840 (1852)	840 (1852)	840 (1852)
980 (2161)	980 (2161)	980 (2161)	980 (2161)	980 (2161)	980 (2161)
1820 (4013)	1820 (4013)	1820 (4013)	1820 (4013)	1820 (4013)	1820 (4013)
60 (15.9, 13.2)	60 (15.9, 13.2)	60 (15.9, 13.2)	60 (15.9, 13.2)	60 (15.9, 13.2)	60 (15.9, 13.2)
0.520 (18.4)	0.520 (18.4)	0.520 (18.4)	0.520 (18.4)	0.520 (18.4)	0.520 (18.4)
200 (124)	200 (124)	195 (122)	195 (122)	200 (124)	200 (124)
—	—	—	—	—	—
10.3	10.3	11.6	11.6	10.3	10.3
17.1	17.1	17.9	17.9	17.1	17.1
51 (31)	51 (31)	59 (36)	59 (36)	51 (31)	51 (31)
95 (59)	95 (59)	109 (67)	109 (67)	95 (59)	95 (59)
139 (86)	139 (86)	169 (105)	169 (105)	139 (86)	139 (86)
176 (109)	176 (109)	—	—	176 (109)	176 (109)
5.4 (17.7)	5.4 (17.7)	5.4 (17.7)	5.4 (17.7)	5.4 (17.7)	5.4 (17.7)
5.75 (18.9)	5.75 (18.9)	5.75 (18.9)	5.75 (18.9)	5.75 (18.9)	5.75 (18.9)
1ZZ-FE	1ZZ-FE	1ZZ-FE	1ZZ-FE	1ZZ-FE	1ZZ-FE
16-Valve, DOHC	16-Valve, DOHC	16-Valve, DOHC	16-Valve, DOHC	16-Valve, DOHC	16-Valve, DOHC
79.0 x 91.5 (3.11 x 3.60)	79.0 x 91.5 (3.11 x 3.60)	79.0 x 91.5 (3.11 x 3.60)	79.0 x 91.5 (3.11 x 3.60)	79.0 x 91.5 (3.11 x 3.60)	79.0 x 91.5 (3.11 x 3.60)
1794 (109.5)	1794 (109.5)	1794 (109.5)	1794 (109.5)	1794 (109.5)	1794 (109.5)
10.0	10.0	10.0	10.0	10.0	10.0
EFI	EFI	EFI	EFI	EFI	EFI
95 or higher	95 or higher	95 or higher	95 or higher	95 or higher	95 or higher
95/6000	95/6000	95/6000	95/6000	95/6000	95/6000
170/4200	170/4200	170/4200	170/4200	170/4200	170/4200
12-32, 48*3	12-32, 48*3	12-32, 48*3	12-32, 48*3	12-32, 48*3	12-32, 48*3
960, 1080*3	960, 1080*3	960, 1080*3	960, 1080*3	960, 1080*3	960, 1080*3
1.3	1.3	1.3	1.3	1.3	1.3
Dry, Single Plate Diaphragm	Dry, Single Plate Diaphragm	—	—	Dry, Single Plate Diaphragm	Dry, Single Plate Diaphragm
C250	C250	U341E	U341E	C250	C250
3.545	3.545	2.847	2.847	3.545	3.545
1.904	1.904	1.552	1.552	1.904	1.904
1.310	1.310	1.000	1.000	1.310	1.310
1.031	1.031	0.700	0.700	1.031	1.031
0.815	0.815	—	—	0.815	0.815
3.250	3.250	2.343	2.343	3.250	3.250
—	—	—	—	—	—
3.941	3.941	4.237	4.237	3.941	3.941
Ventilated Disc	Ventilated Disc	Ventilated Disc	Ventilated Disc	Ventilated Disc	Ventilated Disc
Solid Disc	Solid Disc	Solid Disc	Solid Disc	Solid Disc	Solid Disc
Drum	Drum	Drum	Drum	Drum	Drum
Tandem 8" + 9"	Tandem 8" + 9"	Tandem 8" + 9"	Tandem 8" + 9"	Tandem 8" + 9"	Tandem 8" + 9"
—	—	—	—	—	—
MacPherson Strut	MacPherson Strut	MacPherson Strut	MacPherson Strut	MacPherson Strut	MacPherson Strut
Double Wishbone	Double Wishbone	Double Wishbone	Double Wishbone	Double Wishbone	Double Wishbone
Standard	Standard	Standard	Standard	Standard	Standard
Standard	Standard	Standard	Standard	Standard	Standard
Rack and Pinion	Rack and Pinion	Rack and Pinion	Rack and Pinion	Rack and Pinion	Rack and Pinion
17.5	17.5	17.5	17.5	17.5	17.5
EPS	EPS	EPS	EPS	EPS	EPS

Item \ Area				EUROPE			
Body Type				4-Door Sedan			
Vehicle Grade				MID TECHNICAL		MID ELEGANT	
Model Code				ZZT251R-AEPEKW	ZZT251L-AEPEKW	ZZT251R-AEMGKW	ZZT251L-AEMGKW
Major Dimensions & Vehicle Weights	Overall	Length	mm (in.)	4630 (182.3)	4630 (182.3)	4630 (182.3)	4630 (182.3)
		Width	mm (in.)	1760 (69.3)	1760 (69.3)	1760 (69.3)	1760 (69.3)
		Height	mm (in.)	1480 (58.3)	1480 (58.3)	1480 (58.3)	1480 (58.3)
	Wheel Base		mm (in.)	2700 (106.3)	2700 (106.3)	2700 (106.3)	2700 (106.3)
	Tread	Front	mm (in.)	1506 (59.3)	1506 (59.3)	1506 (59.3)	1506 (59.3)
		Rear	mm (in.)	1510 (59.4)	1510 (59.4)	1510 (59.4)	1510 (59.4)
	Room	Length	mm (in.)	2090 (82.3)	2090 (82.3)	2090 (82.3)	2090 (82.3)
		Width	mm (in.)	1485 (58.5)	1485 (58.5)	1485 (58.5)	1485 (58.5)
		Height	mm (in.)	1210 (47.6), 1160 (45.7)*1	1210 (47.6), 1160 (45.7)*1	1210 (47.6), 1160 (45.7)*1	1210 (47.6), 1160 (45.7)*1
	Overhang	Front	mm (in.)	910 (35.8)	910 (35.8)	910 (35.8)	910 (35.8)
		Rear	mm (in.)	1025 (40.4)	1025 (40.4)	1025 (40.4)	1025 (40.4)
	Min. Running Ground Clearance		mm (in.)	135 (5.3), 155 (6.1)*2	135 (5.3), 155 (6.1)*2	135 (5.3), 155 (6.1)*2	135 (5.3), 155 (6.1)*2
	Angle of Approach		degrees	13.1°, 14.5°*2	13.1°, 14.5°*2	13.1°, 14.5°*2	13.1°, 14.5°*2
	Angle of Departure		degrees	18.7°, 20.1°*2	18.7°, 20.1°*2	18.7°, 20.1°*2	18.7°, 20.1°*2
	Curb Weight	Front	kg (lb)	740 - 770 (1631 - 1698)	740 - 770 (1631 - 1698)	720 - 750 (1587 - 1653)	720 - 750 (1587 - 1653)
		Rear	kg (lb)	550 - 575 (1213 - 1268)	550 - 575 (1213 - 1268)	550 - 570 (1213 - 1257)	550 - 570 (1213 - 1257)
		Total	kg (lb)	1290 - 1345 (2844 - 2966)	1290 - 1345 (2844 - 2966)	1270 - 1320 (2800 - 2910)	1270 - 1320 (2800 - 2910)
	Gross Vehicle Weight	Front	kg (lb)	840 (1852)	840 (1852)	840 (1852)	840 (1852)
		Rear	kg (lb)	980 (2161)	980 (2161)	980 (2161)	980 (2161)
		Total	kg (lb)	1820 (4013)	1820 (4013)	1820 (4013)	1820 (4013)
	Fuel Tank Capacity		ℓ (Imp.gal.)	60 (15.9, 13.2)	60 (15.9, 13.2)	60 (15.9, 13.2)	60 (15.9, 13.2)
	Luggage Compartment Capacity		m³ (cu.ft.)	0.520 (18.4)	0.520 (18.4)	0.520 (18.4)	0.520 (18.4)
Performance	Max. Speed		km/h (mph)	195 (122)	195 (122)	200 (124)	200 (124)
	Max. Cruising Speed		km/h (mph)	—	—	—	—
	Acceleration	0 to 100 km/h	sec.	11.6	11.6	10.3	10.3
		0 to 400 m	sec.	17.9	17.9	17.1	17.1
	Max. Permissible Speed	1st Gear	km/h (mph)	59 (36)	59 (36)	51 (31)	51 (31)
		2nd Gear	km/h (mph)	109 (67)	109 (67)	95 (59)	95 (59)
		3rd Gear	km/h (mph)	169 (105)	169 (105)	139 (86)	139 (86)
		4th Gear	km/h (mph)	—	—	176 (109)	176 (109)
	Min. Turning Radius	Tire	m (ft.)	5.4 (17.7)	5.4 (17.7)	5.4 (17.7)	5.4 (17.7)
		Body	m (ft.)	5.75 (18.9)	5.75 (18.9)	5.75 (18.9)	5.75 (18.9)
Engine	Engine Type			1ZZ-FE	1ZZ-FE	1ZZ-FE	1ZZ-FE
	Valve Mechanism			16-Valve, DOHC	16-Valve, DOHC	16-Valve, DOHC	16-Valve, DOHC
	Bore x Stroke		mm (in.)	79.0 x 91.5 (3.11 x 3.60)	79.0 x 91.5 (3.11 x 3.60)	79.0 x 91.5 (3.11 x 3.60)	79.0 x 91.5 (3.11 x 3.60)
	Displacement		cm³ (cu.in.)	1794 (109.5)	1794 (109.5)	1794 (109.5)	1794 (109.5)
	Compression Ratio			10.0	10.0	10.0	10.0
	Fuel System			EFI	EFI	EFI	EFI
	Research Octane No. or Cetane No. (Diesel)			95 or higher	95 or higher	95 or higher	95 or higher
	Max. Output ( )		kW/rpm	95/6000	95/6000	95/6000	95/6000
	Max. Torque ( )		N·m/rpm	170/4200	170/4200	170/4200	170/4200
Engine Electrical	Battery Capacity (5HR)		Voltage & Amp. hr.	12-32, 48*3	12-32, 48*3	12-32, 48*3	12-32, 48*3
	Alternator Output		Watts	960, 1080*3	960, 1080*3	960, 1080*3	960, 1080*3
	Starter Output		kW	1.3	1.3	1.3	1.3
Chassis	Clutch Type			—	—	Dry, Single Plate Diaphragm	Dry, Single Plate Diaphragm
	Transaxle Type			U341E	U341E	C250	C250
	Transmission Gear Ratio	In First		2.847	2.847	3.545	3.545
		In Second		1.552	1.552	1.904	1.904
		In Third		1.000	1.000	1.310	1.310
		In Fourth		0.700	0.700	1.031	1.031
		In Fifth		—	—	0.815	0.815
		In Reverse		2.343	2.343	3.250	3.250
	Counter Gear Ratio			—	—	—	—
	Differential Gear Ratio (Final)			4.237	4.237	3.941	3.941
	Brake Type	Front		Ventilated Disc	Ventilated Disc	Ventilated Disc	Ventilated Disc
		Rear		Solid Disc	Solid Disc	Solid Disc	Solid Disc
	Parking Brake Type			Drum	Drum	Drum	Drum
	Brake Booster Type and Size		in.	Tandem 8" + 9"	Tandem 8" + 9"	Tandem 8" + 9"	Tandem 8" + 9"
	Proportioning Valve Type			—	—	—	—
	Suspension Type	Front		MacPherson Strut	MacPherson Strut	MacPherson Strut	MacPherson Strut
		Rear		Double Wishbone	Double Wishbone	Double Wishbone	Double Wishbone
	Stabilizer Bar	Front		Standrad	Standrad	Standrad	Standrad
		Rear		Standrad	Standrad	Standrad	Standrad
	Steering Gear Type			Rack and Pinion	Rack and Pinion	Rack and Pinion	Rack and Pinion
	Steering Gear Ratio (Overall)			17.5	17.5	17.5	17.5
	Power Steering Type			EPS	EPS	EPS	EPS

*1: With Sun Roof
*2: Rough Road Pack
*3: Option

EUROPE					
4-Door Sedan					
MID ELEGANT		MID TECHNICAL		MID ELEGANT	
ZZT251R-AEPGKW	ZZT251L-AEPGKW	AZT250L-AEMEKW	AZT250L-AEPEKW	AZT250L-AEMGKW	AZT250L-AEPGKW
4630 (182.3)	4630 (182.3)	4630 (182.3)	4630 (182.3)	4630 (182.3)	4630 (182.3)
1760 (69.3)	1760 (69.3)	1760 (69.3)	1760 (69.3)	1760 (69.3)	1760 (69.3)
1480 (58.3)	1480 (58.3)	1480 (58.3)	1480 (58.3)	1480 (58.3)	1480 (58.3)
2700 (106.3)	2700 (106.3)	2700 (106.3)	2700 (106.3)	2700 (106.3)	2700 (106.3)
1506 (59.3)	1506 (59.3)	1506 (59.3)	1506 (59.3)	1506 (59.3)	1506 (59.3)
1510 (59.4)	1510 (59.4)	1510 (59.4)	1510 (59.4)	1510 (59.4)	1510 (59.4)
2090 (82.3)	2090 (82.3)	2090 (82.3)	2090 (82.3)	2090 (82.3)	2090 (82.3)
1485 (58.5)	1485 (58.5)	1485 (58.5)	1485 (58.5)	1485 (58.5)	1485 (58.5)
1210 (47.6), 1160 (45.7)*1	1210 (47.6), 1160 (45.7)*1	1210 (47.6), 1160 (45.7)*1	1210 (47.6), 1160 (45.7)*1	1210 (47.6), 1160 (45.7)*1	1210 (47.6), 1160 (45.7)*1
910 (35.8)	910 (35.8)	910 (35.8)	910 (35.8)	910 (35.8)	910 (35.8)
1025 (40.4)	1025 (40.4)	1025 (40.4)	1025 (40.4)	1025 (40.4)	1025 (40.4)
135 (5.3), 155 (6.1)*2	135 (5.3), 155 (6.1)*2	135 (5.3), 155 (6.1)*2	135 (5.3), 155 (6.1)*2	135 (5.3), 155 (6.1)*2	135 (5.3), 155 (6.1)*2
13.1°, 14.5°*2	13.1°, 14.5°*2	13.1°, 14.5°*2	13.1°, 14.5°*2	13.1°, 14.5°*2	13.1°, 14.5°*2
18.7°, 20.1°*2	18.7°, 20.1°*2	18.7°, 20.1°*2	18.7°, 20.1°*2	18.7°, 20.1°*2	18.7°, 20.1°*2
740 - 770 (1631 - 1698)	740 - 770 (1631 - 1698)	765 - 800 (1687 - 1764)	795 - 830 (1753 - 1830)	765 - 800 (1687 - 1764)	795 - 830 (1753 - 1830)
550 - 575 (1213 - 1268)	550 - 575 (1213 - 1268)	540 - 555 (1190 - 1224)	540 - 555 (1190 - 1224)	540 - 555 (1190 - 1224)	540 - 555 (1190 - 1224)
1290 - 1345 (2844 - 2966)	1290 - 1345 (2844 - 2966)	1305 - 1355 (2877 - 2988)	1335 - 1385 (2943 - 3054)	1305 - 1355 (2877 - 2988)	1335 - 1385 (2943 - 3054)
840 (1852)	840 (1852)	915 (2017)	915 (2017)	915 (2017)	915 (2017)
980 (2161)	980 (2161)	975 (2150)	975 (2150)	975 (2150)	975 (2150)
1820 (4013)	1820 (4013)	1890 (4167)	1890 (4167)	1890 (4167)	1890 (4167)
60 (15.9, 13.2)	60 (15.9, 13.2)	60 (15.9, 13.2)	60 (15.9, 13.2)	60 (15.9, 13.2)	60 (15.9, 13.2)
0.520 (18.4)	0.520 (18.4)	0.520 (18.4)	0.520 (18.4)	0.520 (18.4)	0.520 (18.4)
185 (115)	195 (122)	200 (124)	190 (118)	200 (124)	190 (118)
—	—	—	—	—	—
11.6	11.6	9.5	11.1	9.5	11.1
17.9	17.9	16.7	17.6	16.7	17.6
59 (36)	59 (36)	51 (31)	62 (38)	51 (31)	62 (38)
109 (67)	109 (67)	88 (54)	111 (68)	88 (54)	111 (68)
169 (105)	169 (105)	136 (84)	174 (108)	136 (84)	174 (108)
—	—	177 (109)	—	177 (109)	—
5.4 (17.7)	5.4 (17.7)	5.6 (18.4)	5.6 (18.4)	5.6 (18.4)	5.6 (18.4)
5.75 (18.9)	5.75 (18.9)	5.995 (19.7)	5.995 (19.7)	5.995 (19.7)	5.995 (19.7)
1ZZ-FE	1ZZ-FE	1AZ-FE	1AZ-FE	1AZ-FE	1AZ-FE
16-Valve, DOHC	16-Valve, DOHC	16-Valve, DOHC	16-Valve, DOHC	16-Valve, DOHC	16-Valve, DOHC
79.0 x 91.5 (3.11 x 3.60)	79.0 x 91.5 (3.11 x 3.60)	86.0 x 86.0 (3.39 x 3.39)	86.0 x 86.0 (3.39 x 3.39)	86.0 x 86.0 (3.39 x 3.39)	86.0 x 86.0 (3.39 x 3.39)
1794 (109.5)	1794 (109.5)	1998 (121.9)	1998 (121.9)	1998 (121.9)	1998 (121.9)
10.0	10.0	9.8	9.8	9.8	9.8
EFI	EFI	EFI	EFI	EFI	EFI
95 or higher	95 or higher	95 or higher	95 or higher	95 or higher	95 or higher
95/6000	95/6000	108 / 6000	108 / 6000	108 / 6000	108 / 6000
170/4200	170/4200	192 / 4000	192 / 4000	192 / 4000	192 / 4000
12-32, 48*3	12-32, 48*3	12-32, 48*3	12-32, 48*3	12-32, 48*3	12-32, 48*3
960, 1080*3	960, 1080*3	1200	1200	1200	1200
1.3	1.3	1.3	1.3	1.3	1.3
—	—	Dry, Single Plate Diaphragm	—	Dry, Single Plate Diaphragm	—
U341E	U341E	E354	U241E	E354	U241E
2.847	2.847	3.538	3.943	3.538	3.943
1.552	1.552	2.054	2.197	2.054	2.197
1.000	1.000	1.333	1.413	1.333	1.413
0.700	0.700	1.028	1.020	1.028	1.020
—	—	0.820	—	0.820	—
2.343	2.343	3.583	3.145	3.583	3.145
—	—	—	—	—	—
4.237	4.237	3.944	2.923	3.944	2.923
Ventilated Disc	Ventilated Disc	Ventilated Disc	Ventilated Disc	Ventilated Disc	Ventilated Disc
Solid Disc	Solid Disc	Solid Disc	Solid Disc	Solid Disc	Solid Disc
Drum	Drum	Drum	Drum	Drum	Drum
Tandem 8" + 9"	Tandem 8" + 9"	Tandem 8" + 9"	Tandem 8" + 9"	Tandem 8" + 9"	Tandem 8" + 9"
—	—	—	—	—	—
MacPherson Strut	MacPherson Strut	MacPherson Strut	MacPherson Strut	MacPherson Strut	MacPherson Strut
Double Wishbone	Double Wishbone	Double Wishbone	Double Wishbone	Double Wishbone	Double Wishbone
Standrad	Standrad	Standrad	Standrad	Standrad	Standrad
Standrad	Standrad	Standrad	Standrad	Standrad	Standrad
Rack and Pinion	Rack and Pinion	Rack and Pinion	Rack and Pinion	Rack and Pinion	Rack and Pinion
17.5	17.5	16.1	16.1	16.1	16.1
EPS	EPS	Integral Type	Integral Type	Integral Type	Integral Type

Item \ Area				EUROPE			
Body Type				4-Door Sedan			
Vehicle Grade				MID TECHNICAL			
Model Code				AZT250R-AEMEHW	AZT250L-AEMEHW	AZT250R-AEPEHW	AZT250L-AEPEHW
Major Dimensions & Vehicle Weights	Overall	Length	mm (in.)	4630 (182.3)	4630 (182.3)	4630 (182.3)	4630 (182.3)
		Width	mm (in.)	1760 (69.3)	1760 (69.3)	1760 (69.3)	1760 (69.3)
		Height	mm (in.)	1480 (58.3)	1480 (58.3)	1480 (58.3)	1480 (58.3)
	Wheel Base		mm (in.)	2700 (106.3)	2700 (106.3)	2700 (106.3)	2700 (106.3)
	Tread	Front	mm (in.)	1506 (59.3)	1506 (59.3)	1506 (59.3)	1506 (59.3)
		Rear	mm (in.)	1510 (59.4)	1510 (59.4)	1510 (59.4)	1510 (59.4)
	Room	Length	mm (in.)	2090 (82.3)	2090 (82.3)	2090 (82.3)	2090 (82.3)
		Width	mm (in.)	1485 (58.5)	1485 (58.5)	1485 (58.5)	1485 (58.5)
		Height	mm (in.)	1210 (47.6), 1160 (45.7)*1	1210 (47.6), 1160 (45.7)*1	1210 (47.6), 1160 (45.7)*1	1210 (47.6), 1160 (45.7)*1
	Overhang	Front	mm (in.)	910 (35.8)	910 (35.8)	910 (35.8)	910 (35.8)
		Rear	mm (in.)	1025 (40.4)	1025 (40.4)	1025 (40.4)	1025 (40.4)
	Min. Running Ground Clearance		mm (in.)	135 (5.3), 155 (6.1)*2	135 (5.3), 155 (6.1)*2	135 (5.3), 155 (6.1)*2	135 (5.3), 155 (6.1)*2
	Angle of Approach		degrees	13.1°, 14.5°*2	13.1°, 14.5°*2	13.1°, 14.5°*2	13.1°, 14.5°*2
	Angle of Departure		degrees	18.7°, 20.1°*2	18.7°, 20.1°*2	18.7°, 20.1°*2	18.7°, 20.1°*2
	Curb Weight	Front	kg (lb)	770 - 800 (1698 - 1764)	770 - 800 (1698 - 1764)	800 - 830 (1764 - 1830)	800 - 830 (1764 - 1830)
		Rear	kg (lb)	560 - 575 (1235 - 1268)	560 - 575 (1235 - 1268)	560 - 575 (1235 - 1268)	560 - 575 (1235 - 1268)
		Total	kg (lb)	1330 - 1375 (2933 - 3032)	1330 - 1375 (2933 - 3032)	1360 - 1405 (2999 - 3098)	1360 - 1405 (2999 - 3098)
	Gross Vehicle Weight	Front	kg (lb)	915 (2017)	915 (2017)	915 (2017)	915 (2017)
		Rear	kg (lb)	980 (2161)	980 (2161)	980 (2161)	980 (2161)
		Total	kg (lb)	1895 (4178)	1895 (4178)	1895 (4178)	1895 (4178)
	Fuel Tank Capacity		ℓ (Imp.gal.)	60 (15.9, 13.2)	60 (15.9, 13.2)	60 (15.9, 13.2)	60 (15.9, 13.2)
	Luggage Compartment Capacity		m³ (cu.ft.)	0.520 (18.4)	0.520 (18.4)	0.520 (18.4)	0.520 (18.4)
Performance	Max. Speed		km/h (mph)	210 (131)	210 (131)	205 (127)	205 (127)
	Max. Cruising Speed		km/h (mph)	—	—	—	—
	Acceleration	0 to 100 km/h	sec.	9.4	9.4	11.1	11.1
		0 to 400 m	sec.	16.6	16.6	17.6	17.6
	Max. Permissible Speed	1st Gear	km/h (mph)	56 (34)	56 (34)	63 (39)	63 (39)
		2nd Gear	km/h (mph)	96 (59)	96 (59)	114 (71)	114 (71)
		3rd Gear	km/h (mph)	149 (92)	149 (92)	177 (110)	177 (110)
		4th Gear	km/h (mph)	193 (119)	193 (119)	—	—
	Min. Turning Radius	Tire	m (ft.)	5.6 (18.4)	5.6 (18.4)	5.6 (18.4)	5.6 (18.4)
		Body	m (ft.)	5.995 (19.7)	5.995 (19.7)	5.995 (19.7)	5.995 (19.7)
Engine	Engine Type			1AZ-FSE	1AZ-FSE	1AZ-FSE	1AZ-FSE
	Valve Mechanism			16-Valve, DOHC	16-Valve, DOHC	16-Valve, DOHC	16-Valve, DOHC
	Bore x Stroke		mm (in.)	86.0 x 86.0 (3.39 x 3.39)	86.0 x 86.0 (3.39 x 3.39)	86.0 x 86.0 (3.39 x 3.39)	86.0 x 86.0 (3.39 x 3.39)
	Displacement		cm³ (cu.in.)	1998 (121.9)	1998 (121.9)	1998 (121.9)	1998 (121.9)
	Compression Ratio			11.0	11.0	11.0	11.0
	Fuel System			EFI	EFI	EFI	EFI
	Research Octane No. or Cetane No. (Diesel)			95 or higher	95 or higher	95 or higher	95 or higher
	Max. Output ( )		kW/rpm	108/5700	108/5700	108/5700	108/5700
	Max. Torque ( )		N·m/rpm	196/4000	196/4000	196/4000	196/4000
Engine Electrical	Battery Capacity (5HR)		Voltage & Amp. hr.	12-32, 48*3	12-32, 48*3	12-48	12-48
	Alternator Output		Watts	1200	1200	1200	1200
	Starter Output		kW	1.3, 1.6*3	1.3, 1.6*3	1.6	1.6
Chassis	Clutch Type			Dry, Single Plate Diaphragm	Dry, Single Plate Diaphragm	—	—
	Transaxle Type			E354	E354	U241E*4	U241E*4
	Transmission Gear Ratio	In First		3.538	3.538	3.943	3.943
		In Second		2.054	2.054	2.197	2.197
		In Third		1.333	1.333	1.413	1.413
		In Fourth		1.028	1.028	1.020	1.020
		In Fifth		0.820	0.820	—	—
		In Reverse		3.583	3.583	3.145	3.145
	Counter Gear Ratio			—	—	—	—
	Differential Gear Ratio (Final)			3.684	3.684	2.923	2.923
	Brake Type	Front		Ventilated Disc	Ventilated Disc	Ventilated Disc	Ventilated Disc
		Rear		Solid Disc	Solid Disc	Solid Disc	Solid Disc
	Parking Brake Type			Drum	Drum	Drum	Drum
	Brake Booster Type and Size		in.	Tandem 8" + 9"	Tandem 8" + 9"	Tandem 8" + 9"	Tandem 8" + 9"
	Proportioning Valve Type			—	—	—	—
	Suspension Type	Front		MacPherson Strut	MacPherson Strut	MacPherson Strut	MacPherson Strut
		Rear		Double Wishbone	Double Wishbone	Double Wishbone	Double Wishbone
	Stabilizer Bar	Front		Standrad	Standrad	Standrad	Standrad
		Rear		Standrad	Standrad	Standrad	Standrad
	Steering Gear Type			Rack and Pinion	Rack and Pinion	Rack and Pinion	Rack and Pinion
	Steering Gear Ratio (Overall)			16.1	16.1	16.1	16.1
	Power Steering Type			Integral Type	Integral Type	Integral Type	Integral Type

*1: With Sun Roof
*2: Rough Road Pack
*3: Option
*4: Snow Mord Type

EUROPE					
4-Door Sedan					
MID ELEGANT				ENTRY	
AZT250R-AEMGHW	AZT250L-AEMGHW	AZT250R-AEPGHW	AZT250L-AEPGHW	CDT250R-AEMNYW	CDT250L-AEMNYW
4630 (182.3)	4630 (182.3)	4630 (182.3)	4630 (182.3)	4630 (182.3)	4630 (182.3)
1760 (69.3)	1760 (69.3)	1760 (69.3)	1760 (69.3)	1760 (69.3)	1760 (69.3)
1480 (58.3)	1480 (58.3)	1480 (58.3)	1480 (58.3)	1480 (58.3)	1480 (58.3)
2700 (106.3)	2700 (106.3)	2700 (106.3)	2700 (106.3)	2700 (106.3)	2700 (106.3)
1506 (59.3)	1506 (59.3)	1506 (59.3)	1506 (59.3)	1506 (59.3)	1506 (59.3)
1510 (59.4)	1510 (59.4)	1510 (59.4)	1510 (59.4)	1510 (59.4)	1510 (59.4)
2090 (82.3)	2090 (82.3)	2090 (82.3)	2090 (82.3)	2090 (82.3)	2090 (82.3)
1485 (58.5)	1485 (58.5)	1485 (58.5)	1485 (58.5)	1485 (58.5)	1485 (58.5)
1210 (47.6), 1160 (45.7)*1	1210 (47.6), 1160 (45.7)*1	1210 (47.6), 1160 (45.7)*1	1210 (47.6), 1160 (45.7)*1	1210 (47.6), 1160 (45.7)*1	1210 (47.6), 1160 (45.7)*1
910 (35.8)	910 (35.8)	910 (35.8)	910 (35.8)	910 (35.8)	910 (35.8)
1025 (40.4)	1025 (40.4)	1025 (40.4)	1025 (40.4)	1025 (40.4)	1025 (40.4)
135 (5.3), 155 (6.1)*2	135 (5.3), 155 (6.1)*2	135 (5.3), 155 (6.1)*2	135 (5.3), 155 (6.1)*2	135 (5.3), 155 (6.1)*2	135 (5.3), 155 (6.1)*2
13.1°, 14.5°*2	13.1°, 14.5°*2	13.1°, 14.5°*2	13.1°, 14.5°*2	13.1°, 14.5°*2	13.1°, 14.5°*2
18.7°, 20.1°*2	18.7°, 20.1°*2	18.7°, 20.1°*2	18.7°, 20.1°*2	18.7°, 20.1°*2	18.7°, 20.1°*2
770 - 800 (1698 - 1764)	770 - 800 (1698 - 1764)	800 - 830 (1764 - 1830)	800 - 830 (1764 - 1830)	845 - 895 (1863 - 1973)	845 - 895 (1863 - 1973)
560 - 575 (1235 - 1268)	560 - 575 (1235 - 1268)	560 - 575 (1235 - 1268)	560 - 575 (1235 - 1268)	535 - 550 (1179 - 1213)	535 - 550 (1179 - 1213)
1330 - 1375 (2933 - 3032)	1330 - 1375 (2933 - 3032)	1360 - 1405 (2999 - 3098)	1360 - 1405 (2999 - 3098)	1380 - 1445 (3042 - 3186)	1380 - 1445 (3042 - 3186)
915 (2017)	915 (2017)	915 (2017)	915 (2017)	985 (2172)	985 (2172)
980 (2161)	980 (2161)	980 (2161)	980 (2161)	985 (2172)	985 (2172)
1895 (4178)	1895 (4178)	1895 (4178)	1895 (4178)	1970 (4344)	1970 (4344)
60 (15.9, 13.2)	60 (15.9, 13.2)	60 (15.9, 13.2)	60 (15.9, 13.2)	60 (15.9, 13.2)	60 (15.9, 13.2)
0.520 (18.4)	0.520 (18.4)	0.520 (18.4)	0.520 (18.4)	0.520 (18.4)	0.520 (18.4)
205 (127)	210 (131)	205 (127)	205 (127)	195 (121)	195 (121)
—	—	—	—	—	—
9.4	9.4	11.1	11.1	11.2	11.2
16.6	16.6	17.6	17.6	17.7	17.7
56 (34)	56 (34)	63 (39)	63 (39)	45 (27)	45 (27)
96 (59)	96 (59)	114 (71)	114 (71)	84 (52)	84 (52)
149 (92)	149 (92)	177 (110)	177 (110)	128 (79)	128 (79)
193 (119)	193 (119)	—	—	176 (109)	176 (109)
5.6 (18.4)	5.6 (18.4)	5.6 (18.4)	5.6 (18.4)	5.6 (18.4)	5.6 (18.4)
5.995 (19.7)	5.995 (19.7)	5.995 (19.7)	5.995 (19.7)	5.995 (19.7)	5.995 (19.7)
1AZ-FSE	1AZ-FSE	1AZ-FSE	1AZ-FSE	1CD-FTV	1CD-FTV
16-Valve, DOHC	16-Valve, DOHC	16-Valve, DOHC	16-Valve, DOHC	16-Valve, DOHC	16-Valve, DOHC
86.0 x 86.0 (3.39 x 3.39)	86.0 x 86.0 (3.39 x 3.39)	86.0 x 86.0 (3.39 x 3.39)	86.0 x 86.0 (3.39 x 3.39)	82.2 x 94.0 (3.24 x 3.70)	82.2 x 94.0 (3.24 x 3.70)
1998 (121.9)	1998 (121.9)	1998 (121.9)	1998 (121.9)	1995 (121.7)	1995 (121.7)
11.0	11.0	11.0	11.0	17.8	17.8
EFI	EFI	EFI	EFI	Common-Rail Type	Common-Rail Type
95 or higher	95 or higher	95 or higher	95 or higher	48 or higher	48 or higher
108 / 5700	108 / 5700	108 / 5700	108 / 5700	85 / 3600	85 / 3600
196 / 4000	196 / 4000	196 / 4000	196 / 4000	280 / 2000 - 2200	280 / 2000 - 2200
12-32, 48*3	12-32, 48*2	12-48	12-48	12-60	12-60
1200	1200	1200	1200	1200, 1080*3	1200, 1080*3
1.3, 1.6*3	1.3, 1.6*3	1.6	1.6	2.0	2.0
Dry, Single Plate Diaphragm	Dry, Single Plate Diaphragm	—	—	Dry, Single Plate Diaphragm	Dry, Single Plate Diaphragm
E354	E354	U241E*4	U241E*4	E357	E357
3.538	3.538	3.943	3.943	3.538	3.538
2.054	2.054	2.197	2.197	1.913	1.913
1.333	1.333	1.413	1.413	1.258	1.258
1.028	1.028	1.020	1.020	0.918	0.918
0.820	0.820	—	—	0.690	0.690
3.583	3.583	3.145	3.145	3.583	3.583
—	—	—	—	—	—
3.684	3.684	2.923	2.923	3.684	3.684
Ventilated Disc	Ventilated Disc	Ventilated Disc	Ventilated Disc	Ventilated Disc	Ventilated Disc
Solid Disc	Solid Disc	Solid Disc	Solid Disc	Solid Disc	Solid Disc
Drum	Drum	Drum	Drum	Drum	Drum
Tandem 8" + 9"	Tandem 8" + 9"	Tandem 8" + 9"	Tandem 8" + 9"	Tandem 8" + 9"	Tandem 8" + 9"
—	—	—	—	—	—
MacPherson Strut	MacPherson Strut	MacPherson Strut	MacPherson Strut	MacPherson Strut	MacPherson Strut
Double Wishbone	Double Wishbone	Double Wishbone	Double Wishbone	Double Wishbone	Double Wishbone
Standrad	Standrad	Standrad	Standrad	Standrad	Standrad
Standrad	Standrad	Standrad	Standrad	Standrad	Standrad
Rack and Pinion	Rack and Pinion	Rack and Pinion	Rack and Pinion	Rack and Pinion	Rack and Pinion
16.1	16.1	16.1	16.1	16.1	16.1
Integral Type	Integral Type	Integral Type	Integral Type	Integral Type	Integral Type

Item \ Area				EUROPE			
Body Type				4-Door Sedan			
Vehicle Grade				MID TECHNICAL		MID ELEGANT	
Model Code				CDT250R-AEMEYW	CDT250L-AEMEYW	CDY250R-AEMGYW	CDT250L-AEMGYW
Major Dimensions & Vehicle Weights	Overall	Length	mm (in.)	4630 (182.3)	4630 (182.3)	4630 (182.3)	4630 (182.3)
		Width	mm (in.)	1760 (69.3)	1760 (69.3)	1760 (69.3)	1760 (69.3)
		Height	mm (in.)	1480 (58.3)	1480 (58.3)	1480 (58.3)	1480 (58.3)
	Wheel Base		mm (in.)	2700 (106.3)	2700 (106.3)	2700 (106.3)	2700 (106.3)
	Tread	Front	mm (in.)	1506 (59.3)	1506 (59.3)	1506 (59.3)	1506 (59.3)
		Rear	mm (in.)	1510 (59.4)	1510 (59.4)	1510 (59.4)	1510 (59.4)
	Room	Length	mm (in.)	2090 (82.3)	2090 (82.3)	2090 (82.3)	2090 (82.3)
		Width	mm (in.)	1485 (58.5)	1485 (58.5)	1485 (58.5)	1485 (58.5)
		Height	mm (in.)	1210 (47.6), 1160 (45.7)*1	1210 (47.6), 1160 (45.7)*1	1210 (47.6), 1160 (45.7)*1	1210 (47.6), 1160 (45.7)*1
	Overhang	Front	mm (in.)	910 (35.8)	910 (35.8)	910 (35.8)	910 (35.8)
		Rear	mm (in.)	1025 (40.4)	1025 (40.4)	1025 (40.4)	1025 (40.4)
	Min. Running Ground Clearance		mm (in.)	135 (5.3), 155 (6.1)*2	135 (5.3), 155 (6.1)*2	135 (5.3), 155 (6.1)*2	135 (5.3), 155 (6.1)*2
	Angle of Approach		degrees	13.1°, 14.5°*2	13.1°, 14.5°*2	13.1°, 14.5°*2	13.1°, 14.5°*2
	Angle of Departure		degrees	18.7°, 20.1°*2	18.7°, 20.1°*2	18.7°, 20.1°*2	18.7°, 20.1°*2
	Curb Weight	Front	kg (lb)	845 - 900 (1863 - 1984)	845 - 900 (1863 - 1984)	845 - 900 (1863 - 1984)	845 - 900 (1863 - 1984)
		Rear	kg (lb)	535 - 565 (1179 - 1246)	535 - 565 (1179 - 1246)	535 - 565 (1179 - 1246)	535 - 565 (1179 - 1246)
		Total	kg (lb)	1380 - 1465 (3042 - 3230)	1380 - 1465 (3042 - 3230)	1380 - 1465 (3042 - 3230)	1380 - 1465 (3042 - 3230)
	Gross Vehicle Weight	Front	kg (lb)	985 (2172)	985 (2172)	985 (2172)	985 (2172)
		Rear	kg (lb)	985 (2172)	985 (2172)	985 (2172)	985 (2172)
		Total	kg (lb)	1970 (4344)	1970 (4344)	1970 (4344)	1970 (4344)
	Fuel Tank Capacity		ℓ (Imp.gal.)	60 (15.9, 13.2)	60 (15.9, 13.2)	60 (15.9, 13.2)	60 (15.9, 13.2)
	Luggage Compartment Capacity		m³ (cu.ft.)	0.520 (18.4)	0.520 (18.4)	0.520 (18.4)	0.520 (18.4)
Performance	Max. Speed		km/h (mph)	195 (121)	195 (121)	195 (121)	195 (121)
	Max. Cruising Speed		km/h (mph)	—	—	—	—
	Acceleration	0 to 100 km/h	sec.	11.2	11.2	11.2	11.2
		0 to 400 m	sec.	17.7	17.7	17.7	17.7
	Max. Permissible Speed	1st Gear	km/h (mph)	45 (27)	45 (27)	45 (27)	45 (27)
		2nd Gear	km/h (mph)	84 (52)	84 (52)	84 (52)	84 (52)
		3rd Gear	km/h (mph)	128 (79)	128 (79)	128 (79)	128 (79)
		4th Gear	km/h (mph)	176 (109)	176 (109)	176 (109)	176 (109)
	Min. Turning Radius	Tire	m (ft.)	5.6 (18.4)	5.6 (18.4)	5.6 (18.4)	5.6 (18.4)
		Body	m (ft.)	5.995 (19.7)	5.995 (19.7)	5.995 (19.7)	5.995 (19.7)
Engine	Engine Type			1CD-FTV	1CD-FTV	1CD-FTV	1CD-FTV
	Valve Mechanism			16-Valve, DOHC	16-Valve, DOHC	16-Valve, DOHC	16-Valve, DOHC
	Bore x Stroke		mm (in.)	82.2 x 94.0 (3.24 x 3.70)	82.2 x 94.0 (3.24 x 3.70)	82.2 x 94.0 (3.24 x 3.70)	82.2 x 94.0 (3.24 x 3.70)
	Displacement		cm³ (cu.in.)	1995 (121.7)	1995 (121.7)	1995 (121.7)	1995 (121.7)
	Compression Ratio			17.8	17.8	17.8	17.8
	Fuel System			Common-Rail Type	Common-Rail Type	Common-Rail Type	Common-Rail Type
	Research Octane No. or Cetane No. (Diesel)			48 or higher	48 or higher	48 or higher	48 or higher
	Max. Output ( )		kW/rpm	85/3600	85/3600	85/3600	85/3600
	Max. Torque ( )		N·m/rpm	280/2000 - 2200	280/2000 - 2200	280/2000 - 2200	280/2000 - 2200
Engine Electrical	Battery Capacity (5HR)		Voltage & Amp. hr.	12-60	12-60	12-60	12-60
	Alternator Output		Watts	1200	1200	1200	1200
	Starter Output		kW	2.0	2.0	2.0	2.0
Chassis	Clutch Type			Dry, Single Plate Diaphragm	Dry, Single Plate Diaphragm	Dry, Single Plate Diaphragm	Dry, Single Plate Diaphragm
	Transaxle Type			E357	E357	E357	E357
	Transmission Gear Ratio	In First		3.538	3.538	3.538	3.538
		In Second		1.913	1.913	1.913	1.913
		In Third		1.258	1.258	1.258	1.258
		In Fourth		0.918	0.918	0.918	0.918
		In Fifth		0.690	0.690	0.690	0.690
		In Reverse		3.583	3.583	3.583	3.583
	Counter Gear Ratio			—	—	—	—
	Differential Gear Ratio (Final)			3.684	3.684	3.684	3.684
	Brake Type	Front		Ventilated Disc	Ventilated Disc	Ventilated Disc	Ventilated Disc
		Rear		Solid Disc	Solid Disc	Solid Disc	Solid Disc
	Parking Brake Type			Drum	Drum	Drum	Drum
	Brake Booster Type and Size		in.	Tandem 8" + 9"	Tandem 8" + 9"	Tandem 8" + 9"	Tandem 8" + 9"
	Proportioning Valve Type			—	—	—	—
	Suspension Type	Front		MacPherson Strut	MacPherson Strut	MacPherson Strut	MacPherson Strut
		Rear		Double Wishbone	Double Wishbone	Double Wishbone	Double Wishbone
	Stabilizer Bar	Front		Standrad	Standrad	Standrad	Standrad
		Rear		Standrad	Standrad	Standrad	Standrad
	Steering Gear Type			Rack and Pinion	Rack and Pinion	Rack and Pinion	Rack and Pinion
	Steering Gear Ratio (Overall)			16.1	16.1	16.1	16.1
	Power Steering Type			Integral Type	Integral Type	Integral Type	Integral Type

*1: With Sun Roof
*2: Rough Road Pack
*3: Option

EUROPE					
5-Door Liftback					
ENTRY					
ZZT250R-ALMNKW	ZZT250L-ALMNKW	ZZT251R-ALMNKW	ZZT251L-ALMNKW	ZZT251R-ALPNKW	ZZT251L-ALPNKW
4630 (182.3)	4630 (182.3)	4630 (182.3)	4630 (182.3)	4630 (182.3)	4630 (182.3)
1760 (69.3)	1760 (69.3)	1760 (69.3)	1760 (69.3)	1760 (69.3)	1760 (69.3)
1480 (58.3)	1480 (58.3)	1480 (58.3)	1480 (58.3)	1480 (58.3)	1480 (58.3)
2700 (106.3)	2700 (106.3)	2700 (106.3)	2700 (106.3)	2700 (106.3)	2700 (106.3)
1506 (59.3)	1506 (59.3)	1506 (59.3)	1506 (59.3)	1506 (59.3)	1506 (59.3)
1510 (59.4)	1510 (59.4)	1510 (59.4)	1510 (59.4)	1510 (59.4)	1510 (59.4)
2090 (82.3)	2090 (82.3)	2090 (82.3)	2090 (82.3)	2090 (82.3)	2090 (82.3)
1485 (58.5)	1485 (58.5)	1485 (58.5)	1485 (58.5)	1485 (58.5)	1485 (58.5)
1210 (47.6), 1160 (45.7)*1	1210 (47.6), 1160 (45.7)*1	1210 (47.6), 1160 (45.7)*1	1210 (47.6), 1160 (45.7)*1	1210 (47.6), 1160 (45.7)*1	1210 (47.6), 1160 (45.7)*1
910 (35.8)	910 (35.8)	910 (35.8)	910 (35.8)	910 (35.8)	910 (35.8)
1025 (40.4)	1025 (40.4)	1025 (40.4)	1025 (40.4)	1025 (40.4)	1025 (40.4)
135 (5.3), 155 (6.1)*2	135 (5.3), 155 (6.1)*2	135 (5.3), 155 (6.1)*2	135 (5.3), 155 (6.1)*2	135 (5.3), 155 (6.1)*2	135 (5.3), 155 (6.1)*2
13.1°, 14.5°*2	13.1°, 14.5°*2	13.1°, 14.5°*2	13.1°, 14.5°*2	13.1°, 14.5°*2	13.1°, 14.5°*2
18.7°, 20.1°*2	18.7°, 20.1°*2	18.7°, 20.1°*2	18.7°, 20.1°*2	18.7°, 20.1°*2	18.7°, 20.1°*2
710 - 750 (1565 - 1653)	710 - 750 (1565 - 1653)	710 - 750 (1565 - 1653)	710 - 750 (1565 - 1653)	730 - 770 (1609 - 1698)	730 - 770 (1609 - 1698)
555 - 570 (1224 - 1257)	555 - 570 (1224 - 1257)	555 - 580 (1224 - 1279)	555 - 580 (1224 - 1279)	555 - 580 (1224 - 1279)	555 - 580 (1224 - 1279)
1265 - 1320 (2789 - 2910)	1265 - 1320 (2789 - 2910)	1265 - 1330 (2789 - 2932)	1265 - 1330 (2789 - 2932)	1285 - 1350 (2833 - 2977)	1285 - 1350 (2833 - 2977)
840 (1852)	840 (1852)	840 (1852)	840 (1852)	840 (1852)	840 (1852)
980 (2161)	980 (2161)	980 (2161)	980 (2161)	980 (2161)	980 (2161)
1820 (4013)	1820 (4013)	1820 (4013)	1820 (4013)	1820 (4013)	1820 (4013)
60 (15.9, 13.2)	60 (15.9, 13.2)	60 (15.9, 13.2)	60 (15.9, 13.2)	60 (15.9, 13.2)	60 (15.9, 13.2)
0.510 (18.0)	0.510 (18.0)	0.510 (18.0)	0.510 (18.0)	0.510 (18.0)	0.510 (18.0)
190 (118)	195 (121)	200 (124)	200 (124)	195 (121)	195 (121)
—	—	—	—	—	—
12.0	12.0	10.3	10.3	11.6	11.6
18.1	18.1	17.1	17.1	17.9	17.9
47 (29)	47 (29)	51 (31)	51 (31)	59 (36)	59 (36)
87 (54)	87 (54)	95 (59)	95 (59)	109 (67)	109 (67)
127 (78)	127 (78)	139 (86)	139 (86)	169 (105)	169 (105)
172 (106)	172 (106)	176 (109)	176 (109)	—	—
5.4 (17.7)	5.4 (17.7)	5.4 (17.7)	5.4 (17.7)	5.4 (17.7)	5.4 (17.7)
5.75 (18.9)	5.75 (18.9)	5.75 (18.9)	5.75 (18.9)	5.75 (18.9)	5.75 (18.9)
3ZZ-FE	3ZZ-FE	1ZZ-FE	1ZZ-FE	1ZZ-FE	1ZZ-FE
16-Valve, DOHC	16-Valve, DOHC	16-Valve, DOHC	16-Valve, DOHC	16-Valve, DOHC	16-Valve, DOHC
79.0 x 81.5 (3.11 x 3.21)	79.0 x 81.5 (3.11 x 3.21)	79.0 x 91.5 (3.11 x 3.60)	79.0 x 91.5 (3.11 x 3.60)	79.0 x 91.5 (3.11 x 3.60)	79.0 x 91.5 (3.11 x 3.60)
1598 (97.5)	1598 (97.5)	1794 (109.5)	1794 (109.5)	1794 (109.5)	1794 (109.5)
10.5	10.5	10.0	10.0	10.0	10.0
EFI	EFI	EFI	EFI	EFI	EFI
95 or higher	95 or higher	95 or higher	95 or higher	95 or higher	95 or higher
81/6000	81/6000	95/6000	95/6000	95/6000	95/6000
150/3800	150/3800	170/4200	170/4200	170/4200	170/4200
12-32, 48*3	12-32, 48*3	12-32, 48*3	12-32, 48*3	12-32, 48*3	12-32, 48*3
960, 1080*3	960, 1080*3	960, 1080*3	960, 1080*3	960, 1080*3	960, 1080*3
1.3	1.3	1.3	1.3	1.3	1.3
Dry, Single Plate Diaphragm	Dry, Single Plate Diaphragm	Dry, Single Plate Diaphragm	Dry, Single Plate Diaphragm	—	—
C50	C50	C250	C250	U341E	U341E
3.545	3.545	3.545	3.545	2.847	2.847
1.904	1.904	1.904	1.904	1.552	1.552
1.310	1.310	1.310	1.310	1.000	1.000
0.969	0.969	1.031	1.031	0.700	0.700
0.815	0.815	0.815	0.815	—	—
3.250	3.250	3.250	3.250	2.343	2.343
—	—	—	—	—	—
4.312	4.312	3.941	3.941	4.237	4.237
Ventilated Disc	Ventilated Disc	Ventilated Disc	Ventilated Disc	Ventilated Disc	Ventilated Disc
Solid Disc	Solid Disc	Solid Disc	Solid Disc	Solid Disc	Solid Disc
Drum	Drum	Drum	Drum	Drum	Drum
Tandem 8" + 9"	Tandem 8" + 9"	Tandem 8" + 9"	Tandem 8" + 9"	Tandem 8" + 9"	Tandem 8" + 9"
—	—	—	—	—	—
MacPherson Strut	MacPherson Strut	MacPherson Strut	MacPherson Strut	MacPherson Strut	MacPherson Strut
Double Wishbone	Double Wishbone	Double Wishbone	Double Wishbone	Double Wishbone	Double Wishbone
Standrad	Standrad	Standrad	Standrad	Standrad	Standrad
Standrad	Standrad	Standrad	Standrad	Standrad	Standrad
Rack and Pinion	Rack and Pinion	Rack and Pinion	Rack and Pinion	Rack and Pinion	Rack and Pinion
17.5	17.5	17.5	17.5	17.5	17.5
EPS	EPS	EPS	EPS	EPS	EPS

Item \ Area				EUROPE			
Body Type				5-Door Liftback			
Vehicle Grade				MID TECHNICAL			
Model Code				ZZT251R-ALMEKW	ZZT251L-ALMEKW	ZZT251R-ALPEKW	ZZT251L-ALPEKW
Major Dimensions & Vehicle Weights	Overall	Length	mm (in.)	4630 (182.3)	4630 (182.3)	4630 (182.3)	4630 (182.3)
		Width	mm (in.)	1760 (69.3)	1760 (69.3)	1760 (69.3)	1760 (69.3)
		Height	mm (in.)	1480 (58.3)	1480 (58.3)	1480 (58.3)	1480 (58.3)
	Wheel Base		mm (in.)	2700 (106.3)	2700 (106.3)	2700 (106.3)	2700 (106.3)
	Tread	Front	mm (in.)	1506 (59.3)	1506 (59.3)	1506 (59.3)	1506 (59.3)
		Rear	mm (in.)	1510 (59.4)	1510 (59.4)	1510 (59.4)	1510 (59.4)
	Room	Length	mm (in.)	2090 (82.3)	2090 (82.3)	2090 (82.3)	2090 (82.3)
		Width	mm (in.)	1485 (58.5)	1485 (58.5)	1485 (58.5)	1485 (58.5)
		Height	mm (in.)	1210 (47.6), 1160 (45.7)*1	1210 (47.6), 1160 (45.7)*1	1210 (47.6), 1160 (45.7)*1	1210 (47.6), 1160 (45.7)*1
	Overhang	Front	mm (in.)	910 (35.8)	910 (35.8)	910 (35.8)	910 (35.8)
		Rear	mm (in.)	1025 (40.4)	1025 (40.4)	1025 (40.4)	1025 (40.4)
	Min. Running Ground Clearance		mm (in.)	135 (5.3), 155 (6.1)*2	135 (5.3), 155 (6.1)*2	135 (5.3), 155 (6.1)*2	135 (5.3), 155 (6.1)*2
	Angle of Approach		degrees	13.1°, 14.5°*2	13.1°, 14.5°*2	13.1°, 14.5°*2	13.1°, 14.5°*2
	Angle of Departure		degrees	18.7°, 20.1°*2	18.7°, 20.1°*2	18.7°, 20.1°*2	18.7°, 20.1°*2
	Curb Weight	Front	kg (lb)	720 - 750 (1587 - 1653)	720 - 750 (1587 - 1653)	730 - 770 (1609 - 1698)	730 - 770 (1609 - 1698)
		Rear	kg (lb)	555 - 580 (1224 - 1279)	555 - 580 (1224 - 1279)	555 - 580 (1224 - 1279)	555 - 580 (1224 - 1279)
		Total	kg (lb)	1275 - 1330 (2811 - 2932)	1275 - 1330 (2811 - 2932)	1285 - 1350 (2833 - 2977)	1285 - 1350 (2833 - 2977)
	Gross Vehicle Weight	Front	kg (lb)	840 (1852)	840 (1852)	840 (1852)	840 (1852)
		Rear	kg (lb)	980 (2161)	980 (2161)	980 (2161)	980 (2161)
		Total	kg (lb)	1820 (4013)	1820 (4013)	1820 (4013)	1820 (4013)
	Fuel Tank Capacity		ℓ (Imp.gal.)	60 (15.9, 13.2)	60 (15.9, 13.2)	60 (15.9, 13.2)	60 (15.9, 13.2)
	Luggage Compartment Capacity		m³ (cu.ft.)	0.510 (18.0)	0.510 (18.0)	0.510 (18.0)	0.510 (18.0)
Performance	Max. Speed		km/h (mph)	200 (124)	200 (124)	195 (121)	195 (121)
	Max. Cruising Speed		km/h (mph)	—	—	—	—
	Acceleration	0 to 100 km/h	sec.	10.3	10.3	11.6	11.6
		0 to 400 m	sec.	17.1	17.1	17.9	17.9
	Max. Permissible Speed	1st Gear	km/h (mph)	51 (31)	51 (31)	59 (36)	59 (36)
		2nd Gear	km/h (mph)	95 (59)	95 (59)	109 (67)	109 (67)
		3rd Gear	km/h (mph)	139 (86)	139 (86)	169 (105)	169 (105)
		4th Gear	km/h (mph)	176 (109)	176 (109)	—	—
	Min. Turning Radius	Tire	m (ft.)	5.4 (17.7)	5.4 (17.7)	5.4 (17.7)	5.4 (17.7)
		Body	m (ft.)	5.75 (18.9)	5.75 (18.9)	5.75 (18.9)	5.75 (18.9)
Engine	Engine Type			1ZZ-FE	1ZZ-FE	1ZZ-FE	1ZZ-FE
	Valve Mechanism			16-Valve, DOHC	16-Valve, DOHC	16-Valve, DOHC	16-Valve, DOHC
	Bore x Stroke		mm (in.)	79.0 x 91.5 (3.11 x 3.60)	79.0 x 91.5 (3.11 x 3.60)	79.0 x 91.5 (3.11 x 3.60)	79.0 x 91.5 (3.11 x 3.60)
	Displacement		cm³ (cu.in.)	1794 (109.5)	1794 (109.5)	1794 (109.5)	1794 (109.5)
	Compression Ratio			10.0	10.0	10.0	10.0
	Fuel System			EFI	EFI	EFI	EFI
	Research Octane No. or Cetane No. (Diesel)			95 or higher	95 or higher	95 or higher	95 or higher
	Max. Output ( )		kW/rpm	95/6000	95/6000	95/6000	95/6000
	Max. Torque ( )		N·m/rpm	170/4200	170/4200	170/4200	170/4200
Engine Electrical	Battery Capacity (5HR)		Voltage & Amp. hr.	12-32, 40*3	12-32, 40*3	12-32, 40*3	12-32, 40*3
	Alternator Output		Watts	960, 1080*3	960, 1080*3	960, 1080*3	960, 1080*3
	Starter Output		kW	1.3	1.3	1.3	1.3
Chassis	Clutch Type			Dry, Single Plate Diaphragm	Dry, Single Plate Diaphragm	—	—
	Transaxle Type			C250	C250	U341E	U341E
	Transmission Gear Ratio	In First		3.545	3.545	2.847	2.847
		In Second		1.904	1.904	1.552	1.552
		In Third		1.310	1.310	1.000	1.000
		In Fourth		1.031	1.031	0.700	0.700
		In Fifth		0.815	0.815	—	—
		In Reverse		3.250	3.250	2.343	2.343
	Counter Gear Ratio			—	—	—	—
	Differential Gear Ratio (Final)			3.941	3.941	4.237	4.237
	Brake Type	Front		Ventilated Disc	Ventilated Disc	Ventilated Disc	Ventilated Disc
		Rear		Solid Disc	Solid Disc	Solid Disc	Solid Disc
	Parking Brake Type			Drum	Drum	Drum	Drum
	Brake Booster Type and Size		in.	Tandem 8"+ 9"	Tandem 8"+ 9"	Tandem 8"+ 9"	Tandem 8"+ 9"
	Proportioning Valve Type			—	—	—	—
	Suspension Type	Front		MacPherson Strut	MacPherson Strut	MacPherson Strut	MacPherson Strut
		Rear		Double Wishbone	Double Wishbone	Double Wishbone	Double Wishbone
	Stabilizer Bar	Front		Standard	Standard	Standard	Standard
		Rear		Standard	Standard	Standard	Standard
	Steering Gear Type			Rack and Pinion	Rack and Pinion	Rack and Pinion	Rack and Pinion
	Steering Gear Ratio (Overall)			17.5	17.5	17.5	17.5
	Power Steering Type			EPS	EPS	EPS	EPS

*1: With Sun Roof
*2: Rough Road Pack
*3: Option

	EUROPE					
	5-Door Liftback					
	MID ELEGANT				MID TECHNICAL	
	ZZT251R-ALMGKW	ZZT251L-ALMGKW	ZZT251R-ALPGKW	ZZT251L-ALPGKW	AZT250R-ALMEHW	AZT250L-ALMEHW
5	4630 (182.3)	4630 (182.3)	4630 (182.3)	4630 (182.3)	4630 (182.3)	4630 (182.3)
	1760 (69.3)	1760 (69.3)	1760 (69.3)	1760 (69.3)	1760 (69.3)	1760 (69.3)
	1480 (58.3)	1480 (58.3)	1480 (58.3)	1480 (58.3)	1480 (58.3)	1480 (58.3)
	2700 (106.3)	2700 (106.3)	2700 (106.3)	2700 (106.3)	2700 (106.3)	2700 (106.3)
	1506 (59.3)	1506 (59.3)	1506 (59.3)	1506 (59.3)	1506 (59.3)	1506 (59.3)
10	1510 (59.4)	1510 (59.4)	1510 (59.4)	1510 (59.4)	1510 (59.4)	1510 (59.4)
	2090 (82.3)	2090 (82.3)	2090 (82.3)	2090 (82.3)	2090 (82.3)	2090 (82.3)
	1485 (58.5)	1485 (58.5)	1485 (58.5)	1485 (58.5)	1485 (58.5)	1485 (58.5)
	1210 (47.6), 1160 (45.7)*1	1210 (47.6), 1160 (45.7)*1	1210 (47.6), 1160 (45.7)*1	1210 (47.6), 1160 (45.7)*1	1210 (47.6), 1160 (45.7)*1	1210 (47.6), 1160 (45.7)*1
	910 (35.8)	910 (35.8)	910 (35.8)	910 (35.8)	910 (35.8)	910 (35.8)
15	1025 (40.4)	1025 (40.4)	1025 (40.4)	1025 (40.4)	1025 (40.4)	1025 (40.4)
	135 (5.3), 155 (6.1)*2	135 (5.3), 155 (6.1)*2	135 (5.3), 155 (6.1)*2	135 (5.3), 155 (6.1)*2	135 (5.3), 155 (6.1)*2	135 (5.3), 155 (6.1)*2
	13.1°, 14.5°*2	13.1°, 14.5°*2	13.1°, 14.5°*2	13.1°, 14.5°*2	13.1°, 14.5°*2	13.1°, 14.5°*2
	18.7°, 20.1°*2	18.7°, 20.1°*2	18.7°, 20.1°*2	18.7°, 20.1°*2	18.7°, 20.1°*2	18.7°, 20.1°*2
	720 - 750 (1587 - 1653)	720 - 750 (1587 - 1653)	730 - 770 (1609 - 1698)	730 - 770 (1609 - 1698)	770 - 800 (1698 - 1764)	770 - 800 (1698 - 1764)
20	555 - 580 (1224 - 1279)	555 - 580 (1224 - 1279)	555 - 580 (1224 - 1279)	555 - 580 (1224 - 1279)	565 - 580 (1246 - 1279)	565 - 580 (1246 - 1279)
	1275 - 1330 (2811 - 2932)	1275 - 1330 (2811 - 2932)	1285 - 1350 (2833 - 2977)	1285 - 1350 (2833 - 2977)	1335 - 1380 (2944 - 3043)	1335 - 1380 (2944 - 3043)
	840 (1852)	840 (1852)	840 (1852)	840 (1852)	915 (2017)	915 (2017)
	980 (2161)	980 (2161)	980 (2161)	980 (2161)	980 (2161)	980 (2161)
	1820 (4013)	1820 (4013)	1820 (4013)	1820 (4013)	1895 (4178)	1895 (4178)
25	60 (15.9, 13.2)	60 (15.9, 13.2)	60 (15.9, 13.2)	60 (15.9, 13.2)	60 (15.9, 13.2)	60 (15.9, 13.2)
	0.510 (18.0)	0.510 (18.0)	0.510 (18.0)	0.510 (18.0)	0.510 (18.0)	0.510 (18.0)
	200 (124)	200 (124)	195 (121)	195 (121)	210 (121)	210 (121)
		—	—	—	—	—
	10.3	10.3	11.6	11.6	9.4	9.4
30	17.1	17.1	17.9	17.9	16.6	16.6
	51 (31)	51 (31)	59 (36)	59 (36)	56 (34)	56 (34)
	95 (59)	95 (59)	109 (67)	109 (67)	96 (59)	96 (59)
	139 (86)	139 (86)	169 (105)	169 (105)	149 (92)	149 (92)
	176 (109)	176 (109)	—	—	193 (119)	193 (119)
35	5.4 (17.7)	5.4 (17.7)	5.4 (17.7)	5.4 (17.7)	5.6 (18.4)	5.6 (18.4)
	5.75 (18.9)	5.75 (18.9)	5.75 (18.9)	5.75 (18.9)	5.995 (19.7)	5.995 (19.7)
	1ZZ-FE	1ZZ-FE	1ZZ-FE	1ZZ-FE	1AZ-FSE	1AZ-FSE
	16-Valve, DOHC	16-Valve, DOHC	16-Valve, DOHC	16-Valve, DOHC	16-Valve, DOHC	16-Valve, DOHC
	79.0 x 91.5 (3.11 x 3.60)	79.0 x 91.5 (3.11 x 3.60)	79.0 x 91.5 (3.11 x 3.60)	79.0 x 91.5 (3.11 x 3.60)	86.0 x 86.0 (3.39 x 3.39)	86.0 x 86.0 (3.39 x 3.39)
40	1794 (109.5)	1794 (109.5)	1794 (109.5)	1794 (109.5)	1998 (121.9)	1998 (121.9)
	10.0	10.0	10.0	10.0	11.0	11.0
	EFI	EFI	EFI	EFI	EFI	EFI
	95 or higher	95 or higher	95 or higher	95 or higher	95 or higher	95 or higher
	95 / 6000	95 / 6000	95 / 6000	95 / 6000	108 / 5700	108 / 5700
45	170 / 4200	170 / 4200	170 / 4200	170 / 4200	196 / 4000	196 / 4000
	12-32, 40*3	12-32, 40*3	12-32, 40*3	12-32, 40*3	12-32, 40*3	12-32, 40*3
	960, 1080*3	960, 1080*3	960, 1080*3	960, 1080*3	1200	1200
	1.3	1.3	1.3	1.3	1.3, 1.6*3	1.3, 1.6*3
	Dry, Single Plate Diaphragm	Dry, Single Plate Diaphragm	—	—	Dry, Single Plate Diaphragm	Dry, Single Plate Diaphragm
50	C250	C250	U341E	U341E	E354	E354
	3.545	3.545	2.847	2.847	3.538	3.538
	1.904	1.904	1.552	1.552	2.054	2.054
	1.310	1.310	1.000	1.000	1.333	1.333
	1.031	1.031	0.700	0.700	1.028	1.028
55	0.815	0.815	—	—	0.820	0.820
	3.250	3.250	2.343	2.343	3.583	3.583
	—	—	—	—	—	—
	3.941	3.941	4.237	4.237	3.684	3.684
	Ventilated Disc	Ventilated Disc	Ventilated Disc	Ventilated Disc	Ventilated Disc	Ventilated Disc
60	Solid Disc	Solid Disc	Solid Disc	Solid Disc	Solid Disc	Solid Disc
	Drum	Drum	Drum	Drum	Drum	Drum
	Tandem 8"+ 9"	Tandem 8"+ 9"	Tandem 8"+ 9"	Tandem 8"+ 9"	Tandem 8"+ 9"	Tandem 8"+ 9"
	—	—	—	—	—	—
	MacPherson Strut	MacPherson Strut	MacPherson Strut	MacPherson Strut	MacPherson Strut	MacPherson Strut
65	Double Wishbone	Double Wishbone	Double Wishbone	Double Wishbone	Double Wishbone	Double Wishbone
	Standard	Standard	Standard	Standard	Standard	Standard
	Standard	Standard	Standard	Standard	Standard	Standard
	Rack and Pinion	Rack and Pinion	Rack and Pinion	Rack and Pinion	Rack and Pinion	Rack and Pinion
	17.5	17.5	17.5	17.5	16.1	16.1
70	EPS	EPS	EPS	EPS	Integral Type	Integral Type

Item \ Area				EUROPE			
Body Type				5-Door Liftback			
Vehicle Grade				MID TECHNICAL		MID ELEGANT	
Model Code				AZT250R-ALPEHW	AZT250L-ALPEHW	AZT250R-ALMGHW	AZT250L-ALMGHW
Major Dimensions & Vehicle Weights	Overall	Length	mm (in.)	4630 (182.3)	4630 (182.3)	4630 (182.3)	4630 (182.3)
		Width	mm (in.)	1760 (69.3)	1760 (69.3)	1760 (69.3)	1760 (69.3)
		Height	mm (in.)	1480 (58.3)	1480 (58.3)	1480 (58.3)	1480 (58.3)
	Wheel Base		mm (in.)	2700 (106.3)	2700 (106.3)	2700 (106.3)	2700 (106.3)
	Tread	Front	mm (in.)	1506 (59.3)	1506 (59.3)	1506 (59.3)	1506 (59.3)
		Rear	mm (in.)	1510 (59.4)	1510 (59.4)	1510 (59.4)	1510 (59.4)
	Room	Length	mm (in.)	2090 (82.3)	2090 (82.3)	2090 (82.3)	2090 (82.3)
		Width	mm (in.)	1485 (58.5)	1485 (58.5)	1485 (58.5)	1485 (58.5)
		Height	mm (in.)	1210 (47.6), 1160 (45.7)*1	1210 (47.6), 1160 (45.7)*1	1210 (47.6), 1160 (45.7)*1	1210 (47.6), 1160 (45.7)*1
	Overhang	Front	mm (in.)	910 (35.8)	910 (35.8)	910 (35.8)	910 (35.8)
		Rear	mm (in.)	1025 (40.4)	1025 (40.4)	1025 (40.4)	1025 (40.4)
	Min. Running Ground Clearance		mm (in.)	135 (5.3), 155 (6.1)*2	135 (5.3), 155 (6.1)*2	135 (5.3), 155 (6.1)*2	135 (5.3), 155 (6.1)*2
	Angle of Approach		degrees	13.1°, 14.5°*2	13.1°, 14.5°*2	13.1°, 14.5°*2	13.1°, 14.5°*2
	Angle of Departure		degrees	18.7°, 20.1°*2	18.7°, 20.1°*2	18.7°, 20.1°*2	18.7°, 20.1°*2
	Curb Weight	Front	kg (lb)	800 - 835 (1764 - 1841)	800 - 835 (1764 - 1841)	770 - 800 (1698 - 1764)	770 - 800 (1698 - 1764)
		Rear	kg (lb)	565 - 585 (1246 - 1290)	565 - 585 (1246 - 1290)	565 - 580 (1246 - 1279)	565 - 580 (1246 - 1279)
		Total	kg (lb)	1365 - 1420 (3010 - 3131)	1365 - 1420 (3010 - 3131)	1335 - 1380 (2944 - 3043)	1335 - 1380 (2944 - 3043)
	Gross Vehicle Weight	Front	kg (lb)	915 (2017)	915 (2017)	915 (2017)	915 (2017)
		Rear	kg (lb)	980 (2161)	980 (2161)	980 (2161)	980 (2161)
		Total	kg (lb)	1895 (4178)	1895 (4178)	1895 (4178)	1895 (4178)
	Fuel Tank Capacity		ℓ (Imp.gal.)	60 (15.9, 13.2)	60 (15.9, 13.2)	60 (15.9, 13.2)	60 (15.9, 13.2)
	Luggage Compartment Capacity		m³ (cu.ft.)	0.510 (18.0)	0.510 (18.0)	0.510 (18.0)	0.510 (18.0)
Performance	Max. Speed		km/h (mph)	205 (127)	205 (127)	210 (131)	210 (131)
	Max. Cruising Speed		km/h (mph)	—	—	—	—
	Acceleration	0 to 100 km/h	sec.	11.1	11.1	9.4	9.4
		0 to 400 m	sec.	17.6	17.6	16.6	16.6
	Max. Permissible Speed	1st Gear	km/h (mph)	63 (39)	63 (39)	56 (34)	56 (34)
		2nd Gear	km/h (mph)	114 (71)	114 (71)	96 (59)	96 (59)
		3rd Gear	km/h (mph)	177 (110)	177 (110)	149 (92)	149 (92)
		4th Gear	km/h (mph)	—	—	193 (119)	193 (119)
	Min. Turning Radius	Tire	m (ft.)	5.6 (18.4)	5.6 (18.4)	5.6 (18.4)	5.6 (18.4)
		Body	m (ft.)	5.995 (19.7)	5.995 (19.7)	5.995 (19.7)	5.995 (19.7)
Engine	Engine Type			1AZ-FSE	1AZ-FSE	1AZ-FSE	1AZ-FSE
	Valve Mechanism			16-Valve, DOHC	16-Valve, DOHC	16-Valve, DOHC	16-Valve, DOHC
	Bore x Stroke		mm (in.)	86.0 x 86.0 (3.39 x 3.39)	86.0 x 86.0 (3.39 x 3.39)	86.0 x 86.0 (3.39 x 3.39)	86.0 x 86.0 (3.39 x 3.39)
	Displacement		cm³ (cu.in.)	1998 (121.9)	1998 (121.9)	1998 (121.9)	1998 (121.9)
	Compression Ratio			11.0	11.0	11.0	11.0
	Fuel System			EFI	EFI	EFI	EFI
	Research Octane No. or Cetane No. (Diesel)			95 or higher	95 or higher	95 or higher	95 or higher
	Max. Output ( )		kW/rpm	108/5700	108/5700	108/5700	108/5700
	Max. Torque ( )		N·m/rpm	196/4000	196/4000	196/4000	196/4000
Engine Electrical	Battery Capacity (5HR)		Voltage & Amp. hr.	12-48	12-48	12-32, 48*3	12-32, 48*3
	Alternator Output		Watts	1200	1200	1200	1200
	Starter Output		kW	1.6	1.6	1.3, 1.6*3	1.3, 1.6*3
Chassis	Clutch Type			—	—	Dry, Single Plate Diaphragm	Dry, Single Plate Diaphragm
	Transaxle Type			U241E*4	U241E*4	E354	E354
	Transmission Gear Ratio	In First		3.943	3.943	3.538	3.538
		In Second		2.197	2.197	2.054	2.054
		In Third		1.413	1.413	1.333	1.333
		In Fourth		1.020	1.020	1.028	1.028
		In Fifth		—	—	0.820	0.820
		In Reverse		3.145	3.145	3.583	3.583
	Counter Gear Ratio			—	—	—	—
	Differential Gear Ratio (Final)			2.923	2.923	3.684	3.684
	Brake Type	Front		Ventilated Disc	Ventilated Disc	Ventilated Disc	Ventilated Disc
		Rear		Solid Disc	Solid Disc	Solid Disc	Solid Disc
	Parking Brake Type			Drum	Drum	Drum	Drum
	Brake Booster Type and Size		in.	Tandem 8"+ 9"	Tandem 8"+ 9"	Tandem 8"+ 9"	Tandem 8"+ 9"
	Proportioning Valve Type			—	—	—	—
	Suspension Type	Front		MacPherson Strut	MacPherson Strut	MacPherson Strut	MacPherson Strut
		Rear		Double Wishbone	Double Wishbone	Double Wishbone	Double Wishbone
	Stabilizer Bar	Front		Standard	Standard	Standard	Standard
		Rear		Standard	Standard	Standard	Standard
	Steering Gear Type			Rack and Pinion	Rack and Pinion	Rack and Pinion	Rack and Pinion
	Steering Gear Ratio (Overall)			16.1	16.1	16.1	16.1
	Power Steering Type			Integral Type	Integral Type	Integral Type	Integral Type

*1: With Sun Roof
*2: Rough Road Pack
*3: Option
*4: Snow Mord Type

EUROPE					
5-Door Liftback					
MID ELEGANT		ENTRY		MID TECHNICAL	
AZT250R-ALPGHW	AZT250L-ALPGHW	CDT250R-ALMNYW	CDT250L-ALMNYW	CDT250R-ALMEYW	CDT250L-ALMEYW
4630 (182.3)	4630 (182.3)	4630 (182.3)	4630 (182.3)	4630 (182.3)	4630 (182.3)
1760 (69.3)	1760 (69.3)	1760 (69.3)	1760 (69.3)	1760 (69.3)	1760 (69.3)
1480 (58.3)	1480 (58.3)	1480 (58.3)	1480 (58.3)	1480 (58.3)	1480 (58.3)
2700 (106.3)	2700 (106.3)	2700 (106.3)	2700 (106.3)	2700 (106.3)	2700 (106.3)
1506 (59.3)	1506 (59.3)	1506 (59.3)	1506 (59.3)	1506 (59.3)	1506 (59.3)
1510 (59.4)	1510 (59.4)	1510 (59.4)	1510 (59.4)	1510 (59.4)	1510 (59.4)
2090 (82.3)	2090 (82.3)	2090 (82.3)	2090 (82.3)	2090 (82.3)	2090 (82.3)
1485 (58.5)	1485 (58.5)	1485 (58.5)	1485 (58.5)	1485 (58.5)	1485 (58.5)
1210 (47.6), 1160 (45.7)*1	1210 (47.6), 1160 (45.7)*1	1210 (47.6), 1160 (45.7)*1	1210 (47.6), 1160 (45.7)*1	1210 (47.6), 1160 (45.7)*1	1210 (47.6), 1160 (45.7)*1
910 (35.8)	910 (35.8)	910 (35.8)	910 (35.8)	910 (35.8)	910 (35.8)
1025 (40.4)	1025 (40.4)	1025 (40.4)	1025 (40.4)	1025 (40.4)	1025 (40.4)
135 (5.3), 155 (6.1)*2	135 (5.3), 155 (6.1)*2	135 (5.3), 155 (6.1)*2	135 (5.3), 155 (6.1)*2	135 (5.3), 155 (6.1)*2	135 (5.3), 155 (6.1)*2
13.1°, 14.5°*2	13.1°, 14.5°*2	13.1°, 14.5°*2	13.1°, 14.5°*2	13.1°, 14.5°*2	13.1°, 14.5°*2
18.7°, 20.1°*2	18.7°, 20.1°*2	18.7°, 20.1°*2	18.7°, 20.1°*2	18.7°, 20.1°*2	18.7°, 20.1°*2
800 - 835 (1764 - 1841)	800 - 835 (1764 - 1841)	845 - 895 (1863 - 1973)	845 - 895 (1863 - 1973)	845 - 895 (1863 - 1973)	845 - 895 (1863 - 1973)
565 - 585 (1246 - 1290)	565 - 585 (1246 - 1290)	555 - 565 (1224 - 1246)	555 - 565 (1224 - 1246)	555 - 570 (1224 - 1257)	555 - 570 (1224 - 1257)
1365 - 1420 (3010 - 3131)	1365 - 1420 (3010 - 3131)	1400 - 1460 (3087 - 3219)	1400 - 1460 (3087 - 3219)	1400 - 1465 (3087 - 3230)	1400 - 1465 (3087 - 3230)
915 (2017)	915 (2017)	985 (2172)	985 (2172)	985 (2172)	985 (2172)
980 (2161)	980 (2161)	985 (2172)	985 (2172)	985 (2172)	985 (2172)
1895 (4178)	1895 (4178)	1970 (4344)	1970 (4344)	1970 (4344)	1970 (4344)
60 (15.9, 13.2)	60 (15.9, 13.2)	60 (15.9, 13.2)	60 (15.9, 13.2)	60 (15.9, 13.2)	60 (15.9, 13.2)
0.510 (18.0)	0.510 (18.0)	0.510 (18.0)	0.510 (18.0)	0.510 (18.0)	0.510 (18.0)
195 (121)	205 (127)	195 (121)	195 (121)	195 (121)	195 (121)
—	—	—	—	—	—
11.1	11.1	11.2	11.2	11.2	11.2
17.6	17.6	17.7	17.7	17.7	17.7
63 (39)	63 (39)	45 (27)	45 (27)	45 (27)	45 (27)
114 (71)	114 (71)	84 (52)	84 (52)	84 (52)	84 (52)
177 (110)	177 (110)	128 (79)	128 (79)	128 (79)	128 (79)
—	—	176 (109)	176 (109)	176 (109)	176 (109)
5.6 (18.4)	5.6 (18.4)	5.6 (18.4)	5.6 (18.4)	5.6 (18.4)	5.6 (18.4)
5.995 (19.7)	5.995 (19.7)	5.995 (19.7)	5.995 (19.7)	5.995 (19.7)	5.995 (19.7)
1AZ-FSE	1AZ-FSE	1CD-FTV	1CD-FTV	1CD-FTV	1CD-FTV
16-Valve, DOHC	16-Valve, DOHC	16-Valve, DOHC	16-Valve, DOHC	16-Valve, DOHC	16-Valve, DOHC
86.0 x 86.0 (3.39 x 3.39)	86.0 x 86.0 (3.39 x 3.39)	82.2 x 94.0 (3.24 x 3.70)	82.2 x 94.0 (3.24 x 3.70)	82.2 x 94.0 (3.24 x 3.70)	82.2 x 94.0 (3.24 x 3.70)
1998 (121.9)	1998 (121.9)	1995 (121.7)	1995 (121.7)	1995 (121.7)	1995 (121.7)
11.0	11.0	17.8	17.8	17.8	17.8
EFI	EFI	Common-Rail Type	Common-Rail Type	Common-Rail Type	Common-Rail Type
95 or higher	95 or higher	48 or higher	48 or higher	48 or higher	48 or higher
108/5700	108/5700	85/3600	85/3600	85/3600	85/3600
196/4000	196/4000	280/2000 - 2200	280/2000 - 2200	280/2000 - 2200	280/2000 - 2200
12-48	12-48	12-60	12-60	12-60	12-60
1200	1200	1200	1200	1200	1200
1.6	1.6	2.0	2.0	2.0	2.0
—	—	Dry, Single Plate Diaphragm	Dry, Single Plate Diaphragm	Dry, Single Plate Diaphragm	Dry, Single Plate Diaphragm
U241E*4	U241E*4	E357	E357	E357	E357
3.943	3.943	3.538	3.538	3.538	3.538
2.197	2.197	1.913	1.913	1.913	1.913
1.413	1.413	1.258	1.258	1.258	1.258
1.020	1.020	0.918	0.918	0.918	0.918
—	—	0.690	0.690	0.690	0.690
3.145	3.145	3.583	3.583	3.583	3.583
—	—	—	—	—	—
2.923	2.923	3.684	3.684	3.684	3.684
Ventilated Disc	Ventilated Disc	Ventilated Disc	Ventilated Disc	Ventilated Disc	Ventilated Disc
Solid Disc	Solid Disc	Solid Disc	Solid Disc	Solid Disc	Solid Disc
Drum	Drum	Drum	Drum	Drum	Drum
Tandem 8"+ 9"	Tandem 8"+ 9"	Tandem 8"+ 9"	Tandem 8"+ 9"	Tandem 8"+ 9"	Tandem 8"+ 9"
—	—	—	—	—	—
MacPherson Strut	MacPherson Strut	MacPherson Strut	MacPherson Strut	MacPherson Strut	MacPherson Strut
Double Wishbone	Double Wishbone	Double Wishbone	Double Wishbone	Double Wishbone	Double Wishbone
Standard	Standard	Standard	Standard	Standard	Standard
Standard	Standard	Standard	Standard	Standard	Standard
Rack and Pinion	Rack and Pinion	Rack and Pinion	Rack and Pinion	Rack and Pinion	Rack and Pinion
16.1	16.1	16.1	16.1	16.1	16.1
Integral Type	Integral Type	Integral Type	Integral Type	Integral Type	Integral Type

Item \ Area				EUROPE			
Body Type				5-Door Liftback		5-Door Wagon	
Vehicle Grade				MID ELEGANT		ENTRY	
Model Code				CDT250R-ALMGYW	CDT250L-ALMGYW	ZZT250L-AWMNKW	ZZT251R-AWMNKW
Major Dimensions & Vehicle Weights	Overall	Length	mm (in.)	4630 (182.3)	4630 (182.3)	4700 (185.0)	4700 (185.0)
		Width	mm (in.)	1760 (69.3)	1760 (69.3)	1760 (69.3)	1760 (69.3)
		Height	mm (in.)	1480 (58.3)	1480 (58.3)	1525 (60.0)	1525 (60.0)
	Wheel Base		mm (in.)	2700 (106.3)	2700 (106.3)	2700 (106.3)	2700 (106.3)
	Tread	Front	mm (in.)	1506 (59.3)	1506 (59.3)	1506 (59.3)	1506 (59.3)
		Rear	mm (in.)	1510 (59.4)	1510 (59.4)	1510 (59.4)	1510 (59.4)
	Room	Length	mm (in.)	2090 (82.3)	2090 (82.3)	2090 (82.3)	2090 (82.3)
		Width	mm (in.)	1485 (58.5)	1485 (58.5)	1485 (58.5)	1485 (58.5)
		Height	mm (in.)	1210 (47.6), 1160 (45.7)*1	1210 (47.6), 1160 (45.7)*1	1210 (47.6), 1160 (45.7)*1	1210 (47.6), 1160 (45.7)*1
	Overhang	Front	mm (in.)	910 (35.8)	910 (35.8)	910 (35.8)	910 (35.8)
		Rear	mm (in.)	1025 (40.4)	1025 (40.4)	1095 (43.1)	1095 (43.1)
	Min. Running Ground Clearance		mm (in.)	135 (5.3), 155 (6.1)*2	135 (5.3), 155 (6.1)*2	135 (5.3), 155 (6.1)*2	135 (5.3), 155 (6.1)*2
	Angle of Approach		degrees	13.1°, 14.5°*2	13.1°, 14.5°*2	13.1°, 14.5°*2	13.1°, 14.5°*2
	Angle of Departure		degrees	18.7°, 20.1°*2	18.7°, 20.1°*2	18°, 19.2°*2	18°, 19.2°*2
	Curb Weight	Front	kg (lb)	845 - 895 (1863 - 1973)	845 - 895 (1863 - 1973)	715 - 750 (1576 - 1653)	715 - 750 (1576 - 1653)
		Rear	kg (lb)	555 - 570 (1224 - 1257)	555 - 570 (1224 - 1257)	580 - 590 (1279 - 1301)	580 - 595 (1279 - 1312)
		Total	kg (lb)	1400 - 1465 (3087 - 3230)	1400 - 1465 (3087 - 3230)	1295 - 1340 (2855 - 2954)	1295 - 1345 (2855 - 2965)
	Gross Vehicle Weight	Front	kg (lb)	985 (2172)	985 (2172)	840 (1852)	840 (1852)
		Rear	kg (lb)	985 (2172)	985 (2172)	980 (2161)	980 (2161)
		Total	kg (lb)	1970 (4344)	1970 (4344)	1820 (4013)	1820 (4013)
	Fuel Tank Capacity		ℓ (Imp.gal.)	60 (15.9, 13.2)	60 (15.9, 13.2)	60 (15.9, 13.2)	60 (15.9, 13.2)
	Luggage Compartment Capacity		m³ (cu.ft.)	0.510 (18.0)	0.510 (18.0)	0.520 (18.4)	0.520 (18.4)
Performance	Max. Speed		km/h (mph)	195 (121)	195 (121)	195 (121)	200 (125)
	Max. Cruising Speed		km/h (mph)	—	—	—	—
	Acceleration	0 to 100 km/h	sec.	11.2	11.2	12.2	10.5
		0 to 400 m	sec.	17.7	17.7	18.2	17.2
	Max. Permissible Speed	1st Gear	km/h (mph)	45 (27)	45 (27)	47 (29)	51 (31)
		2nd Gear	km/h (mph)	84 (52)	84 (52)	87 (54)	95 (59)
		3rd Gear	km/h (mph)	128 (79)	128 (79)	127 (78)	139 (86)
		4th Gear	km/h (mph)	176 (109)	176 (109)	172 (106)	176 (109)
	Min. Turning Radius	Tire	m (ft.)	5.6 (18.4)	5.6 (18.4)	5.4 (17.7)	5.4 (17.7)
		Body	m (ft.)	5.995 (19.7)	5.995 (19.7)	5.75 (18.9)	5.75 (18.9)
Engine	Engine Type			1CD-FTV	1CD-FTV	3ZZ-FE	1ZZ-FE
	Valve Mechanism			16-Valve, DOHC	16-Valve, DOHC	16-Valve, DOHC	16-Valve, DOHC
	Bore x Stroke		mm (in.)	82.2 x 94.0 (3.24 x 3.70)	82.2 x 94.0 (3.24 x 3.70)	79.0 x 81.5 (3.11 x 3.21)	79.0 x 91.5 (3.11 x 3.60)
	Displacement		cm³ (cu.in.)	1995 (121.7)	1995 (121.7)	1598 (97.5)	1794 (109.5)
	Compression Ratio			17.8	17.8	10.5	10.0
	Fuel System			Common-Rail Type	Common-Rail Type	EFI	EFI
	Research Octane No. or Cetane No. (Diesel)			48 or higher	48 or higher	95 or higher	95 or higher
	Max. Output ( )		kW/rpm	85/3600	85/3600	81/6000	95/6000
	Max. Torque ( )		N·m/rpm	280/2000 - 2200	280/2000 - 2200	150/3800	170/4200
Engine Electrical	Battery Capacity (5HR)		Voltage & Amp. hr.	12-60	12-60	12-32, 48*3	12-32, 48*3
	Alternator Output		Watts	1200	1200	960, 1080*3	960, 1080*3
	Starter Output		kW	2.0	2.0	1.3	1.3
Chassis	Clutch Type			Dry, Single Plate Diaphragm	Dry, Single Plate Diaphragm	Dry, Single Plate Diaphragm	Dry, Single Plate Diaphragm
	Transaxle Type			E357	E357	C50	C250
	Transmission Gear Ratio	In First		3.538	3.538	3.545	3.545
		In Second		1.913	1.913	1.904	1.904
		In Third		1.258	1.258	1.310	1.310
		In Fourth		0.918	0.918	0.969	1.031
		In Fifth		0.690	0.690	0.815	0.815
		In Reverse		3.583	3.583	3.250	3.250
	Counter Gear Ratio			—	—	—	—
	Differential Gear Ratio (Final)			3.684	3.684	4.312	3.941
	Brake Type	Front		Ventilated Disc	Ventilated Disc	Ventilated Disc	Ventilated Disc
		Rear		Solid Disc	Solid Disc	Solid Disc	Solid Disc
	Parking Brake Type			Drum	Drum	Drum	Drum
	Brake Booster Type and Size		in.	Tandem 8"+ 9"	Tandem 8"+ 9"	Tandem 8"+ 9"	Tandem 8"+ 9"
	Proportioning Valve Type			—	—	—	—
	Suspension Type	Front		MacPherson Strut	MacPherson Strut	MacPherson Strut	MacPherson Strut
		Rear		Double Wishbone	Double Wishbone	Double Wishbone	Double Wishbone
	Stabilizer Bar	Front		Standard	Standard	Standard	Standard
		Rear		Standard	Standard	Standard	Standard
	Steering Gear Type			Rack and Pinion	Rack and Pinion	Rack and Pinion	Rack and Pinion
	Steering Gear Ratio (Overall)			16.1	16.1	17.5	17.5
	Power Steering Type			Integral Type	Integral Type	EPS	EPS

*1: With Sun Roof
*2: Rough Road Pack
*3: Option

EUROPE					
5-Door Wagon					
ENTRY		MID TECHNICAL			MID ELEGANT
ZZT251L-AWMNKW	ZZT251L-AWPNKW	ZZT251R-AWMEKW	ZZT251L-AWMEKW	ZZT251L-AWPEKW	ZZT251R-AWMGKW
4700 (185.0)	4700 (185.0)	4700 (185.0)	4700 (185.0)	4700 (185.0)	4700 (185.0)
1760 (69.3)	1760 (69.3)	1760 (69.3)	1760 (69.3)	1760 (69.3)	1760 (69.3)
1525 (60.0)	1525 (60.0)	1525 (60.0)	1525 (60.0)	1525 (60.0)	1525 (60.0)
2700 (106.3)	2700 (106.3)	2700 (106.3)	2700 (106.3)	2700 (106.3)	2700 (106.3)
1506 (59.3)	1506 (59.3)	1506 (59.3)	1506 (59.3)	1506 (59.3)	1506 (59.3)
1510 (59.4)	1510 (59.4)	1510 (59.4)	1510 (59.4)	1510 (59.4)	1510 (59.4)
2090 (82.3)	2090 (82.3)	2090 (82.3)	2090 (82.3)	2090 (82.3)	2090 (82.3)
1485 (58.5)	1485 (58.5)	1485 (58.5)	1485 (58.5)	1485 (58.5)	1485 (58.5)
1210 (47.6), 1160 (45.7)*1	1210 (47.6), 1160 (45.7)*1	1210 (47.6), 1160 (45.7)*1	1210 (47.6), 1160 (45.7)*1	1210 (47.6), 1160 (45.7)*1	1210 (47.6), 1160 (45.7)*1
910 (35.8)	910 (35.8)	910 (35.8)	910 (35.8)	910 (35.8)	910 (35.8)
1095 (43.1)	1095 (43.1)	1095 (43.1)	1095 (43.1)	1095 (43.1)	1095 (43.1)
135 (5.3), 155 (6.1)*2	135 (5.3), 155 (6.1)*2	135 (5.3), 155 (6.1)*2	135 (5.3), 155 (6.1)*2	135 (5.3), 155 (6.1)*2	135 (5.3), 155 (6.1)*2
13.1°, 14.5°*2	13.1°, 14.5°*2	13.1°, 14.5°*2	13.1°, 14.5°*2	13.1°, 14.5°*2	13.1°, 14.5°*2
18°, 19.2°*2	18°, 19.2°*2	18°, 19.2°*2	18°, 19.2°*2	18°, 19.2°*2	18°, 19.2°*2
715 - 750 (1576 - 1653)	745 - 775 (1642 - 1709)	715 - 750 (1576 - 1653)	715 - 750 (1576 - 1653)	745 - 775 (1642 - 1709)	715 - 750 (1576 - 1653)
580 - 595 (1279 - 1312)	580 - 600 (1279 - 1323)	580 - 595 (1279 - 1312)	580 - 595 (1279 - 1312)	580 - 600 (1279 - 1323)	580 - 595 (1279 - 1312)
1295 - 1345 (2855 - 2965)	1325 - 1375 (2921 - 3032)	1295 - 1345 (2855 - 2965)	1295 - 1345 (2855 - 2965)	1325 - 1375 (2921 - 3032)	1295 - 1345 (2855 - 2965)
840 (1852)	840 (1852)	840 (1852)	840 (1852)	840 (1852)	840 (1852)
980 (2161)	980 (2161)	980 (2161)	980 (2161)	980 (2161)	980 (2161)
1820 (4013)	1820 (4013)	1820 (4013)	1820 (4013)	1820 (4013)	1820 (4013)
60 (15.9, 13.2)	60 (15.9, 13.2)	60 (15.9, 13.2)	60 (15.9, 13.2)	60 (15.9, 13.2)	60 (15.9, 13.2)
0.520 (18.4)	0.520 (18.4)	0.520 (18.4)	0.520 (18.4)	0.520 (18.4)	0.520 (18.4)
200 (125)	195 (121)	200 (125)	200 (125)	195 (121)	200 (125)
—	—	—	—	—	—
10.5	11.8	10.5	10.5	11.8	10.5
17.2	18.0	17.2	17.2	18.0	17.2
51 (31)	59 (36)	51 (31)	51 (31)	59 (36)	51 (31)
95 (59)	109 (67)	95 (59)	95 (59)	109 (67)	95 (59)
139 (86)	169 (105)	139 (86)	139 (86)	169 (105)	139 (86)
176 (109)	—	176 (109)	176 (109)	—	176 (109)
5.4 (17.7)	5.4 (17.7)	5.4 (17.7)	5.4 (17.7)	5.4 (17.7)	5.4 (17.7)
5.75 (18.9)	5.75 (18.9)	5.75 (18.9)	5.75 (18.9)	5.75 (18.9)	5.75 (18.9)
1ZZ-FE	1ZZ-FE	1ZZ-FE	1ZZ-FE	1ZZ-FE	1ZZ-FE
16-Valve, DOHC	16-Valve, DOHC	16-Valve, DOHC	16-Valve, DOHC	16-Valve, DOHC	16-Valve, DOHC
79.0 x 91.5 (3.11 x 3.60)	79.0 x 91.5 (3.11 x 3.60)	79.0 x 91.5 (3.11 x 3.60)	79.0 x 91.5 (3.11 x 3.60)	79.0 x 91.5 (3.11 x 3.60)	79.0 x 91.5 (3.11 x 3.60)
1794 (109.5)	1794 (109.5)	1794 (109.5)	1794 (109.5)	1794 (109.5)	1794 (109.5)
10.0	10.0	10.0	10.0	10.0	10.0
EFI	EFI	EFI	EFI	EFI	EFI
95 or higher	95 or higher	95 or higher	95 or higher	95 or higher	95 or higher
95 / 6000	95 / 6000	95 / 6000	95 / 6000	95 / 6000	95 / 6000
170 / 4200	170 / 4200	170 / 4200	170 / 4200	170 / 4200	170 / 4200
12-32, 48*3	12-32, 48*3	12-32, 48*3	12-32, 48*3	12-32, 48*3	12-32, 48*3
960, 1080*3	960, 1080*3	960, 1080*3	960, 1080*3	960, 1080*3	960, 1080*3
1.3	1.3	1.3	1.3	1.3	1.3
Dry, Single Plate Diaphragm	—	Dry, Single Plate Diaphragm	Dry, Single Plate Diaphragm	—	Dry, Single Plate Diaphragm
C250	U341E	C250	C250	U341E	C250
3.545	2.847	3.545	3.545	2.847	3.545
1.904	1.552	1.904	1.904	1.552	1.904
1.310	1.000	1.310	1.310	1.000	1.310
1.031	0.700	1.031	1.031	0.700	1.031
0.815	—	0.815	0.815	—	0.815
3.250	2.343	3.250	3.250	2.343	3.250
—	—	—	—	—	—
3.941	4.237	3.941	3.941	4.237	3.941
Ventilated Disc	Ventilated Disc	Ventilated Disc	Ventilated Disc	Ventilated Disc	Ventilated Disc
Solid Disc	Solid Disc	Solid Disc	Solid Disc	Solid Disc	Solid Disc
Drum	Drum	Drum	Drum	Drum	Drum
Tandem 8"+ 9"	Tandem 8"+ 9"	Tandem 8"+ 9"	Tandem 8"+ 9"	Tandem 8"+ 9"	Tandem 8"+ 9"
—	—	—	—	—	—
MacPherson Strut	MacPherson Strut	MacPherson Strut	MacPherson Strut	MacPherson Strut	MacPherson Strut
Double Wishbone	Double Wishbone	Double Wishbone	Double Wishbone	Double Wishbone	Double Wishbone
Standard	Standard	Standard	Standard	Standard	Standard
Standard	Standard	Standard	Standard	Standard	Standard
Rack and Pinion	Rack and Pinion	Rack and Pinion	Rack and Pinion	Rack and Pinion	Rack and Pinion
17.5	17.5	17.5	17.5	17.5	17.5
EPS	EPS	EPS	EPS	EPS	EPS

Item \ Area				EUROPE			
Body Type				5-Door Wagon			
Vehicle Grade				MID ELEGANT		MID TECHNICAL	MID ELEGANT
Model Code				ZZT251L-AWMGKW	ZZT251L-AWPGKW	AZT250L-AWPEKW	AZT250L-AWPGKW
Major Dimensions & Vehicle Weights	Overall	Length	mm (in.)	4700 (185.0)	4700 (185.0)	4700 (185.0)	4700 (185.0)
		Width	mm (in.)	1760 (69.3)	1760 (69.3)	1760 (69.3)	1760 (69.3)
		Height	mm (in.)	1525 (60.0)	1525 (60.0)	1525 (60.0)	1525 (60.0)
	Wheel Base		mm (in.)	2700 (106.3)	2700 (106.3)	2700 (106.3)	2700 (106.3)
	Tread	Front	mm (in.)	1506 (59.3)	1506 (59.3)	1506 (59.3)	1506 (59.3)
		Rear	mm (in.)	1510 (59.4)	1510 (59.4)	1510 (59.4)	1510 (59.4)
	Room	Length	mm (in.)	2090 (82.3)	2090 (82.3)	2090 (82.3)	2090 (82.3)
		Width	mm (in.)	1485 (58.5)	1485 (58.5)	1485 (58.5)	1485 (58.5)
		Height	mm (in.)	1210 (47.6), 1160 (45.7)*1	1210 (47.6), 1160 (45.7)*1	1210 (47.6), 1160 (45.7)*1	1210 (47.6), 1160 (45.7)*1
	Overhang	Front	mm (in.)	910 (35.8)	910 (35.8)	910 (35.8)	910 (35.8)
		Rear	mm (in.)	1095 (43.1)	1095 (43.1)	1095 (43.1)	1095 (43.1)
	Min. Running Ground Clearance		mm (in.)	135 (5.3), 155 (6.1)*2	135 (5.3), 155 (6.1)*2	135 (5.3), 155 (6.1)*2	135 (5.3), 155 (6.1)*2
	Angle of Approach		degrees	13.1°, 14.5°*2	13.1°, 14.5°*2	13.1°, 14.5°*2	13.1°, 14.5°*2
	Angle of Departure		degrees	18°, 19.2°*2	18°, 19.2°*2	18°, 19.2°*2	18°, 19.2°*2
	Curb Weight	Front	kg (lb)	715 - 750 (1576 - 1653)	745 - 775 (1642 - 1709)	795 - 830 (1753 - 1830)	795 - 830 (1753 - 1830)
		Rear	kg (lb)	580 - 595 (1279 - 1312)	580 - 600 (1279 - 1323)	570 - 590 (1257 - 1301)	570 - 590 (1257 - 1301)
		Total	kg (lb)	1295 - 1345 (2855 - 2965)	1325 - 1375 (2921 - 3032)	1365 - 1420 (3010 - 3131)	1365 - 1420 (3010 - 3131)
	Gross Vehicle Weight	Front	kg (lb)	840 (1852)	840 (1852)	915 (2017)	915 (2017)
		Rear	kg (lb)	980 (2161)	980 (2161)	975 (2150)	975 (2150)
		Total	kg (lb)	1820 (4013)	1820 (4013)	1890 (4167)	1890 (4167)
	Fuel Tank Capacity		ℓ (Imp.gal.)	60 (15.9, 13.2)	60 (15.9, 13.2)	60 (15.9, 13.2)	60 (15.9, 13.2)
	Luggage Compartment Capacity		m³ (cu.ft.)	0.520 (18.4)	0.520 (18.4)	0.520 (18.4)	0.520 (18.4)
Performance	Max. Speed		km/h (mph)	200 (125)	195 (121)	185 (115)	185 (115)
	Max. Cruising Speed		km/h (mph)	—	—	—	—
	Acceleration	0 to 100 km/h	sec.	10.5	11.8	11.3	11.3
		0 to 400 m	sec.	17.2	18.0	17.7	17.7
	Max. Permissible Speed	1st Gear	km/h (mph)	51 (31)	59 (36)	62 (38)	62 (38)
		2nd Gear	km/h (mph)	95 (59)	109 (67)	111 (68)	111 (68)
		3rd Gear	km/h (mph)	139 (86)	169 (105)	174 (108)	174 (108)
		4th Gear	km/h (mph)	176 (109)	—	—	—
	Min. Turning Radius	Tire	m (ft.)	5.4 (17.7)	5.4 (17.7)	5.6 (18.4)	5.6 (18.4)
		Body	m (ft.)	5.75 (18.9)	5.75 (18.9)	5.995 (19.7)	5.995 (19.7)
Engine	Engine Type			1ZZ-FE	1ZZ-FE	1AZ-FE	1AZ-FE
	Valve Mechanism			16-Valve, DOHC	16-Valve, DOHC	16-Valve, DOHC	16-Valve, DOHC
	Bore x Stroke		mm (in.)	79.0 x 91.5 (3.11 x 3.60)	79.0 x 91.5 (3.11 x 3.60)	86.0 x 86.0 (3.39 x 3.39)	86.0 x 86.0 (3.39 x 3.39)
	Displacement		cm³ (cu.in.)	1794 (109.5)	1794 (109.5)	1998 (121.9)	1998 (121.9)
	Compression Ratio			10.0	10.0	9.8	9.8
	Fuel System			EFI	EFI	EFI	EFI
	Research Octane No. or Cetane No. (Diesel)			95 or higher	95 or higher	95 or higher	95 or higher
	Max. Output ( )		kW/rpm	95/6000	95/6000	108/6000	108/6000
	Max. Torque ( )		N·m/rpm	170/4200	170/4200	192/4000	192/4000
Engine Electrical	Battery Capacity (5HR)		Voltage & Amp. hr.	12-32, 48*3	12-32, 48*3	12-32, 48*3	12-32, 48*3
	Alternator Output		Watts	960, 1080*3	960, 1080*3	1200	1200
	Starter Output		kW	1.3	1.3	1.3	1.3
Chassis	Clutch Type			Dry, Single Plate Diaphragm	—	—	—
	Transaxle Type			C250	U341E	U241E	U241E
	Transmission Gear Ratio	In First		3.545	2.847	3.943	3.943
		In Second		1.904	1.552	2.197	2.197
		In Third		1.310	1.000	1.413	1.413
		In Fourth		1.031	0.700	1.020	1.020
		In Fifth		0.815	—	—	—
		In Reverse		3.250	2.343	3.145	3.145
	Counter Gear Ratio			—	—	—	—
	Differential Gear Ratio (Final)			3.941	4.237	2.923	2.923
	Brake Type	Front		Ventilated Disc	Ventilated Disc	Ventilated Disc	Ventilated Disc
		Rear		Solid Disc	Solid Disc	Solid Disc	Solid Disc
	Parking Brake Type			Drum	Drum	Drum	Drum
	Brake Booster Type and Size		in.	Tandem 8"+ 9"	Tandem 8"+ 9"	Tandem 8"+ 9"	Tandem 8"+ 9"
	Proportioning Valve Type			—	—	—	—
	Suspension Type	Front		MacPherson Strut	MacPherson Strut	MacPherson Strut	MacPherson Strut
		Rear		Double Wishbone	Double Wishbone	Double Wishbone	Double Wishbone
	Stabilizer Bar	Front		Standard	Standard	Standard	Standard
		Rear		Standard	Standard	Standard	Standard
	Steering Gear Type			Rack and Pinion	Rack and Pinion	Rack and Pinion	Rack and Pinion
	Steering Gear Ratio (Overall)			17.5	17.5	16.1	16.1
	Power Steering Type			EPS	EPS	Integral Type	Integral Type

*1: With Sun Roof
*2: Rough Road Pack
*3: Option
*4: Snow Mord Type

EUROPE					
5-Door Wagon					
MID TECHNICAL				MID ELEGANT	
AZT250R-AWMEHW	AZT250L-AWMEHW	AZT250R-AWPEHW	AZT250L-AWPEHW	AZT250R-AWMGHW	AZT250L-AWMGHW
4700 (185.0)	4700 (185.0)	4700 (185.0)	4700 (185.0)	4700 (185.0)	4700 (185.0)
1760 (69.3)	1760 (69.3)	1760 (69.3)	1760 (69.3)	1760 (69.3)	1760 (69.3)
1525 (60.0)	1525 (60.0)	1525 (60.0)	1525 (60.0)	1525 (60.0)	1525 (60.0)
2700 (106.3)	2700 (106.3)	2700 (106.3)	2700 (106.3)	2700 (106.3)	2700 (106.3)
1506 (59.3)	1506 (59.3)	1506 (59.3)	1506 (59.3)	1506 (59.3)	1506 (59.3)
1510 (59.4)	1510 (59.4)	1510 (59.4)	1510 (59.4)	1510 (59.4)	1510 (59.4)
2090 (82.3)	2090 (82.3)	2090 (82.3)	2090 (82.3)	2090 (82.3)	2090 (82.3)
1485 (58.5)	1485 (58.5)	1485 (58.5)	1485 (58.5)	1485 (58.5)	1485 (58.5)
1210 (47.6), 1160 (45.7)*1	1210 (47.6), 1160 (45.7)*1	1210 (47.6), 1160 (45.7)*1	1210 (47.6), 1160 (45.7)*1	1210 (47.6), 1160 (45.7)*1	1210 (47.6), 1160 (45.7)*1
910 (35.8)	910 (35.8)	910 (35.8)	910 (35.8)	910 (35.8)	910 (35.8)
1095 (43.1)	1095 (43.1)	1095 (43.1)	1095 (43.1)	1095 (43.1)	1095 (43.1)
135 (5.3), 155 (6.1)*2	135 (5.3), 155 (6.1)*2	135 (5.3), 155 (6.1)*2	135 (5.3), 155 (6.1)*2	135 (5.3), 155 (6.1)*2	135 (5.3), 155 (6.1)*2
13.1°, 14.5°*2	13.1°, 14.5°*2	13.1°, 14.5°*2	13.1°, 14.5°*2	13.1°, 14.5°*2	13.1°, 14.5°*2
18°, 19.2°*2	18°, 19.2°*2	18°, 19.2°*2	18°, 19.2°*2	18°, 19.2°*2	18°, 19.2°*2
770 - 800 (1698 - 1764)	770 - 800 (1698 - 1764)	800 - 825 (1764 - 1819)	800 - 825 (1764 - 1819)	770 - 800 (1698 - 1764)	770 - 800 (1698 - 1764)
585 - 600 (1290 - 1323)	585 - 600 (1290 - 1323)	585 - 595 (1290 - 1312)	585 - 595 (1290 - 1312)	585 - 600 (1290 - 1323)	585 - 600 (1290 - 1323)
1355 - 1400 (2988 - 3087)	1355 - 1400 (2988 - 3087)	1385 - 1420 (3054 - 3131)	1385 - 1420 (3054 - 3131)	1355 - 1400 (2988 - 3087)	1355 - 1400 (2988 - 3087)
915 (2017)	915 (2017)	915 (2017)	915 (2017)	915 (2017)	915 (2017)
980 (2161)	980 (2161)	980 (2161)	980 (2161)	980 (2161)	980 (2161)
1895 (4178)	1895 (4178)	1895 (4178)	1895 (4178)	1895 (4178)	1895 (4178)
60 (15.9, 13.2)	60 (15.9, 13.2)	60 (15.9, 13.2)	60 (15.9, 13.2)	60 (15.9, 13.2)	60 (15.9, 13.2)
0.520 (18.4)	0.520 (18.4)	0.520 (18.4)	0.520 (18.4)	0.520 (18.4)	0.520 (18.4)
200 (124)	200 (124)	205 (128)	205 (128)	210 (131)	210 (131)
—	—	—	—	—	—
9.6	9.6	11.3	11.3	9.6	9.6
16.7	16.7	17.7	17.7	16.7	16.7
56 (34)	56 (34)	63 (39)	63 (39)	56 (34)	56 (34)
96 (59)	96 (59)	114 (71)	114 (71)	96 (59)	96 (59)
149 (92)	149 (92)	177 (110)	177 (110)	149 (92)	149 (92)
193 (119)	193 (119)	—	—	193 (119)	193 (119)
5.6 (18.4)	5.6 (18.4)	5.6 (18.4)	5.6 (18.4)	5.6 (18.4)	5.6 (18.4)
5.995 (19.7)	5.995 (19.7)	5.995 (19.7)	5.995 (19.7)	5.995 (19.7)	5.995 (19.7)
1AZ-FSE	1AZ-FSE	1AZ-FSE	1AZ-FSE	1AZ-FSE	1AZ-FSE
16-Valve, DOHC	16-Valve, DOHC	16-Valve, DOHC	16-Valve, DOHC	16-Valve, DOHC	16-Valve, DOHC
86.0 x 86.0 (3.39 x 3.39)	86.0 x 86.0 (3.39 x 3.39)	86.0 x 86.0 (3.39 x 3.39)	86.0 x 86.0 (3.39 x 3.39)	86.0 x 86.0 (3.39 x 3.39)	86.0 x 86.0 (3.39 x 3.39)
1998 (121.9)	1998 (121.9)	1998 (121.9)	1998 (121.9)	1998 (121.9)	1998 (121.9)
11.0	11.0	11.0	11.0	11.0	11.0
EFI	EFI	EFI	EFI	EFI	EFI
95 or higher	95 or higher	95 or higher	95 or higher	95 or higher	95 or higher
108 / 5700	108 / 5700	108 / 5700	108 / 5700	108 / 5700	108 / 5700
196 / 4000	196 / 4000	196 / 4000	196 / 4000	196 / 4000	196 / 4000
12-32, 48*3	12-32, 48*3	12-48	12-48	12-32, 48*3	12-32, 48*3
1200	1200	1200	1200	1200	1200
1.3, 1.6*3	1.3, 1.6*3	1.6	1.6	1.3, 1.6*3	1.3, 1.6*3
Dry, Single Plate Diaphragm	Dry, Single Plate Diaphragm	—	—	Dry, Single Plate Diaphragm	Dry, Single Plate Diaphragm
E354	E354	U241E*4	U241E*4	E354	E354
3.538	3.538	3.943	3.943	3.538	3.538
2.054	2.054	2.197	2.197	2.054	2.054
1.333	1.333	1.413	1.413	1.333	1.333
1.028	1.028	1.020	1.020	1.028	1.028
0.820	0.820	—	—	0.820	0.820
3.583	3.583	3.145	3.145	3.583	3.583
—	—	—	—	—	—
3.684	3.684	2.923	2.923	3.684	3.684
Ventilated Disc	Ventilated Disc	Ventilated Disc	Ventilated Disc	Ventilated Disc	Ventilated Disc
Solid Disc	Solid Disc	Solid Disc	Solid Disc	Solid Disc	Solid Disc
Drum	Drum	Drum	Drum	Drum	Drum
Tandem 8"+ 9"	Tandem 8"+ 9"	Tandem 8"+ 9"	Tandem 8"+ 9"	Tandem 8"+ 9"	Tandem 8"+ 9"
—	—	—	—	—	—
MacPherson Strut	MacPherson Strut	MacPherson Strut	MacPherson Strut	MacPherson Strut	MacPherson Strut
Double Wishbone	Double Wishbone	Double Wishbone	Double Wishbone	Double Wishbone	Double Wishbone
Standard	Standard	Standard	Standard	Standard	Standard
Standard	Standard	Standard	Standard	Standard	Standard
Rack and Pinion	Rack and Pinion	Rack and Pinion	Rack and Pinion	Rack and Pinion	Rack and Pinion
16.1	16.1	16.1	16.1	16.1	16.1
Integral Type	Integral Type	Integral Type	Integral Type	Integral Type	Integral Type

Item \ Area				EUROPE			
Body Type				5-Door Wagon			
Vehicle Grade				MID ELEGANT		ENTRY	
Model Code				AZT250R-AWPGHW	AZT250L-AWPGHW	CDT250R-AWMNYW	CDT250L-AWMNYW
Major Dimensions & Vehicle Weights	Overall	Length	mm (in.)	4700 (185.0)	4700 (185.0)	4700 (185.0)	4700 (185.0)
		Width	mm (in.)	1760 (69.3)	1760 (69.3)	1760 (69.3)	1760 (69.3)
		Height	mm (in.)	1525 (60.0)	1525 (60.0)	1525 (60.0)	1525 (60.0)
	Wheel Base		mm (in.)	2700 (106.3)	2700 (106.3)	2700 (106.3)	2700 (106.3)
	Tread	Front	mm (in.)	1506 (59.3)	1506 (59.3)	1506 (59.3)	1506 (59.3)
		Rear	mm (in.)	1510 (59.4)	1510 (59.4)	1510 (59.4)	1510 (59.4)
	Room	Length	mm (in.)	2090 (82.3)	2090 (82.3)	2090 (82.3)	2090 (82.3)
		Width	mm (in.)	1485 (58.5)	1485 (58.5)	1485 (58.5)	1485 (58.5)
		Height	mm (in.)	1210 (47.6), 1160 (45.7)*1	1210 (47.6), 1160 (45.7)*1	1210 (47.6), 1160 (45.7)*1	1210 (47.6), 1160 (45.7)*1
	Overhang	Front	mm (in.)	910 (35.8)	910 (35.8)	910 (35.8)	910 (35.8)
		Rear	mm (in.)	1095 (43.1)	1095 (43.1)	1095 (43.1)	1095 (43.1)
	Min. Running Ground Clearance		mm (in.)	135 (5.3), 155 (6.1)*2	135 (5.3), 155 (6.1)*2	135 (5.3), 155 (6.1)*2	135 (5.3), 155 (6.1)*2
	Angle of Approach		degrees	13.1°, 14.5°*2	13.1°, 14.5°*2	13.1°, 14.5°*2	13.1°, 14.5°*2
	Angle of Departure		degrees	18°, 19.2°*2	18°, 19.2°*2	18°, 19.2°*2	18°, 19.2°*2
	Curb Weight	Front	kg (lb)	800 - 825 (1764 - 1819)	800 - 825 (1764 - 1819)	850 - 900 (1874 - 1984)	850 - 900 (1874 - 1984)
		Rear	kg (lb)	585 - 595 (1290 - 1312)	585 - 595 (1290 - 1312)	580 - 590 (1279 - 1301)	580 - 590 (1279 - 1301)
		Total	kg (lb)	1385 - 1420 (3054 - 3131)	1385 - 1420 (3054 - 3131)	1430 - 1490 (3153 - 3285)	1430 - 1490 (3153 - 3285)
	Gross Vehicle Weight	Front	kg (lb)	915 (2017)	915 (2017)	985 (2172)	985 (2172)
		Rear	kg (lb)	980 (2161)	980 (2161)	985 (2172)	985 (2172)
		Total	kg (lb)	1895 (4178)	1895 (4178)	1970 (4344)	1970 (4344)
	Fuel Tank Capacity		ℓ (Imp.gal.)	60 (15.9, 13.2)	60 (15.9, 13.2)	60 (15.9, 13.2)	60 (15.9, 13.2)
	Luggage Compartment Capacity		m³ (cu.ft.)	0.520 (18.4)	0.520 (18.4)	0.520 (18.4)	0.520 (18.4)
Performance	Max. Speed		km/h (mph)	205 (128)	205 (128)	195 (122)	195 (122)
	Max. Cruising Speed		km/h (mph)	—	—	—	—
	Acceleration	0 to 100 km/h	sec.	11.3	11.3	11.4	11.4
		0 to 400 m	sec.	17.7	17.7	17.8	17.8
	Max. Permissible Speed	1st Gear	km/h (mph)	63 (39)	63 (39)	45 (27)	45 (27)
		2nd Gear	km/h (mph)	114 (71)	114 (71)	84 (52)	84 (52)
		3rd Gear	km/h (mph)	177 (110)	177 (110)	128 (79)	128 (79)
		4th Gear	km/h (mph)	—	—	176 (109)	176 (109)
	Min. Turning Radius	Tire	m (ft.)	5.6 (18.4)	5.6 (18.4)	5.6 (18.4)	5.6 (18.4)
		Body	m (ft.)	5.995 (19.7)	5.995 (19.7)	5.995 (19.7)	5.995 (19.7)
Engine	Engine Type			1AZ-FSE	1AZ-FSE	1CD-FTV	1CD-FTV
	Valve Mechanism			16-Valve, DOHC	16-Valve, DOHC	16-Valve, DOHC	16-Valve, DOHC
	Bore x Stroke		mm (in.)	86.0 x 86.0 (3.39 x 3.39)	86.0 x 86.0 (3.39 x 3.39)	82.2 x 94.0 (3.24 x 3.70)	82.2 x 94.0 (3.24 x 3.70)
	Displacement		cm³ (cu.in.)	1998 (121.9)	1998 (121.9)	1995 (121.7)	1995 (121.7)
	Compression Ratio			11.0	11.0	17.8	17.8
	Fuel System			EFI	EFI	Common-Rail Type	Common-Rail Type
	Research Octane No. or Cetane No. (Diesel)			95 or higher	95 or higher	48 or higher	48 or higher
	Max. Output ( )		kW/rpm	108/5700	108/5700	85/3600	85/3600
	Max. Torque ( )		N·m/rpm	196/4000	196/4000	280/2000 - 2200	280/2000 - 2200
Engine Electrical	Battery Capacity (5HR)		Voltage & Amp. hr.	12-48	12-48	12-60	12-60
	Alternator Output		Watts	1200	1200	1200	1200
	Starter Output		kW	1.6	1.6	2.0	2.0
Chassis	Clutch Type			—	—	Dry, Single Plate Diaphragm	Dry, Single Plate Diaphragm
	Transaxle Type			U241E*4	U241E*4	E357	E357
	Transmission Gear Ratio	In First		3.943	3.943	3.538	3.538
		In Second		2.197	2.197	1.913	1.913
		In Third		1.413	1.413	1.258	1.258
		In Fourth		1.020	1.020	0.918	0.918
		In Fifth		—	—	0.690	0.690
		In Reverse		3.145	3.145	3.583	3.583
	Counter Gear Ratio			—	—	—	—
	Differential Gear Ratio (Final)			2.923	2.923	3.684	3.684
	Brake Type	Front		Ventilated Disc	Ventilated Disc	Ventilated Disc	Ventilated Disc
		Rear		Solid Disc	Solid Disc	Solid Disc	Solid Disc
	Parking Brake Type			Drum	Drum	Drum	Drum
	Brake Booster Type and Size		in.	Tandem 8"+ 9"	Tandem 8"+ 9"	Tandem 8"+ 9"	Tandem 8"+ 9"
	Proportioning Valve Type			—	—	—	—
	Suspension Type	Front		MacPherson Strut	MacPherson Strut	MacPherson Strut	MacPherson Strut
		Rear		Double Wishbone	Double Wishbone	Double Wishbone	Double Wishbone
	Stabilizer Bar	Front		Standard	Standard	Standard	Standard
		Rear		Standard	Standard	Standard	Standard
	Steering Gear Type			Rack and Pinion	Rack and Pinion	Rack and Pinion	Rack and Pinion
	Steering Gear Ratio (Overall)			16.1	16.1	16.1	16.1
	Power Steering Type			Integral Type	Integral Type	Integral Type	Integral Type

*1: With Sun Roof
*2: Rough Road Pack
*3: Option
*4: Snow Mord Type

	EUROPE					
	5-Door Wagon		4-Door Sedan			
	MID TECHNICAL	MID ELEGANT	MID TECHNICAL		MID ELEGANT	
	CDT250L-AWMEYW	CDT250L-AWMGYW	CDT250L-AEMEXW	CDT250R-AEMEXW	CDT250L-AEMGXW	CDT250R-AEMGXW
5	4700 (185.0)	4700 (185.0)	4630 (182.3)	4630 (182.3)	4630 (182.3)	4630 (182.3)
	1760 (69.3)	1760 (69.3)	1760 (69.3)	1760 (69.3)	1760 (69.3)	1760 (69.3)
	1525 (60.0)	1525 (60.0)	1480 (58.3)	1480 (58.3)	1480 (58.3)	1480 (58.3)
	2700 (106.3)	2700 (106.3)	2700 (106.3)	2700 (106.3)	2700 (106.3)	2700 (106.3)
	1506 (59.3)	1506 (59.3)	1506 (59.3)	1506 (59.3)	1506 (59.3)	1506 (59.3)
10	1510 (59.4)	1510 (59.4)	1510 (59.4)	1510 (59.4)	1510 (59.4)	1510 (59.4)
	2090 (82.3)	2090 (82.3)	2090 (82.3)	2090 (82.3)	2090 (82.3)	2090 (82.3)
	1485 (58.5)	1485 (58.5)	1485 (58.5)	1485 (58.5)	1485 (58.5)	1485 (58.5)
	1210 (47.6), 1160 (45.7)*1	1210 (47.6), 1160 (45.7)*1	1210 (47.6), 1160 (45.7)*1	1210 (47.6), 1160 (45.7)*1	1210 (47.6), 1160 (45.7)*1	1210 (47.6), 1160 (45.7)*1
	910 (35.8)	910 (35.8)	910 (35.8)	910 (35.8)	910 (35.8)	910 (35.8)
15	1095 (43.1)	1095 (43.1)	1025 (40.4)	1025 (40.4)	1025 (40.4)	1025 (40.4)
	135 (5.3), 155 (6.1)*2	135 (5.3), 155 (6.1)*2	135 (5.3), 155 (6.1)*2	135 (5.3), 155 (6.1)*2	135 (5.3), 155 (6.1)*2	135 (5.3), 155 (6.1)*2
	13.1°, 14.5°*2	13.1°, 14.5°*2	13.1°, 14.5°*2	13.1°, 14.5°*2	13.1°, 14.5°*2	13.1°, 14.5°*2
	18°, 19.2°*2	18°, 19.2°*2	18.7°, 20.1°*2	18.7°, 20.1°*2	18.7°, 20.1°*2	18.7°, 20.1°*2
	860 - 900 (1896 - 1984)	860 - 900 (1896 - 1984)	845 - 900 (1863 - 1984)	845 - 900 (1863 - 1984)	845 - 900 (1863 - 1984)	845 - 900 (1863 - 1984)
20	580 - 595 (1279 - 1312)	580 - 595 (1279 - 1312)	535 - 565 (1179 - 1246)	535 - 565 (1179 - 1246)	535 - 565 (1179 - 1246)	535 - 565 (1179 - 1246)
	1440 - 1495 (3175 - 3296)	1440 - 1495 (3175 - 3296)	1380 - 1465 (3042 - 3230)	1380 - 1465 (3042 - 3230)	1380 - 1465 (3042 - 3230)	1380 - 1465 (3042 - 3230)
	985 (2172)	985 (2172)	985 (2172)	985 (2172)	985 (2172)	985 (2172)
	985 (2172)	985 (2172)	985 (2172)	985 (2172)	985 (2172)	985 (2172)
	1970 (4344)	1970 (4344)	1970 (4344)	1970 (4344)	1970 (4344)	1970 (4344)
25	60 (15.9, 13.2)	60 (15.9, 13.2)	60 (15.9, 13.2)	60 (15.9, 13.2)	60 (15.9, 13.2)	60 (15.9, 13.2)
	0.520 (18.4)	0.520 (18.4)	0.520 (18.4)	0.520 (18.4)	0.520 (18.4)	0.520 (18.4)
	195 (122)	195 (122)	195 (122)	195 (122)	195 (122)	195 (122)
	—	—	—	—	—	—
	11.4	11.4	11.4	11.4	11.4	11.4
30	17.8	17.8	17.8	17.8	17.8	17.8
	45 (27)	45 (27)	45 (27)	45 (27)	45 (27)	45 (27)
	84 (52)	84 (52)	84 (52)	84 (52)	84 (52)	84 (52)
	128 (79)	128 (79)	128 (79)	128 (79)	128 (79)	128 (79)
	176 (109)	176 (109)	176 (109)	176 (109)	176 (109)	176 (109)
35	5.6 (18.4)	5.6 (18.4)	5.6 (18.4)	5.6 (18.4)	5.6 (18.4)	5.6 (18.4)
	5.995 (19.7)	5.995 (19.7)	5.995 (19.7)	5.995 (19.7)	5.995 (19.7)	5.995 (19.7)
	1CD-FTV	1CD-FTV	1CD-FTV	1CD-FTV	1CD-FTV	1CD-FTV
	16-Valve, DOHC	16-Valve, DOHC	16-Valve, DOHC	16-Valve, DOHC	16-Valve, DOHC	16-Valve, DOHC
	82.2 x 94.0 (3.24 x 3.70)	82.2 x 94.0 (3.24 x 3.70)	82.2 x 94.0 (3.24 x 3.70)	82.2 x 94.0 (3.24 x 3.70)	82.2 x 94.0 (3.24 x 3.70)	82.2 x 94.0 (3.24 x 3.70)
40	1995 (121.7)	1995 (121.7)	1995 (121.7)	1995 (121.7)	1995 (121.7)	1995 (121.7)
	17.8	17.8	17.8	17.8	17.8	17.8
	Common-Rail Type	Common-Rail Type	Common-Rail Type	Common-Rail Type	Common-Rail Type	Common-Rail Type
	48 or higher	48 or higher	48 or higher	48 or higher	48 or higher	48 or higher
	85 / 3600	85 / 3600	85 / 3600	85 / 3600	85 / 3600	85 / 3600
45	280 / 2000 - 2200	280 / 2000 - 2200	280 / 2000 - 2200	280 / 2000 - 2200	280 / 2000 - 2200	280 / 2000 - 2200
	12-60	12-60	12-60	12-60	12-60	12-60
	1200	1200	1200	1200	1200	1200
	2.0	2.0	2.0	2.0	2.0	2.0
	Dry, Single Plate Diaphragm	Dry, Single Plate Diaphragm	Dry, Single Plate Diaphragm	Dry, Single Plate Diaphragm	Dry, Single Plate Diaphragm	Dry, Single Plate Diaphragm
50	E357	E357	E357	E357	E357	E357
	3.538	3.538	3.538	3.538	3.538	3.538
	1.913	1.913	1.913	1.913	1.913	1.913
	1.258	1.258	1.258	1.258	1.258	1.258
	0.918	0.918	0.918	0.918	0.918	0.918
55	0.690	0.690	0.690	0.690	0.690	0.690
	3.583	3.583	3.583	3.583	3.583	3.583
	—	—	—	—	—	—
	3.684	3.684	3.684	3.684	3.684	3.684
	Ventilated Disc	Ventilated Disc	Ventilated Disc	Ventilated Disc	Ventilated Disc	Ventilated Disc
60	Solid Disc	Solid Disc	Solid Disc	Solid Disc	Solid Disc	Solid Disc
	Drum	Drum	Drum	Drum	Drum	Drum
	Tandem 8"+ 9"	Tandem 8"+ 9"	Tandem 8"+ 9"	Tandem 8"+ 9"	Tandem 8"+ 9"	Tandem 8"+ 9"
	—	—	—	—	—	—
	MacPherson Strut	MacPherson Strut	MacPherson Strut	MacPherson Strut	MacPherson Strut	MacPherson Strut
65	Double Wishbone	Double Wishbone	Double Wishbone	Double Wishbone	Double Wishbone	Double Wishbone
	Standard	Standard	Standard	Standard	Standard	Standard
	Standard	Standard	Standard	Standard	Standard	Standard
	Rack and Pinion	Rack and Pinion	Rack and Pinion	Rack and Pinion	Rack and Pinion	Rack and Pinion
	16.1	16.1	16.1	16.1	16.1	16.1
70	Integral Type	Integral Type	Integral Type	Integral Type	Integral Type	Integral Type

Item \ Area				EUROPE			
Body Type				4-Door Sedan			5-Door Liftback
Vehicle Grade				MID TECHNICAL	MID ELEGANT		MID TECHNICAL
Model Code				AZT251L-AEAEHW	AZT251L-AEAGHW	AZT251R-AEAGHW	AZT251L-ALAEHW
Major Dimensions & Vehicle Weights	Overall	Length	mm (in.)	4630 (182.3)	4630 (182.3)	4630 (182.3)	4630 (182.3)
		Width	mm (in.)	1760 (69.3)	1760 (69.3)	1760 (69.3)	1760 (69.3)
		Height	mm (in.)	1480 (58.3)	1480 (58.3)	1480 (58.3)	1480 (58.3)
	Wheel Base		mm (in.)	2700 (106.3)	2700 (106.3)	2700 (106.3)	2700 (106.3)
	Tread	Front	mm (in.)	1506 (59.3)	1506 (59.3)	1506 (59.3)	1506 (59.3)
		Rear	mm (in.)	1510 (59.4)	1510 (59.4)	1510 (59.4)	1510 (59.4)
	Room	Length	mm (in.)	2090 (82.3)	2090 (82.3)	2090 (82.3)	2090 (82.3)
		Width	mm (in.)	1485 (58.5)	1485 (58.5)	1485 (58.5)	1485 (58.5)
		Height	mm (in.)	1210 (47.6), 1160 (45.7)*1	1210 (47.6), 1160 (45.7)*1	1210 (47.6), 1160 (45.7)*1	1210 (47.6), 1160 (45.7)*1
	Overhang	Front	mm (in.)	910 (35.8)	910 (35.8)	910 (35.8)	910 (35.8)
		Rear	mm (in.)	1025 (40.4)	1025 (40.4)	1025 (40.4)	1025 (40.4)
	Min. Running Ground Clearance		mm (in.)	135 (5.3), 155 (6.1)*2	135 (5.3), 155 (6.1)*2	135 (5.3), 155 (6.1)*2	135 (5.3), 155 (6.1)*2
	Angle of Approach		degrees	13.1°, 14.5°*2	13.1°, 14.5°*2	13.1°, 14.5°*2	13.1°, 14.5°*2
	Angle of Departure		degrees	18.7°, 20.1°*2	18.7°, 20.1°*2	18.7°, 20.1°*2	18.7°, 20.1°*2
	Curb Weight	Front	kg (lb)	820 - 850 (1806 - 1872)	820 - 850 (1806 - 1872)	820 - 850 (1806 - 1872)	820 - 850 (1806 - 1872)
		Rear	kg (lb)	555 - 570 (1222 - 1256)	555 - 570 (1222 - 1256)	555 - 570 (1222 - 1256)	560 - 575 (1233 - 1267)
		Total	kg (lb)	1375 - 1420 (3029 - 3128)	1375 - 1420 (3029 - 3128)	1375 - 1420 (3029 - 3128)	1380 - 1435 (3040 - 3161)
	Gross Vehicle Weight	Front	kg (lb)	935 (2059)	935 (2059)	935 (2059)	935 (2059)
		Rear	kg (lb)	970 (2137)	970 (2137)	970 (2137)	970 (2137)
		Total	kg (lb)	1905 (4196)	1905 (4196)	1905 (4196)	1905 (4196)
	Fuel Tank Capacity		ℓ (Imp.gal.)	60 (15.9, 13.2)	60 (15.9, 13.2)	60 (15.9, 13.2)	60 (15.9, 13.2)
	Luggage Compartment Capacity		m³ (cu.ft.)	0.520 (18.4)	0.520 (18.4)	0.520 (18.4)	0.510 (18.0)
Performance	Max. Speed		km/h (mph)	220 (138)	220 (138)	220 (138)	220 (138)
	Max. Cruising Speed		km/h (mph)	—	—	—	—
	Acceleration	0 to 100 km/h	sec.	9.3	9.3	9.3	9.3
		0 to 400 m	sec.	16.7	16.7	16.7	16.7
	Max. Permissible Speed	1st Gear	km/h (mph)	45 (27)	45 (27)	45 (27)	45 (27)
		2nd Gear	km/h (mph)	84 (52)	84 (52)	84 (52)	84 (52)
		3rd Gear	km/h (mph)	128 (79)	128 (79)	128 (79)	128 (79)
		4th Gear	km/h (mph)	176 (109)	176 (109)	176 (109)	176 (109)
	Min. Turning Radius	Tire	m (ft.)	5.6 (18.4)	5.6 (18.4)	5.6 (18.4)	5.6 (18.4)
		Body	m (ft.)	5.995 (19.7)	5.995 (19.7)	5.995 (19.7)	5.995 (19.7)
Engine	Engine Type			2AZ-FSE	2AZ-FSE	2AZ-FSE	2AZ-FSE
	Valve Mechanism			16-Valve, DOHC	16-Valve, DOHC	16-Valve, DOHC	16-Valve, DOHC
	Bore x Stroke		mm (in.)	88.5 x 96.0 (3.48 x 3.78)	88.5 x 96.0 (3.48 x 3.78)	88.5 x 96.0 (3.48 x 3.78)	88.5 x 96.0 (3.48 x 3.78)
	Displacement		cm³ (cu.in.)	2362	2362	2362	2362
	Compression Ratio			11.0	11.0	11.0	11.0
	Fuel System			EFI	EFI	EFI	EFI
	Research Octane No. or Cetane No. (Diesel)			95 or higher	95 or higher	95 or higher	95 or higher
	Max. Output ( )		kW/rpm	120/5800	120/5800	120/5800	120/5800
	Max. Torque ( )		N·m/rpm	230/4000	230/4000	230/4000	230/4000
Engine Electrical	Battery Capacity (5HR)		Voltage & Amp. hr.	12-48	12-48	12-48	12-48
	Alternator Output		Watts	1200	1200	1200	1200
	Starter Output		kW	1.6	1.6	1.6	1.6
Chassis	Clutch Type			—	—	—	—
	Transaxle Type			U151E	U151E	U151E	U151E
	Transmission Gear Ratio	In First		4.235	4.235	4.235	4.235
		In Second		2.360	2.360	2.360	2.360
		In Third		1.517	1.517	1.517	1.517
		In Fourth		1.047	1.047	1.047	1.047
		In Fifth		0.756	0.756	0.756	0.756
		In Reverse		3.378	3.378	3.378	3.378
	Counter Gear Ratio			1.096	1.096	1.096	1.096
	Differential Gear Ratio (Final)			3.478	3.478	3.478	3.478
	Brake Type	Front		Ventilated Disc	Ventilated Disc	Ventilated Disc	Ventilated Disc
		Rear		Solid Disc	Solid Disc	Solid Disc	Solid Disc
	Parking Brake Type			Drum	Drum	Drum	Drum
	Brake Booster Type and Size		in.	Tandem 8"+ 9"	Tandem 8"+ 9"	Tandem 8"+ 9"	Tandem 8"+ 9"
	Proportioning Valve Type			—	—	—	—
	Suspension Type	Front		MacPherson Strut	MacPherson Strut	MacPherson Strut	MacPherson Strut
		Rear		Double Wishbone	Double Wishbone	Double Wishbone	Double Wishbone
	Stabilizer Bar	Front		Standard	Standard	Standard	Standard
		Rear		Standard	Standard	Standard	Standard
	Steering Gear Type			Rack and Pinion	Rack and Pinion	Rack and Pinion	Rack and Pinion
	Steering Gear Ratio (Overall)			16.1	16.1	16.1	16.1
	Power Steering Type			Integral Type	Integral Type	Integral Type	Integral Type

*1: With Sun Roof
*2: Rough Road Pack
*3: Option

	EUROPE				GENERAL COUNTRIES	
	5-Door Liftback		5-Door Wagon		4-Door Sedan	
	MID ELEGANT		MID TECHNICAL	MID ELEGANT	ENTRY	
	AZT251L-ALAGHW	AZT251R-ALAGHW	AZT251L-AWAEHW	AZT251L-AWAGHW	AZT250L-AEMNK	AZT250R-AEPNK
	4630 (182.3)	4630 (182.3)	4700 (185.0)	4700 (185.0)	4630 (182.3)	4630 (182.3)
	1760 (69.3)	1760 (69.3)	1760 (69.3)	1760 (69.3)	1760 (69.3)	1760 (69.3)
	1480 (58.3)	1480 (58.3)	1525 (60.0)	1525 (60.0)	1480 (58.3)	1480 (58.3)
	2700 (106.3)	2700 (106.3)	2700 (106.3)	2700 (106.3)	2700 (106.3)	2700 (106.3)
	1506 (59.3)	1506 (59.3)	1506 (59.3)	1506 (59.3)	1506 (59.3)	1506 (59.3)
	1510 (59.4)	1510 (59.4)	1510 (59.4)	1510 (59.4)	1510 (59.4)	1510 (59.4)
	2090 (82.3)	2090 (82.3)	2090 (82.3)	2090 (82.3)	2090 (82.3)	2090 (82.3)
	1485 (58.5)	1485 (58.5)	1485 (58.5)	1485 (58.5)	1485 (58.5)	1485 (58.5)
	1210 (47.6), 1160 (45.7)*1	1210 (47.6), 1160 (45.7)*1	1210 (47.6), 1160 (45.7)*1	1210 (47.6), 1160 (45.7)*1	1210 (47.6), 1160 (45.7)*1	1210 (47.6), 1160 (45.7)*1
	910 (35.8)	910 (35.8)	910 (35.8)	910 (35.8)	910 (35.8)	910 (35.8)
	1025 (40.4)	1025 (40.4)	1095 (43.1)	1095 (43.1)	1025 (40.4)	1025 (40.4)
	135 (5.3), 155 (6.1)*2	135 (5.3), 155 (6.1)*2	135 (5.3), 155 (6.1)*2	135 (5.3), 155 (6.1)*2	135 (5.3), 155 (6.1)*2	135 (5.3), 155 (6.1)*2
	13.1°, 14.5°*2	13.1°, 14.5°*2	13.1°, 14.5°*2	13.1°, 14.5°*2	13.1°, 14.5°*2	13.1°, 14.5°*2
	18.7°, 20.1°*2	18.7°, 20.1°*2	18°, 19.2°*2	18°, 19.2°*2	18.7°, 20.1°*2	18.7°, 20.1°*2
	820 - 850 (1806 - 1872)	820 - 850 (1806 - 1872)	820 - 850 (1806 - 1872)	820 - 850 (1806 - 1872)	750 - 780 (1653 - 1720)	780 - 810 (1720 - 1786)
	560 - 570 (1233 - 1256)	560 - 570 (1233 - 1256)	580 - 595 (1278 - 1311)	580 - 595 (1278 - 1311)	525 - 530 (1157 - 1168)	525 - 530 (1157 - 1168)
	1380 - 1445 (3040 - 3183)	1380 - 1445 (3040 - 3183)	1400 - 1445 (3084 - 3183)	1400 - 1445 (3084 - 3183)	1275 - 1310 (2810 - 2888)	1305 - 1340 (2877 - 2954)
	935 (2059)	935 (2059)	935 (2059)	935 (2059)	890 (1962)	890 (1962)
	970 (2137)	970 (2137)	970 (2137)	970 (2137)	915 (2017)	915 (2017)
	1905 (4196)	1905 (4196)	1905 (4196)	1905 (4196)	1805 (3979)	1805 (3979)
	60 (15.9, 13.2)	60 (15.9, 13.2)	60 (15.9, 13.2)	60 (15.9, 13.2)	60 (15.9, 13.2)	60 (15.9, 13.2)
	0.510 (18.0)	0.510 (18.0)	0.520 (18.4)	0.520 (18.4)	0.520 (18.4)	0.520 (18.4)
	220 (138)	220 (138)	220 (138)	220 (138)	195 (121)	190 (121)
	—	—	—	—	—	—
	9.3	9.3	9.5	9.5	10.0	11.8
	16.7	16.7	16.8	16.8	17.1	18.0
	45 (27)	45 (27)	45 (27)	45 (27)	51 (31)	62 (38)
	84 (52)	84 (52)	84 (52)	84 (52)	88 (54)	111 (68)
	128 (79)	128 (79)	128 (79)	128 (79)	136 (84)	174 (108)
	176 (109)	176 (109)	176 (109)	176 (109)	177 (109)	—
	5.6 (18.4)	5.6 (18.4)	5.6 (18.4)	5.6 (18.4)	5.6 (18.4)	5.6 (18.4)
	5.995 (19.7)	5.995 (19.7)	5.995 (19.7)	5.995 (19.7)	5.995 (19.7)	5.995 (19.7)
	2AZ-FSE	2AZ-FSE	2AZ-FSE	2AZ-FSE	1AZ-FE	1AZ-FE
	16-Valve, DOHC	16-Valve, DOHC	16-Valve, DOHC	16-Valve, DOHC	16-Valve, DOHC	16-Valve, DOHC
	88.5 x 96.0 (3.48 x 3.78)	88.5 x 96.0 (3.48 x 3.78)	88.5 x 96.0 (3.48 x 3.78)	88.5 x 96.0 (3.48 x 3.78)	86.0 x 86.0 (3.39 x 3.39)	86.0 x 86.0 (3.39 x 3.39)
	2362	2362	2362	2362	1998 (121.9)	1998 (121.9)
	11.0	11.0	11.0	11.0	9.5	9.5
	EFI	EFI	EFI	EFI	EFI	EFI
	95 or higher	95 or higher	95 or higher	95 or higher	95 or higher	95 or higher
	120 / 5800	120 / 5800	120 / 5800	120 / 5800	100 / 5600	100 / 5600
	230 / 4000	230 / 4000	230 / 4000	230 / 4000	190 / 4000	190 / 4000
	12-48	12-48	12-48	12-48	12-32, 48*3	12-32, 48*3
	1200	1200	1200	1200	1200	1200
	1.6	1.6	1.6	1.6	1.3	1.3
	—	—	—	—	Dry, Single Plate Diaphragm	—
	U151E	U151E	U151E	U151E	E354	U241E
	4.235	4.235	4.235	4.235	3.538	3.943
	2.360	2.360	2.360	2.360	2.045	2.197
	1.517	1.517	1.517	1.517	1.333	1.413
	1.047	1.047	1.047	1.047	1.028	1.020
	0.756	0.756	0.756	0.756	0.820	—
	3.378	3.378	3.378	3.378	3.583	3.145
	1.096	1.096	1.096	1.096	—	—
	3.478	3.478	3.478	3.478	3.944	2.923
	Ventilated Disc	Ventilated Disc	Ventilated Disc	Ventilated Disc	Ventilated Disc	Ventilated Disc
	Solid Disc	Solid Disc	Solid Disc	Solid Disc	Solid Disc	Solid Disc
	Drum	Drum	Drum	Drum	Drum	Drum
	Tandem 8"+ 9"	Tandem 8"+ 9"	Tandem 8"+ 9"	Tandem 8"+ 9"	Tandem 8"+ 9"	Tandem 8"+ 9"
	—	—	—	—	—	—
	MacPherson Strut	MacPherson Strut	MacPherson Strut	MacPherson Strut	MacPherson Strut	MacPherson Strut
	Double Wishbone	Double Wishbone	Double Wishbone	Double Wishbone	Double Wishbone	Double Wishbone
	Standard	Standard	Standard	Standard	Standard	Standard
	Standard	Standard	Standard	Standard	Standard	Standard
	Rack and Pinion	Rack and Pinion	Rack and Pinion	Rack and Pinion	Rack and Pinion	Rack and Pinion
	16.1	16.1	16.1	16.1	16.1	16.1
	Integral Type	Integral Type	Integral Type	Integral Type	Integral Type	Integral Type

Item / Area				GENERAL COUNTRIES
Body Type				4-Door Sedan
Vehicle Grade				ENTRY
Model Code				AZT250L-AEPNK
Major Dimensions & Vehicle Weights	Overall	Length	mm (in.)	4630 (182.3)
		Width	mm (in.)	1760 (69.3)
		Height	mm (in.)	1480 (58.3)
	Wheel Base		mm (in.)	2700 (106.3)
	Tread	Front	mm (in.)	1506 (59.3)
		Rear	mm (in.)	1510 (59.4)
	Room	Length	mm (in.)	2090 (82.3)
		Width	mm (in.)	1485 (58.5)
		Height	mm (in.)	1210 (47.6), 1160 (45.7)*1
	Overhang	Front	mm (in.)	910 (35.8)
		Rear	mm (in.)	1025 (40.4)
	Min. Running Ground Clearance		mm (in.)	135 (5.3), 155 (6.1)*2
	Angle of Approach		degrees	13.1°, 14.5°*2
	Angle of Departure		degrees	18.7°, 20.1°*2
	Curb Weight	Front	kg (lb)	780 - 810 (1720 - 1786)
		Rear	kg (lb)	525 - 530 (1157 - 1168)
		Total	kg (lb)	1305 - 1340 (2877 - 2954)
	Gross Vehicle Weight	Front	kg (lb)	890 (1962)
		Rear	kg (lb)	915 (2017)
		Total	kg (lb)	1805 (3979)
	Fuel Tank Capacity		ℓ (Imp.gal.)	60 (15.9, 13.2)
	Luggage Compartment Capacity		m^3 (cu.ft.)	0.520 (18.4)
Performance	Max. Speed		km/h (mph)	190 (121)
	Max. Cruising Speed		km/h (mph)	—
	Acceleration	0 to 100 km/h	sec.	11.8
		0 to 400 m	sec.	18.0
	Max. Permissible Speed	1st Gear	km/h (mph)	62 (38)
		2nd Gear	km/h (mph)	111 (68)
		3rd Gear	km/h (mph)	174 (108)
		4th Gear	km/h (mph)	—
	Min. Turning Radius	Tire	m (ft.)	5.6 (18.4)
		Body	m (ft.)	5.995 (19.7)
Engine	Engine Type			1AZ-FE
	Valve Mechanism			16-Valve, DOHC
	Bore x Stroke		mm (in.)	86.0 x 86.0 (3.39 x 3.39)
	Displacement		cm^3 (cu.in.)	1998 (121.9)
	Compression Ratio			9.5
	Fuel System			EFI
	Research Octane No. or Cetane No. (Diesel)			95 or higher
	Max. Output ( )		kW/rpm	100/5600
	Max. Torque ( )		N·m/rpm	190/4000
Engine Electrical	Battery Capacity (5HR)		Voltage & Amp. hr.	12-32, 48*3
	Alternator Output		Watts	1200
	Starter Output		kW	1.3
Chassis	Clutch Type			—
	Transaxle Type			U241E
	Transmission Gear Ratio	In First		3.943
		In Second		2.197
		In Third		1.413
		In Fourth		1.020
		In Fifth		—
		In Reverse		3.145
	Counter Gear Ratio			—
	Differential Gear Ratio (Final)			2.923
	Brake Type	Front		Ventilated Disc
		Rear		Solid Disc
	Parking Brake Type			Drum
	Brake Booster Type and Size		in.	Tandem 8"+ 9"
	Proportioning Valve Type			—
	Suspension Type	Front		MacPherson Strut
		Rear		Double Wishbone
	Stabilizer Bar	Front		Standard
		Rear		Standard
	Steering Gear Type			Rack and Pinion
	Steering Gear Ratio (Overall)			16.1
	Power Steering Type			Integral Type

*1: With Sun Roof
*2: Rough Road Pack
*3: Option

AVENSIS VERSO

OUTLINE OF NEW FEATURES

The following changes are made for the new Avensis Verso.

1. Model Line-up

- The 1AZ-FE engine has been discontinued and the 2AZ-FE engine has been introduced on the models for Australia.
- The 6-passenger right-hand drive (RHD) model for Europe has been discontinued.

2. Exterior

- The designs of the front bumper have been changed.
- The designs of the headlights have been changed.
- The designs of the rear combination lights have been changed.
- The design of the 16-inch aluminum disc wheel has been changed.
- The following exterior colors have been added:

Added Color No.	Added Color Name
1D4	Silver Metallic
202	Black
3Q3	Dark Red Mica Metallic
580	Yellow Mica Metallic
8K2	Light Purplish Blue Mica Metallic
8M6	Blue Mica

3. 1AZ-FE Engine

- The camshafts have been changed to those with different operating angles in order to improve fuel economy.
- An ETCS-i (Electronic Throttle Control System-intelligent) function has been adopted. Accordingly, an electronic throttle body with a built-in Hall IC type throttle position sensor has been adopted.
- In accordance with the adoption of the ETCS-i function, a linear type accelerator position sensor has been adopted.
- The alternator has been changed to a segment conductor type.
- The models for Europe have adopted injectors with improved atomization of fuel in order to comply with the STEP IV exhaust emission regulations.
- To comply with the exhaust emission regulations, the number of startup converters (TWC) has been changed from two to one, and an under floor catalyst has been added.
- The number of the air fuel ratio sensor and the oxgen sensor become one.
- SLLC (Super Long Life Coolant) has been newly provided.

4. 2AZ-FE Engine

The 2AZ-FE engine has been newly provided on the models for Australia.

5. 1CD-FTV Engine

SLLC (Super Long Life Coolant) has been newly provided.

6. Shock Absorber

- On all models, the linear control valves of the shock absorbers have been changed to the multi-leaf type linear control valve.
- This shock absorber generates the damping force in the extremely low piston speed range in order to realize a flat ride comfort.

7. Brake

- The brake control system (ABS with EBD, brake assist, TRC, and VSC) has been newly adopted as optional equipment on the models fur Europe.
- To control VSC, braking control has been adopted under the conditions in which the limitations of the tires are not exceeded.
- A mechanical type brake assist has been newly provided as standard equipment on the models without the VSC system. Also, a compact and lightweight actuator has been adopted.
- The brake control system (ABS with EBD, brake assist, TRC, and VSC) uses CAN communication.

8. Seat

- Sports seats have been newly provided as standard equipment for the front seat on the models for Australia in order to improve the comfort.
- A headrest has been provided as standard equipment on the center rear seat on the models for Australia and general countries.
- Top tether anchors have been provided for the rear No. 1 seat.

9. Multiplex Communication

CAN communication has been adopted in the brake control system (ABS with EBD, brake assist, TRC and VSC).

10. Combination Meter

- An Optitron display type combination meter has been newly provided as standard equipment on the models for Europe and general countries. The optitron display type meter realizes excellent visibility through the use of smoke acrylic in the protective panel, and LEDs (Light Emitting Diodes) that is vary bright and has high contrast for illuminating the indicator and the dial.
- A VSC warning light, SLIP indicator, and a TRC OFF indicator have been added on the models for Europe equipped with VSC.
- A cruise MAIN indicator light has been added on the model for Australia.

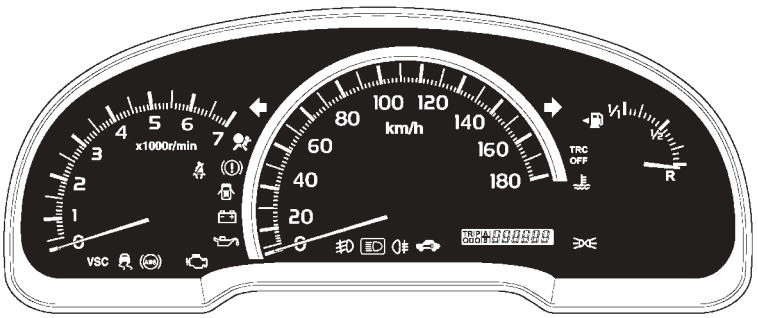

Model for Europe Equipped with VSC

258AS32

11. Air Conditioner

- An automatic air conditioner has been newly provided as standard equipment on the right-hand drive (RHD) models for Europe and general countries.
  An automatic air conditioner has been made newly available as optional equipment on the left-hand drive (LHD) models for Europe.
- A humidity control automatic air conditioner has been newly provided as standard equipment on the models for Australia.
- A variable-capacity compressor has been newly adopted on the models for Australia in order to reduce energy consumption.
- The temperature-humidity integrated sensor has been adopted on the models for Australia.
- In accordance with the adoption of the automatic air conditioner, the solar sensor has been adopted on all models.

12. Navigation System

The navigation system on the models for Europe has been updated with the addition of new function.

13. Engine Immobilizer System

On all models, the transponder key ECU controls the engine immobilizer system by communicating with the Engine ECU. Also, the encoding of the ID in the ignition key and the ID stored in the transponder key ECU has been changed from the conventional fixed encoding to an encrypted encoding type. As a result, the theft deterrence performance has been improved.

14. Cruise Control System

A cruise control system has been newly provided as standard equipment on the models for Australia.

15. Outside Rear View Mirror

Power-retracting type mirrors coated with blue hydrophilic film have been provided as standard equipment on the models for general countries.

16. Audio System

- A glass antenna has been newly provided as standard equipment on all models.
- The audio systems listed below have been newly adopted as optional equipment.

Design	Specifications	Application
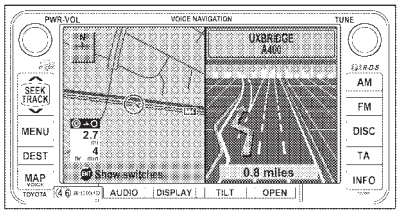 251EQ01	● LCD type ● AM/FM Tuner ● DVD Player ● CD Player ● RDS-TMC* ● 6-speaker System ● Manufacturer: AISIN AW	Europe: option
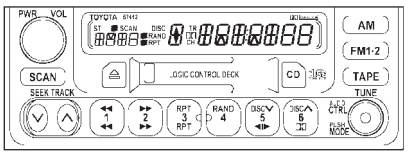 251EQ02	● AM/FM Tuner ● Cassette Player ● 6-speaker System ● Manufacturer: Panasonic	Australia, General Countries : option

*: Radio Data System – Traffic Message Channel

- Steering pad switches have been made newly available as optional equipment on the models for Europe. The audio control switches with high frequency use have been located on the steering wheel in the form of steering pad switch to improve the ease of use.

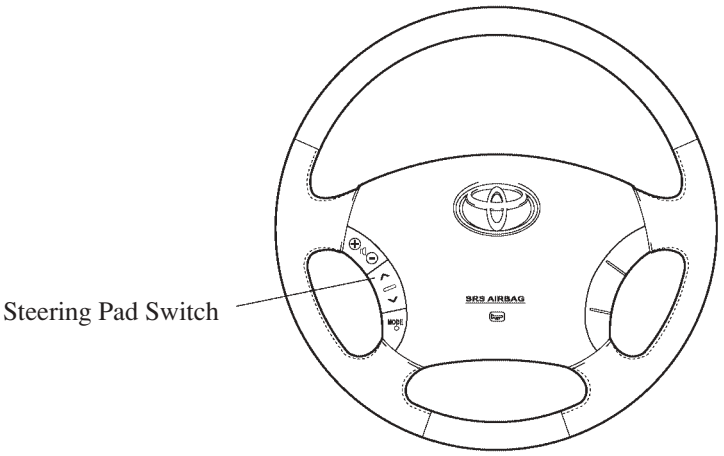

258AS09

4

MODEL CODE

ACM20 R – A R S D K W

1 2 3 4 5 6 7 8

1 BASIC MODEL CODE

CODE	DRIVE TYPE	ENGINE
ACM20	2WD	1AZ-FE
ACM21		2AZ-FE
CLM20		1CD-FTV

2 STEERING WHEEL POSITION

L : Left-Hand Drive
R : Right-Hand Drive

3 MODEL NAME

A : Avensis Verso

4 SEATING CAPACITY

N : 6-passenger
R : 7-passenger

5 GEAR SHIFT TYPE

M: 5-Speed Manual, Floor
S : 4-Speed Automatic, Column

6 GRADE

D : —
E : —

7 ENGINE SPECIFICATION

K : DOHC and EFI
Y : Common-Rail Diesel

8 DESTINATION

W: Europe
Q : Australia
Blank: General Countries

MODEL LINE-UP

: New

DESTIN-ATION	ENGINE	SEATING CAPACITY	TRANSAXLE		
			5-Speed Manual		4-Speed Automatic
			E356	E355	U241E
Europe	1AZ-FE	6	ACM20L-ANMDKW	—	ACM20L-ANSDKW
		7	ACM20L-ARMDKW	—	ACM20L-ARSDKW
			ACM20R-ARMDKW	—	ACM20R-ARSDKW
	1CD-FTV	6	—	CLM20L-ANMDYW	—
		7	—	CLM20L-ARMDYW	—
			—	CLM20R-ARMDYW	—
Australia	2AZ-FE	7	—	—	ACM21R-ARSEKQ
General Countries	1AZ-FE	7	—	—	ACM20R-ARSEK

4

NEW FEATURES

■EXTERIOR

1. Front View

- The design of the front bumper has been changed. A sportier style with a commanding presence has been achieved.
- The design of the headlights has been changed in order to express a sharper and wider look.

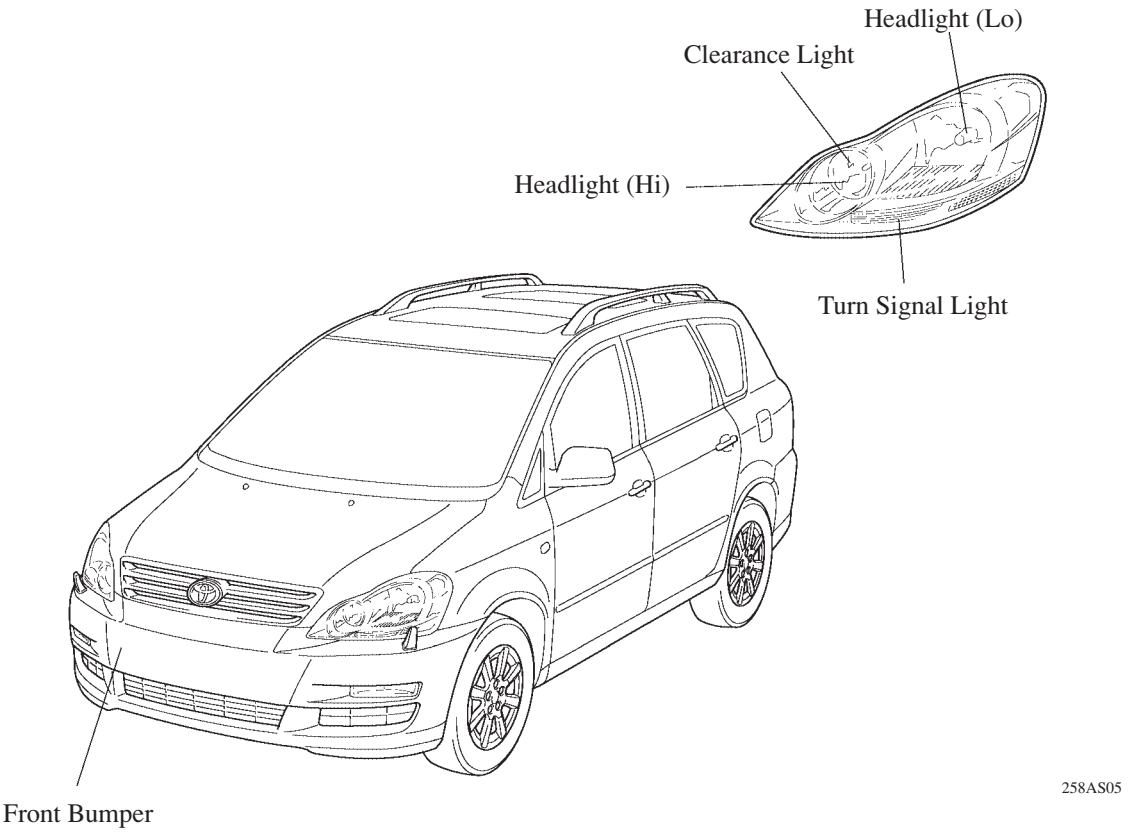

New

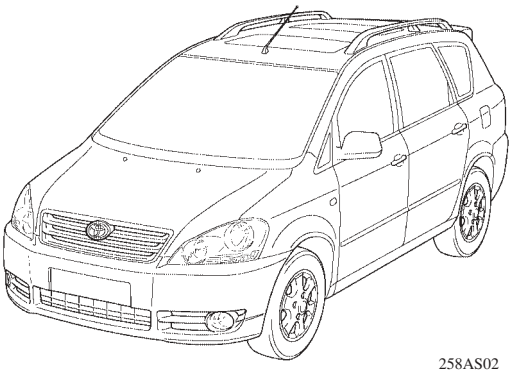

Previous

2. Rear View

- The design of the rear combination lights has been changed to achieve a high-quality style.

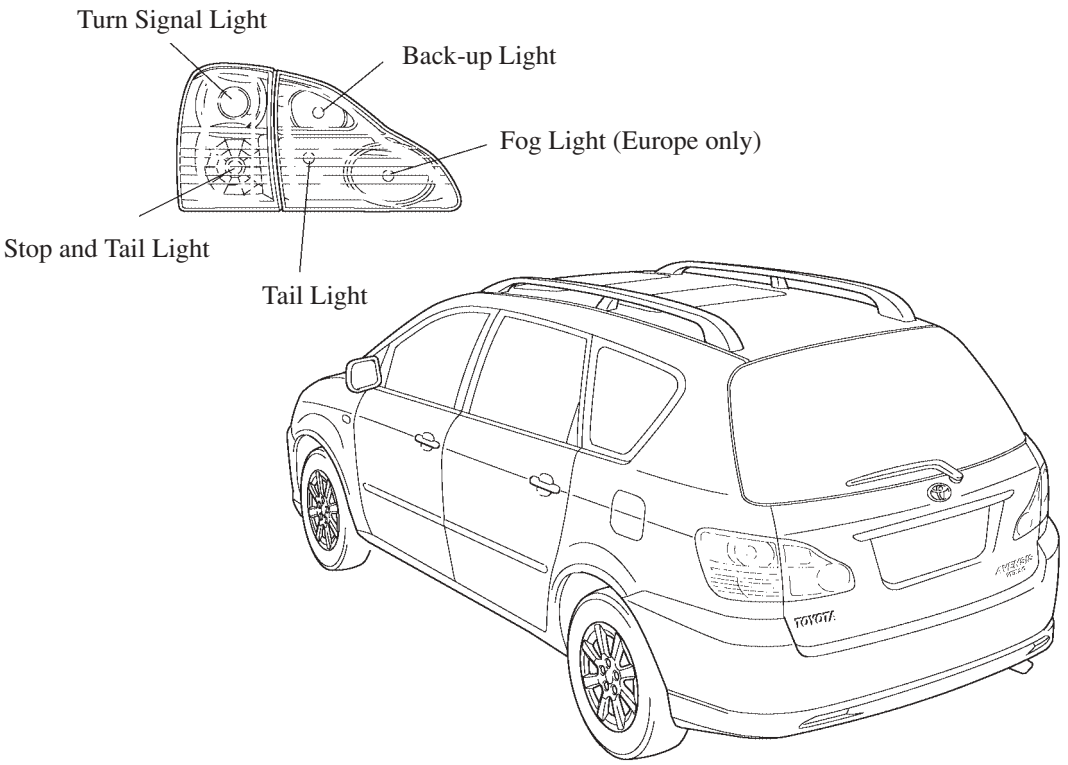

258AS03

New

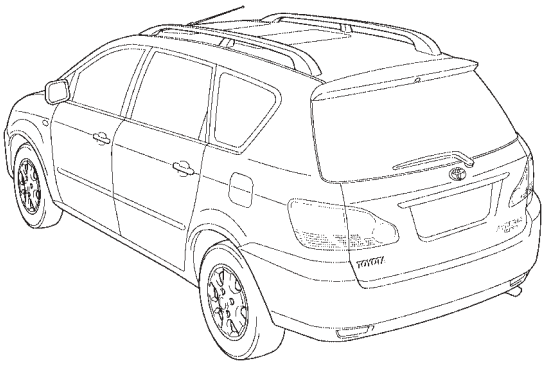

258AS04

Previous

3. Tire and Disc Wheel

- On all modes, the design of the aluminum disc wheel has been changed.

Tire Size		205/60R16
Disc Wheel Size		16 x 6 1/2JJ
Disc Wheel Material		Aluminum
P.C.D.*	mm (in.)	114.3 (4.5)
Off Set	mm (in.)	45 (1.8)
Wheel Design		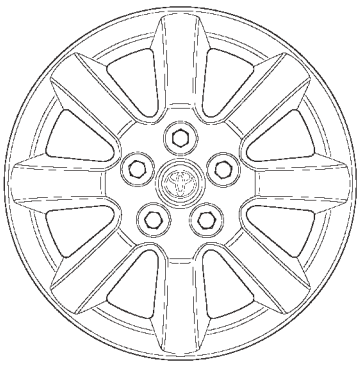 258AS06

*: Pitch Circle Diameter

■1AZ-FE ENGINE

1. Major Difference (from previous 1AZ-FE Engine)

Item	Outline
Destination	Europe & General Countries
Valve Mechanism	● The cam profile has been changed in conjunction with the change in the valve timing.
Cooling System (See Page 157)	● SLLC (Super Long Life Coolant) has been adopted.
Intake and Exhaust System (See Page 158)	● An electronic throttle body with a built-in no-contact type throttle position sensor and a throttle control motor has been adopted. ● The exhaust system has been revised to optimize exhaust performance. In addition, the 2 TWCs located directly below the exhaust manifold have been integrated into 1 TWC, and a TWC has been added under the floor. ● The ceramic type TWC has been adopted directly below the exhaust manifold and under floor.
Fuel System (See Page 160)	● The compact 12-hole type injector with high atomizing performance has been adopted.
Charging System (See Page 161)	● A segment conductor type alternator has been adopted.
Engine Control System (See Page 163)	● The ETCS-i (Electronic Throttle Control System-intelligent) has been adopted. ● A planar type air-fuel ratio sensor has been adopted. ● A flat type knock sensor has been adopted. ● A contact type accelerator pedal position sensor has been adopted. ● A no-contact type throttle position sensor has been adopted. ● The number of the air fuel ratio sensor and the oxygen sensor become one.

▶ Engine Specifications ◀

Model				New	Previous
No. of Cyli. & Arrangement				4-Cylinder, Inline	←
Valve Mechanism				16-Valve DOHC, Chain Drive	←
Combustion Chamber				Pentroof Type	←
Manifolds				Cross-Flow	←
Fuel System				EFI	←
Ignition System				DIS	←
Displacement cm^3 (cu. in.)				1998 (121.9)	←
Bore & Stroke mm (in.)				86.0 x 86.0 (3.39 x 3.39)	←
Compression Ratio		Unleaded Gasoline		9.8 : 1	←
Max. Output (EEC)		Unleaded Gasoline		110 kW @ 6000 rpm	←
Max. Torque (EEC)		Unleaded Gasoline		192 N·m @ 4000 rpm	←
Valve Timing	Intake	Unleaded Gasoline	Open	3° – 43° BTDC	–4° – 46° BTDC
			Close	60° – 20° ATDC	60° – 10° ATDC
	Exhaust		Open	37° BBDC	45° BBDC
			Close	3° ATDC	←
Fuel Octane Number RON		Unleaded Gasoline		95 or Higher	←
Oil Grade				API SL, EC or ILSAC	API SJ, EC or ILSAC
Emission Regulation				European STEP IV	European STEP III

2. Cooling System

Super Long Life Coolant

The TOYOTA genuine Super Long Life Coolant (SLLC) has been adopted. As a result, the maintenance interval has been extended.

▶ Specifications ◀

Model			New	Previous
Engine Coolant	Capacity liters (US qts, Imp.qts)	with front heater	6.8 (7.2, 6.0)	←
		with front & rear heater	7.5 (7.9, 6.6)	
		without heater	5.9 (6.2, 5.2)	
	Type		TOYOTA Genuine SLLC	TOYOTA Genuine LLC
	Color		Pink	Red
	Maintenance Intervals for Europe	First time	160,000 km (100,000 mile)	60,000 km (37,500 mile)
		Subsequent	Every 80,000 km (50,000 mile)	Every 30,000 km (18,000 mile)
	Maintenance Interval for General Countries	Replace at first time	160,000 km (100,000 mile)	Replace Every 40,000 km (25,000 mile) or 24 months Whichever comes first.
		Replace at first time subsequent	Every 80,000 km (50,000 mile)	
Thermostat	Operating Temperature °C (°F)		80 – 84 (176 – 183)	←

- SLLC is pre-mixed (50% coolant and 50% distilled water), so no dilution is needed when adding or replacing SLLC in the vehicle.
- If LLC is mixed with LLC, the interval for LLC (every 30,000 km (18,000 mile) for Europe model/40,000 km (25,000 mile) or 24 months whichever comes first for General Countries model) should be used.
- You can also apply the new maintenance interval (every 30,000 km (18,000 mile) for Europe model/40,000 km (25,000 mile) or 24 months whichever comes first for General Countries model) to vehicle initially filled with LLC (red-colored), if you use SLLC (pink-colored) for the coolant change.

3. Intake and Exhaust System

Throttle Body

- A DC motor with excellent response and minimal power consumption is used for the throttle control motor. The engine ECU performs the duty ratio control of the direction and the amperage of the current that flows to the throttle control motor in order to regulate the opening angle of the throttle valve.
- The link-less type throttle body has adopted and it realizes excellent throttle control.
  For details of ETCS-i control, refer to page 174.

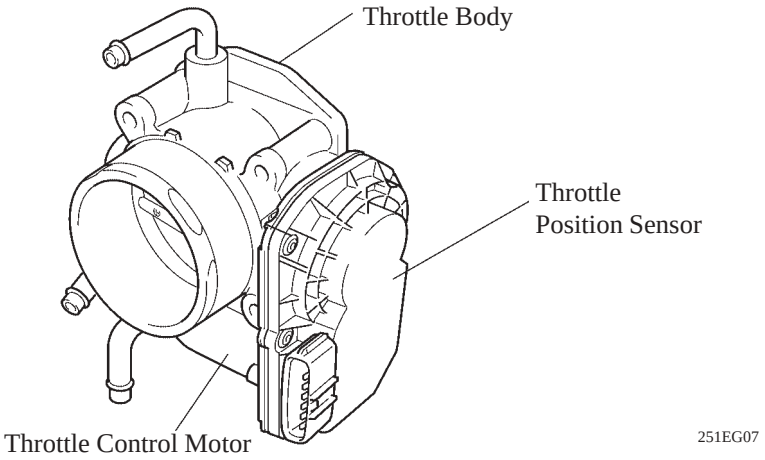

Exhaust Manifold

- To comply with the STEP-IV exhaust emission regulations in Europe, the number of startup converters (TWC) has been changed from two to one, and the warm-up performance of the catalyst has been improved, in order to reduce the exhaust emissions during the starting of the engine.
- The exhaust manifold has been changed from the unequal-length to an equal-length type, in order to improve performance in the low- to medium-speed range and fuel economy in the high-speed range.

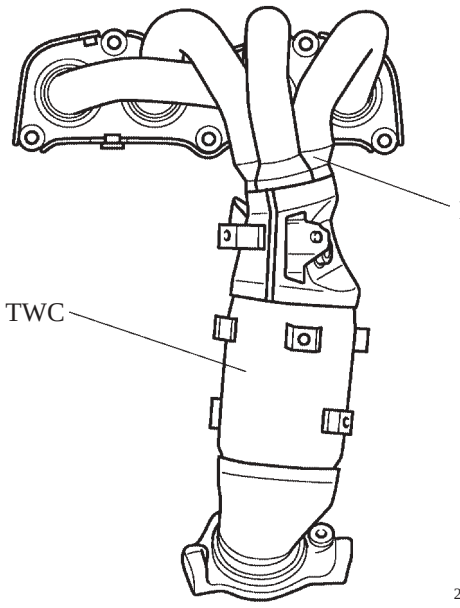

New

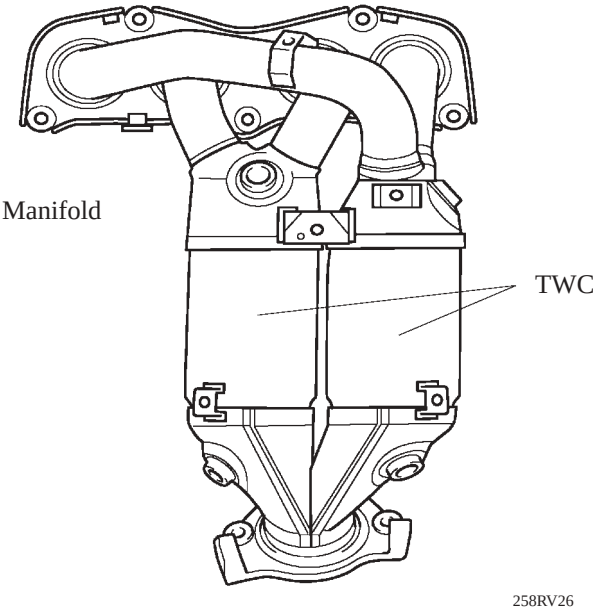

Previous

Three-Way Catalytic Converter

- The ceramic type TWC (Three-Way Catalytic Converter) has been adopted directly below the exhaust manifold and under floor. This TWC enables to improve in reducing the amount of exhaust emissions by optimizing the cell's density and wall thickness.

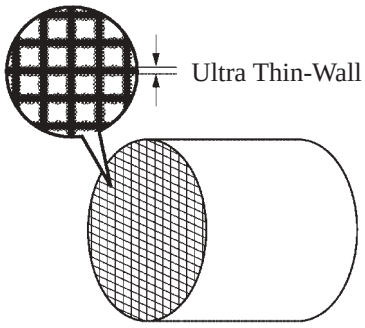

198EG06

Exhaust Pipe

- To comply with the Step-IV exhaust emission regulations, the exhaust pipe system on the models for Europe has adopted an under floor catalyst, and a dual pipe construction in the pipe upstream of the catalyst.

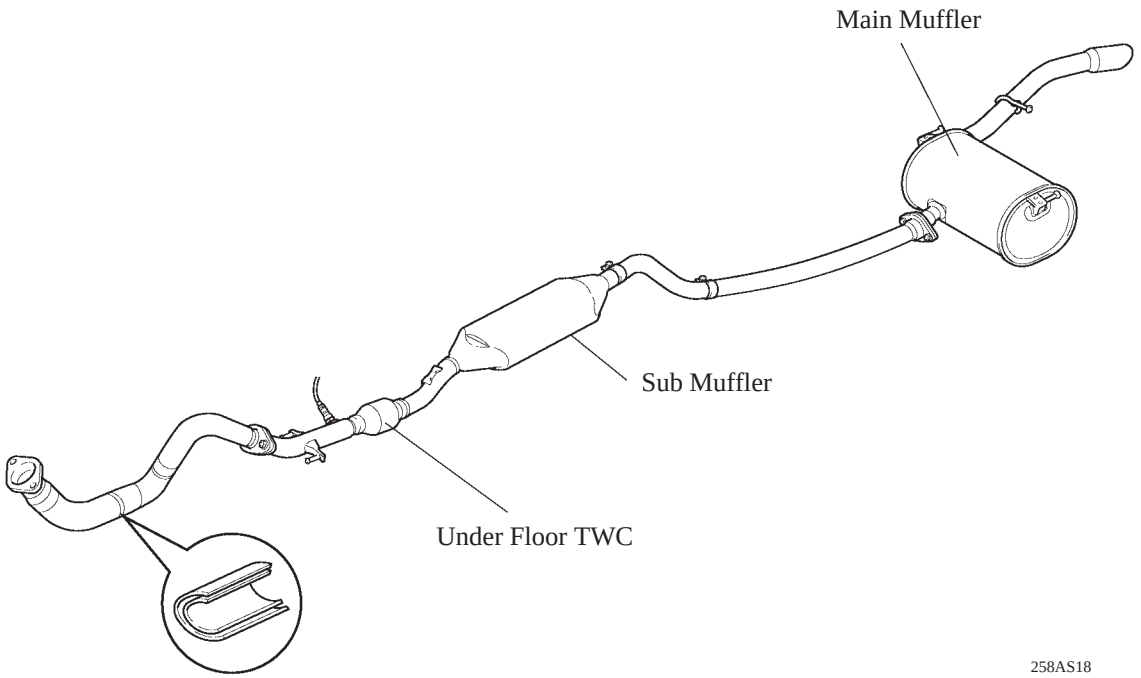

258AS18

4. Fuel System

Fuel Injector

- An injector, based on the compact 12-hole type injector of the previous model, with moving parts that have been made lightweight and the magnetic circuit optimized performance has been adopted.
- The injector nozzle has been placed closer to the orifice, which reducing the distance between the injector and the intake valve. This reduces the amount of fuel that adheres to the intake port, which improves fuel economy and reduces exhaust emissions.
- The diameter of the new injector orifice has been increased from 0.18 mm (0.0071 in.) to 0.20 mm (0.0079 in.) because a slight increase in the orifice diameter improves the injection angle and facilitates the instantaneous mixture of fuel with air. This promotes the atomization of fuel into a fine mist.
- The orifice of the new injector has been changed from the straight type to the taper type. As a result, the fuel supply efficiency has been increased in order to ensure the reliable supply of fuel into the combustion chamber.

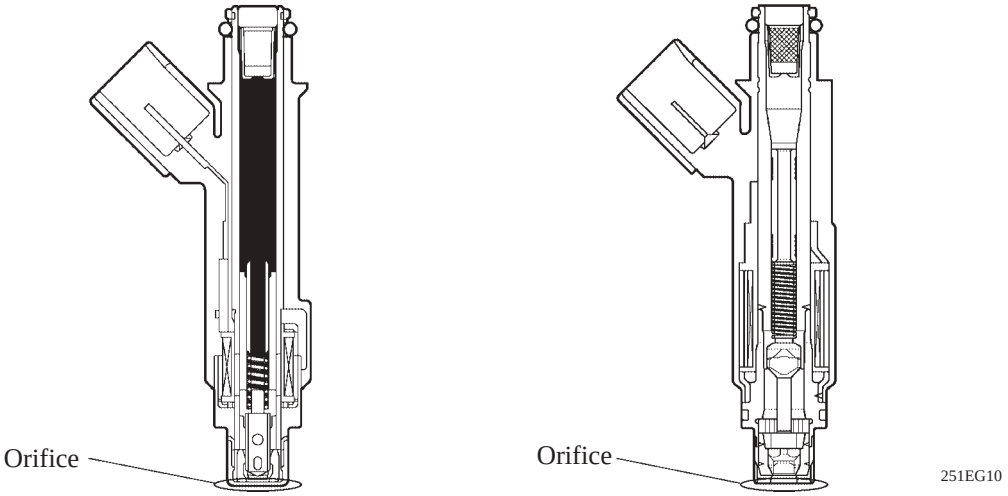

New **Previous**

New	Previous
0.2 mm (0.0079 in.) 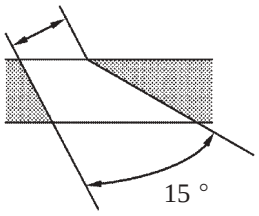 251EG04	0.18 mm (0.0071 in.) 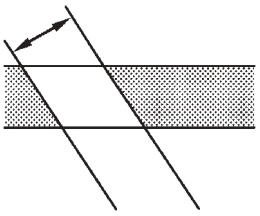 251EG05

5. Charging System

General

- Instead of the conventional type alternator, a compact and lightweight segment conductor type alternator has been adopted for 1AZ-FE engine model. This type of alternator generates high amperage output in a highly efficient manner.
- This alternator has a joined segment conductor system, in which multiple segment conductors are welded together to form the stator. Compared to the conventional winding system, the electrical resistance is reduced due to the shape of the segment conductors, and their arrangement helps to make the alternator more compact.

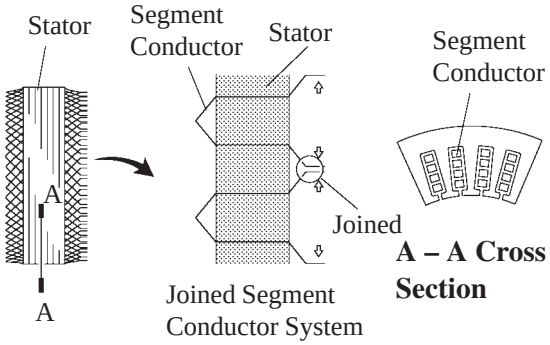

Segment Conductor Type Alternator

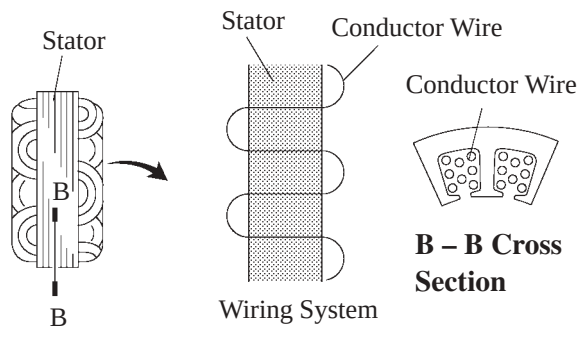

Conventional Type Alternator

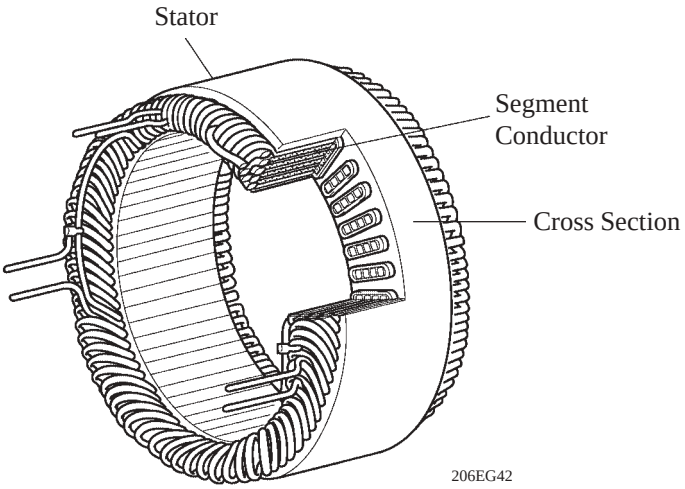

Stator of Segment Conductor Type Alternator

▶ Specifications ◀

Type	Segment Conductor (SE0)
Rated Voltage	12 V
Output Rated	100 A
Initial Output Starting Speed	1500 rpm Max.

▶ Wiring Diagram ◀

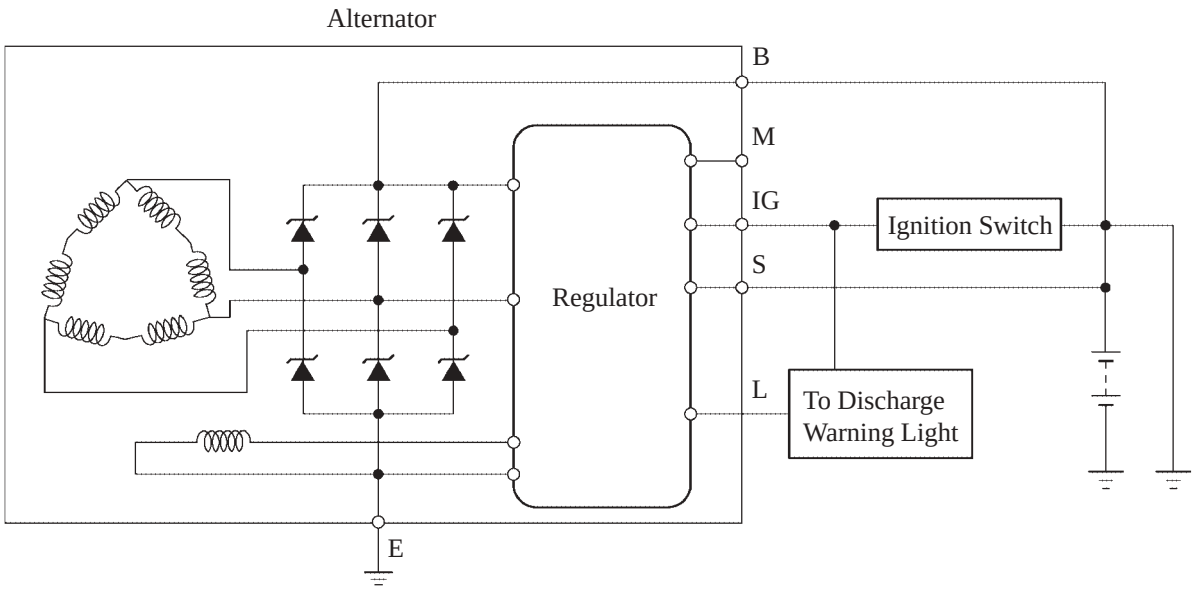

251EG03

6. Engine Control System

General

The engine control system of the 1AZ-FE engine of the new Avensis Verso has following system.

System	Outline	New	Previous
EFI (Electronic Fuel Injection)	An L-type EFI system directly detects the intake air mass with a hot wire type mass air flow meter.	○	○
ESA (Electronic Spark Advance)	Ignition timing is determined by the engine ECU based on signals from various sensors. The engine ECU corrects ignition timing in response to engine knocking.	○	○
ETCS-i (Electronic Throttle Control System-intelligent) (See page 174)	● Optimally controls the throttle valve opening in accordance with the amount of accelerator pedal effort and the condition of the engine and the vehicle. ● A link-less type is used, without an accelerator cable. ● A contact type accelerator pedal position sensor is provided on the accelerator pedal. ● A no-contact type throttle position sensor and accelerator pedal position sensor are used. ● Controls the fast idle and idle speed.	○	—
VVT-i (Variable Valve Timing-intelligent)	Controls the intake camshaft to an optimal valve timing in accordance with the engine condition.	○	○
Air Fuel Ratio Sensor, Oxygen Sensor Heater Control	Maintains the temperature of the air fuel ratio sensor or oxygen sensor at an appropriate level to increase accuracy of detection of the oxygen concentration in the exhaust gas.	○	○
Air Conditioner Cut-off Control*	By turning the air conditioning compressor ON or OFF in accordance with the engine condition, drivability is maintained.	○	○
Cooling Fan Control System	Radiator cooling fan operation is controlled by water temperature sensor signal (THW) and the condition of the air conditioner operation.	○	○
Fuel Pump Control	Fuel pump operation is controlled by signal from the engine ECU.	○	○
	A fuel cut control is adopted to stop the fuel pump when the airbag is deployed during front or side collision.	○	○
Evaporative Emission Control	The engine ECU controls the purge flow of evaporative emission (HC) in the charcoal canister in accordance with engine conditions.	○	○
Engine Immobilizer	Prohibits fuel delivery and ignition if an attempt is made to start the engine with an invalid ignition key.	○	○
	The ID code stored in the transponder key ECU is compared with that of the transponder tip in the ignition key.	○	—
Diagnosis	When the engine ECU detects a malfunction, the engine ECU diagnoses and memorizes the failed section.	○	○
	All the DTCs (Diagnostic Trouble Codes) have been made to correspond to the SAE controlled codes.	○	—
Fail-Safe	When the engine ECU detects a malfunction, the engine ECU stops or controls the engine according to the data already stored in the memory.	○	○

*: With Air Conditioner Models.

Construction

The configuration of the engine control system in the 1AZ-FE of the new Avensis Verso is as shown in the following chart.

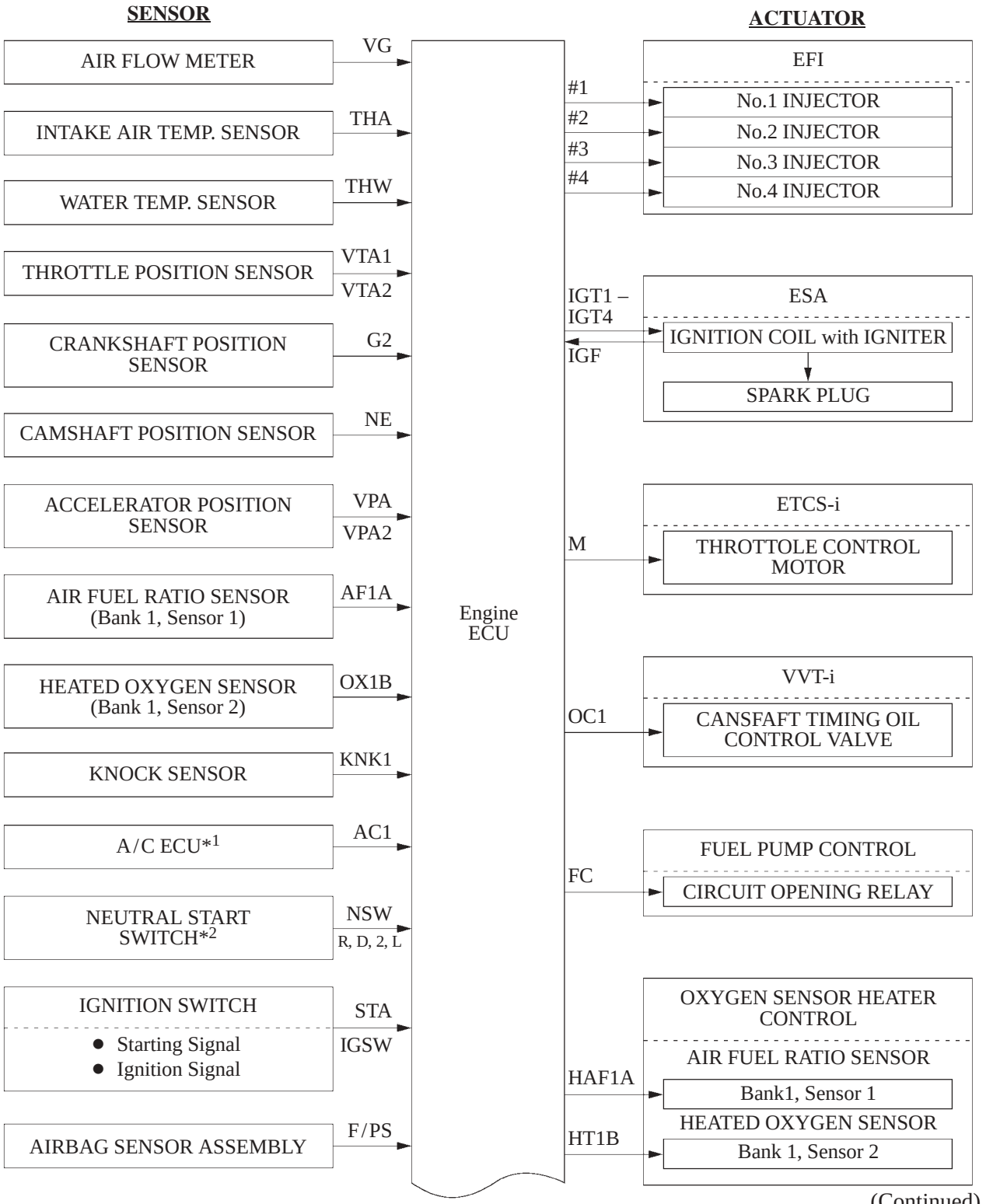

(Continued)

258AS36

*1: With Air Conditioner

*2: Only for Automatic Transaxle

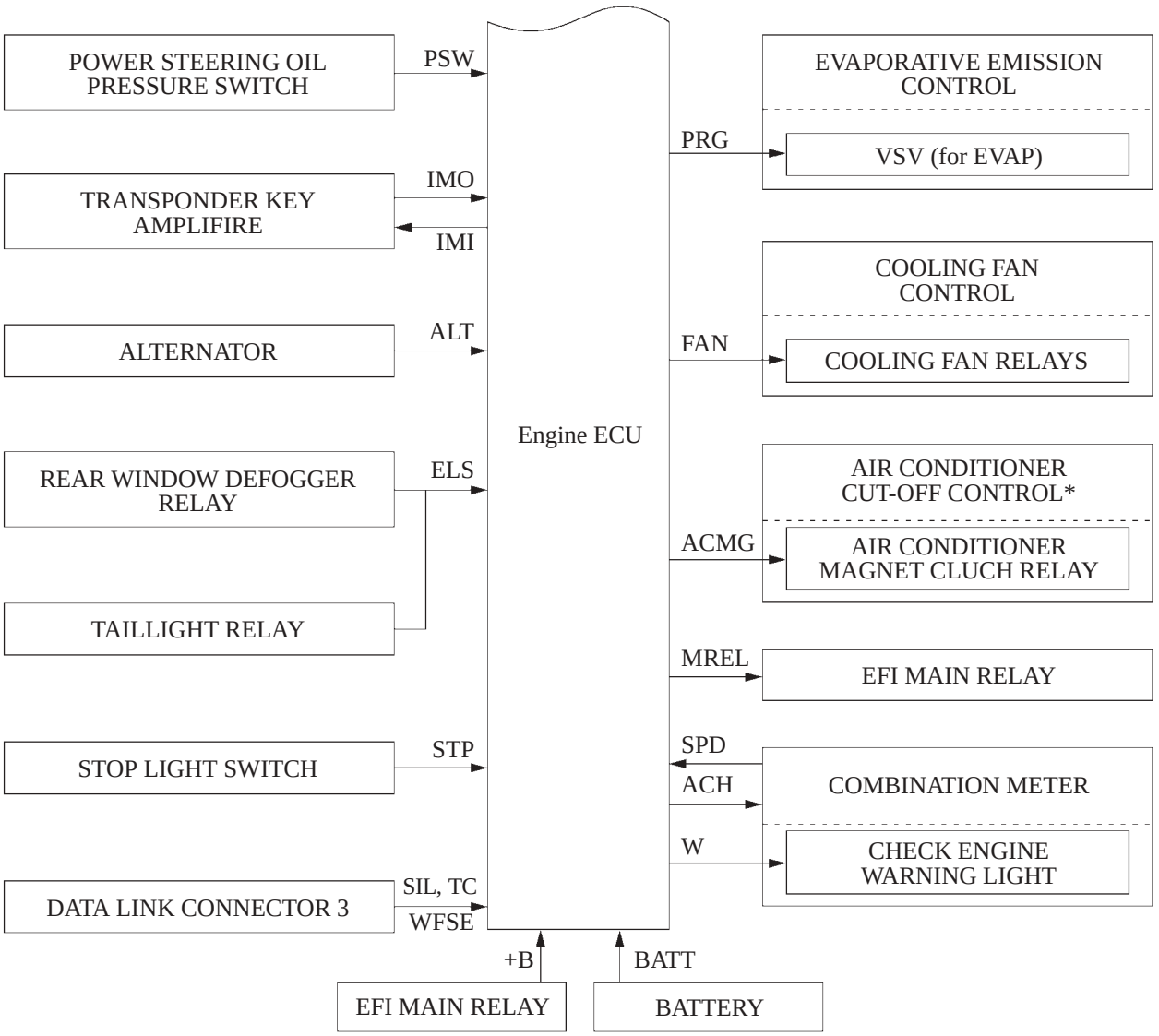

258AS37

*: With Air Conditioner

4

Engine Control System Diagram

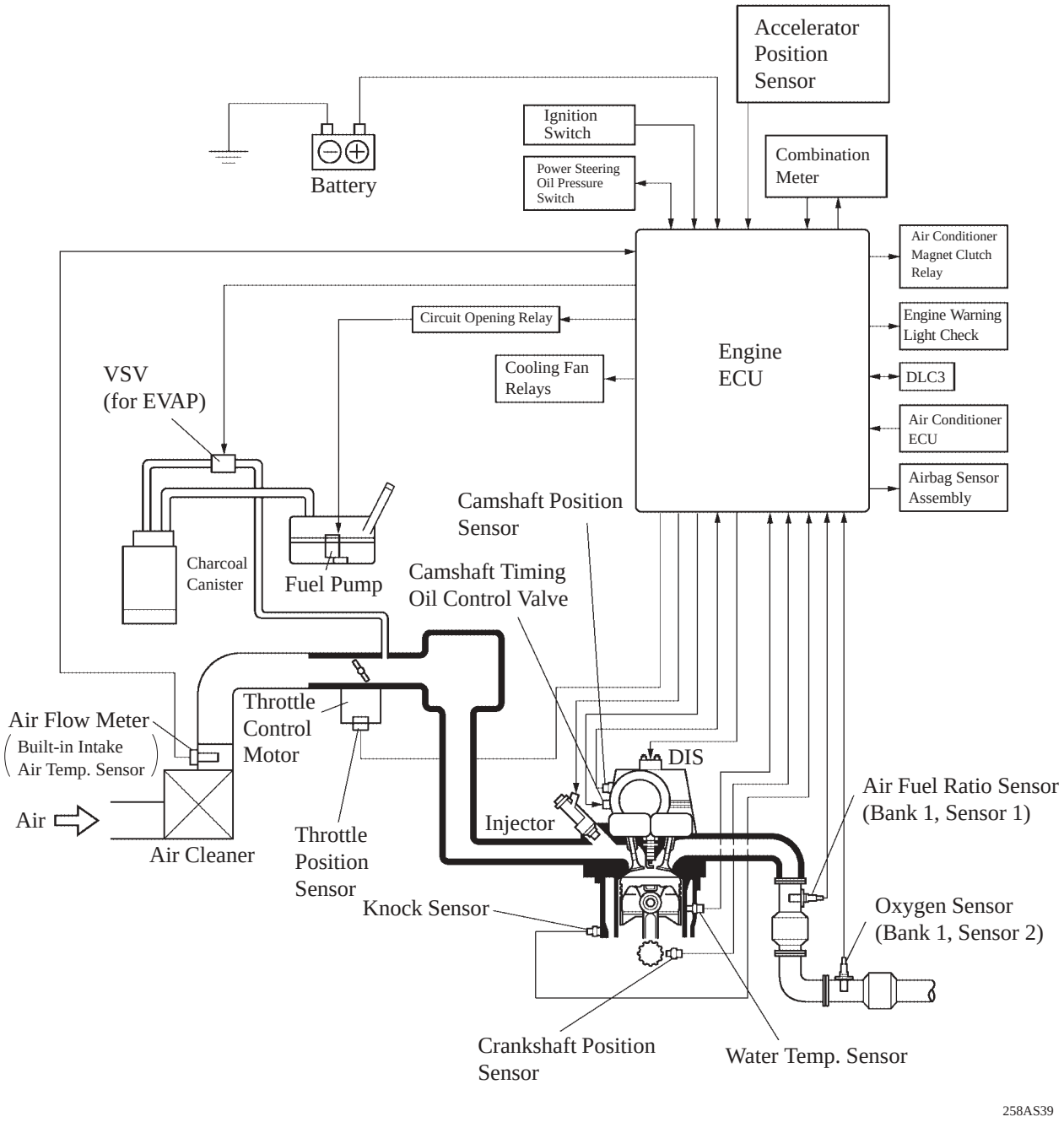

Layout of Main Components

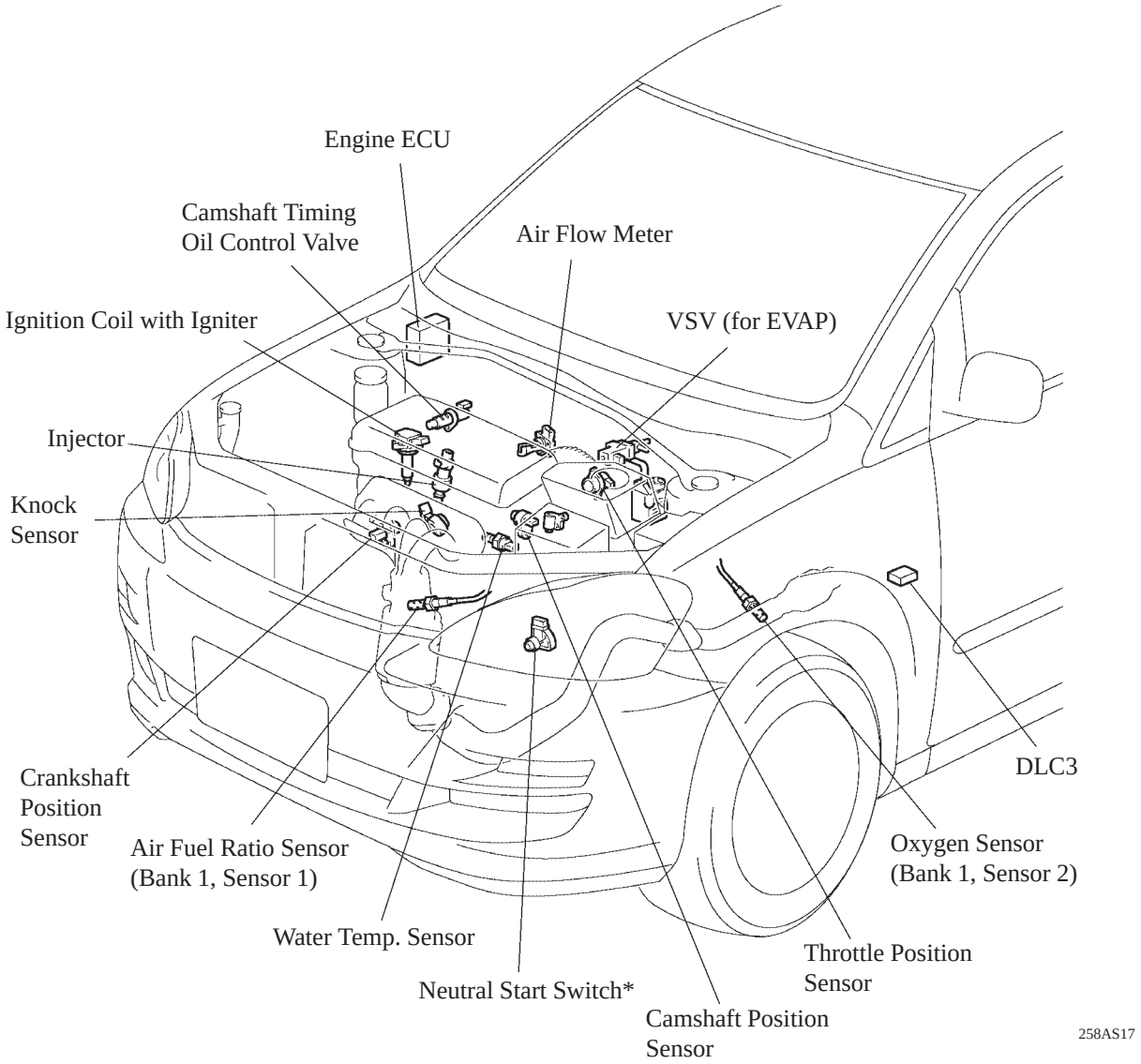

*: Only for Automatic Transaxle

Main Components of Engine Control System

1) General

The following table compares the main components for new and previous 1AZ-FE engine.

Components	New		Previous	
	Outline	Quantity	Outline	Quantity
Engine ECU	32-bit CPU	1	←	1
Air Fuel Ratio Sensor (Bank 1, Sensor 1)	with Heater Type (Planar Type)	1	with Heater Type (Cup Type)	2
Oxygen Sensor (Bank 1, Sensor 2)	with Heater Type (Cup Type)	1	←	2
Air Flow Meter	Hot-wire Type	1	←	
Crankshaft Position Sensor (Rotor Teeth)	Pick-up Coil Type (36-2)	1	←	
Camshaft Position Sensor (Rotor Teeth)	Pick-up Coil Type (3)	1	←	
Knock Sensor	Built-in Piezoelectric Element Type (Flat Type)	1	Built-in Piezoelectric Element Type (Resonant Type)	1
Accelerator Pedal Position Sensor	Contact Type	1	—	
Throttle Position Sensor	No-contact Type	1	Contact Type	1

2) Air Fuel Ratio Sensor (Planar Type)

The planar type of air fuel ratio sensor has been adopted.
Compared to the conventional type, the sensor and heater portions of the planar type are narrower overall. Because the heat of the heater acts directly on the alumina and zirconia (of the sensor portion) it accelerates the activation of the sensor.

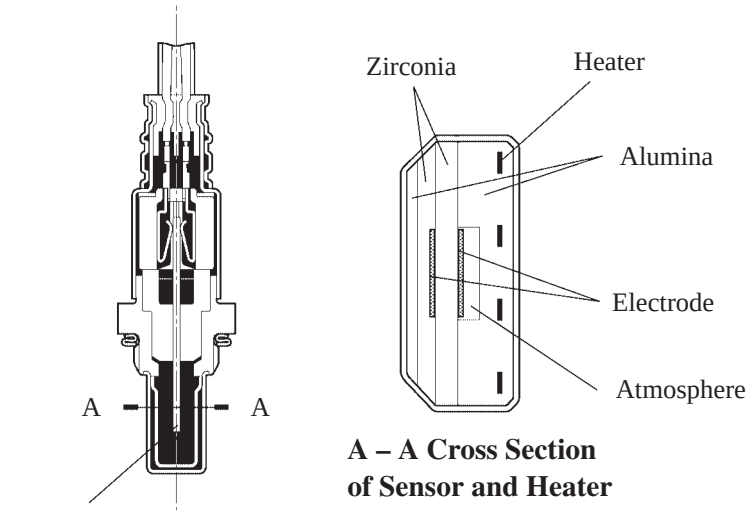

A – A Cross Section of Sensor and Heater

Air Fuel Ratio Sensor

238EG54

3) Knock Sensor (Flat Type)

a. General

In the conventional type knock sensor (resonant type), a vibration plate which has the same resonance point as the knocking frequency of the engine is built in and can detect the vibration in this frequency band.
On the other hand, a flat type knock sensor (non-resonant type) has the ability to detect vibration in a wider frequency band from about 6 kHz to 15 kHz, and has the following features.

- The engine knocking frequency will change a bit depending on the engine speed. The flat type knock sensor can detect the vibration even when the engine knocking frequency is changed. Thus the vibration detection ability is increased compared to the conventional type knock sensor, and a more precise ignition timing control is possible.

——— - ——— : Resonance Characteristic of Conventional Type

——————— : Resonance Characteristic of Flat Type

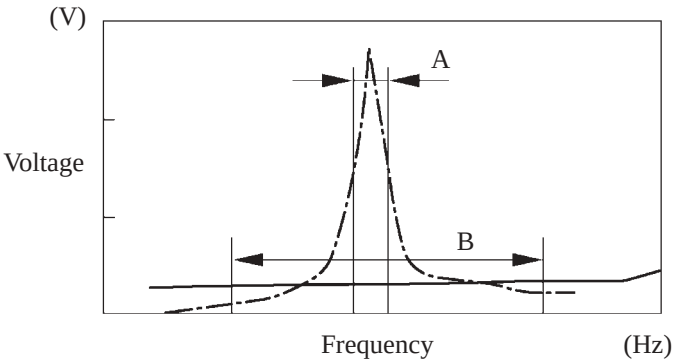

A: Detection Band of Conventional Type

B: Detection Band of Flat Type

Characteristic of Knock Sensor

214CE04

b. Construction

- The flat type knock sensor is installed on the engine through the stud bolt installed on the cylinder block. For this reason, a hole for the stud bolt is running through in the center of the sensor.
- Inside of the sensor, a steel weight is located on the upper portion and a piezoelectric element is located under the weight through the insulator.
- The open/short circuit detection resistor is integrated.

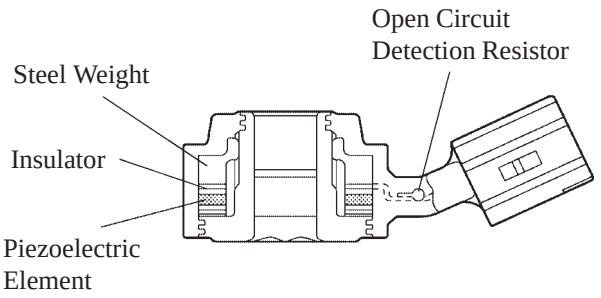

Flat Type Knock Sensor (Non-Resonant Type)

214CE01

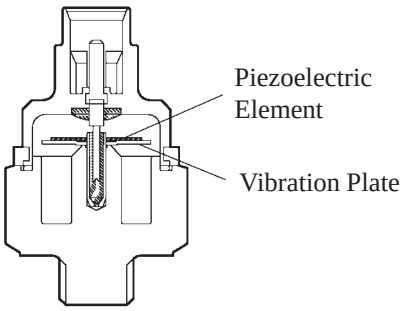

Conventional Type Knock Sensor (Resonant Type)

214CE02

c. Operation

The knocking vibration is transmitted to the steel weight and its inertia applies pressure to the piezoelectric element. The action generates electromotive force.

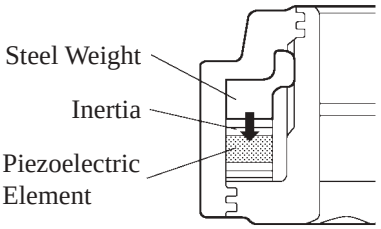

214CE08

d. Open/Short Circuit Detection Resistor

During the ignition is ON, the open/short circuit detection resistor in the knock sensor and the resistor in the engine ECU keep the voltage at the terminal KNK1 of engine constant.
An IC (Integrated Circuit) in the engine ECU is always monitoring the voltage of the terminal KNK1. If the open/short circuit occurs between the knock sensor and the engine ECU, the voltage of the terminal KNK1 will change and the engine ECU detects the open/short circuit and stores DTC (Diagnostic Trouble Code).

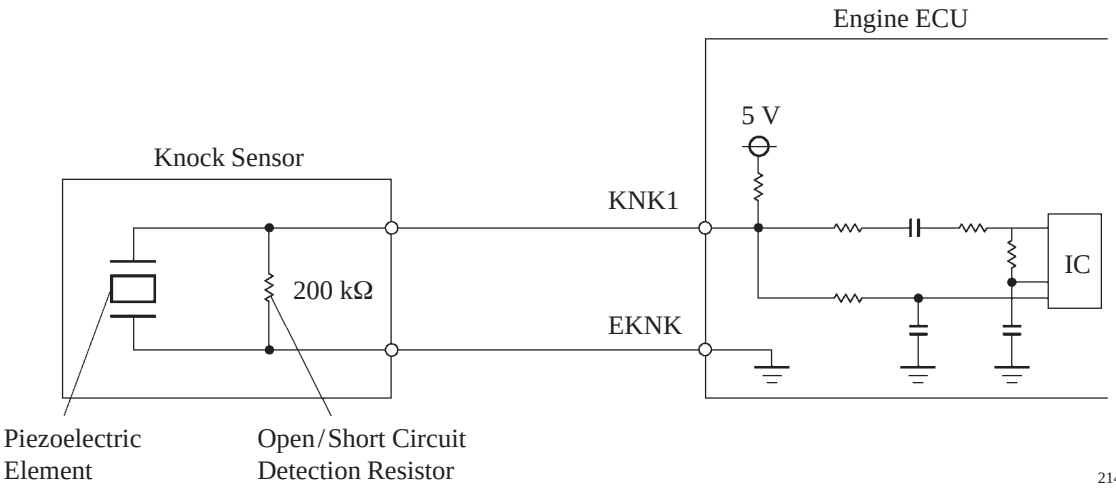

Service Tip

- In accordance with the adoption of open/short circuit detection resistor, the inspection method for the sensor has been changed.
- To prevent the water accumulation in the connector, make sure to install the flat type knock sensor in the position as illustration.

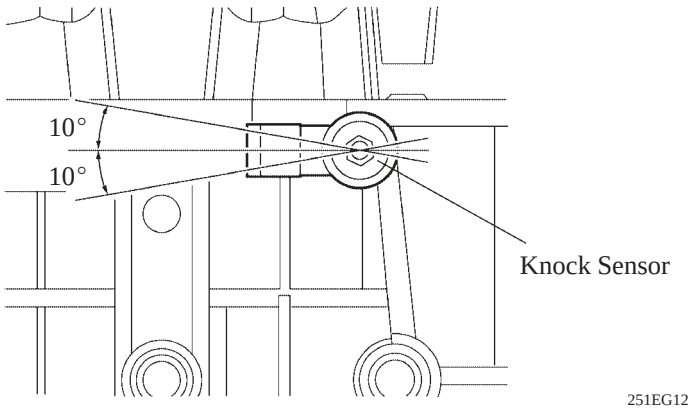

4) Accelerator Pedal Position Sensor

This sensor converts the accelerator pedal depressed angles into electric signals with two differing characteristics and outputs them to the engine ECU. One is the VPA1 signal that linearly outputs the voltage along the entire range of the accelerator pedal depressed angle. The other is the VPA2 signal that outputs on offset voltage.

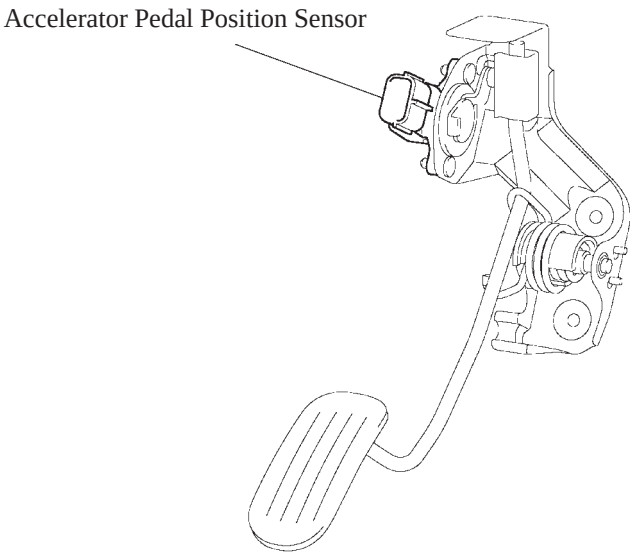

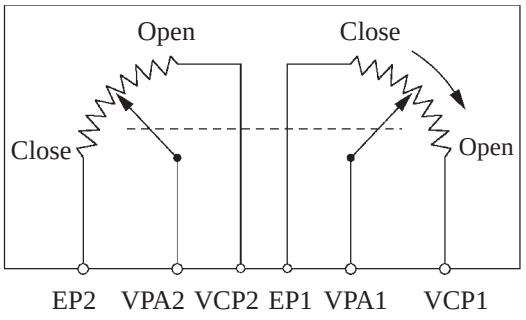

Accelerator Pedal Position Sensor

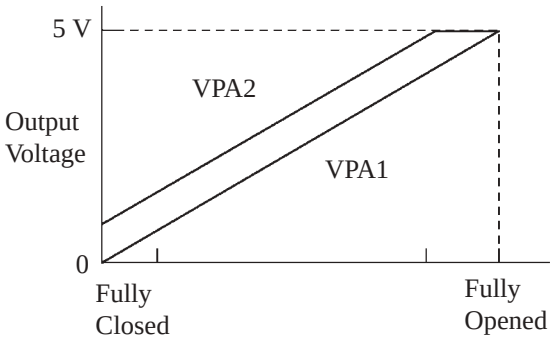

Accelerator Pedal Depressed Angle

258AS46

5) Throttle Position Sensor (Hall IC Type)

The throttle position sensor is mounted on the throttle body, to detect the opening angle of the throttle valve. The throttle position sensor converts the magnetic flux density that changes when the magnetic yoke (located on the same axis as the throttle shaft) rotates around the Hall IC into electric signals to operate the throttle control motor.

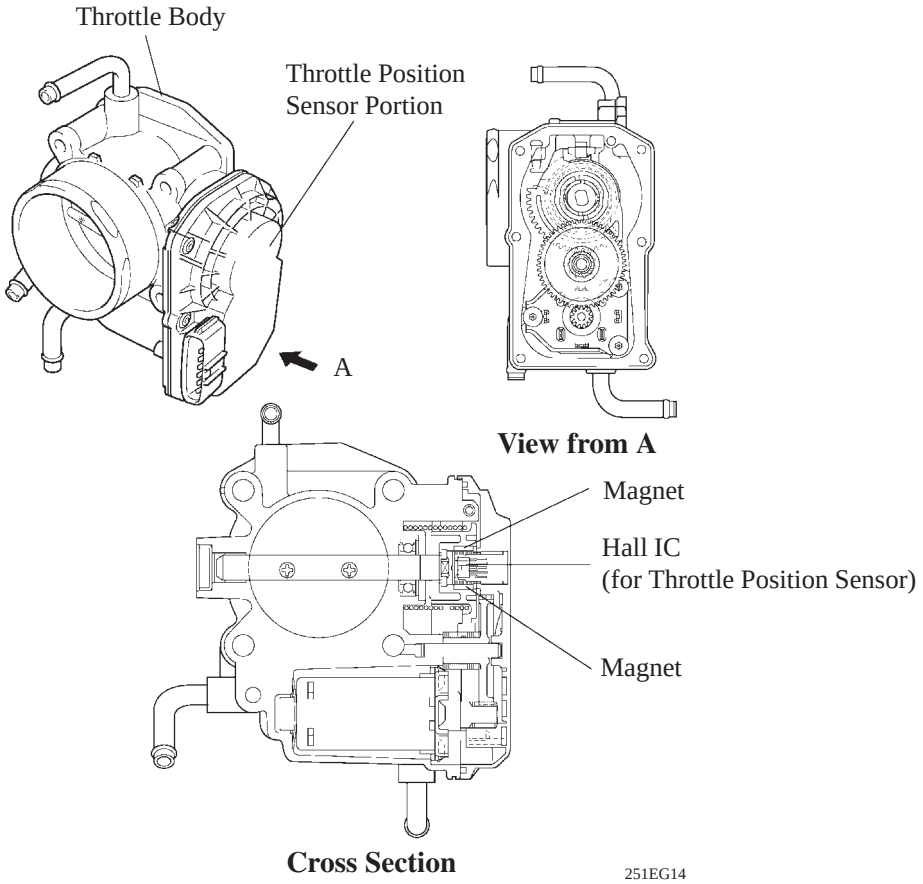

Throttle Position Sensor

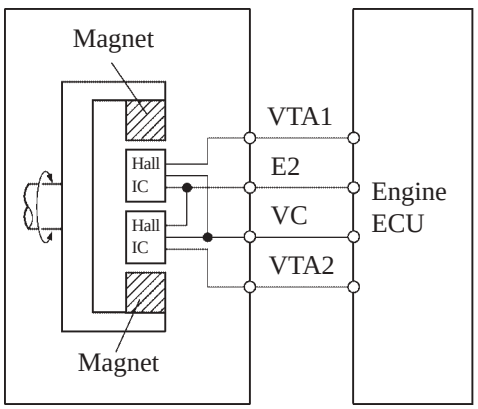

230LX12

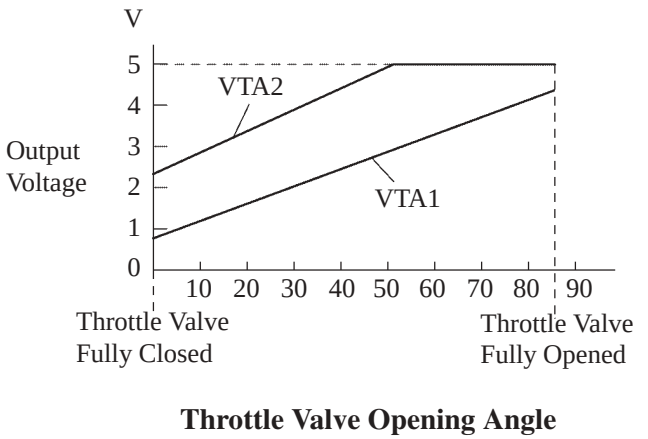

Throttle Valve Opening Angle

238EG79

Service Tip

The inspection method differs from the conventional throttle position sensor because this sensor uses a Hall IC.

ETCS-i (Electronic Throttle Control System-intelligent)

- The ETCS-i is used, providing excellent throttle control in all the operating ranges.
- In the conventional throttle body, the throttle valve opening in determined invariably by the amount of the accelerator pedal effort. In contrast, the ETCS-i uses the engine ECU to calculate the optimal throttle valve opening that is appropriate for the respective driving condition and uses a throttle control motor to control the opening.
- The contact type accelerator pedal position sensor has been adopted.
- The no-contact type throttle position sensor has been adopted.
- The ETCS-i controls the ISC (Idle Speed Control) system, the TRC (Traction Control) and the VSC (Vehicle Stability Control) system.
- In case of an abnormal condition, this system transfers to the limp mode.

▶ System Diagram ◀

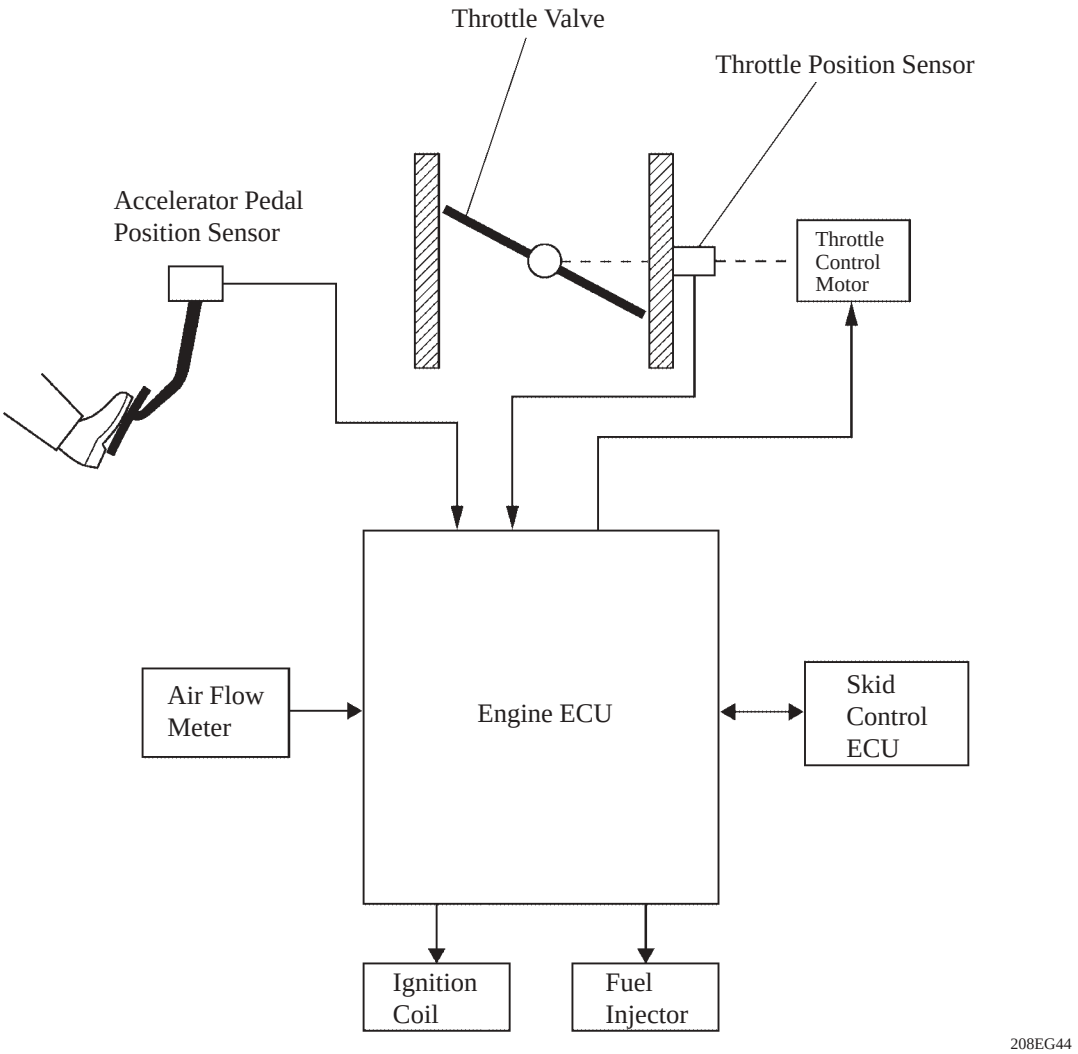

1) Construction

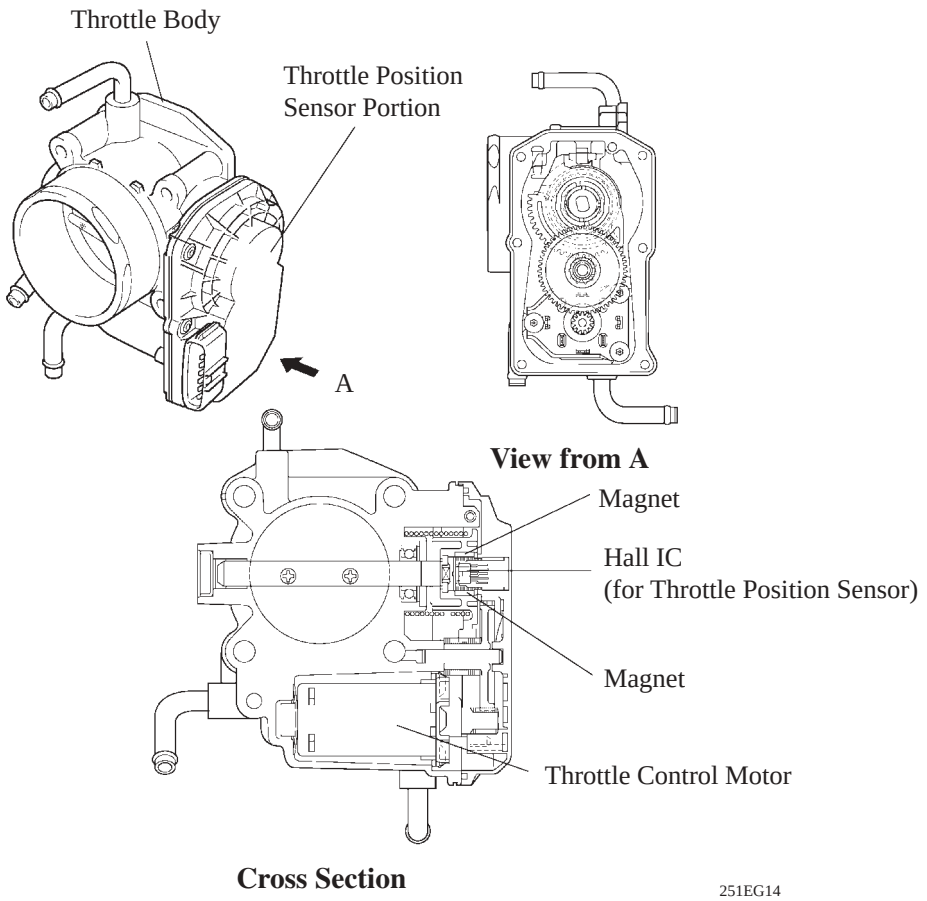

a. Throttle Position Sensor

The throttle position sensor is mounted on the throttle body to detect the opening angle of the throttle valve. For details, refer to Main Components of Engine Control System section on page 173.

b. Throttle Control Motor

A DC motor with excellent response and minimal power consumption is used for the throttle control motor. The engine ECU performs the duty ratio control of the direction and the amperage of the current that flows to the throttle control motor in order to regulate the opening of the throttle valve.

2) Operation

a. General

The engine ECU drives the throttle control motor by determining the target throttle valve opening in accordance with the respective operating condition.

1) Non-Linear Control

2) Idle Speed Control

3) TRC Throttle Control

4) VSC Coordination Control

5) Cruise Control

b. Non-Linear Control

Controls the throttle to an optimal throttle valve opening that is appropriate for the driving condition such as the amount of the accelerator pedal effort and the engine speed in order to realize an excellent throttle control and comfort in all operating ranges.

▶ Control Examples During Acceleration and Deceleration ◀

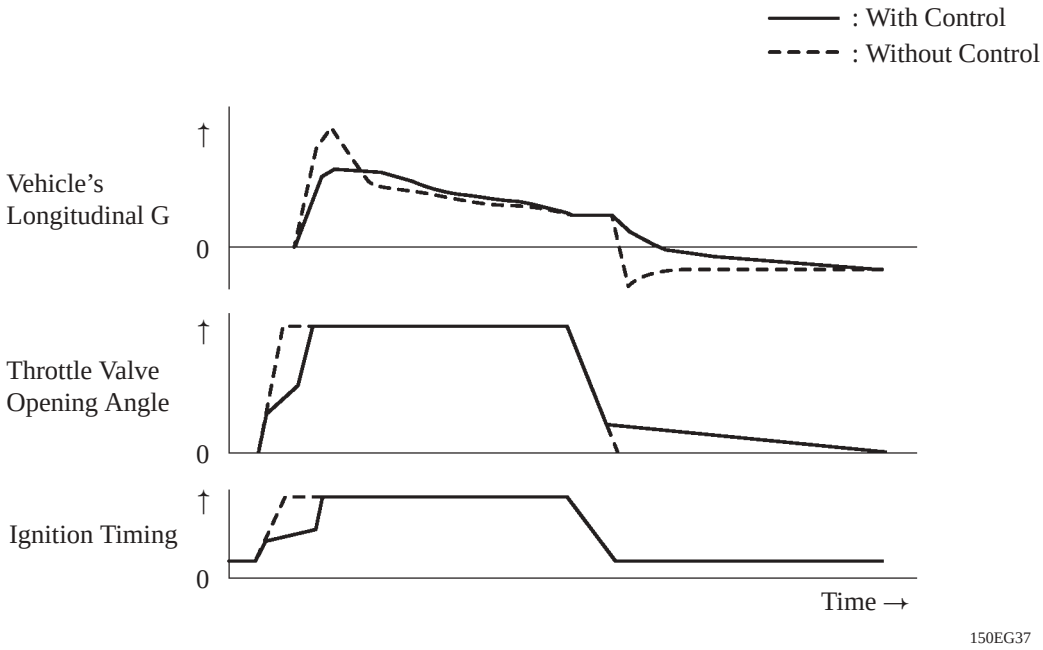

c. Idle Speed Control

The engine ECU controls the throttle valve in order to constantly maintain an ideal idle speed.

d. TRC Throttle Control

As part of the TRC system, the throttle valve is closed by a demand signal from the skid control ECU if an excessive amount of slippage is created at a driving wheel, thus facilitating the vehicle in providing excellent stability and driving force.

e. VSC Coordination Control

In order to bring the effectiveness of the VSC system control into full play, the throttle valve opening angle is controlled by effecting a coordination control with the skid control ECU.

f. Cruise Control

An engine ECU with an integrated cruise control ECU directly actuates the throttle valve for operation of the cruise control.

Fail-Safe of Accelerator Pedal Position Sensor

- The accelerator pedal position sensor comprises two (main, sub) sensor circuits. If a malfunction occurs in either one of the sensor circuits, the engine ECU detects the abnormal signal voltage difference between these two sensor circuits, and switches to the limp mode. In the limp mode, the remaining circuit is used to calculate the accelerator pedal opening, in order to operate the vehicle under limp mode control.

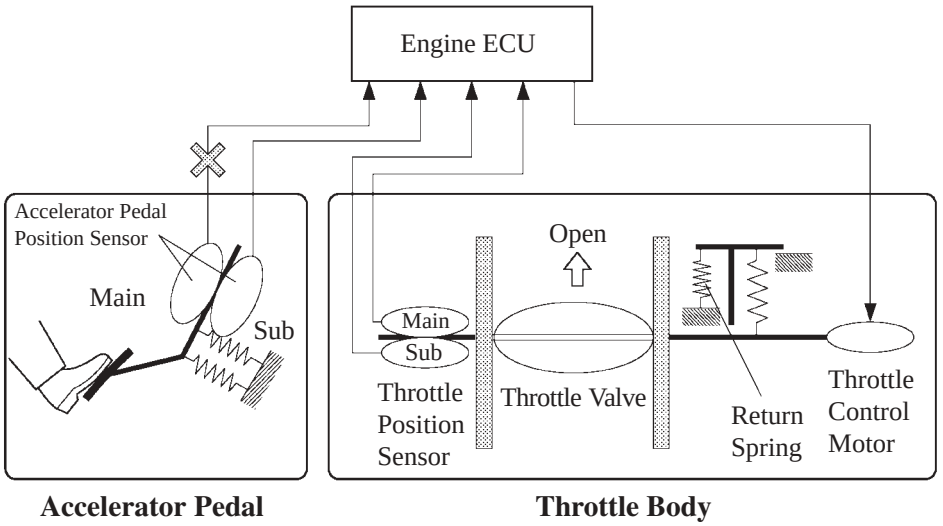

- When both circuits malfunction, the engine ECU detects the abnormal signal voltage from these two sensor circuits, and discontinues the throttle control. At this time, the vehicle can be driven within its idling range.

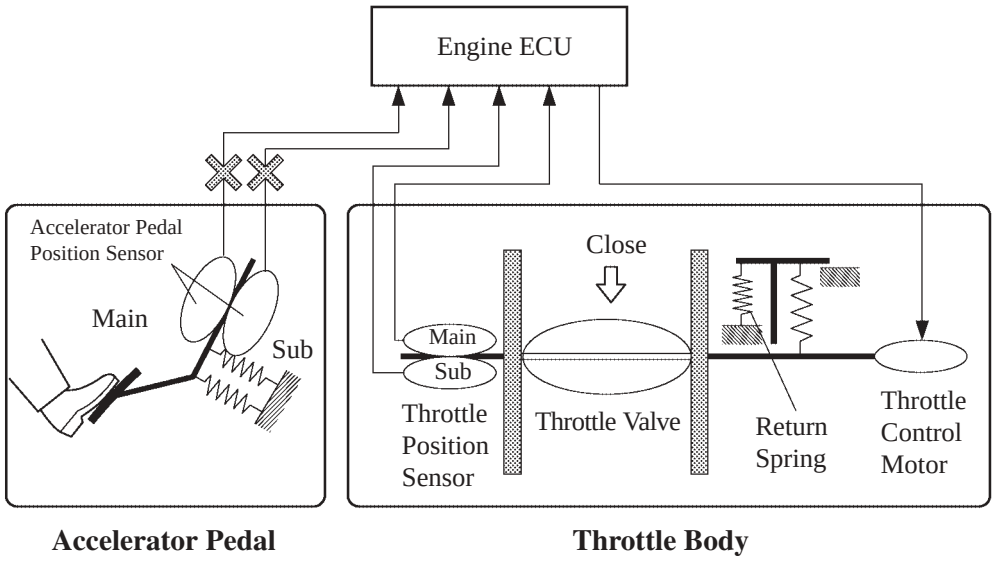

Fail-Safe of Throttle Position Sensor

- The throttle position sensor comprises two (main, sub) sensor circuits. If a malfunction occurs in either one of the sensor circuits, the engine ECU detects the abnormal signal voltage difference between these two sensor circuits, cuts off the current to the throttle control motor, and switches to the limp mode. Then, the force of the return spring causes the throttle valve to return and stay at the prescribed opening. At this time, the vehicle can be driven in the limp mode while the engine output is regulated through the control of the fuel injection and ignition timing in accordance with the accelerator opening.
- The same control as above is effected if the engine ECU detects a malfunction in the throttle control motor system.

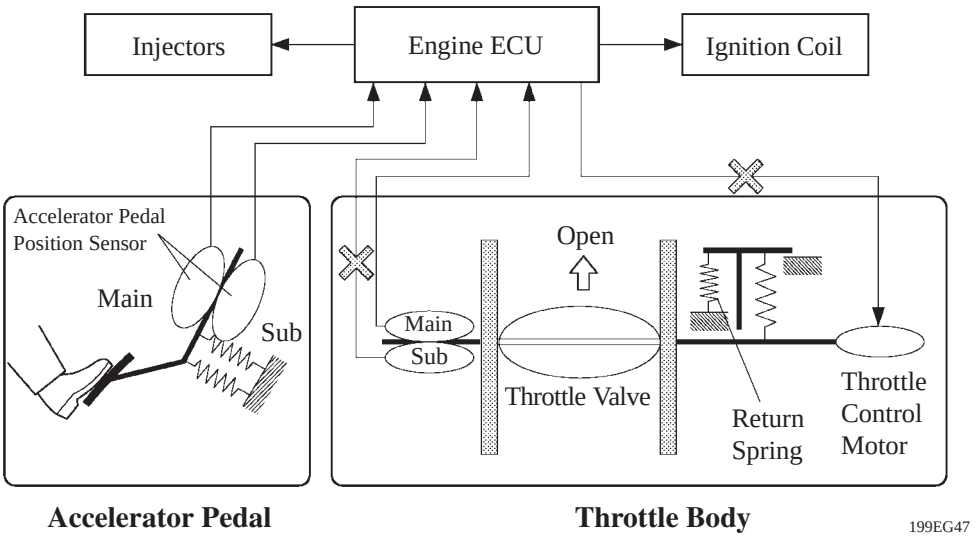

Diagnosis

- When the engine ECU detects a malfunction, the engine ECU makes a diagnosis and memorizes the failed section.
  Furthermore, the engine warning light in the combination meter illuminates or blinks to inform the driver.
- The engine ECU will also store the DTCs (Diagnostic Trouble Codes) of the malfunctions.
- The DTCs can be accessed the use of the hand-held tester.
- All the DTCs have been made to correspond to the SAE controlled codes. Some of the DTCs have been further divided into smaller detection areas than in the past, and new DTCs have been assigned to them. For details, refer to the Avensis Verso Repair Manual (Pub. No. RM1032E).

Service Tip

To clear the DTC that is stored in the engine ECU, use a hand-held tester or disconnect the battery terminal or remove the EFI fuse for 1 minute or longer.

Fail-Safe

When the engine ECU detects a malfunction, the engine ECU stops or controls the engine according to the data already stored in the memory.

▶ Fail-Safe Chart ◀

DTC No.	Fail-Safe Operation	Fail-Safe Deactivation Conditions
P0031, P0032, P0037, P0038,	The heater circuit in which the abnormality is detected is turned off.	Ignition switch OFF.
P0100, P0102, P0103	Ignition timing is calculated from engine speed and a throttle angle.	Return to normal condition.
P0110, P0112, P0113	Intake air temp. is fixed at 20°C (68°F).	Return to normal condition.
P0115, P0117, P0118	Water temp. is fixed at 80°C (176°F).	Return to normal condition.
P0120, P0122, P0123, P0220, P0222, P0223, P2135	Fuel cut intermittently when idle.	Return to normal condition and ignition switch OFF.
P0325, P0327, P0328	Max. timing retardation.	Ignition switch OFF.
P0351, P0352, P0353, P0354	Fuel cut.	Return to normal condition.
P0604, P0606, P0607, P0657	Fuel cut intermittently when idle.	Return to normal condition and ignition switch OFF.
P2102, P2103	Fuel cut intermittently when idle.	Return to normal condition and ignition switch OFF.
P2111, P2112	Fuel cut intermittently when idle.	Return to normal condition and ignition switch OFF.
P2118, P2119	Fuel cut intermittently when idle.	Return to normal condition and ignition switch OFF.

■2AZ-FE ENGINE

1. General

- The 1AZ-FE engine has been discontinued and the 2AZ-FE engine has been introduced on the model for Australia.
- The 2AZ-FE engine is an in-line, 4-cylinder, 2.4-liter, and 16-valve DOHC engine in which the bore and stroke have been increased from the 1AZ-FE engine.
- This engine has following features that have been adapted in order to realize the further improvement of the engine performance, fuel economy, and to reducing exhaust emissions.
  - – Meets the STEP II regulation requirements.
  - – ETCS-i (Electronic Throttle Control System-intelligent) has been adopted.

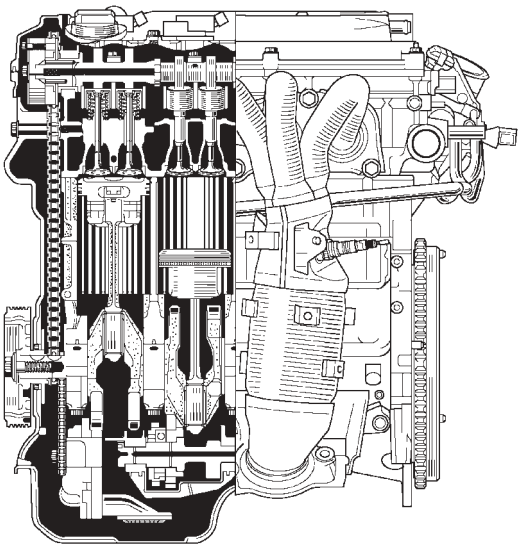

258AS63

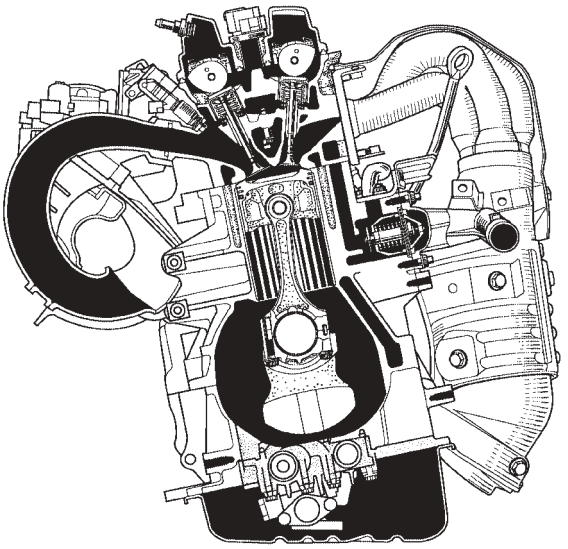

258AS64

▶ Engine Specifications ◀

Engine Type		2AZ-FE	1AZ-FE
No. of Cyls. & Arrangement		4-Cylinder, In-line	←
Valve Mechanism		16-Valve DOHC, Chain Drive (with VVT-i)	←
Combustion Chamber		Pentroof Type	←
Manifolds		Cross-Flow	←
Fuel System		EFI	←
Displacement	cm^3 (cu. in.)	2362 (144.2)	1998 (121.9)
Bore x Stroke	mm (in.)	88.5 x 96.0 (3.48 x 3.78)	86.0 x 86.0 (3.39 x 3.39)
Compression Ratio		9.6 : 1	9.8 : 1
Max. Output	(EEC)	115 kW @ 5700 rpm	110 kW@ 6000 rpm
Max. Torque	(EEC)	221 N·m @ 4000 rpm	192 N·m @ 4000 rpm
Oil Grade		API SJ, SL, EC or ILSAC	API SJ, EC or ILSAC

▶ Valve Timing ◀

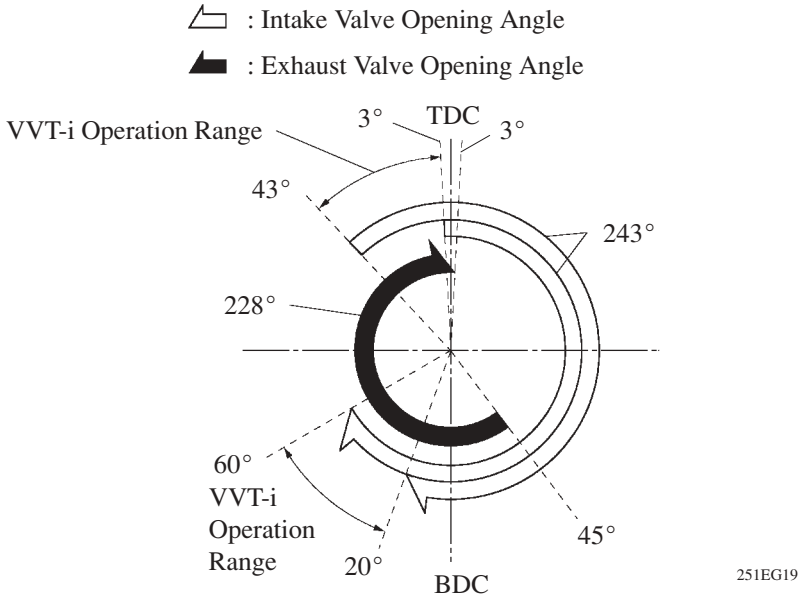

2. Feature of 2AZ-FE Engine

The 2AZ-FE engine has been able to achieve the following performance through the adoption of the item listed below.

(1) High performance and fuel economy

(2) Low noise and vibration

(3) Lightweight and compact design

(4) Good serviceability

(5) Clean emission

Item	(1)	(2)	(3)	(4)	(5)
The VVT-i system is used.	○				○
The ETCS-i has been adopted.	○				
A cylinder block made of aluminum alloy along with a magnesium head cover has been adopted.			○		
The taper squish shape has been adopted for the piston head.	○				○
The DIS (Direct Ignition System) makes ignition timing adjustment unnecessary.	○			○	○
A serpentine belt drive system has been adopted, and the brackets and the engine have been integrated.			○	○	
Timing chain has been used.			○	○	
The fuel returnless system has been adopted.			○	○	○
Quick connectors are used to connect the fuel hose with the fuel pipes.				○	
12-hole type fuel injectors with high atomizing performance have been adopted.	○				○
Iridium-tipped spark plugs have been adopted.	○			○	
Intake manifold made of plastic has been adopted.			○		
The ceramic type TWC (Three-Way Catalytic Converter) has been adopted.					○
A resin gear balance shaft has been adopted.		○	○		

3. Major Difference

The major difference between the 2AZ-FE engine on the new Avensis Verso and the 1AZ-FE engine on the previous Avensis Verso are the following:

System		Features
Engine Proper	Cylinder Block	● The cylinder bore has been changed.
	Piston	● The piston diameter has been increased.
	Crankshaft	● The balance shaft drive gear has been installed onto the crankshaft. ● A balance shaft has been adopted.
Valve Mechanism		● The cam profile has been changed in conjunction with the change in the valve timing.
Cooling System		● The TOYOTA genuine Super Long Life Coolant (SLLC) has been adopted.
Intake and Exhaust system		● An electronic throttle body with a built-in no-contact type throttle position sensor and a throttle control motor has been adopted. ● The exhaust system has been revised to optimize exhaust performance. In addition, the 2 TWCs located directly below the exhaust manifold have been integrated into 1 TWC, and a TWC has been added under the floor. ● The ceramic type TWC has been adopted directly below the exhaust manifold and under floor.
Fuel System		● The 12-hole type injector has been adopted.
Charging System		● The segment conductor type alternator has been adopted.
Engine Control System		● The ETCS-i (Electronic Throttle Control system-intelligent) has been adopted. ● A flat type knock sensor has been adopted. ● The air fuel ratio sensor has been discontinued and two oxygen sensor has been adopted. ● A contact type accelerator pedal position sensor has been adopted. ● A no-contact type throttle position sensor has been adopted. ● The charging control has been adopted.
Diagnosis		● Along with the adoption of the ETCS-i, the DTCs (Diagnostic Trouble Codes) have been added.

4. Engine Proper

Cylinder Head Cover

- A lightweight magnesium alloy diecast cylinder head cover is used.
- The cylinder head cover gasket and the spark plug gasket have been integrated to reduce the number of parts.

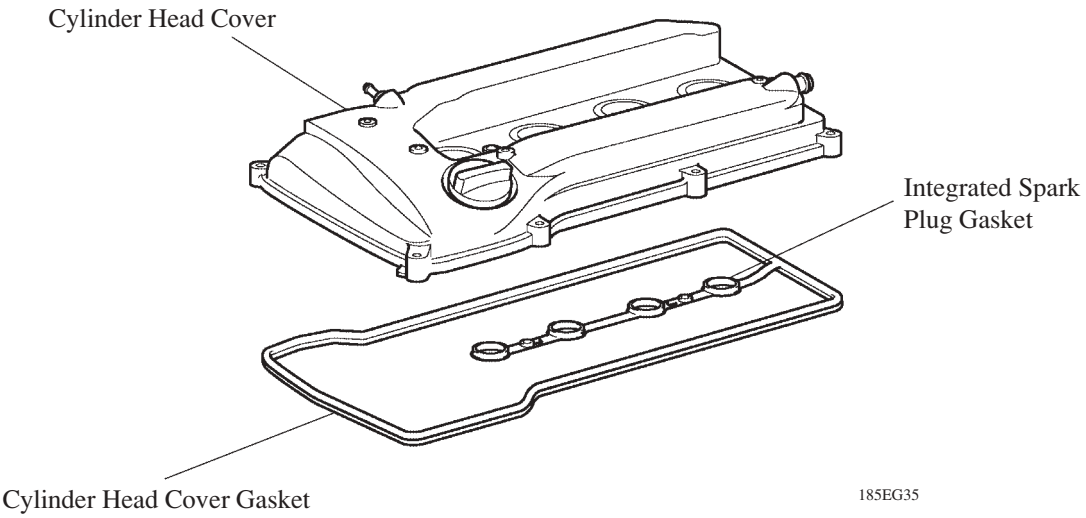

Cylinder Head Gasket

- A steel-laminate type cylinder head gasket has been adopted.

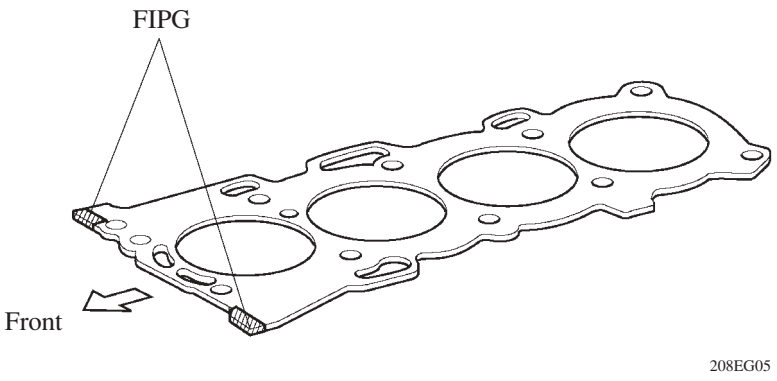

Cylinder Head

- The taper squish combustion chamber has been used to realize the highly engine's knocking resistance and fuel efficiency.
- An upright intake port has been used to realize the highly intake efficiency.
- Installing the injectors in the cylinder head enables the injectors inject fuel as close as possible to the combustion chamber. This prevents the fuel from adhering to the intake port walls, which reduces HC exhaust emissions.
- The routing of the water bypass jacket in the cylinder head has been optimized to realize the highly cooling performance. In addition, a water bypass passage has been provided bellow the exhaust ports to reduce the number of parts and to achieve weight reduction.

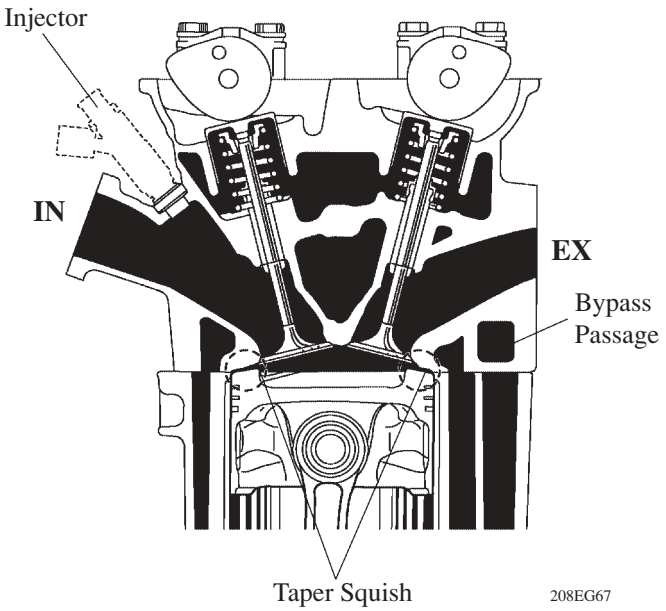

A – A Cross Section

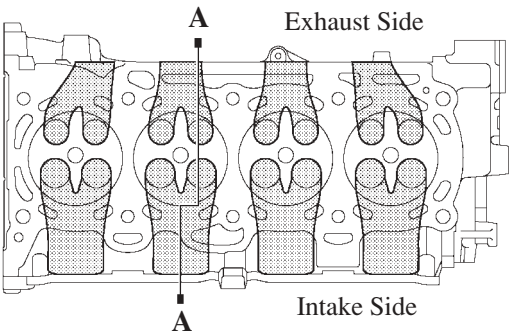

View from the Back Side

Cylinder Block

- Lightweight aluminum alloy is used for the cylinder block.
- By producing the thin cast-iron liners and aluminum alloy cylinder block as a unit to realize the compact design. The liner is thin, so that boring is not possible.
- Passage holes are provided in the bulkhead of the cylinder block. As a result, the air at the bottom of the cylinder flows smoother, and pumping loss (back pressure at the bottom of the piston generated by the piston's reciprocal movement) is reduced.
- The oil filter and the air conditioner compressor bracket are integrated the crankcase, also the water pump swirl camber, the thermostat housing and the rear oil seal retainer integrated the cylinder block.

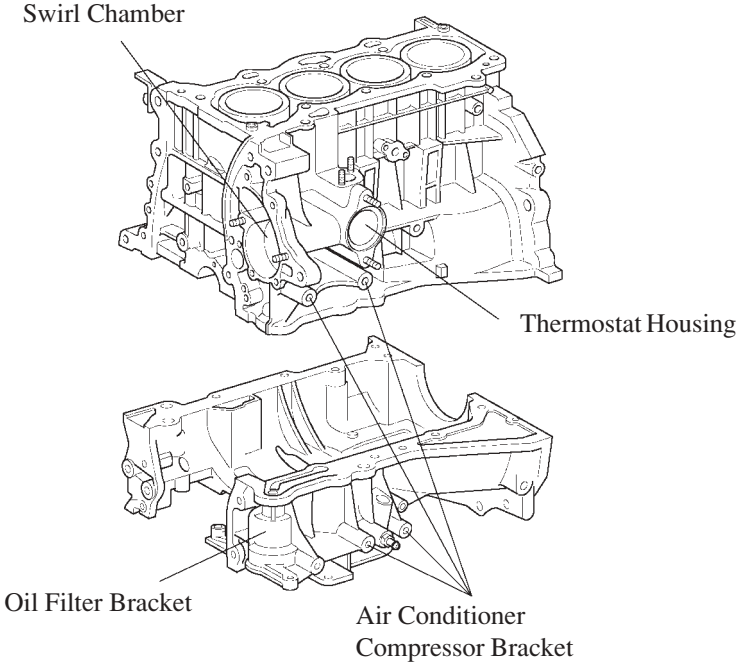

185EG42

▶ Air Flow During Engine Revolution ◀

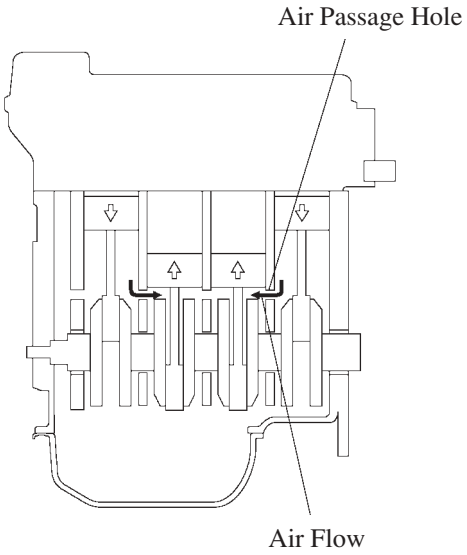

179EG04

Piston

- The piston is made of aluminum alloy and skirt area is made compact and lightweight.
- The piston head portion has adopted a taper squish shape.
- The piston skirt has been coated with resin.
- Full floating type piston pins are used.
- By increasing the machining precision of the cylinder bore diameter, the outer diameter of the piston has been made into one type.

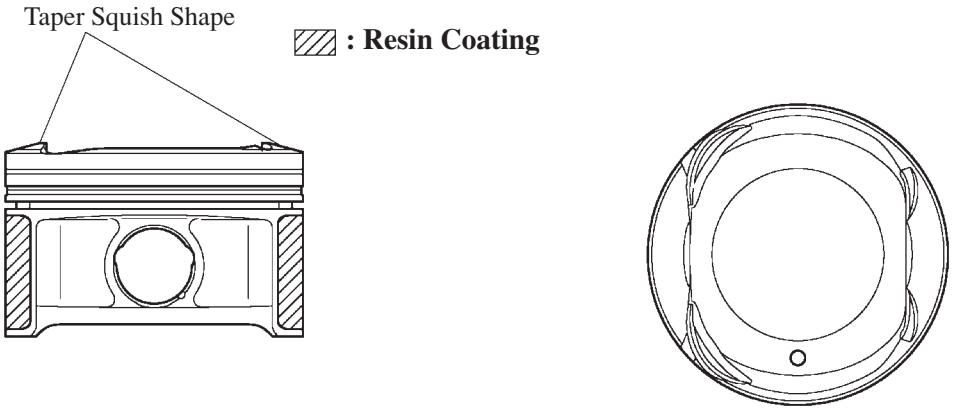

208EG06

Connecting Rod

- The connecting rods and caps are made of high strength steel for weight reduction.
- Nutless-type plastic region tightening bolts of the connecting rod are adopted for a lighter design.

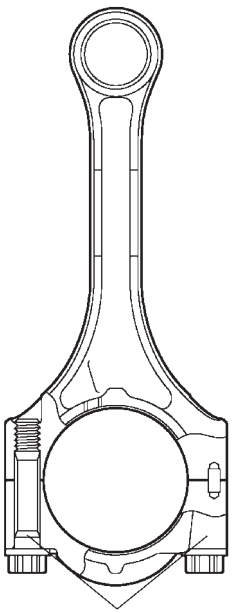

Plastic Region Tightening Bolts 208EG61

Crankshaft

- The crankshaft has 5 journals and 8 balance weights.
- The precision and surface roughnesses of the pins and journal have been realized to reduce frictional less.
- The balance shaft drive gear has been installed onto the crankshaft.
- The crankshaft is made of forged steel.

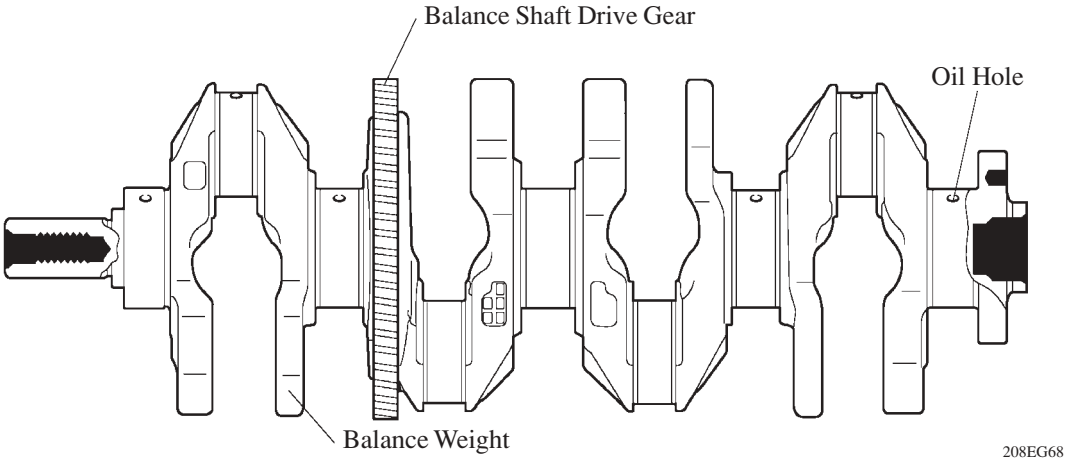

Balance Shaft

- A balance shaft has been adopted to reduce vibrations.
- A direct-drive system has been adopted which makes use of gear that is installed onto the counterweight of crankshaft.
- In addition, a resin gear has been adopted on the driven side to suppress noise and offer lightweight design.

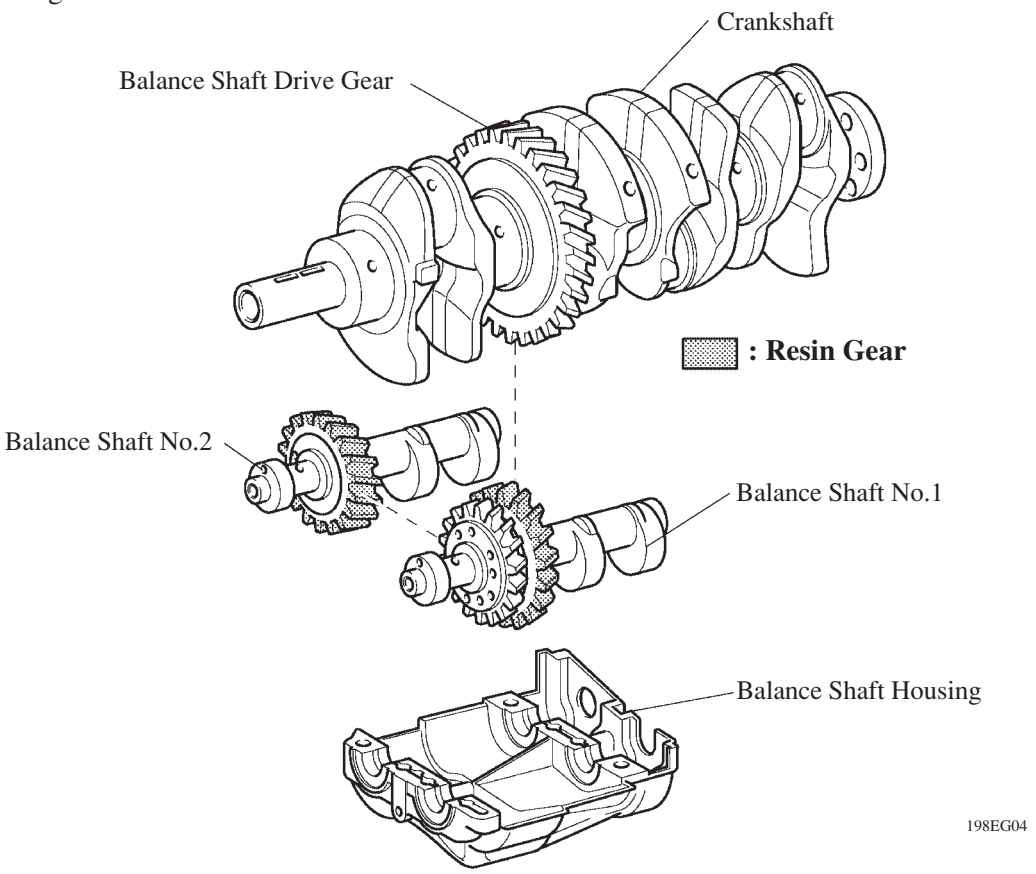

5. Valve Mechanism

General

- Each cylinder is equipped with 2 intake valves and 2 exhaust valves. Intake and exhaust efficiency has been increased due to the larger total port areas.
- The valves are directly opened and closed by 2 camshafts.
- The intake and exhaust camshafts are driven by the chain. The VVT-i system used for the intake camshaft is used to realize highly fuel economy, engine performance and reduce exhaust emissions. For details, see page 212 in the VVT-i system section.
- The shimless type valve lifter is used.

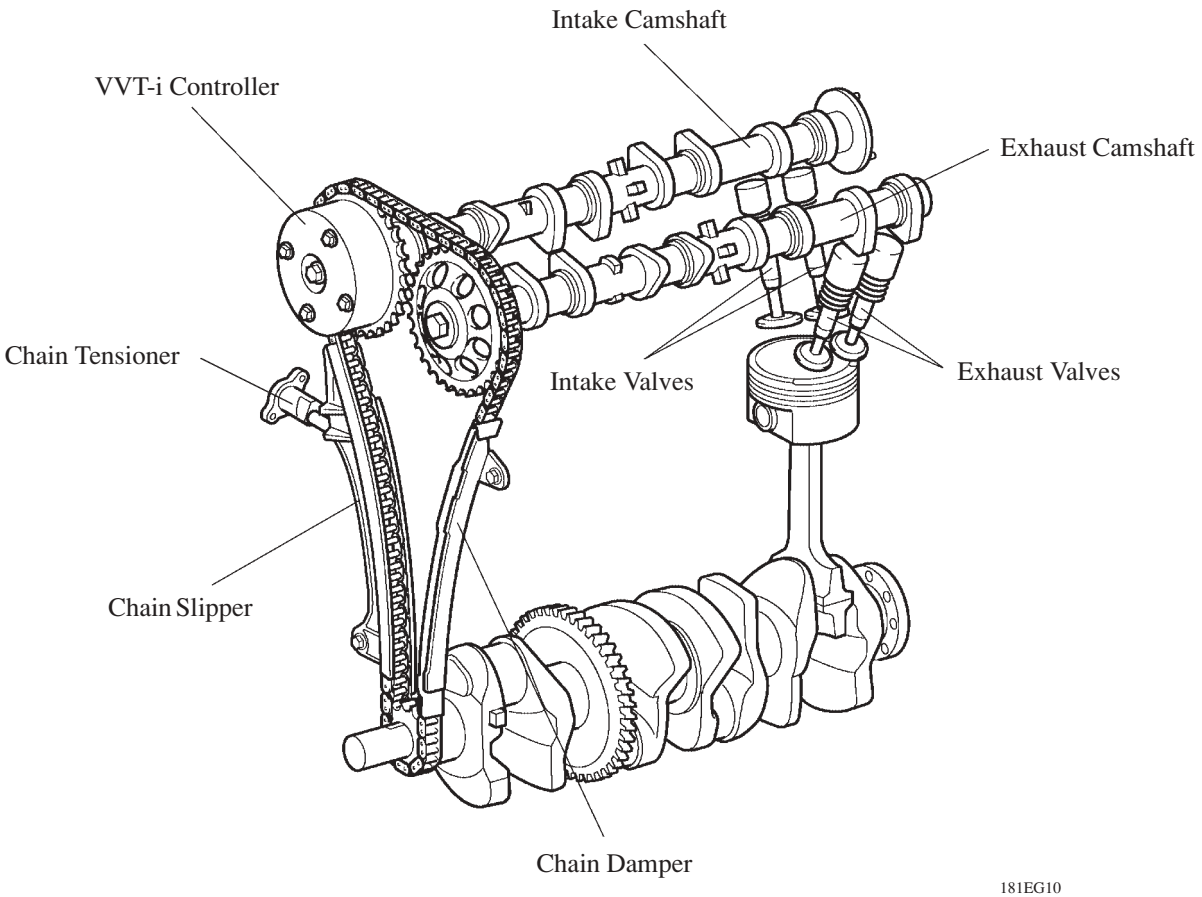

Camshaft

- The intake camshaft is provided with timing rotor to trigger the camshaft position sensor.
- In conjunction with the adoption of the VVT-i system, an oil passage is provided in the intake camshaft in order to supply engine oil pressure to the VVT-i system.
- A VVT-i controller has been installed on the front of the intake camshaft to vary the timing of the intake valves.

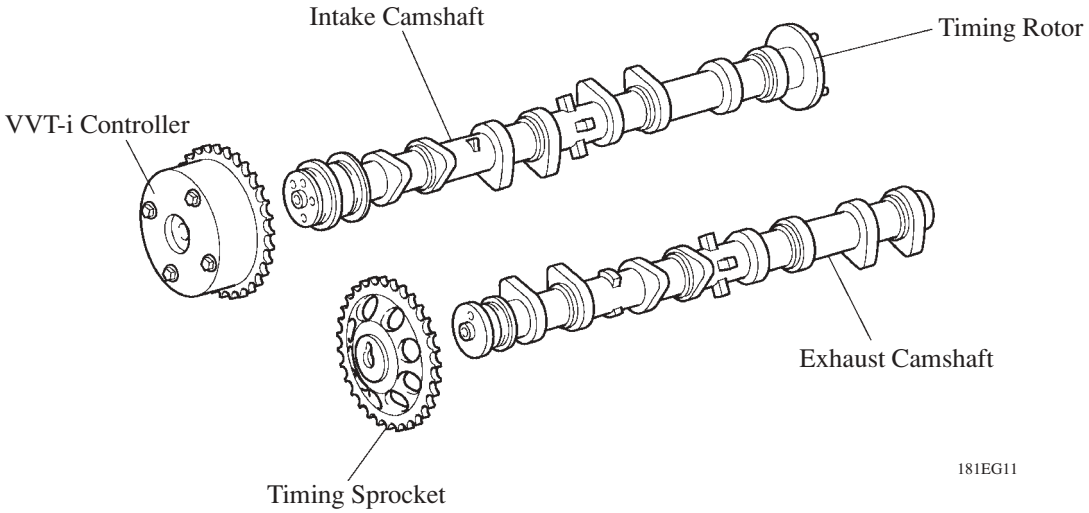

Intake and Exhaust Valves

- Intake and exhaust valves with large-diameter valve face have been adopted to improve the intake air and exhaust gas flow.
- Narrow valves stems have been adopted to reduce the intake and exhaust resistance and for weight reduction.

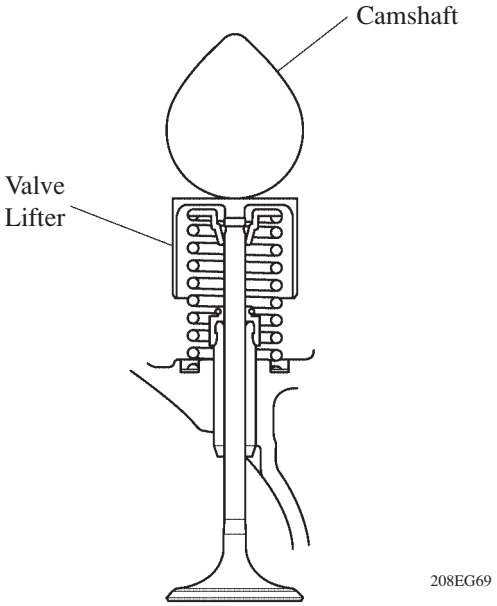

- Along with the increased amount of valve lift, shimless valve lifters that provided a large cam contact surface have been adopted. The adjustment of the valve clearance is accomplished by selecting and replacing the appropriate valve lifters.

Service Tip

The valve lifters are available in 35 size increment of 0.020 mm (0.008 in.), from 5.60 mm (0.199 in.) to 5.740 mm (0.266 in.).

Timing Chain

- A roller chain with 8 mm pitch has been adopted.
- The timing chain is lubricated by oil jet.

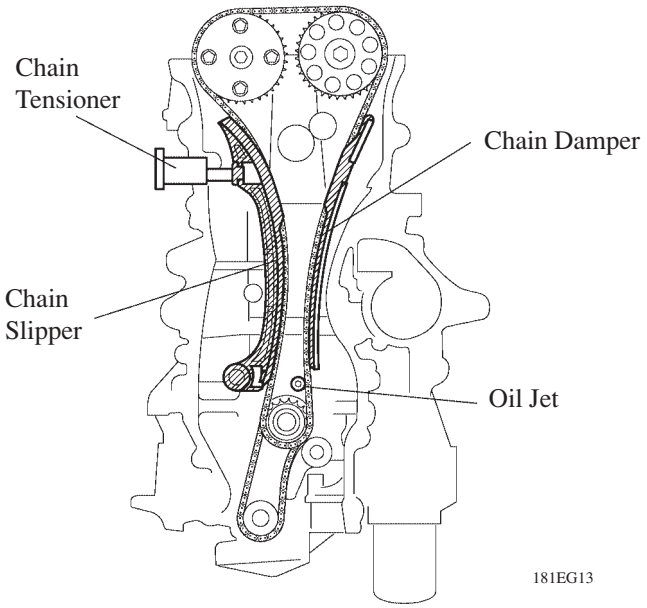

Chain Tensioner

- The chain tensioner uses a spring and oil pressure to maintain proper chain tension at all time. The chain tensioner suppresses noise generated by the chain. A ratchet type non-return mechanism is also used.
- To improve serviceability, the chain tensioner is constructed so that it can be removed and installed from the outside of the timing chain cover.

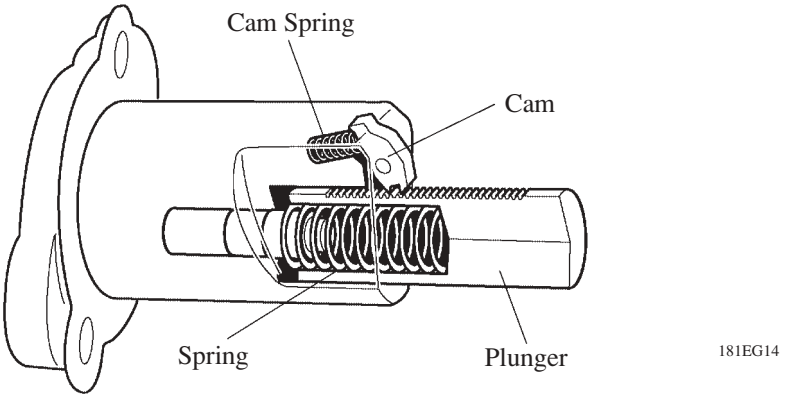

6. Lubrication System

General

- The lubrication circuit is fully pressurized and oil passes through an oil filter.
- The trochoidal type oil pump is chain-driven by the crankshaft.
- The oil filter is attached downward from the crankcase to improve serviceability.
- Along with the adoption of the VVT-i system, the cylinder head is provided with a VVT-i controller and a camshaft timing oil control valve. This system is operated by the engine oil.

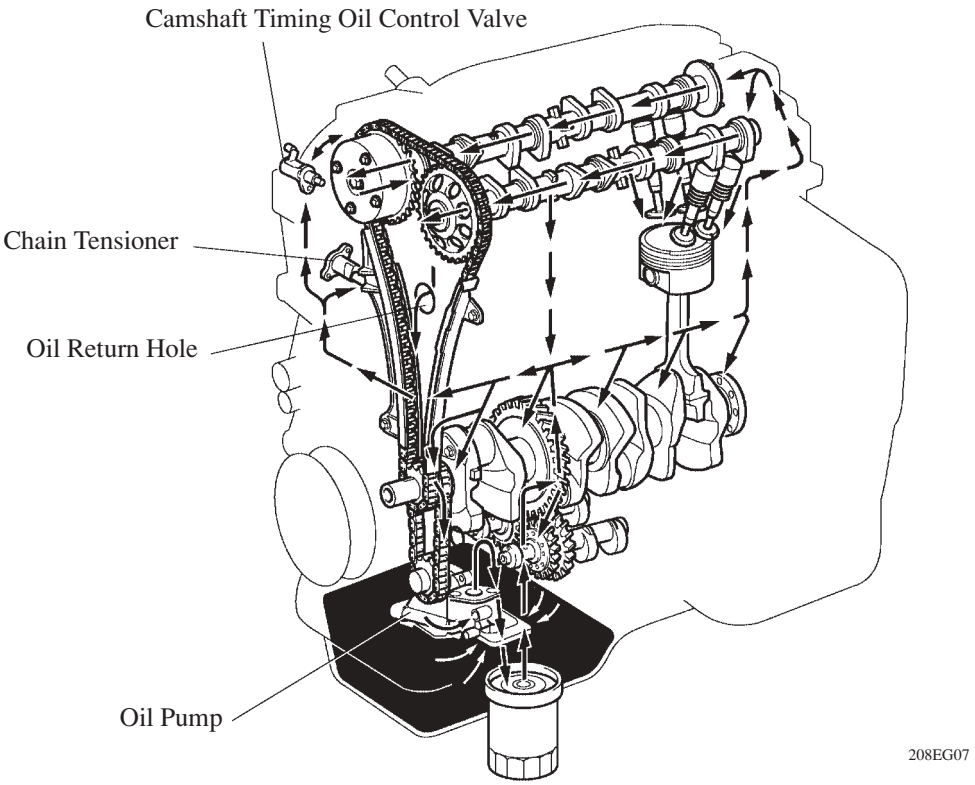

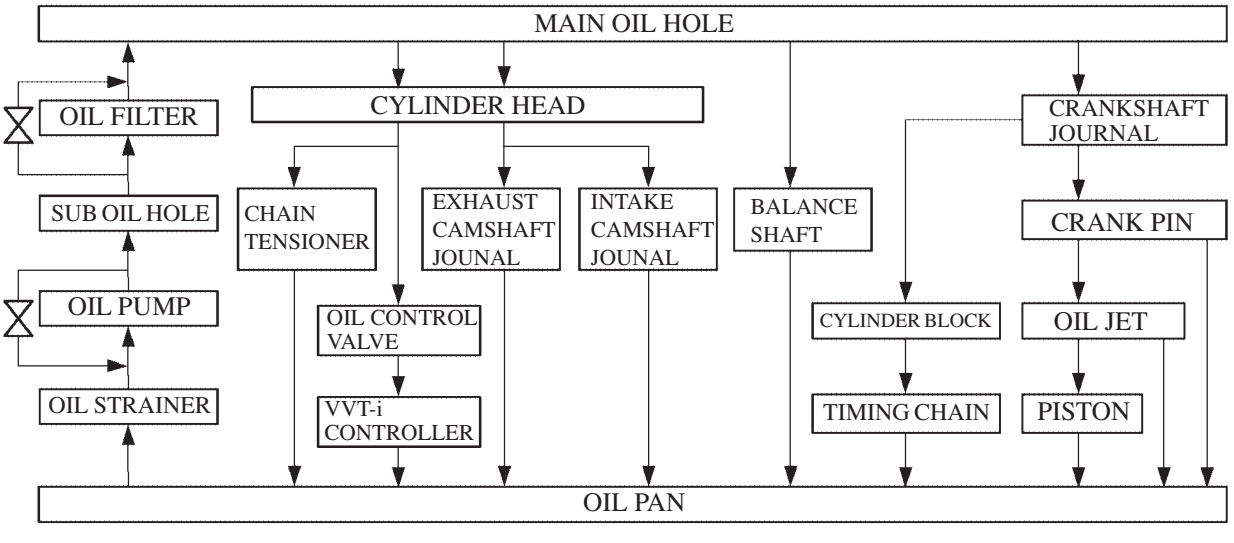

▶ Specifications ◀

Oil Capacity	Dry	4.5 liters (4.8 US qts, 4.0 Imp. qts)
	with Oil Filter	3.8 liters (4.0 US qts, 3.3 Imp. qts)
	without Oil Filter	3.6 liters (3.8 US qts, 3.2 Imp. qts)

Oil Pump

- The trochoidal type oil pump is chain driven by the crankshaft, and fits compactly inside the timing chain cover.
- Friction has been reduced by means of 2 relief holes in the internal relief system.

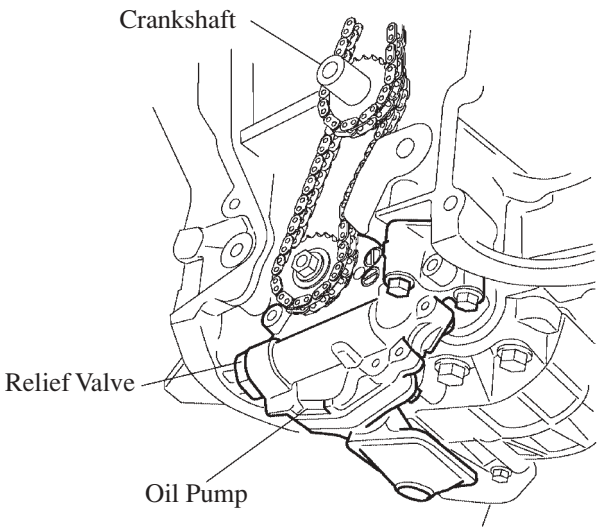

181EG43

7. Cooling System

- The cooling system is a pressurized, forced-circulation type.
- A thermostat with a bypass valve is located on the water inlet housing to maintain suitable temperature distribution in the cooling system. This prevents sudden jumps in temperature while the engine is warming up.
- The flow of the engine coolant makes a U-turn in the cylinder block to ensure a smooth flow of the engine coolant. In addition, a bypass passage is enclosed in the cylinder head and the cylinder block.
- Warm water from the engine is sent to the throttle body to prevent freeze-up.

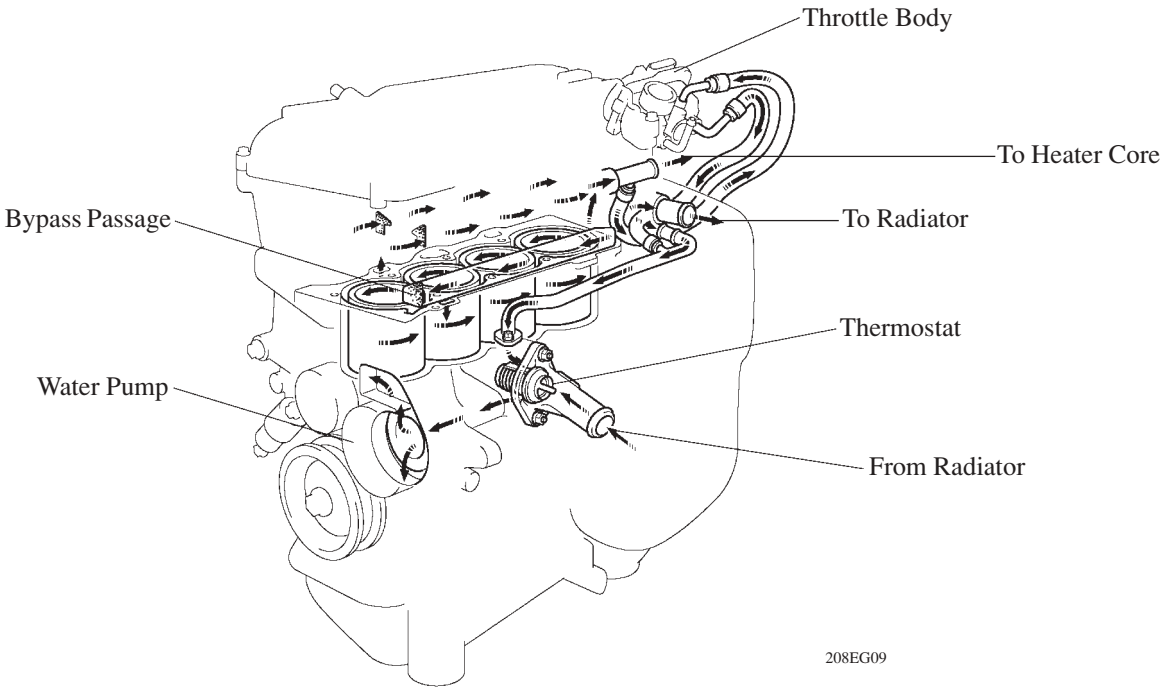

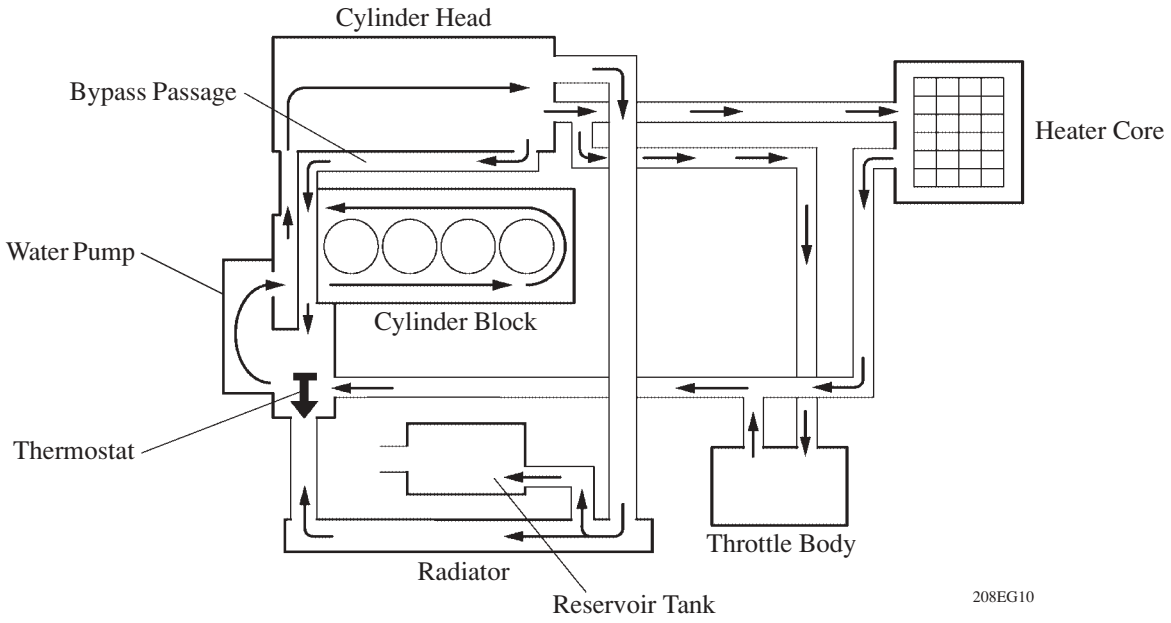

▶ **Specifications** ◀

Engine Coolant	Capacity liters (US qts, Imp. qts)	6.2 (6.6, 5.5)
	Type	The TOYOTA Super Long Life Coolant (SLLC) or Equivalent
Thermostat	Opening Temperature °C (°F)	80 – 84 (176 – 183)

Super Long Life Coolant

The TOYOTA genuine Super Long Life Coolant (SLLC) has been adopted. As a result, the maintenance interval has been extended. For details, see page 157.

8. Intake and Exhaust System

The adoption of ETCS-i (Electronic Throttle Control System-intelligent) has realized excellent throttle control.

- The intake manifold has been made of plastic to reduce the weight and the amount of heat transferred from the cylinder head.

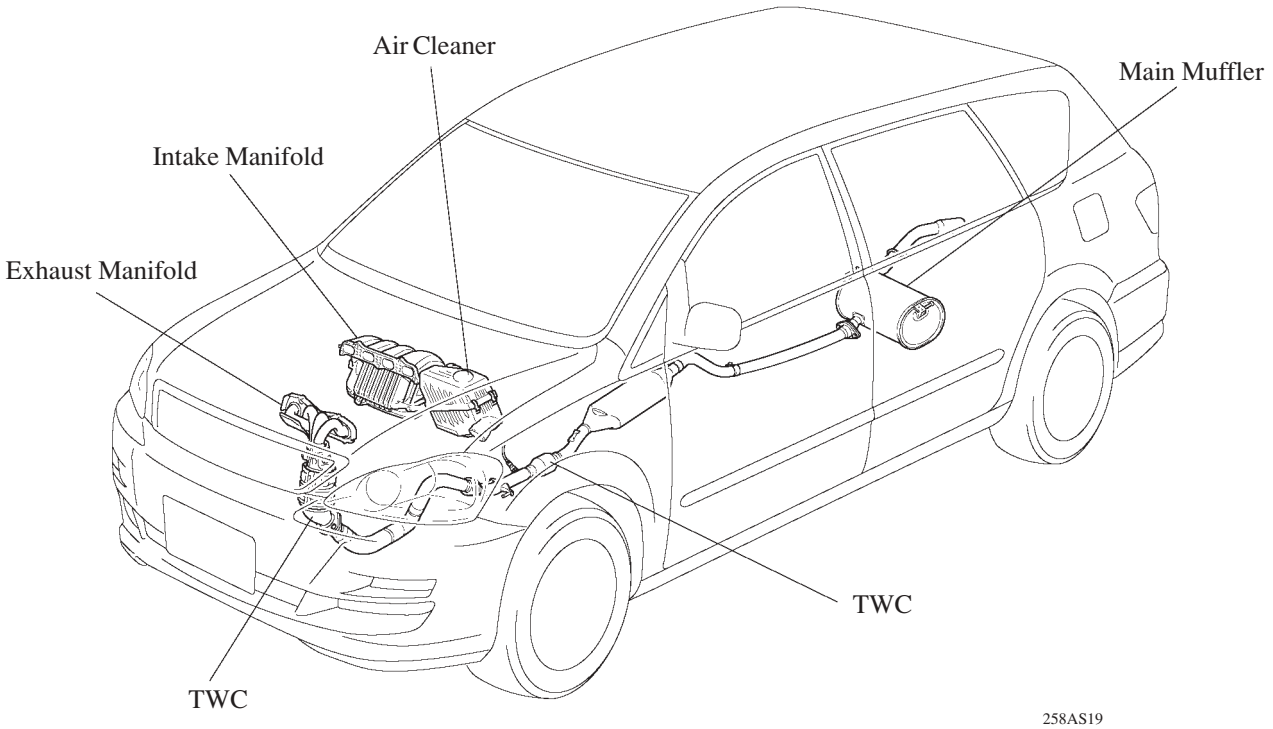

Air Cleaner

A flameless, full-fabric air filter has been adopted to reduce weight and to simplify its disposal.

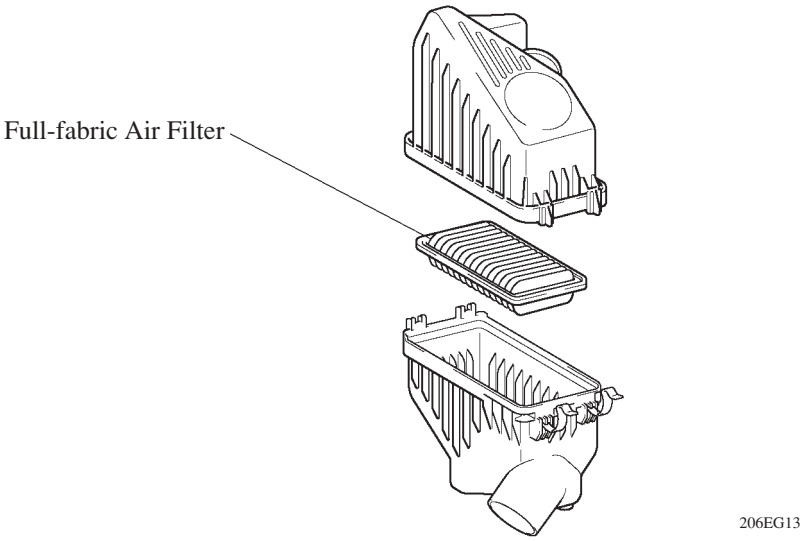

Throttle Body

- An electronic throttle body with a built-in throttle position sensor and throttle control motor has been adopted.
- The adoption of the link-less type ETCS-i has realized excellent throttle control. For details of ETCS-i control, refer to see page 174.
- A DC motor with excellent response and minimal power consumption is used for the throttle control motor. The ECU performs the duty ratio control of the direction and the amperage of the current that flows to the throttle motor in order to regulate the opening angle of the throttle valve.
- The control of the throttle position sensor is the same as that on the 1AZ-FE engine. For details, see page 173.

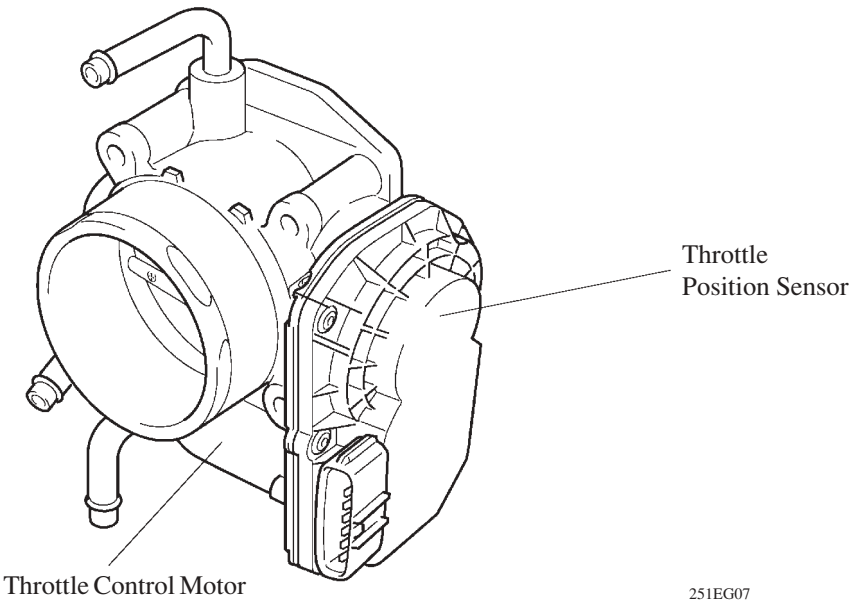

Intake Manifold

- The intake manifold has been made of plastic to reduce the weight and the amount of heat transferred from the cylinder head. As a result, it has become possible to reduce the intake air temperature and improve the intake volumetric efficiency.
- A resonator is installed inside the air intake chamber which makes use of the intake pulse to improve torque in the mid-speed range.

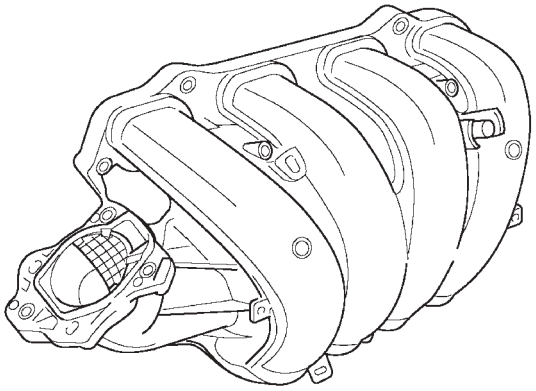

258AS50

Exhaust Manifold

- A stainless steel exhaust manifold is used for weight reduction.
- A single exhaust pipe has been adopted for the start-up converter case in order to improve the warm-up performance of the catalyst and reduce exhaust gas emissions during the starting of the engine.

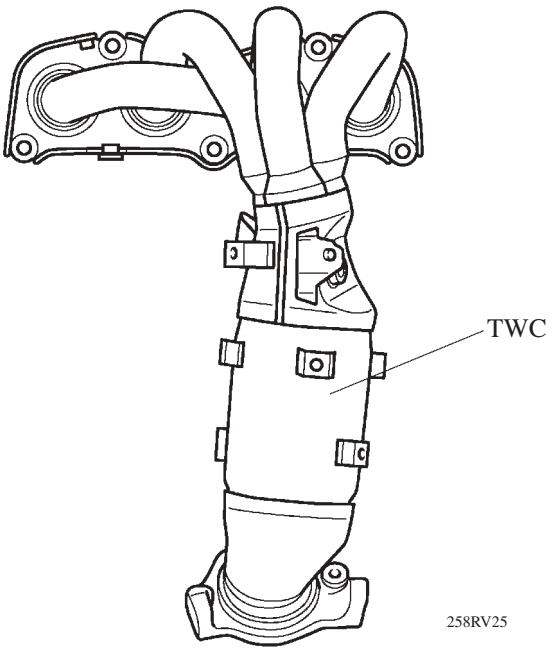

258RV25

Three-Way Catalytic Converter

- The ceramic type TWC (Three-Way Catalytic Converter) has been adopted directly below the exhaust manifold and under floor. This TWC enables to improve exhaust emissions by optimizing the cell's density and the wall thickness.

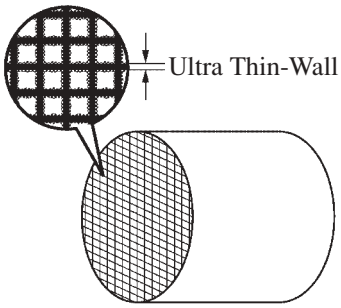

198EG06

Exhaust Pipe

- An under floor catalyst has been adopted and the pipe upstream of the catalyst has been changed to a dual pipe construction.

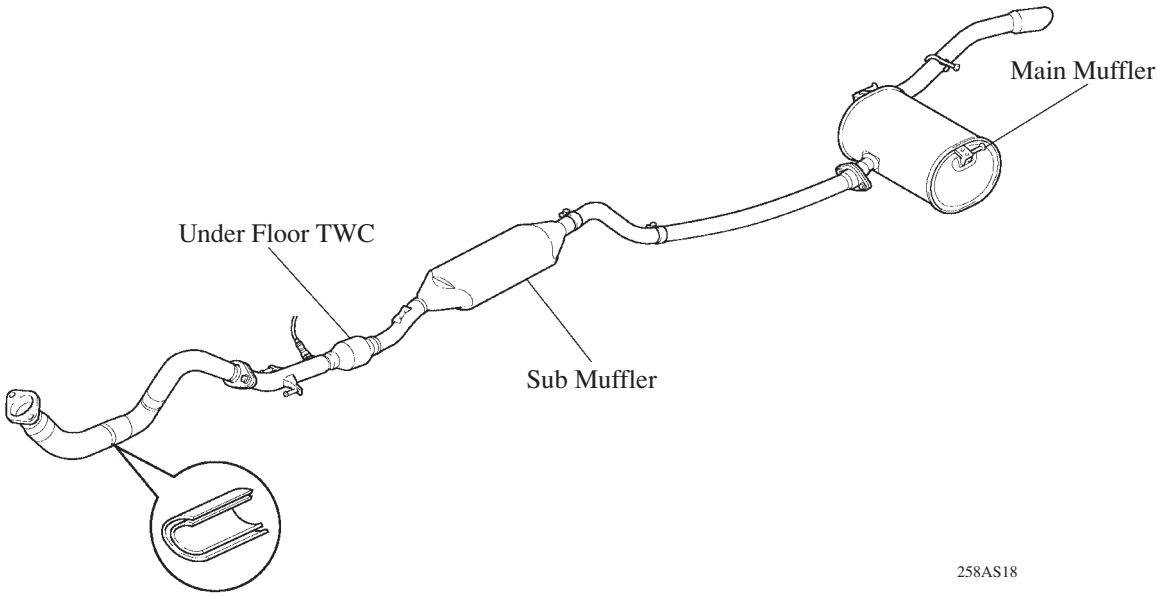

258AS18

9. Fuel System

- A fuel returnless system has been used to reduce evaporative emissions.
- A compact fuel pump in which a fuel filter and pressure regulator are integrated in the module fuel pump assembly has been adopted.
- A quick connector has been adopted to connect the fuel pipe with the fuel hose to improve serviceability.
- The aluminum diecast delivery pipe has been integrated with the pulsation damper.
- Newly designed 12-hole ultra-fine atomization injectors have been adopted.

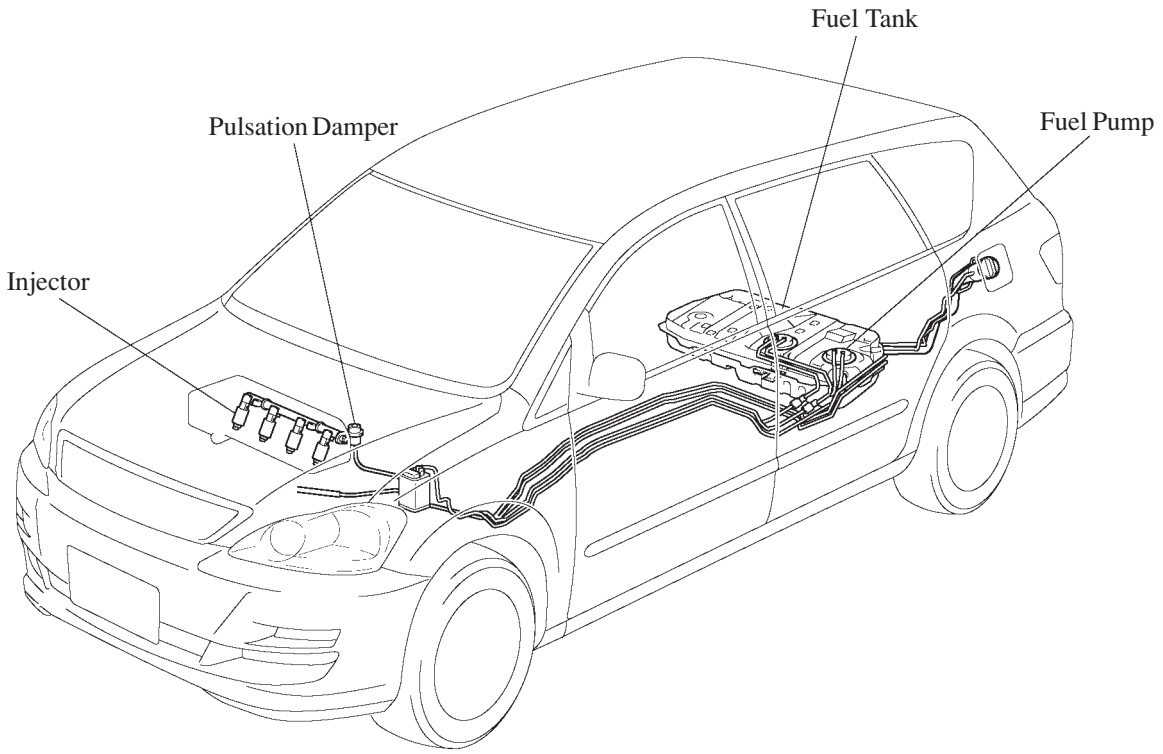

Fuel Returnless System

- This system has been adopted to reduce the evaporative emission. As shown below, integrating the fuel filter, pressure regulator, and fuel sender gauge with fuel pump assembly it possible to discontinue the return of fuel from the engine area and prevent temperature rise inside the fuel tank.

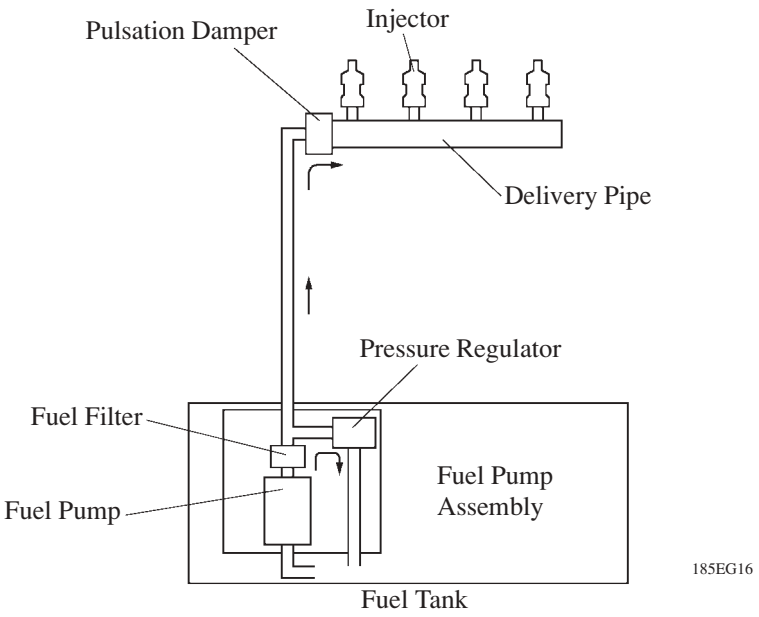

Fuel Injector

The same fuel injectors as the 1AZ-FE engine have been adopted. For details, see page 160.

Fuel Pump

A compact fuel filter, pressure regulator, and fuel sender gauge are integrated in the fuel pump assembly has been adopted.

▶ Specifications of Pressure Regulation ◀

Adjusting Pressure	kPa (kgf/cm^2)	324 ± 3.0 (3.3 ± 0.03)

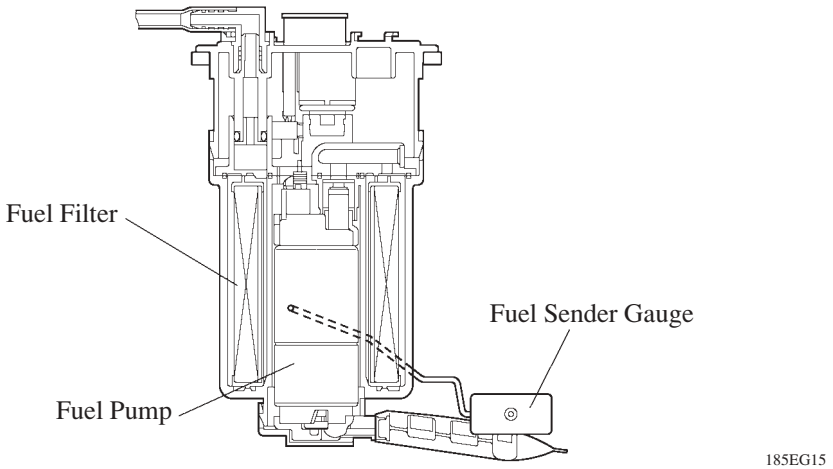

10. Ignition System

General

- A DIS (Direct Ignition System) has been adopted. The DIS improves the ignition timing accuracy, reduces high-voltage loss, and enhances the overall reliability of the ignition system by eliminating the distributor.
  The DIS in this engine is an independent ignition system which has one ignition coil (with igniter) for each cylinder.
- Iridium-tipped spark plugs have been adopted.

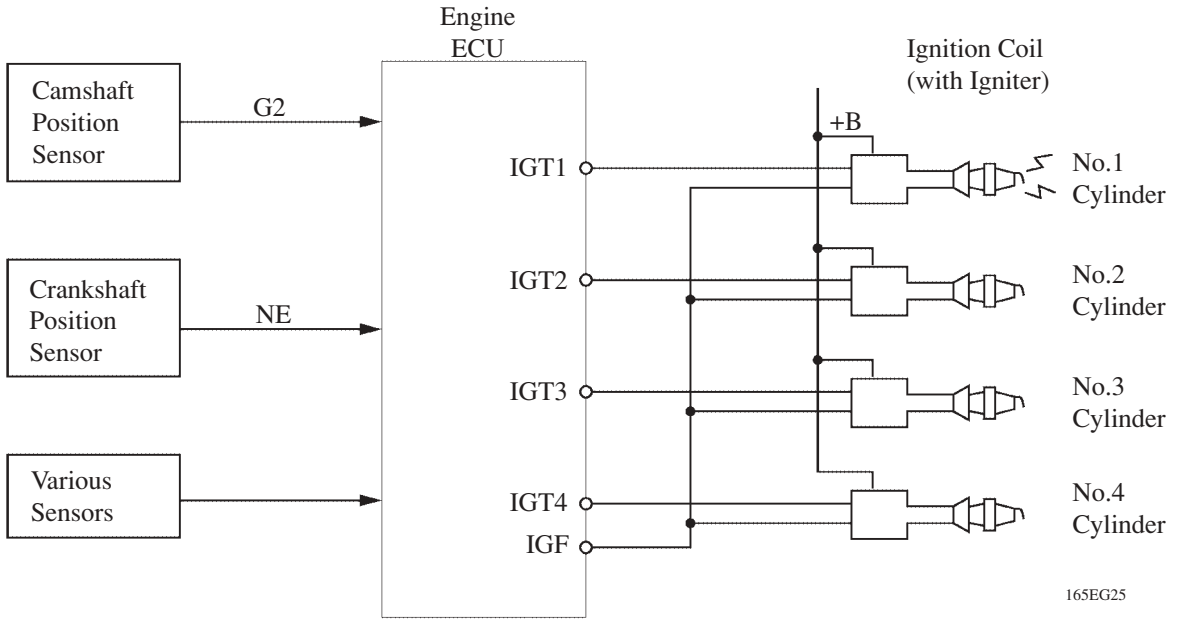

Ignition Coil

The DIS provides 4 ignition coils, one for each cylinder. The spark plug caps, which provide contact to the spark plugs, are integrated with an ignition coil. Also, an igniter is enclosed to simplify the system.

Spark Plug

Iridium-tipped spark plugs have been adopted to realize a 192,000 km (120,000 mile) maintenance-free operation. By making the center electrode of iridium, the same ignition performance as of the platinum-tipped spark plug and further improvement of durability have been realized.

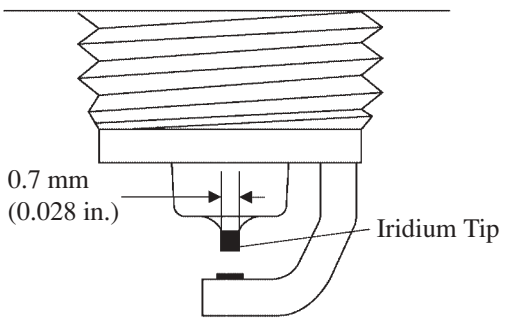

▶ Specifications ◀

DENSO	SK20R11
NGK	IFR6A11
Plug Gap	1.0 – 1.1 mm (0.0394 – 0.043 in.)

11. Charging System

General

- Instead of the conventional type alternator, a compact and lightweight segment conductor type alternator has been adopted for automatic transaxle model. This type of alternator generates high amperage output in a highly efficient manner.
- This alternator has a joined segment conductor system, in which multiple segment conductors are welded together to form the stator. Compared to the conventional winding system, the electrical resistance is reduced due to the shape of the segment conductors, and their arrangement helps to make the alternator more compact.
- The charging of this alternator is controlled by the engine ECU. For details, see page 214.

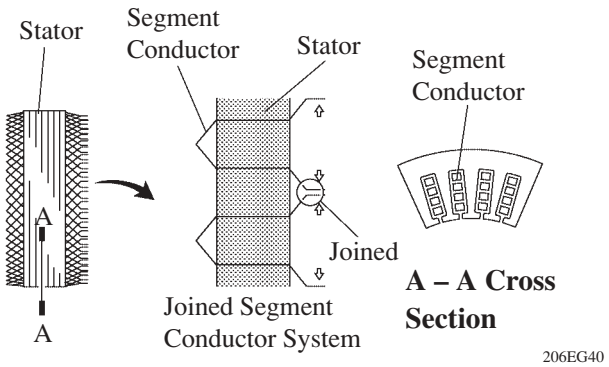

Segment Conductor Type Alternator

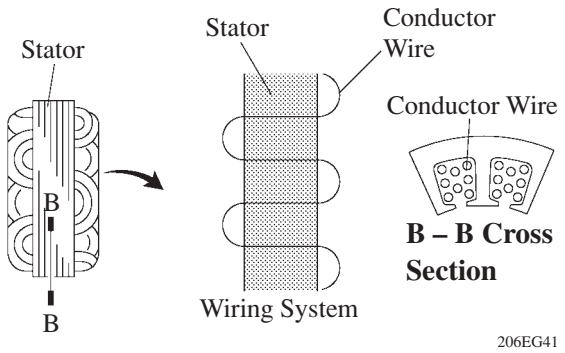

Conventional Type Alternator

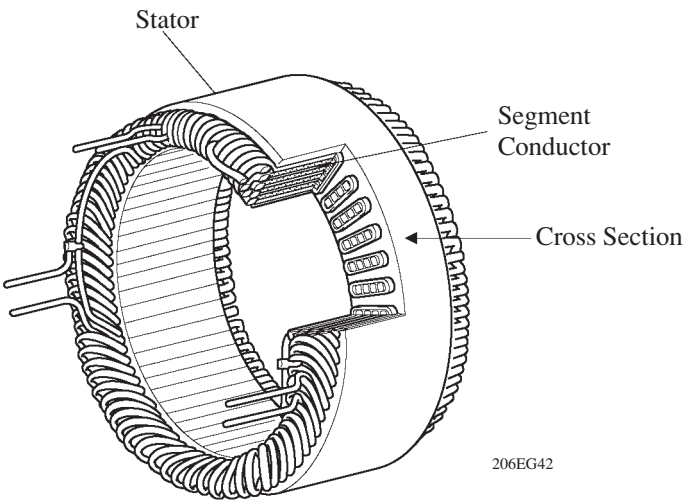

Stator of Segment Conductor Type Alternator

▶ Specifications ◀

Type	Segment Conductor (SC1)
Rated Voltage	12 V
Output Rated	130 A
Initial Output Starting Speed	1300 rpm Max.

▶ Wiring Diagram ◀

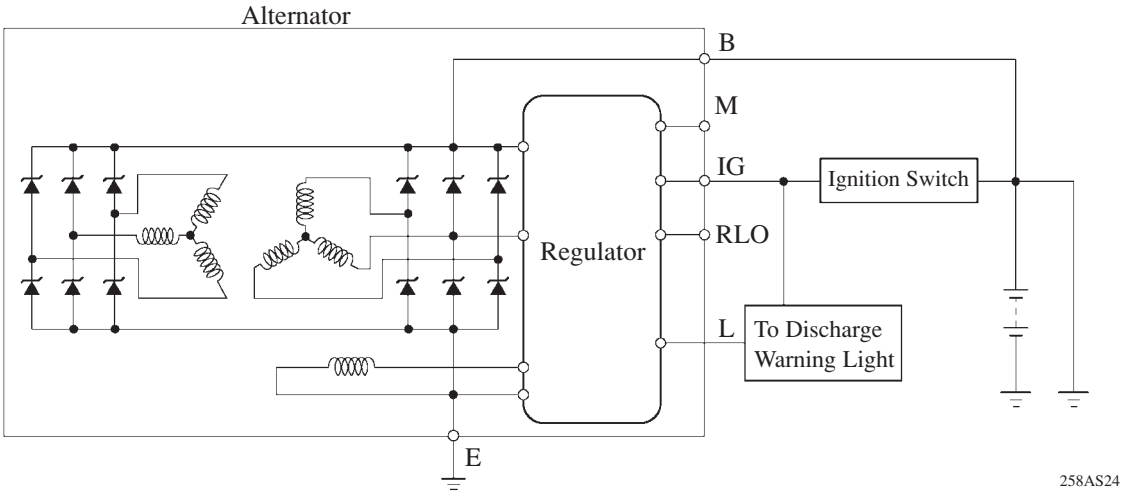

Service Tip

Although the charging circuit of a conventional alternator is checked through the F terminal, this check cannot be performed on the Segment Conductor type alternator through the use of the F terminal because the F terminal has been eliminated.

Dual Winding System

A dual winding system has been adopted. This system consists of two sets of three-phase windings whose phases are staggered 30°. Because the magnetic fluctuations of the respective windings cancel each other out, magnetic noise, radio frequency interference is reduced.

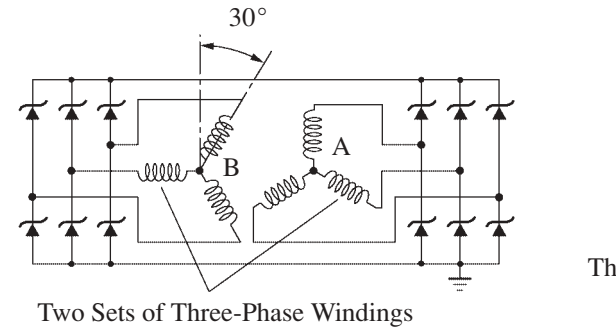

Segment Conductor Type Alternator

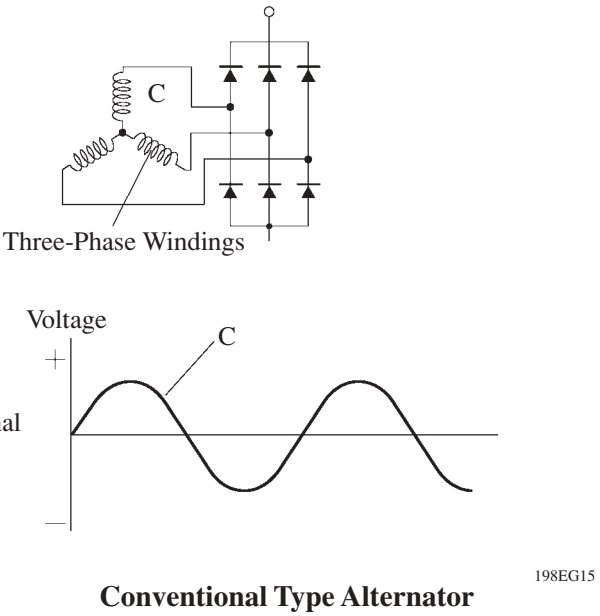

Conventional Type Alternator

12. Serpentine Belt Drive System

General

- Accessory components are driven by a serpentine belt consisting of a single V-ribbed belt. It reduces the overall engine length, weight and number of engine parts.
- An automatic tensioner eliminates the need for tension adjustment.

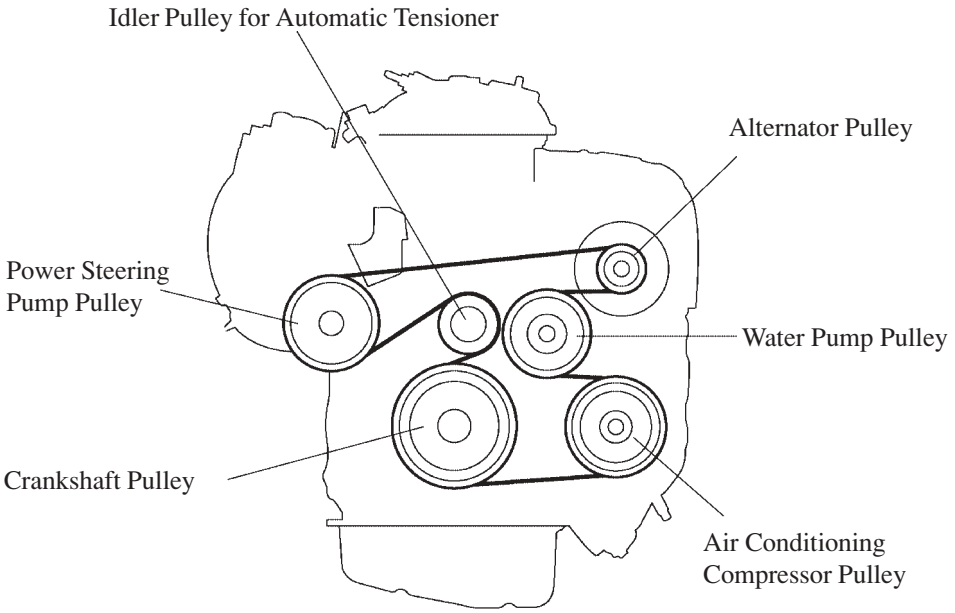

Automatic Tensioner

- The automatic tensioner consists of an idler pulley and a tensioner. The idler pulley maintains belt tension by the force of the spring that is located in the tensioner.
- Due to the different suppliers used, the tensioner comes in two types, although their basic operation remain the same and they are interchangeable.

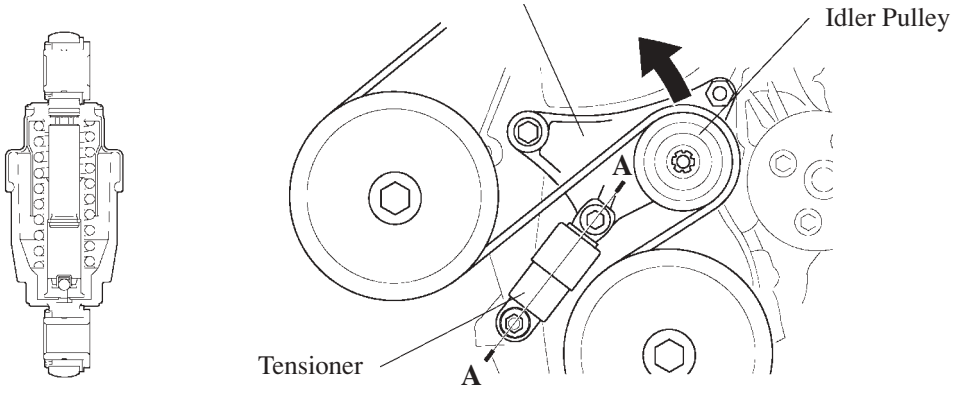

A – A Cross Section

13. Engine Control System

General

The engine control system of the 2AZ-FE engine has following system.

System	Outline	New 2AZ-FE	Previous 1AZ-FE
EFI (Electronic Fuel Injection)	An L-type EFI system directly detects the intake air mass with a hot wire type air flow meter.	○	○
ESA (Electronic Spark Advance)	Ignition timing is determined by the engine ECU based on signals from various sensors. The engine ECU corrects ignition timing in response to engine knocking.	○	○
ETCS-i (Electronic Throttle Control System-intelligent) (See page 174)	● Optimally controls the throttle valve opening in accordance with the amount of accelerator pedal effort and the condition of the engine and the vehicle. ● A link-less type is used, without an accelerator cable. ● A contact type accelerator pedal position sensor is provided on the accelerator pedal. ● A no-contact type throttle position sensor is used. ● Controls the fast idle and idle speed.	○	—
VVT-i (Variable Valve Timing-intelligent) (See page 212)	Controls the intake camshaft to an optimal valve timing in accordance with the engine condition.	○	○
Oxygen Sensor Heater Control	Maintains the temperature of the oxygen sensor at an appropriate level to increase accuracy of detection of the oxygen concentration in the exhaust gas.	○	○
Air Conditioner Cut-off Control*	By turning the air conditioner compressor ON or OFF in accordance with the engine condition, drivability is maintained.	○	○
Cooling Fan Control (See page 213)	Radiator cooling fan operation is controlled by water temperature sensor signal (THW) and the condition of the air conditioner operation.	○	○
Charging Control (See page 214)	The engine ECU regulates the charging voltage of the alternator in accordance with the driving conditions and the battery's state of charge.	○	—
Fuel Pump Control	Fuel pump operation is controlled by signal from the engine ECU.	○	○
	A fuel cut control is adopted to stop the fuel pump when any airbag is deployed during front or side collision.	○	○
Evaporative Emission Control	The engine ECU controls the purge flow of evaporative emission (HC) in the charcoal canister in accordance with engine conditions.	○	○
Engine Immobilizer	Prohibits fuel delivery and ignition if an attempt is made to start the engine with an invalid ignition key.	○	○
	The ID code stored in the transponder key ECU is compared with that of the transponder tip in the ignition key.	○	—
Diagnosis (See page 216)	When the engine ECU detects a malfunction, the engine ECU dragnoses and memorized the failed section.	○	○
	All the DTCs (Diagnostic Trouble Codes) have been made to correspond to the SAE controlled codes.	○	—
Fail-Safe (See page 216)	When the engine ECU detects a malfunction, the engine ECU stops or controls the engine according to the data already stored in the memory.	○	○

*: With Air Conditioner Model

Construction

The configuration of the engine control system in the 2AZ-FE engine in the new Avensis Verso is as shown in the following chart.

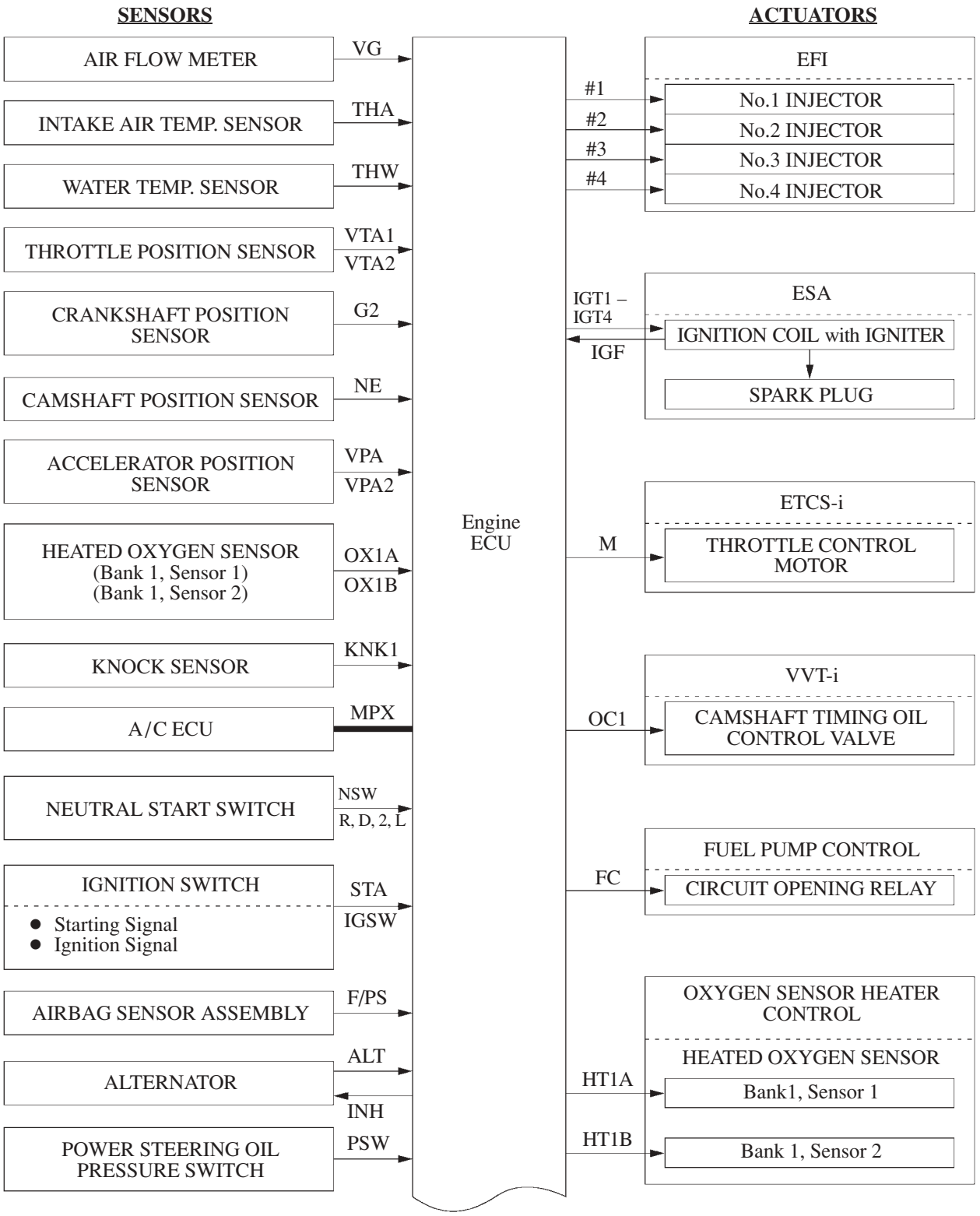

(Continued)

▬: BEAN

258AS25

4

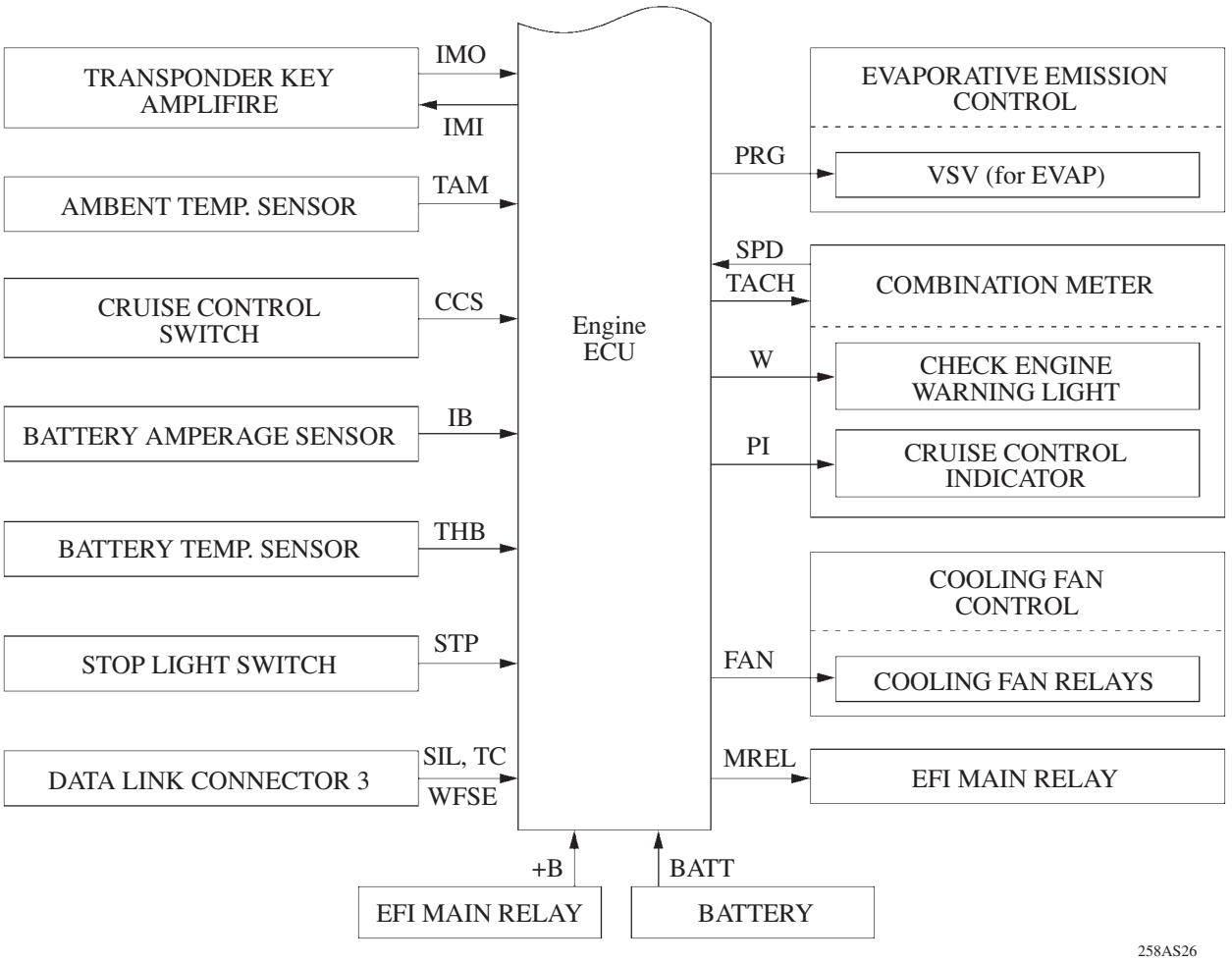
TRANSPONDER KEY AMPLIFIRE
IMO
IMI
AMBENT TEMP. SENSOR
TAM
CRUISE CONTROL SWITCH
CCS
BATTERY AMPERAGE SENSOR
IB
BATTERY TEMP. SENSOR
THB
STOP LIGHT SWITCH
STP
DATA LINK CONNECTOR 3
SIL, TC
WFSE
Engine ECU
+B
BATT
EFI MAIN RELAY
BATTERY
EVAPORATIVE EMISSION CONTROL
PRG
VSV (for EVAP)
SPD
TACH
COMBINATION METER
W
CHECK ENGINE WARNING LIGHT
PI
CRUISE CONTROL INDICATOR
COOLING FAN CONTROL
FAN
COOLING FAN RELAYS
MREL
EFI MAIN RELAY
258AS26

Engine Control System Diagram

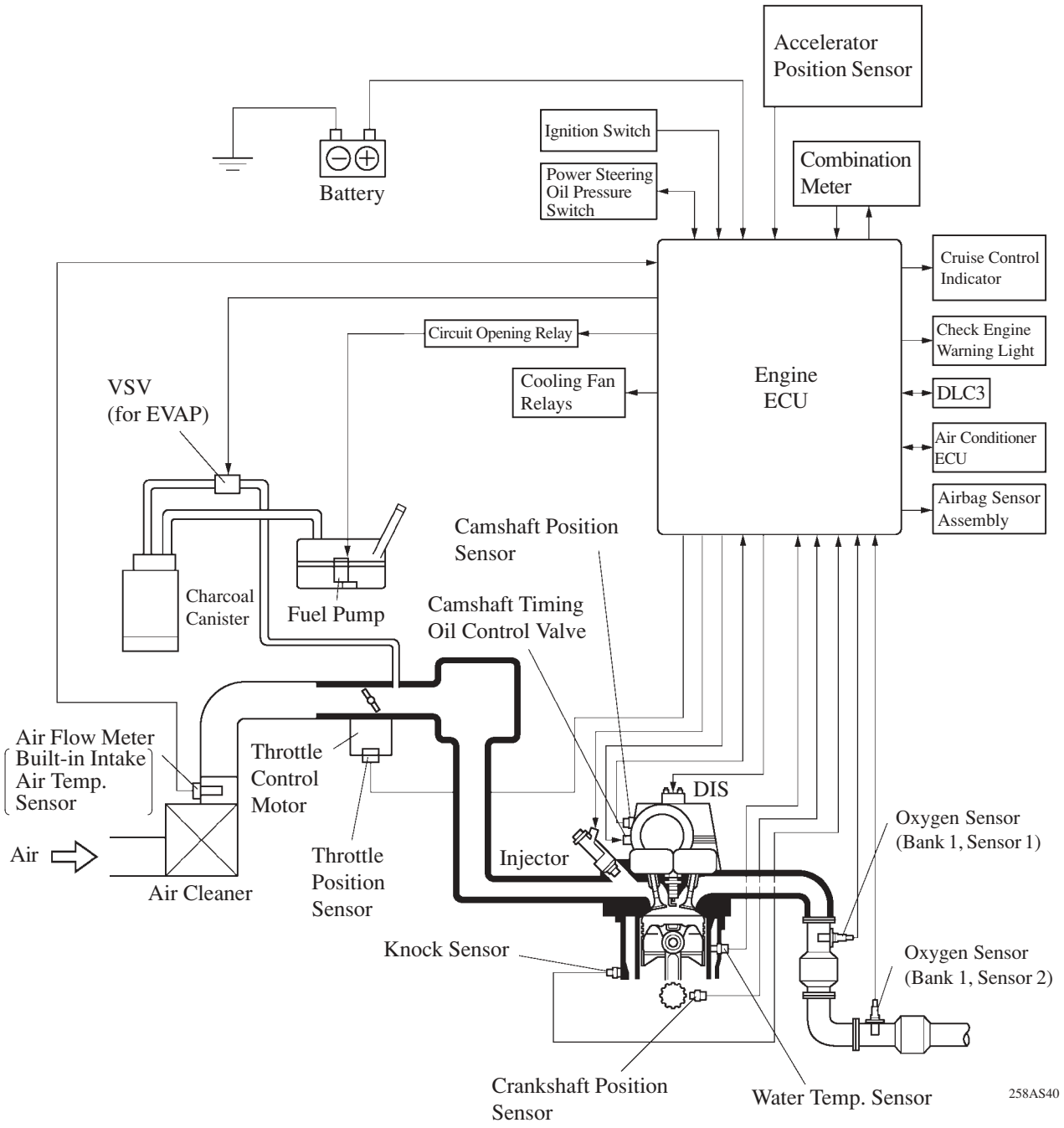

Layout of Main Components

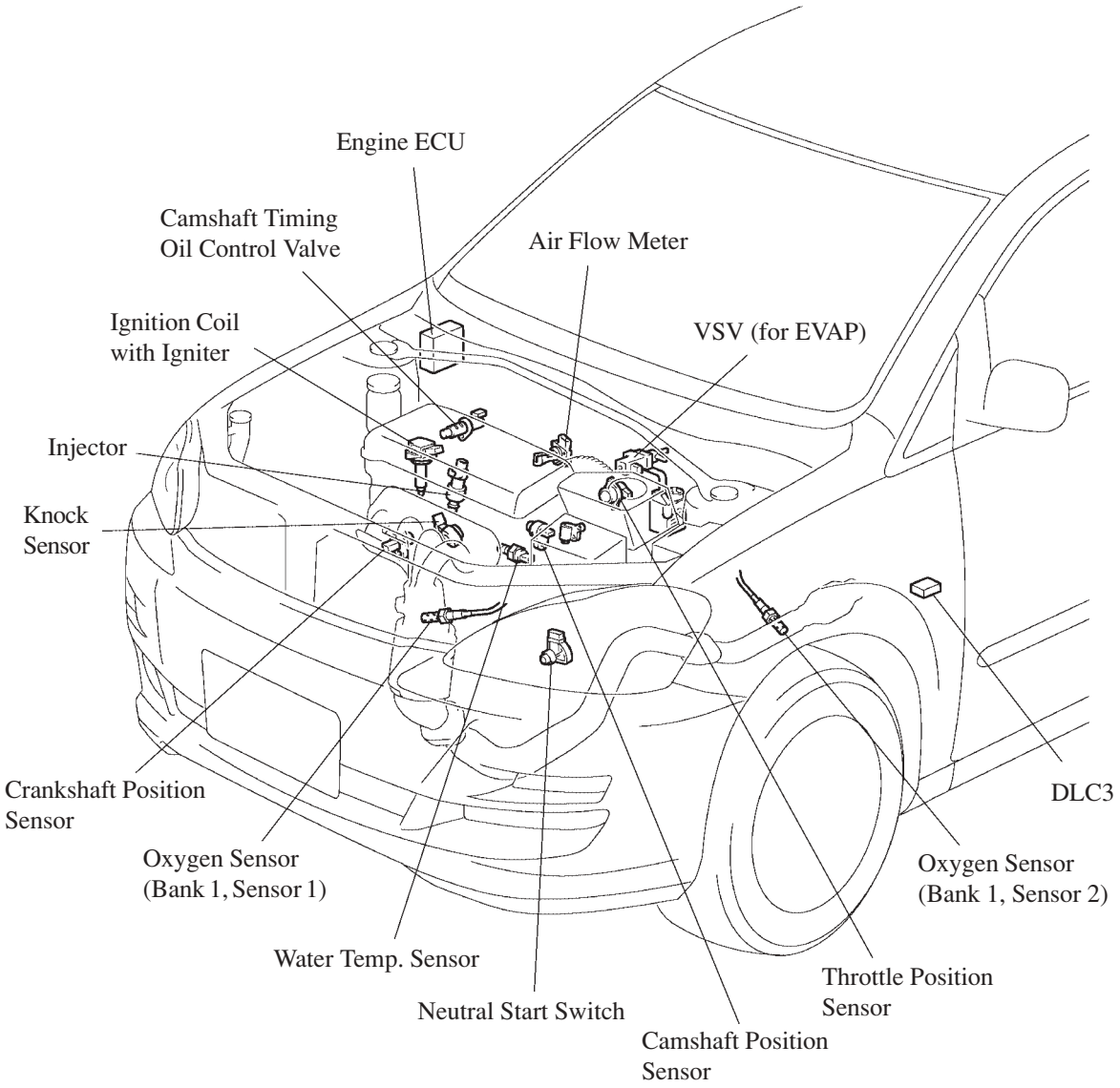

258AS17

Main Components of Engine Control System

1) General

The following table shows the main components.

Components	New (2AZ-FE)		Previous (1AZ-FE)	
	Outline	Quantity	Outline	Quantity
Engine ECU	32-bit CPU	1	←	1
Air Fuel Ratio Sensor (Bank 1, Sensor 1)	—		with Heater Type (Cup type)	2
Oxygen Sensor (Bank 1, Sensor 1)	with Heater Type (Cup type)	1	—	
Oxygen Sensor (Bank 1, Sensor 2)	with Heater Type (Cup type)	1	←	2
Air Flow Meter	Hot-wire Type	1	←	
Crankshaft Position Sensor (Rotor Teeth)	Pick-up Coil Type (36-2)	1	←	
Camshaft position Sensor (Rotor Teeth)	Pick-up Coil Type (3)	1	←	
Knock Sensor	Built-in Piezoelectric Element Type (Flat Type)	1	Built-in Piezoelectric Element Type (Resonant Type)	1
Accelerator Pedal Position Sensor	Contact Type	1	—	
Throttle Position Sensor	No-contact Type	1	Contact Type	1

2) Knock Sensor (Flat type)

The same knock sensor as the 1AZ-FE engine has been adopted. For details, see page 169.

3) Accelerator Pedal Position Sensor (Contact type)

The same accelerator pedal position sensor as the 1AZ-FE engine has been adopted. For details, see page 172.

4) Throttle Position Sensor (No-contact type)

The same throttle position sensor as the 1AZ-FE engine has been adopted. For details, see page 173.

ETCS-i (Electronic Throttle Control System-intelligent)

The same ETCS-i control as the 1AZ-FE engine has been adopted. For details, see page 174.

VVT-i (Variable Valve Timing-intelligent) System

The VVT-i system designed to control the intake camshaft within a wide range of 50° (of crankshaft angle) to provide a valve timing that is optimally suited to the engine condition, thus realizing improved torque in all the speed ranges and fuel economy, and reduce exhaust emission. The actual intake valve timing is feedback by means of the camshaft position sensor for constant control to the target valve timing.

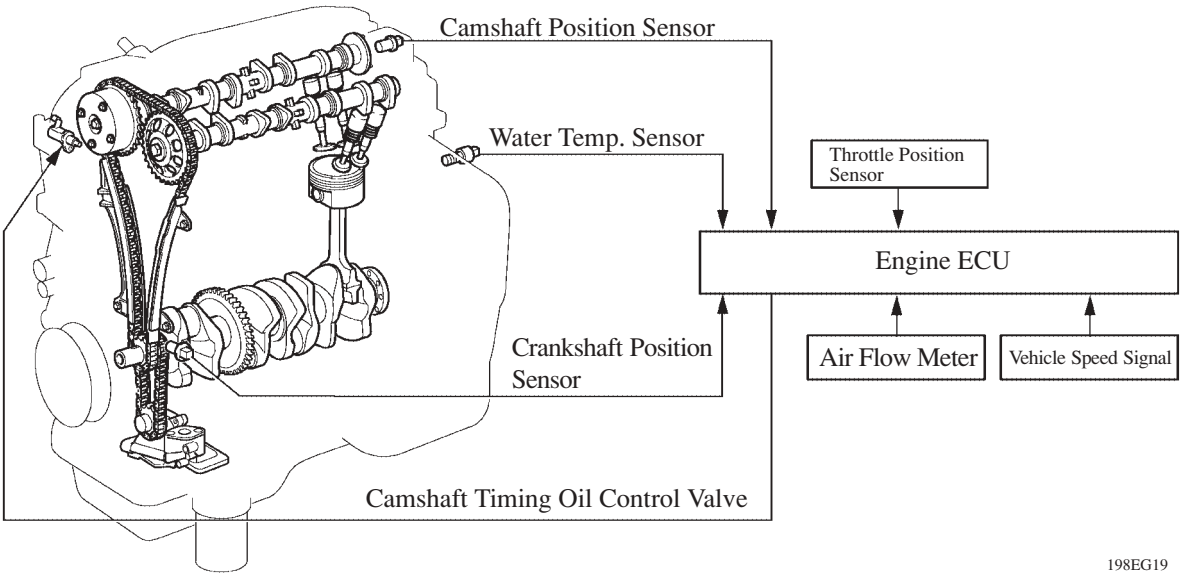

198EG19

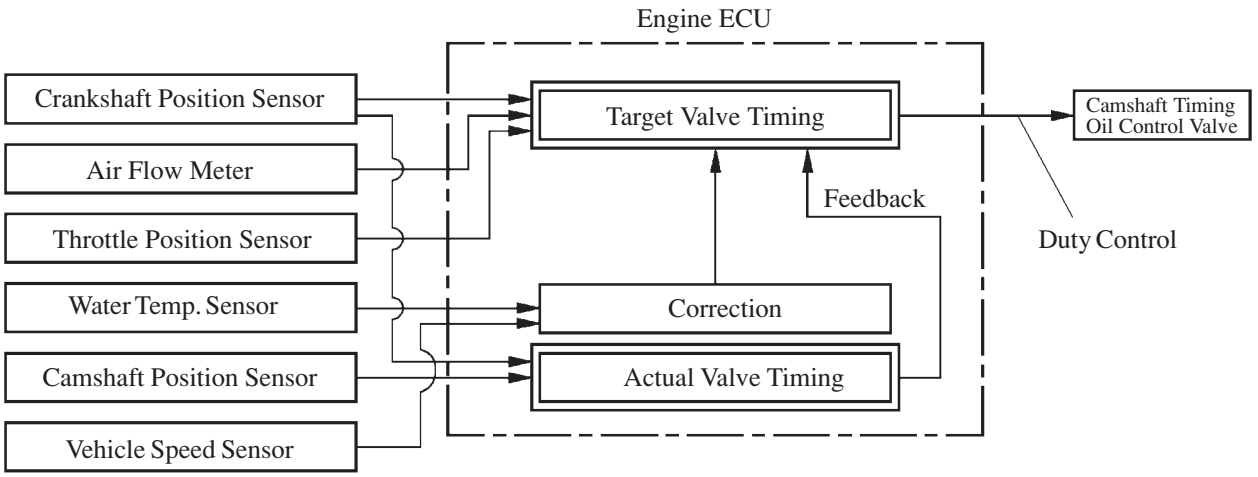

172CR07

Cooling Fan Control

A cooling fan system in which the engine ECU controls the cooling fan speed in accordance with the signals from the water temperature sensor, etc. has been adopted.
The engine ECU controls the cooling fan speeds in accordance with the water temperature and the operating conditions of the A/C compressor, A/C pressure switch. This control is accomplished by operating the 2 fan motors in 2 stages through low speed (series connection) and high speed (parallel connection).

▶ Wiring Diagram ◀

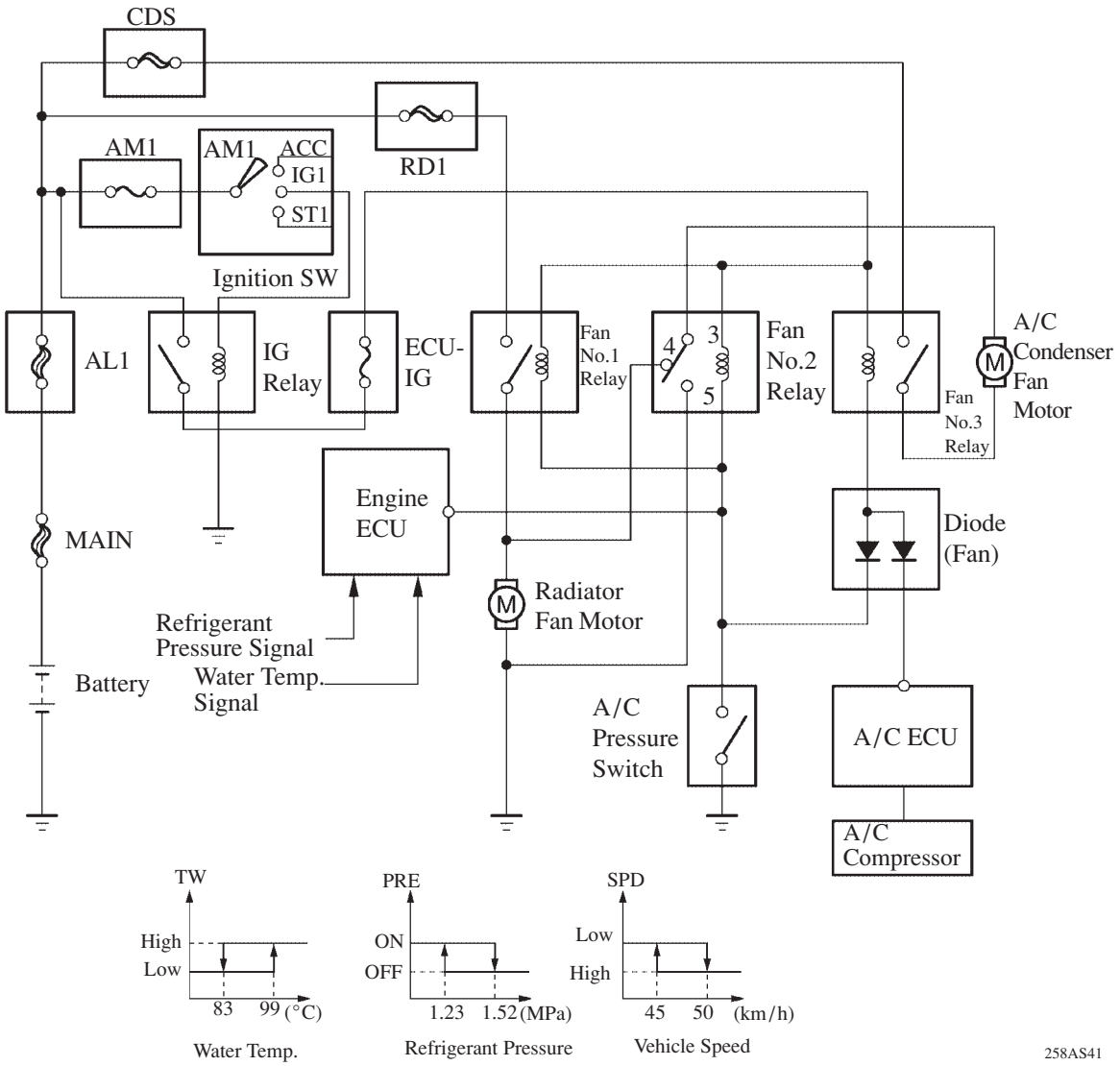

▶ Cooling Fan Operation ◀

A/C Compressor	Water Temperature	A/C Pressure Switch	Vehicle Speed	Relay Operation			Cooling Fan Operation	Cooling Fan Motor Connection
				No.1	No.2	No.3		
OFF	High	–	–	ON	3 to 5	ON	High	Parallel
	Low	–	–	OFF	3 to 4	OFF	OFF	OFF
ON	High	–	–	ON	3 to 5	ON	High	Parallel
	Low	ON	–	ON	3 to 5	ON	High	Parallel
		OFF	Low	OFF	3 to 4	ON	Low	Series
			High	OFF	3 to 4	OFF	OFF	OFF

Charging Control

1) General

The engine ECU decreases the voltage generated by the alternator during acceleration of the vehicle, and increases the generated voltage during deceleration. This control reduces the load imposed on the engine by the alternator during generation, in order to promote the fuel economy of the engine.
During idling and constant-speed driving, the engine ECU regulates the generated voltage. This is performed in accordance with the battery input and output amperage values, which are detected by the current sensor and tallied by the engine ECU.

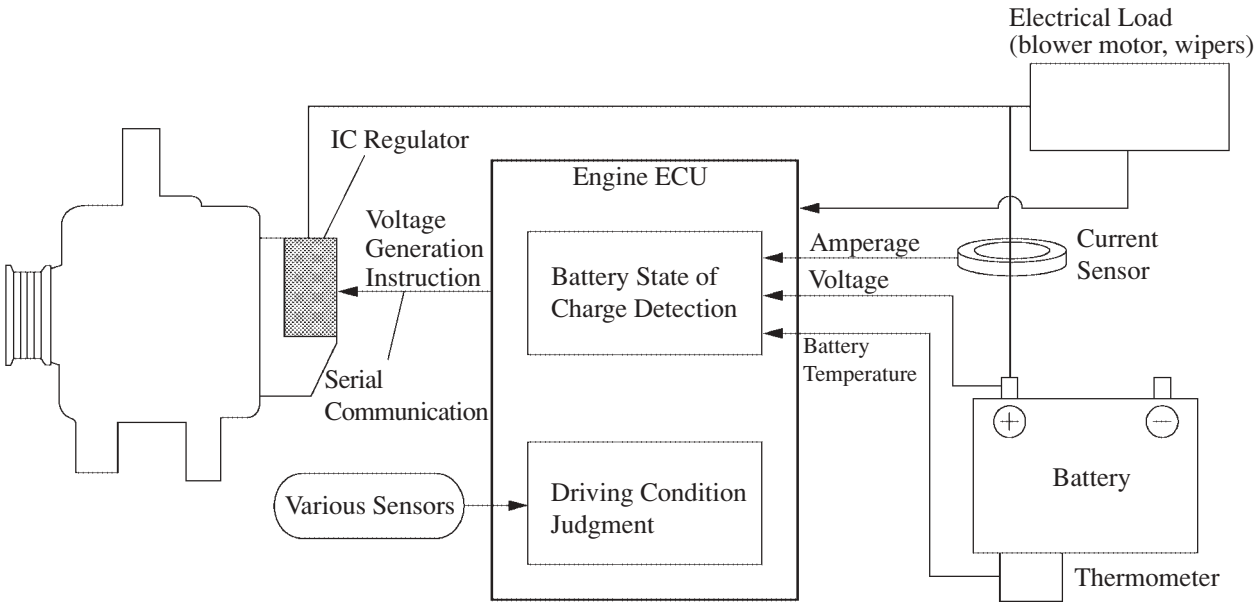

258AS29

Charging Control Operation Example:

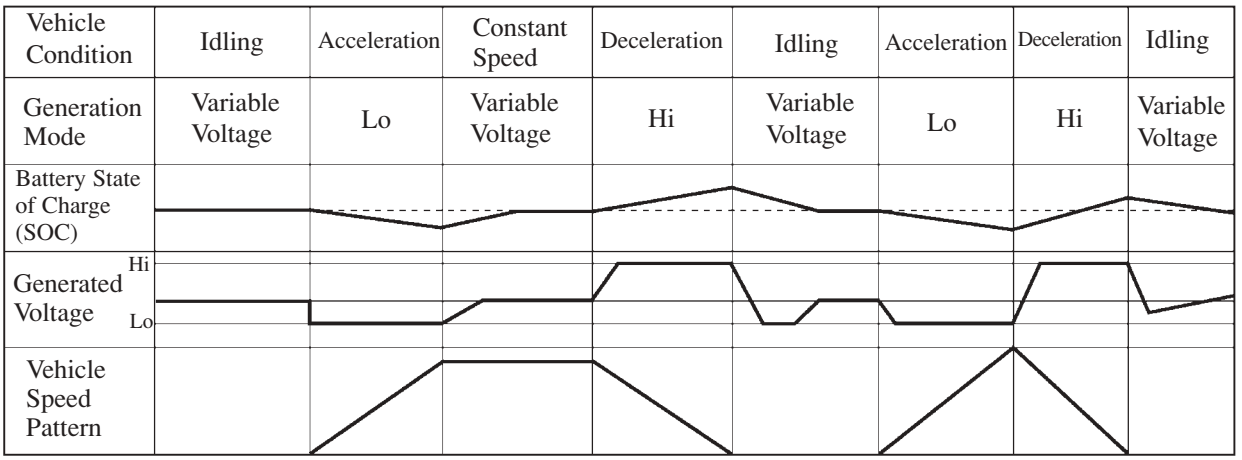

258AS30

▶ Function of Main Components ◀

Item	Outline
Engine ECU	Controls the generated voltage of the alternator according to the battery condition and vehicle driving condition.
Current Sensor	Measures the input and output current, and outputs to the engine ECU.
Thermometer	Measures the battery temperature by thermistor, and outputs to the engine ECU.

2) Current Sensor

The Current Sensor installed in the positive terminal of battery measures the battery input and output current.
The battery input and output current is used to judge the battery state of charge by engine ECU.

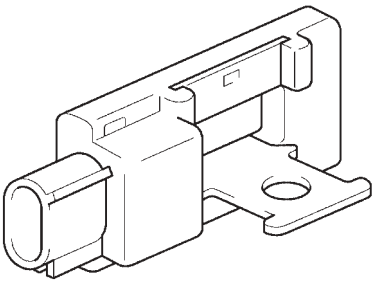

258AS58

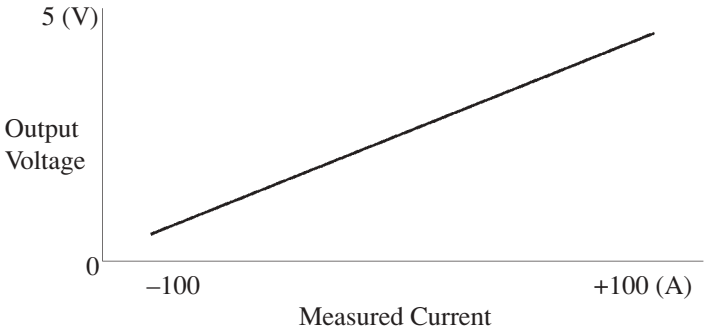

Characteristic of Current Sensor

258AS61

3) Thermometer

The Thermometer is installed on the battery tray. The thermistor on the sensor measures the battery temperature. Thermistor is thermally sensitive resister which varies a resistance value significantly in accordance with temperature changing.
Battery temperature is used to judge the battery state of charge by engine ECU.

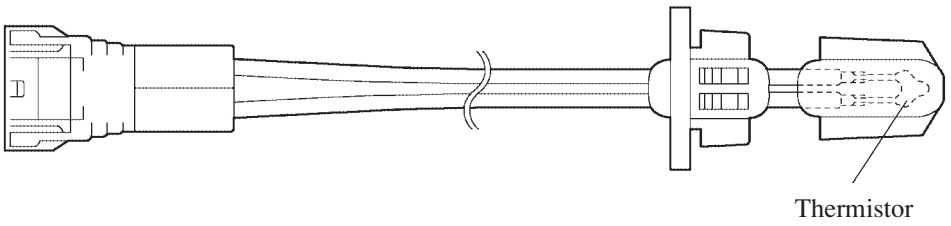

258AS59

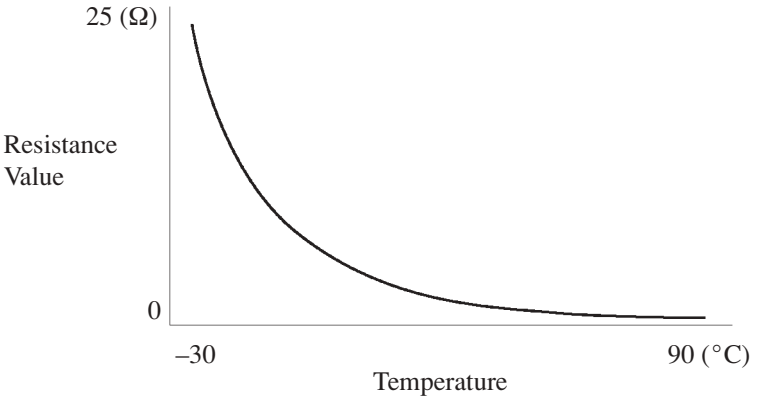

Characteristic of Battery Thermometer

258AS60

Diagnosis

- When the engine ECU detects a malfunction, the engine ECU makes a diagnosis and memorizes the failed section.
  Furthermore, the check warning light in the combination meter illuminates or blinks to inform the driver.
- The engine ECU will also store the DTCs (Diagnostic Trouble Codes) of the malfunctions.
- The DTCs can be accessed the use of the hand-held tester.
- All the DTCs have been made to correspond to the SAE controlled codes. For details, refer to the Avensis Verso Repair Manual (Pub. No. RM1032E).

Service Tip

To clear the DTC that is stored in the engine ECU, use a hand-held tester, or disconnect the battery terminal, or remove the EFI fuse for 1 minute or longer.

Fail-Safe

When the engine ECU detects a malfunction, the engine ECU stops or controls the engine according to the data already stored in the memory.

▶ Fail-Safe Chart ◀

DTC No.	Fail-Safe Operation	Fail-Safe Deactivation Conditions
P0100, P0102, P0103	Ignition timing is calculated from engine speed and a throttle angle.	Return to normal condition.
P0110, P0112, P0113	Intake air temp. is fixed at 20°C (68°F).	Return to normal condition.
P0115, P0117, P0118	Water temp. is fixed at 80°C (176°F).	Return to normal condition.
P0120, P0122, P0123, P0220, P0222, P0223, P2135	Fuel cut intermittently when idle.	Return to normal condition and ignition switch OFF.
P0325, P0327, P0328	Max. timing retardation.	Ignition switch OFF.
P0351, P0352, P0353, P0354	Fuel cut.	Return to normal condition.
P0516, P0517, P1550, P1551, P1552, P1602	Charging Control is stopped.	Return to normal condition.
P0604, P0606, P0607, P0657	Fuel cut intermittently when idle.	Return to normal condition and ignition switch OFF.
P2102, P2103	Fuel cut intermittently when idle.	Return to normal condition and ignition switch OFF.
P2111, P2112	Fuel cut intermittently when idle.	Return to normal condition and ignition switch OFF.
P2118, P2119	Fuel cut intermittently when idle.	Return to normal condition and ignition switch OFF.

■ 1CD-FTV ENGINE

Cooling System

The TOYOTA genuine Super Long Life Coolant (SLLC) has been adopted. As a result, the maintenance interval has been extended. For details, see page 157

▶ Specifications ◀

Model			New	Previous
Engine Coolant	Capacity liters (US qts, Imp. qts)	with heater	8.8 (9.3, 7.7)	←
		without heater	7.6 (8.0, 6.7)	

■SHOCK ABSORBER

1. General

A multi-leaf type linear control valve has been adopted to attain linear damping force characteristics.

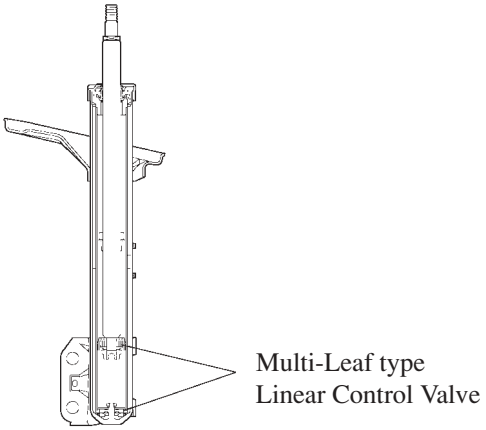

258AS47

2. Construction of Multi-Leaf type Linear Control Valve

The multi-leaf type linear control valve has a structure of several layered leaf valves with different diameter. With the adoption of the multi-leaf type linear control valve, the changes in the damping force are made constant at low piston speeds, thus it realize the excellent riding comfort and controllability.

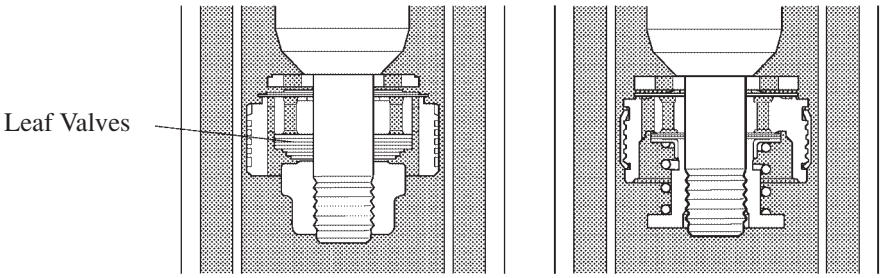

258AS48

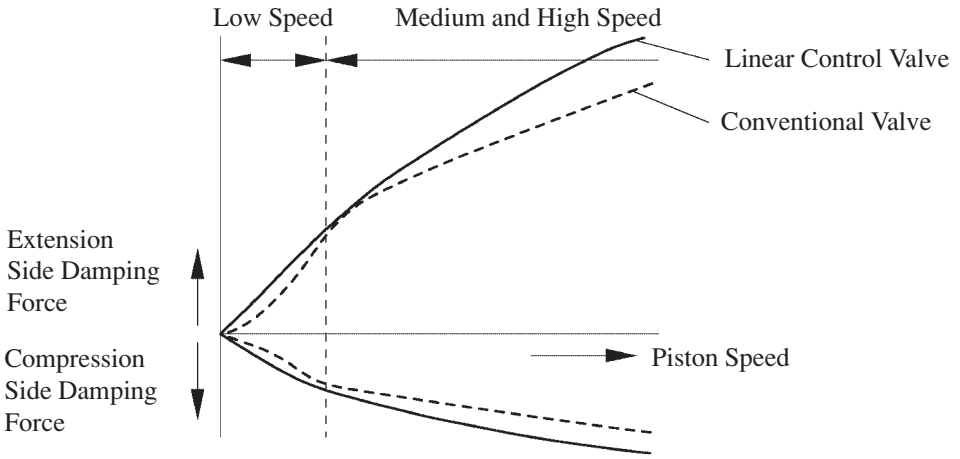

Damping Force Characteristics

258AS49

■BRAKE

1. Brake Control System (ABS with EBD and Brake Assist)

Brake Actuator

1) General

Along with the new provision of the mechanical type brake assist as standard equipment, the master cylinder pressure sensor and the brake assist switching solenoid valve have been discontinued. As a result, the actuator has been made more compact and lightweight.

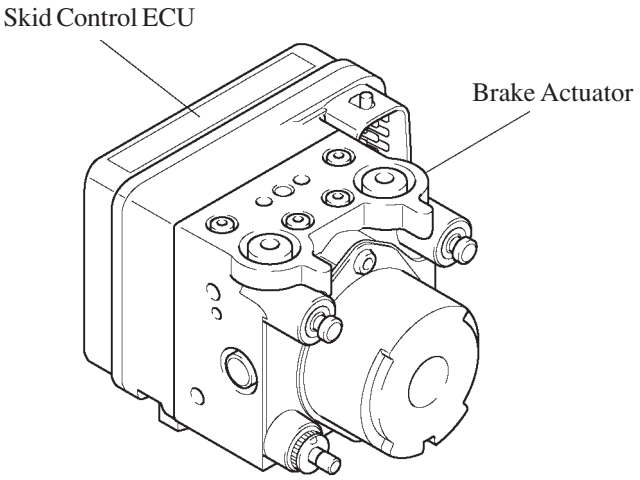

258AS51

▶ System Diagram ◀

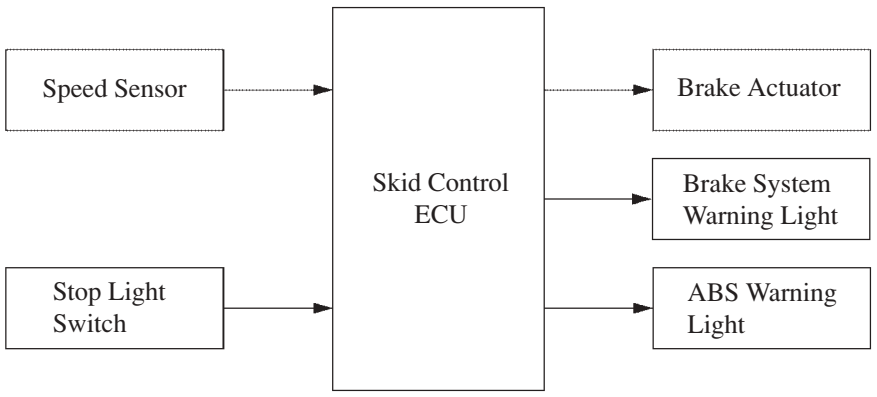

258AS52

2) Actuator Portion

The brake actuator consists of 8 two-position valves, 2 pumps, 1 motor, and 2 reservoirs. The 8 two-position solenoid valves consist of the following:

- 4 pressure holding valves [(1), (2), (3), (4)]
- 4 pressure reduction valves [(5), (6), (7), (8)]

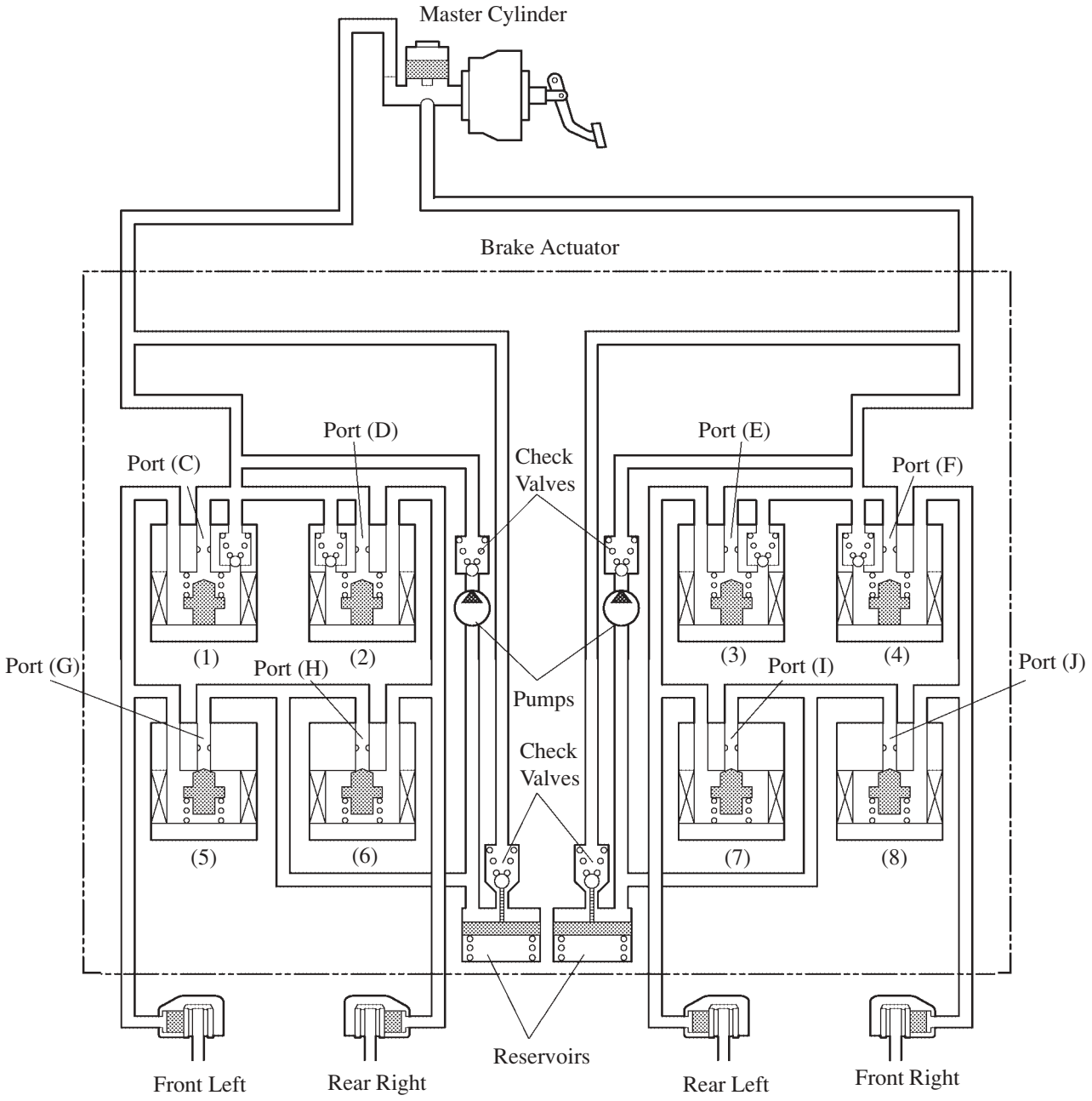

243CH73

▶ Function of Main Components ◀

Component		Function
(1), (2), (3), (4)	Pressure Holding Valve	Each wheel cylinder contains a pressure holding valve and a pressure reduction valve. A combination of the ON/OFF conditions of the respective valves is used in order to change the increase mode, holding mode, or the reduction mode during the operation of the ABS system.
(5), (6), (7), (8)	Pressure Reduction Valve	
Reservoir		While effecting the reduction mode during the operation of the ABS system, the reservoir stores the brake fluid that has returned from the wheel cylinders. It also functions as an accumulator.
Pump		Pumps the brake fluid that is stored in the reservoir and returns it to the master cylinder.
Check Valve		Check valves are located before and after the between the pump and reservoir. They open only in one direction to prevent the brake fluid from flowing backwards.

Brake Assist Operation (for Brake Assist Mechanical Type)

1) General

This brake booster consists of a conventional type brake booster to which a brake assist mechanism has been added. During a normal brake operation, the function of the brake booster is the same as in the conventional type. The major difference in construction between this booster from the conventional type is the addition of the slide valve and the slide valve hook in the air valve.

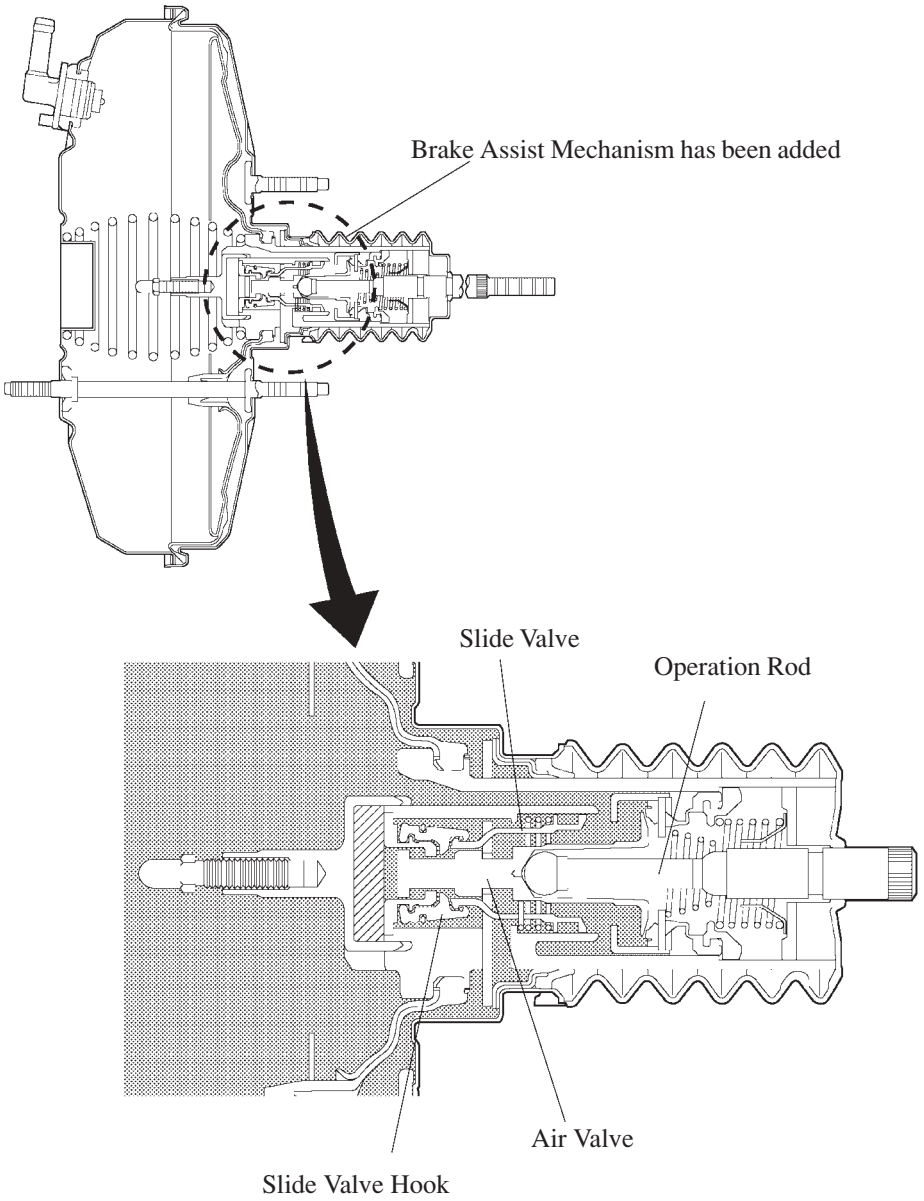

233CH84

2) Operation

No Braking Condition

The air valve closes, the control valve opens, and the pressure is the same in the variable pressure chamber and the constant pressure chamber.

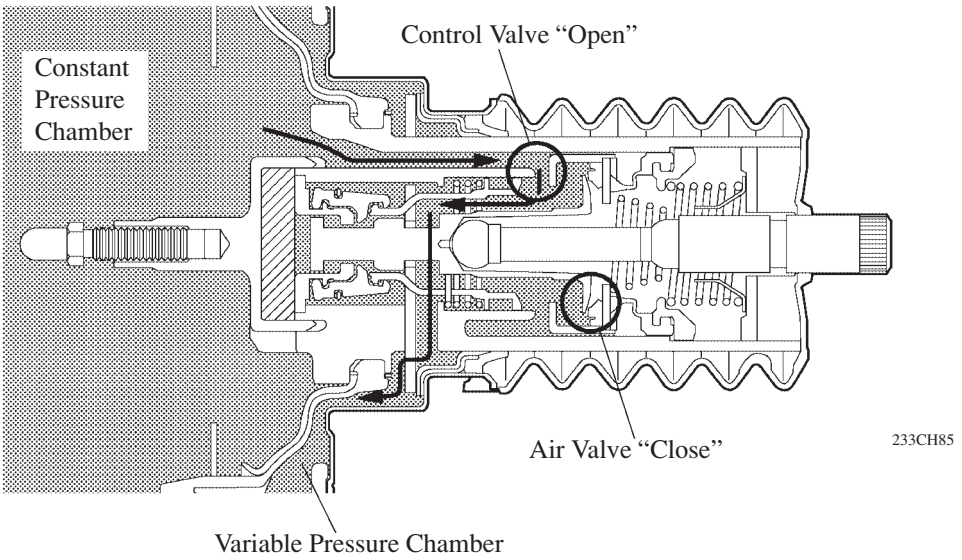

Normal Braking Condition (Operation Rod Speed = Power Piston Speed)

During normal braking, the air valve opens and the control valve closes to activate the brake booster function.

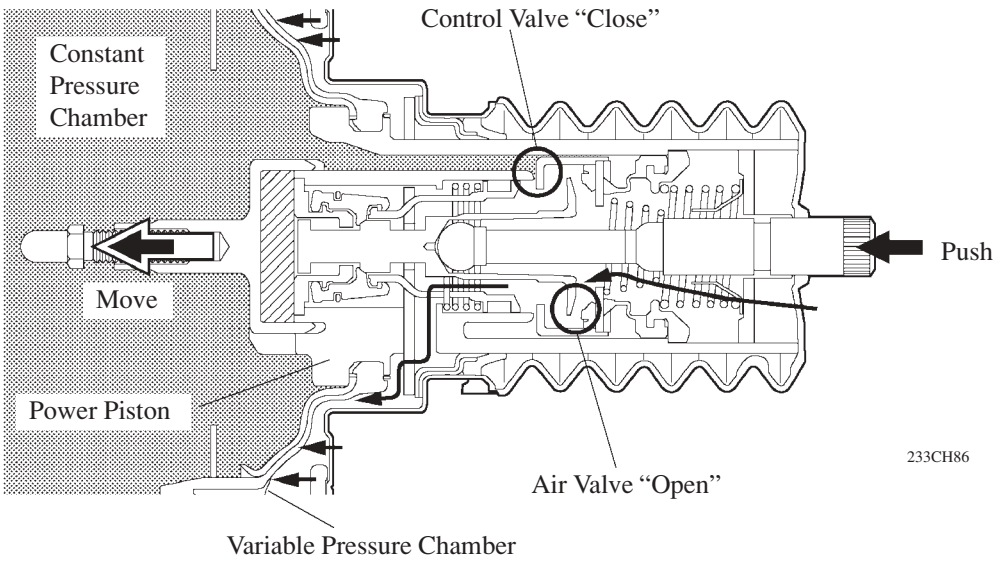

Brake Assist Condition (Operation Rod Speed > Power Piston Speed)

When the operation rod speed is faster than the power piston speed, the air valve pushes the slide valve hook. Consequently, the slide valve separates from the slide valve hook, the spring pushes the control valve, and the control valve closes. Thus, the opening of the air valve becomes enlarged and increases the volume of air that is introduced. This results in a brake assist force to powerfully push the power piston.

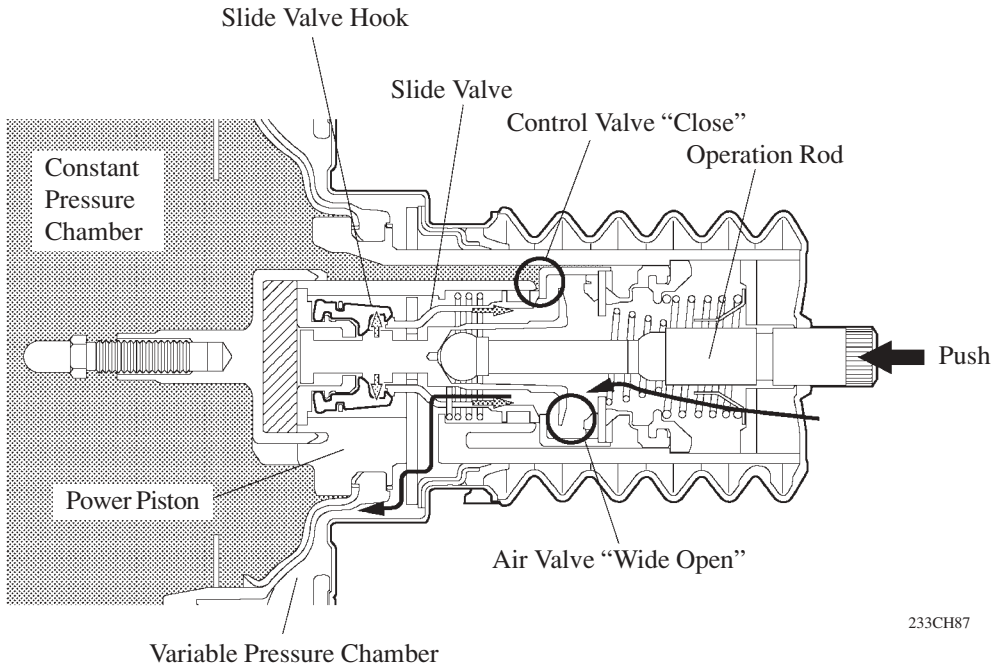

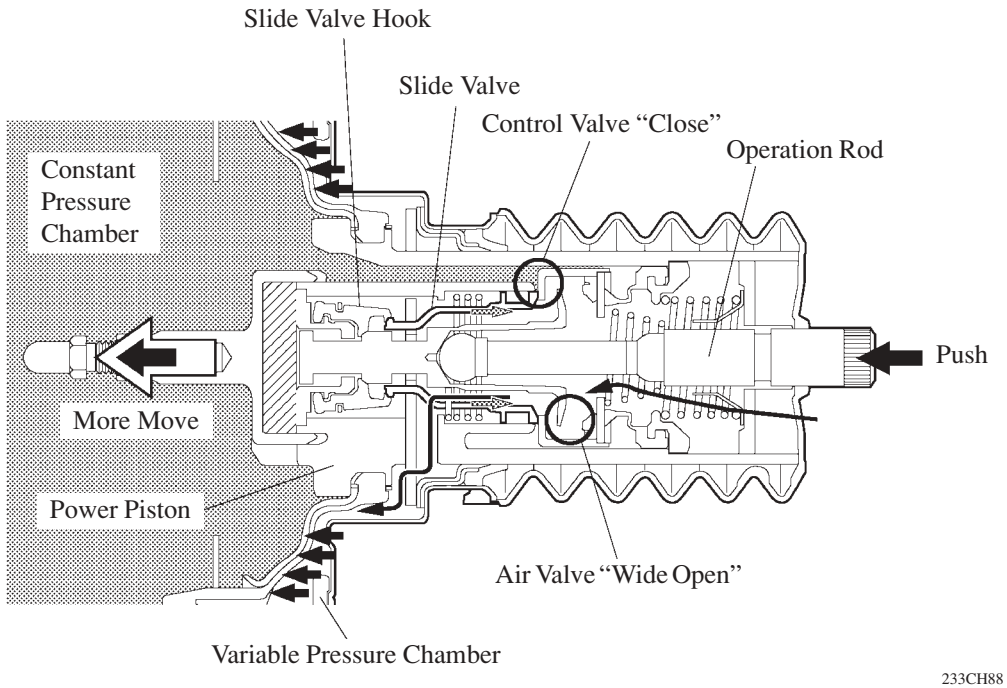

2. Brake Control System (ABS with EBD, Brake Assist, TRC and VSC)

General

- This model uses the CAN (Controller Area Network) communication system for communication between the skid control ECU, steering angle sensor and yaw rate & deceleration sensor.
- The "skid control ECU and brake actuator", and the "yaw rate sensor and deceleration sensor", are integrated units, respectively.
- A trochoid gear type pump has been adopted for the pump in the brake actuator.
- A pressure regulator valve has been adopted to regulate the pressure of the fluid that is supplied to the pump.

The brake control system (ABS with EBD, brake assist, TRC and VSC) has a following function:

Function	Outline
ABS (Anti-lock Brake System)	The ABS helps prevent the wheels from locking when the brakes are applied firmly or when braking on a slippery surface.
EBD (Electronic Brake force Distribution)	The EBD control utilizes ABS, realizing the proper brake force distribution between front and rear wheels in accordance with the driving conditions. In addition, during cornering braking, it also controls the brake forces of right and left wheels, helping to maintain the vehicle behavior.
Brake Assist	If the skid control ECU determines that the driver intends the emergency braking, the system activates the brake actuator to increase the brake fluid pressure, which increases the braking force.
TRC (Traction Control)	The TRC system helps prevent the drive wheels from slipping if the driver presses the accelerator pedal excessively when starting off or accelerating on a slippery surface.
VSC (Vehicle Stability Control)	The VSC system helps prevent the vehicle from slipping sideways as a result of strong front wheel skid or strong rear wheel skid during cornering.

Service Tip

When brake control system (ABS with EBD) is activated, the brake pedal could shudder, which is a normal occurrence of the system in operation and should not be considered a malfunction.

▶ System Diagram ◀

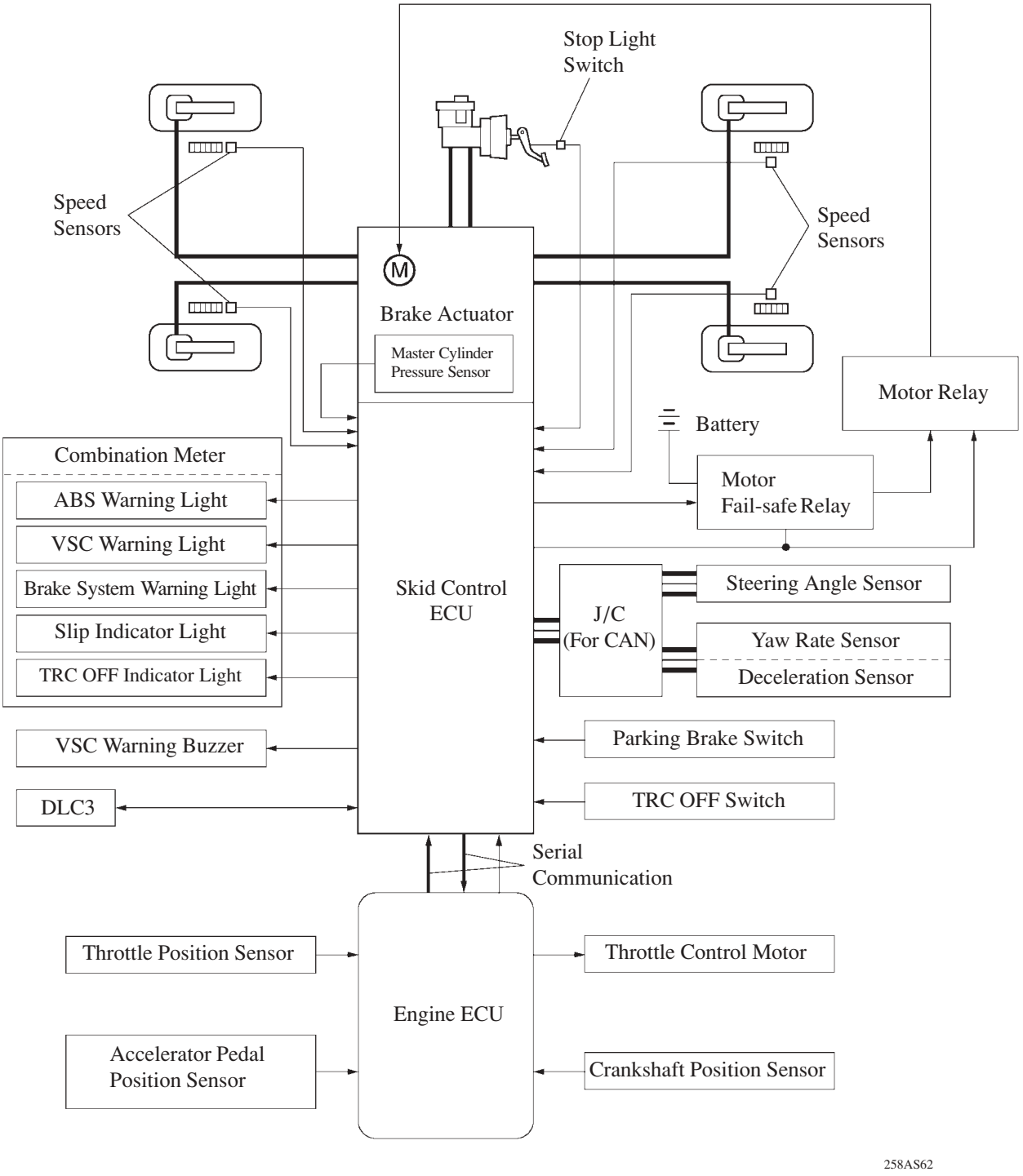

: CAN (Controller Area Network)

Outline of TRC System

- If the driver presses the accelerator pedal aggressively when starting off or accelerating on a slippery surface, the drive wheel could slip due to the excessive amount of torque that is generated. By applying hydraulic brake control to the drive wheels and regulating the throttle to control the engine output, the TRC system helps minimize the slippage of the drive wheels, thus generating the drive force that is appropriate for the road surface conditions.
- For example, a comparison may be made between two vehicles, one with the TRC system and the other without. If the driver of each vehicle operates the accelerator pedal in a rough manner while driving over a surface with different surface friction characteristics, the drive wheel on the slippery surface could slip as illustrated. As a result, the vehicle cannot start smoothly.
  However, when the vehicle is equipped with the TRC system, the skid control ECU instantly determines the state of the vehicle and operates the brake actuator in order to apply the brake of the slipping drive wheel. Furthermore, the engine ECU receives the signals from the skid control ECU and regulates the throttle in order to control the engine output. Thus, the system can help maintain a stable driving force.

▶ Driving Condition on Road with Different Surface Friction Characteristics ◀

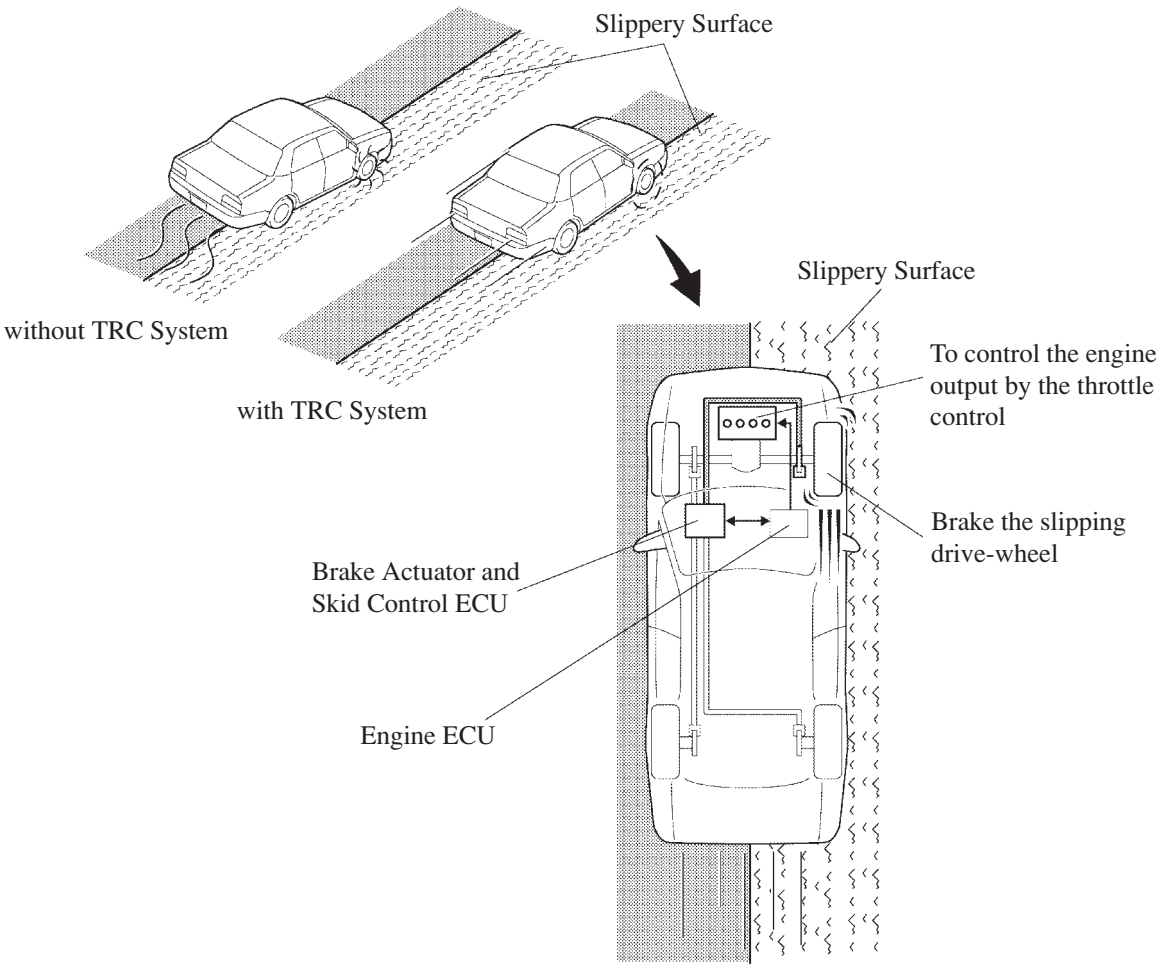

Outline of VSC System

1) General

The followings are two examples that can be considered as circumstances in which the tires exceed their lateral grip limit.
The VSC system is designed to help control the vehicle behavior by controlling the engine output and the brakes at each wheel when the vehicle is under one of the conditions indicated below.

- When the front wheels lose grip in relation to the rear wheels (front wheel skid tendency).
- When the rear wheels lose grip in relation to the front wheels (rear wheel skid tendency).

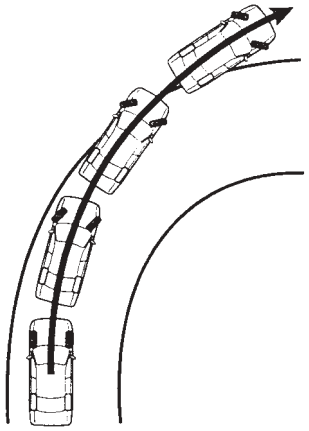

151CH17

Front Wheel Skid Tendency

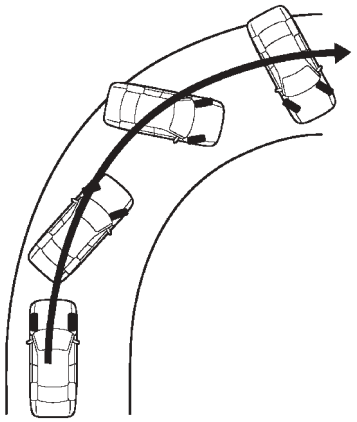

189CH100

Rear Wheel Skid Tendency

2) Method for Determining the Vehicle Condition

To determine the condition of the vehicle, sensors detect the steering angle, vehicle speed, vehicle's yaw rate, and the vehicle's lateral acceleration, which are then calculated by the skid control ECU.

Determining Front Wheel Skid

Whether or not the vehicle is in the state of front wheel skid is determined by the difference between the target yaw rate and the vehicle's actual yaw rate.
When the vehicle's actual yaw rate is smaller than the yaw rate (a target yaw rate that is determined by the vehicle speed and steering angle) that should be rightfully generated when the driver operates the steering wheel, it means the vehicle is making a turn at a greater angle than the locus of travel.
Thus, the skid control ECU determines that there is a large tendency to front wheel skid.

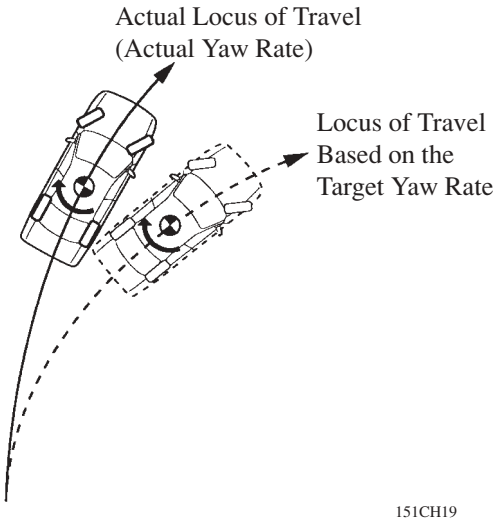

151CH19

Determining Rear Wheel Skid

Whether or not the vehicle is in the state of rear wheel skid is determined by the values of the vehicle's slip angle and the vehicle's slip angular velocity (time-dependent changes in the vehicle's slip angle).
When the vehicle's slip angle is large, and the slip angular velocity is also large, the skid control ECU determines that the vehicle has a large rear wheel skid tendency.

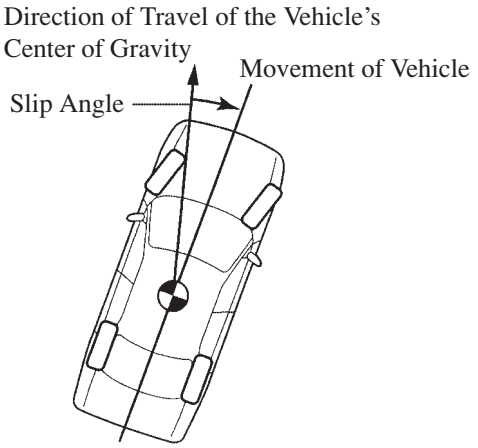

3) Method for VSC Operation

When the skid control ECU determines that the vehicle exhibits a tendency to front wheel skid or rear wheel skid, it decreases the engine output and applies the brake of a front or rear wheel to control the vehicle's yaw moment.
The basic operation of the VSC is described below. However, the control method differs depending on the vehicle's characteristics and driving conditions.

Dampening a Strong Front Wheel Skid

When the skid control ECU determines that there is a large front wheel skid tendency, it counteracts in accordance with the extent of that tendency. The skid control ECU controls the engine power output and applies the brakes of the front wheels and rear wheel of the inner circle of the turn in order to help restrain the front wheel skid tendency.

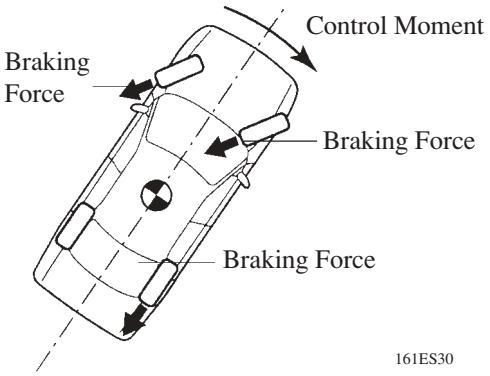

Making a Right Turn

Dampening a Strong Rear Wheel Skid

When the skid control ECU determines that there is a large rear wheel skid tendency, it counteracts in accordance with the extent of that tendency. It applies the brakes of the front wheel of the outer circle of the turn, and generates an outward moment of inertia in the vehicle, in order to help restrain the rear wheel skid tendency. Along with the reduction in the vehicle speed caused by the braking force, which helps dampen a strong rear wheel skid tendency.
In some cases, the skid control ECU applies the brake of the rear wheels, as necessary.

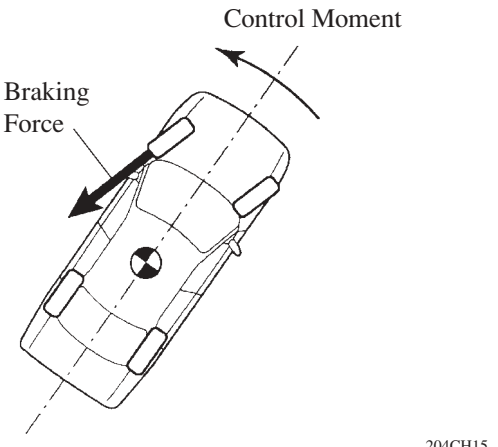

Making a Right Turn

Braking Control Under the Conditions in Which the Tires Do Not Exceed the Lateral Limitations of the Vehicle

1) During Cornering Braking

The VSC system determines the cornering conditions of the vehicle in accordance with the signals provided by the yaw rate & deceleration sensor, and the speed sensor. It determines the extent of the brake pedal application by the driver in accordance with the signals provided by the master cylinder pressure sensor.
When the vehicle is braking while cornering, the brake actuator increases the brake fluid pressure to the front outer wheel of the turn, and simultaneously controls the brake fluid pressure to the inner wheel of the turn. This generates a moment of inertia that inhibits the vehicle from veering further inward of the turn. As a result, this system provides the excellent vehicle stability and braking performance.

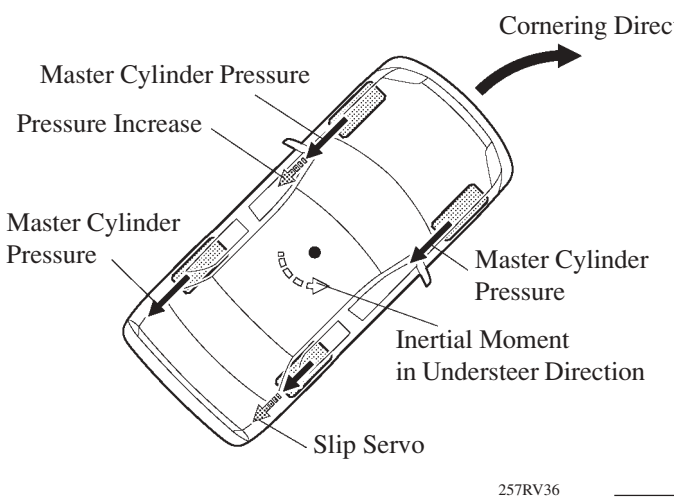

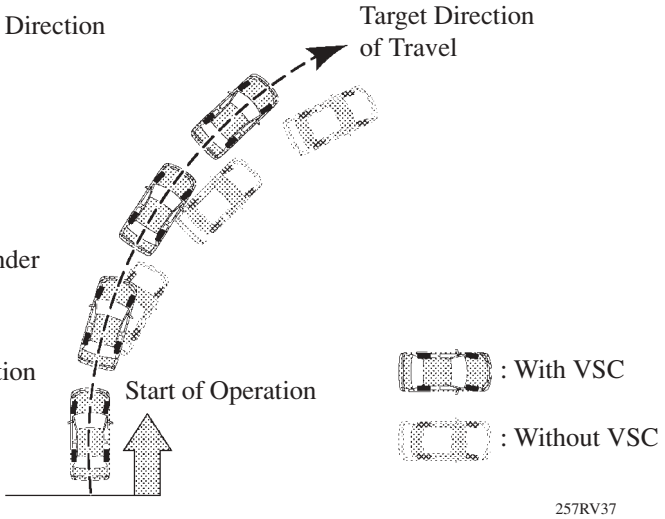

2) During High-Speed Straightline Braking

The VSC system determines the extent of the brake pedal application by the driver in accordance with the signals provided by the master cylinder pressure sensor and the high-speed driving conditions in accordance with the signals provided by the speed sensor.
When the fluid pressure in the master cylinder reaches a predetermined value while the vehicle is braking at a predetermined speed or higher, the system controls the brake fluid pressure applied to the rear wheels as a result of the driver's further application of the brake pedal. This helps suppress the slippage of the rear tires and provides the excellent stability of the vehicle.
To compensate for the reduction in the braking force due to the suppression of the fluid pressure to the rear brakes, the brake actuator increases the fluid pressure to the front wheel brakes, in order to provide the proper braking force required by the driver.

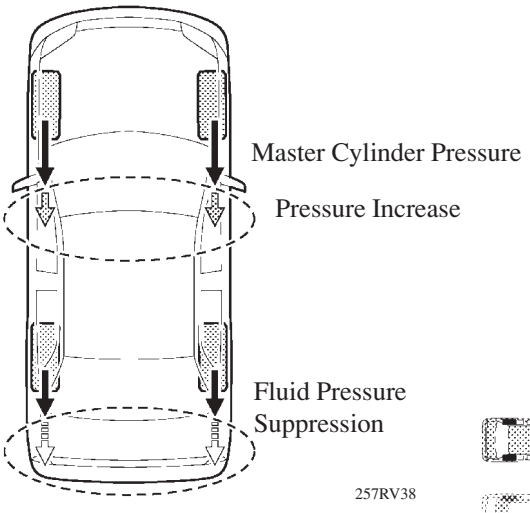

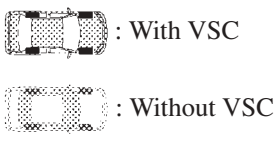

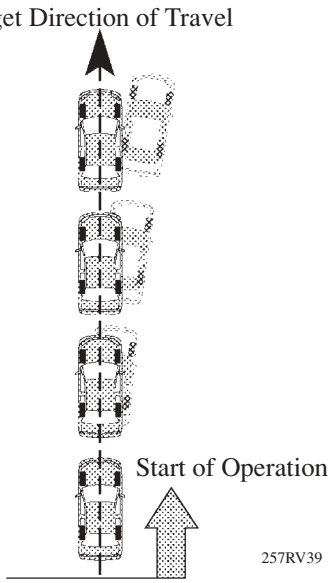

Layout of Main Components

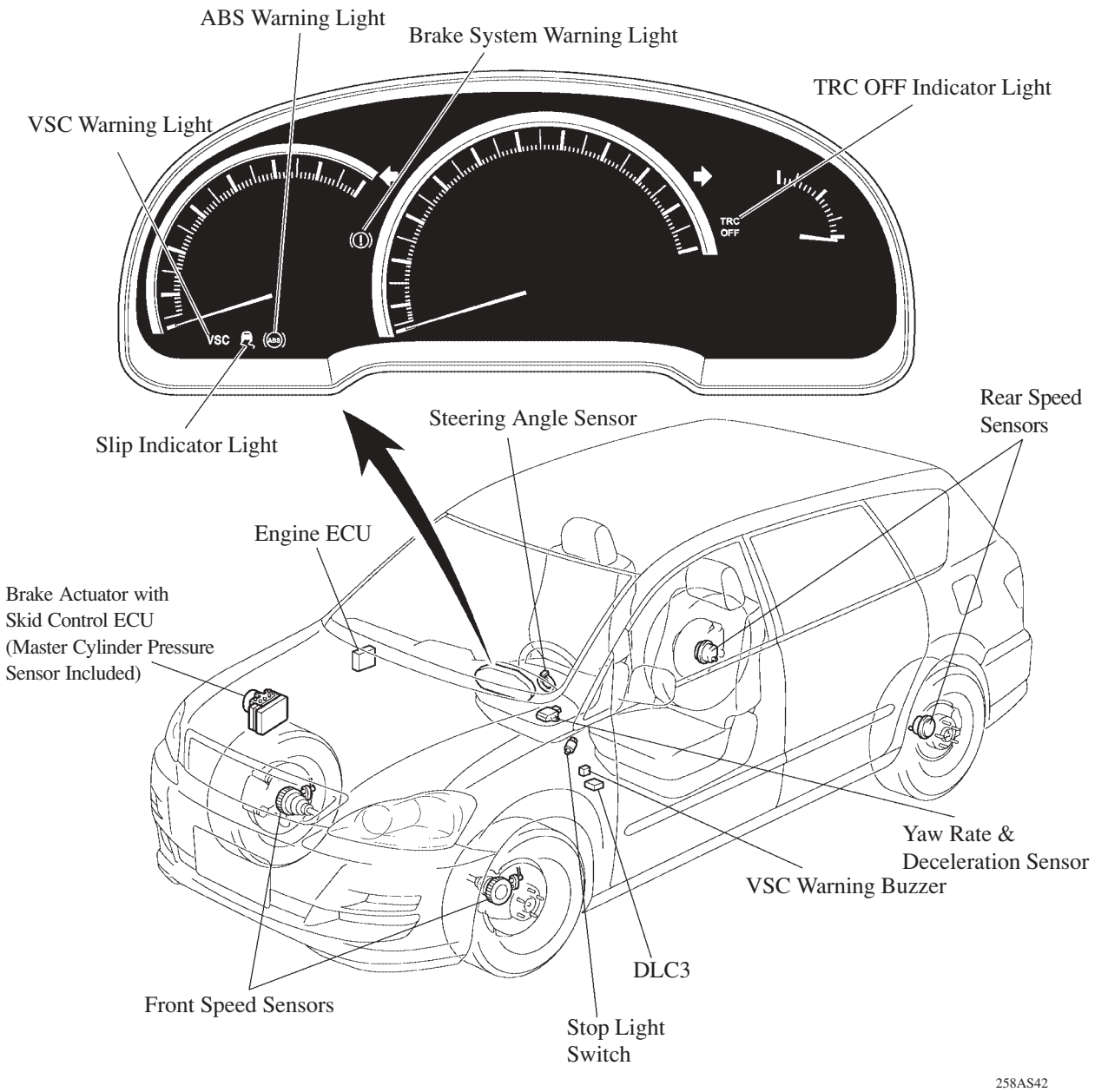

Function of Main Components

Components		Function
Brake Actuator		Changes the fluid path based on the signals from the skid control ECU during the operation of the ABS with EBD & Brake Assist & TRC & VSC system, in order to control the fluid pressure that is applied to the wheel cylinders.
	Skid Control ECU	Judges the vehicle driving condition based on signals from each sensor, and sends brake control signals to the brake actuator.
	Master Cylinder Pressure sensor	Assembled in the brake actuator and detects the master cylinder pressure.
Combination Meter	Brake System Warning Light	● Lights up to alert the driver when a malfunction occurs in the brake system. ● Lights up to alert the driver when the skid control ECU detects a malfunction in the EBD control. ● Light up to inform the driver when the parking brake pedal depressed. ● Light up to alert the driver when the brake fluid level decreased.
	ABS Warning Light	Lights up to alert the driver when the skid control ECU detects a malfunction in the ABS, EBD, or Brake Assist system.
	VSC Warning Light	Lights up to alert the driver when the skid control ECU detects a malfunction in the TRC and VSC.
	TRC OFF Indicator Light	● Lights up to inform the driver when the TRC system is turned OFF by the TRC OFF switch. ● Lights up to alert the driver when the skid control ECU detects a malfunction in the TRC or VSC.
	Slip Indicator Light	Blinks to inform the driver when the TRC and VSC is operated.
Speed Sensor (FL, FR, RL, RR)		Detects the wheel speed of each wheels.
Steering Angle Sensor		Detects the steering direction and angle of the steering wheel.
Yaw Rate & Deceleration Sensor		● Detects the vehicle's yaw rate. ● Detects the vehicle's longitudinal and lateral acceleration.
Stop Light Switch		Detects the brake pedal depressing signal.
TRC OFF Switch		Cancels the TRC operation only: it does not apply to other systems.
VSC Warning Buzzer		This buzzer sounds intermittently to inform the driver that the VSC is actives.
Engine ECU		Controls the throttle valve opening angle based on the signals receives from the skid control ECU, in order to control the engine output. Also, sends the throttle valve opening angle signal, accelerator pedal position signal, and engine speed signal to the skid control ECU.
Throttle Position Sensor		● Detects the opening of the throttle valve and inputs it into the engine ECU. ● This sensor is used to control the engine output when the TRC or VSC is operated.
Accelerator Pedal Position Sensor		● Detects the depressing of the accelerator pedal and inputs it into the engine ECU. ● This sensor is used to control the engine output when the TRC or VSC is operated.
Crankshaft Position Sensor		● Detects the engine speed, and sends it via the engine ECU to the skid control ECU. ● This sensor is used to control the engine output when the TRC or VSC is operated.
Throttle Control Motor		Controls the opening of the throttle valve in accordance with the signals received from the engine ECU.

Construction

1) Brake Actuator

a. General

- The brake actuator consists of 10 two-position solenoid valves, 2 pressure regulator valves, 1 pump motor, 2 trochoid gear type pump, 2 reservoirs, and master cylinder pressure sensor.
  The 10 two-position solenoid valves consist of the following:

– 2 master cylinder cut solenoid valves (linear type) [(1), (2)]
– 4 pressure holding solenoid valves [(3), (4), (5), (6)]
– 4 pressure reduction solenoid valves [(7), (8), (9), (10)]

▶ Hydraulic Circuit ◀

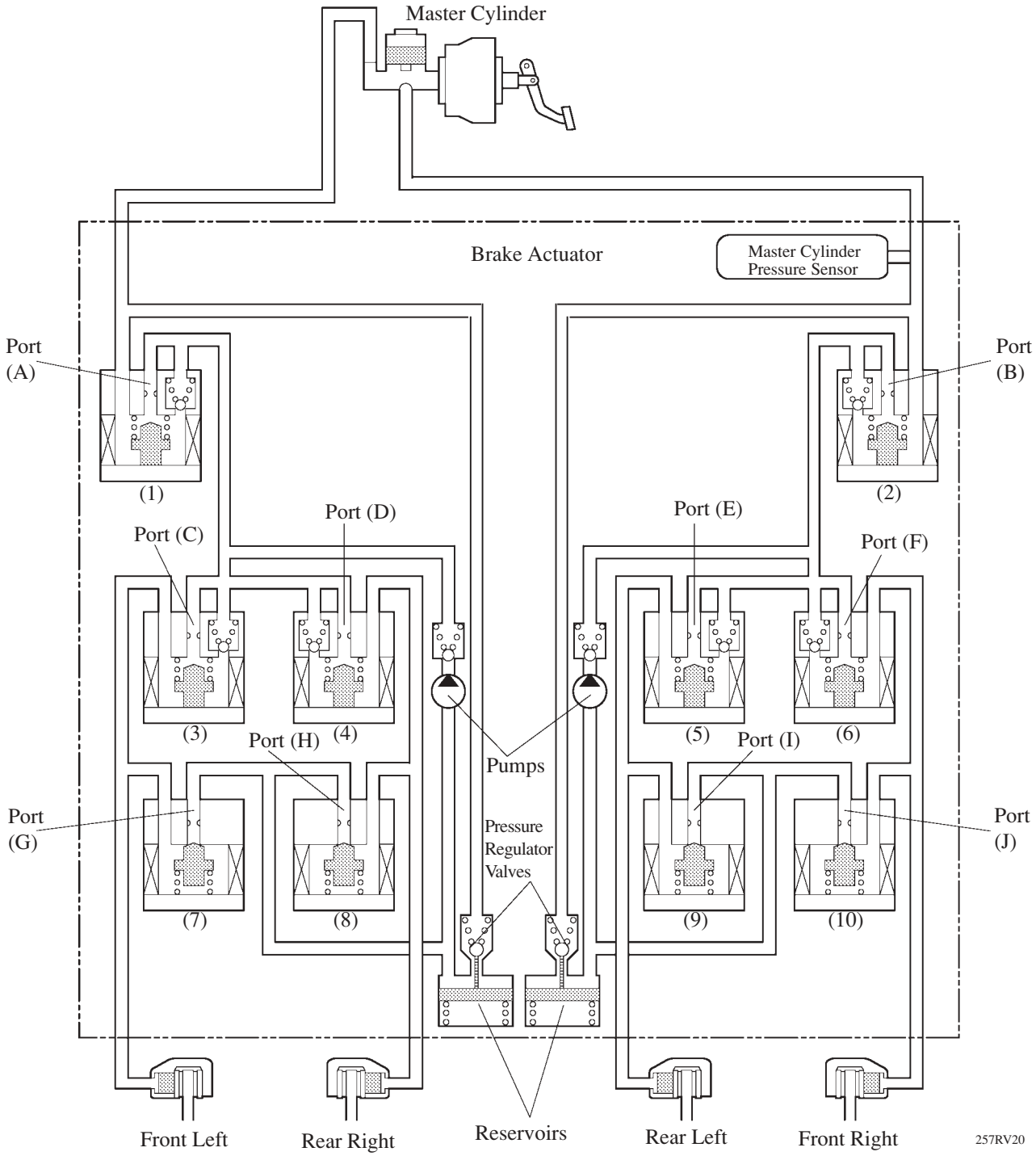

▶ Function of Main Components ◀

Component		Function
(1), (2)	Master Cylinder Cut Solenoid Valve (Linear Type)	To effect the respective brake controls of the brake assist, TRC, and VSC system, a combination of the ON/OFF conditions of the master cylinder cut solenoid valve is used to appropriately vary the fluid pressure.
(3), (4), (5), (6)	Pressure Holding Valve	Each wheel cylinder contains a pressure holding solenoid valve and a pressure reduction solenoid valve. A combination of the ON/OFF conditions of the respective valves is used in order to change the increase mode, holding mode, or the reduction mode during the operation of the ABS, TRC, and VSC system.
(7), (8), (9), (10)	Pressure Reduction Valve	
Master Cylinder Pressure Sensor		The master cylinder pressure sensor converts the brake fluid pressure that the master cylinder applies to the brake actuator into an electrical signal and sends it to the skid control ECU. The skid control ECU can thus monitor the brake fluid pressure that is applied to the brake actuator in accordance with this signal.
Reservoir		While effecting the reduction mode during the operation of the ABS, TRC, and VSC system, the reservoir stores the brake fluid that has returned from the wheel cylinders. It also functions as an accumulator.
Pump		Pumps the brake fluid that is stored in the reservoir and returns it to the master cylinder. While effecting the increase mode during the operating of the brake assist, TRC and VSC system, the pump operates in order to apply brake fluid pressure to the wheel cylinders.
Pressure Regulator Valve		Regulates the pressure of the fluid supplied to the pump, and closes the pressure passage between the master cylinder and the pump when the brake pedal is depressed.

b. Pump and Reservoir

- The trochoid gear type pump has been newly adopted to reduce operating noise.

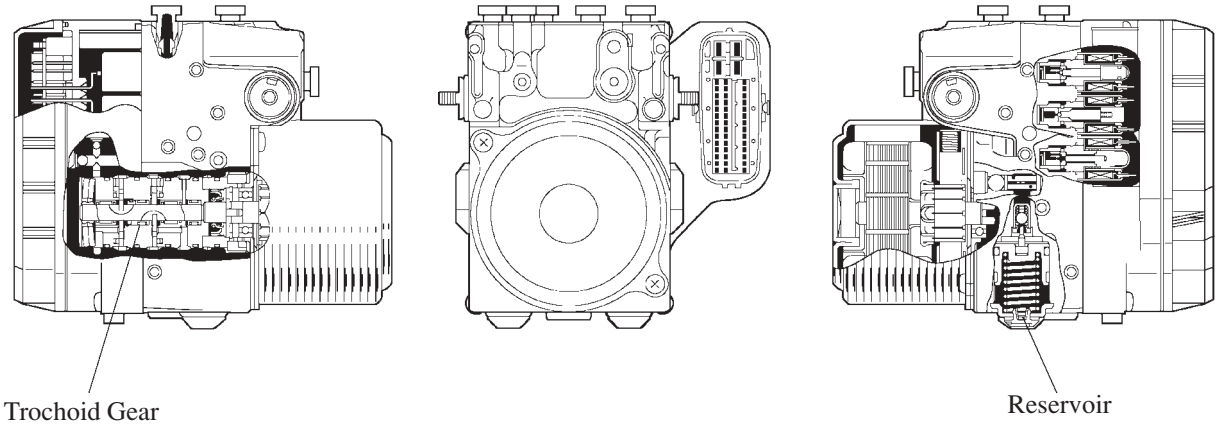

241CH59

- The pressure regulator valve has been adopted in the reservoir for the purpose of regulating the pressure of the fluid to be supplied to the pump and to close the passage between the pump and the master cylinder during braking.

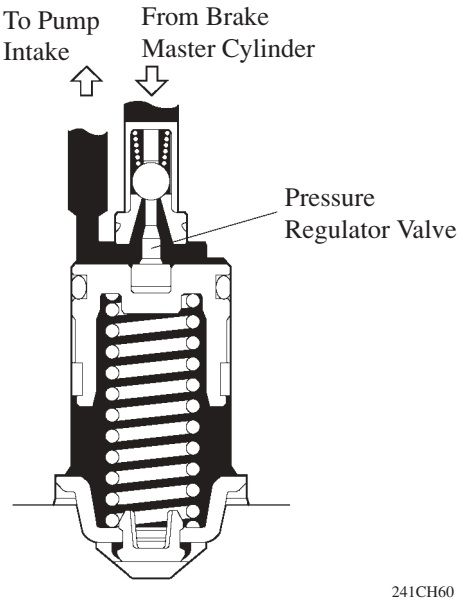

241CH60

Reservoir Cross Section

Brake Assist Operation

In the event of emergency braking, the skid control ECU detects the driver's intention based on the speed of the pressure increase in the master cylinder determined by the pressure sensor signal. If the ECU judges the need for the additional brake assist, the fluid pressure is generated by the pump in the actuator and directed to the wheel cylinder to apply a greater fluid pressure than the master cylinder.

▶ System Diagram ◀

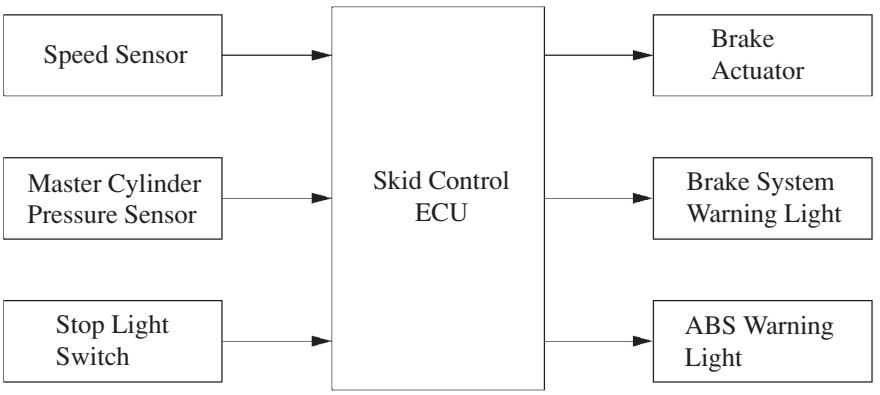

258AS53

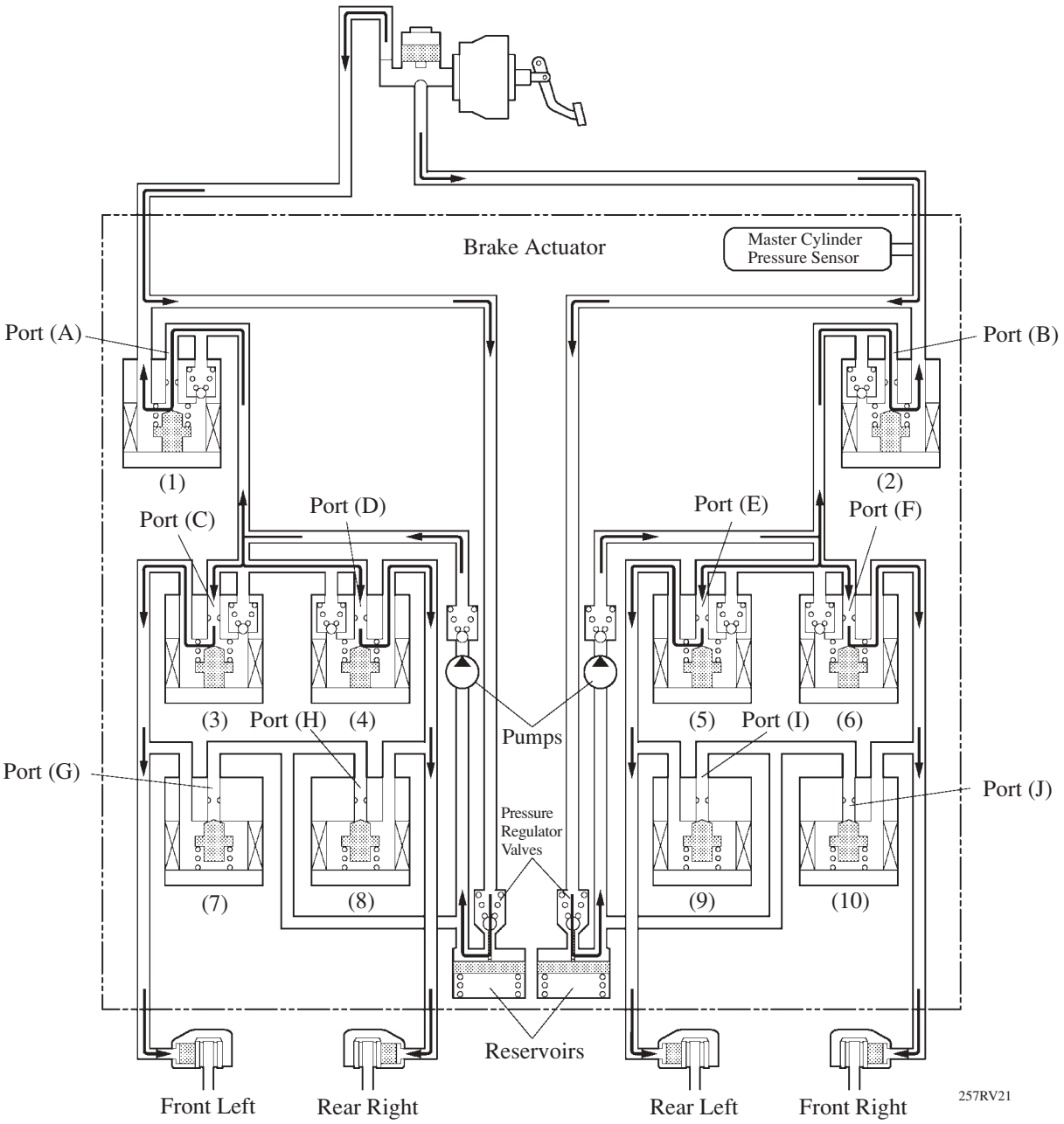

Brake Assist Activated

Item		Brake Assist Not Activated	Brake Assist Activated
(1), (2)	Master Cylinder Cut Solenoid Valve	OFF (Open)	ON*
	Port: (A), (B)		
(3), (4), (5), (6)	Pressure Holding Solenoid Valve	OFF (Open)	OFF (Open)
	Port: (C), (D), (E), (F)		
(7), (8), (9), (10)	Pressure Reduction Solenoid Valve	OFF (Close)	OFF (Close)
	Port: (G), (H), (I), (J)		

*: The solenoid valve controls the hydraulic pressure between "open" and "close" according to the operating condition by adjusting continually.

TRC Operation

The fluid pressure generated by the pump is regulated by the master cylinder cut solenoid valve to the required pressure. Thus, the wheel cylinders of the drive wheels are controlled in the following 3 modes: pressure reduction, pressure holding, and pressure increase modes, to control the slippage of the drive wheels.

The diagram below shows the hydraulic circuit in the pressure increase mode when the TRC system is activated.

The pressure holding solenoid valve and the pressure reduction solenoid valve are turned ON/OFF according to the ABS operation pattern described on the previous page.

▶ System Diagram ◀

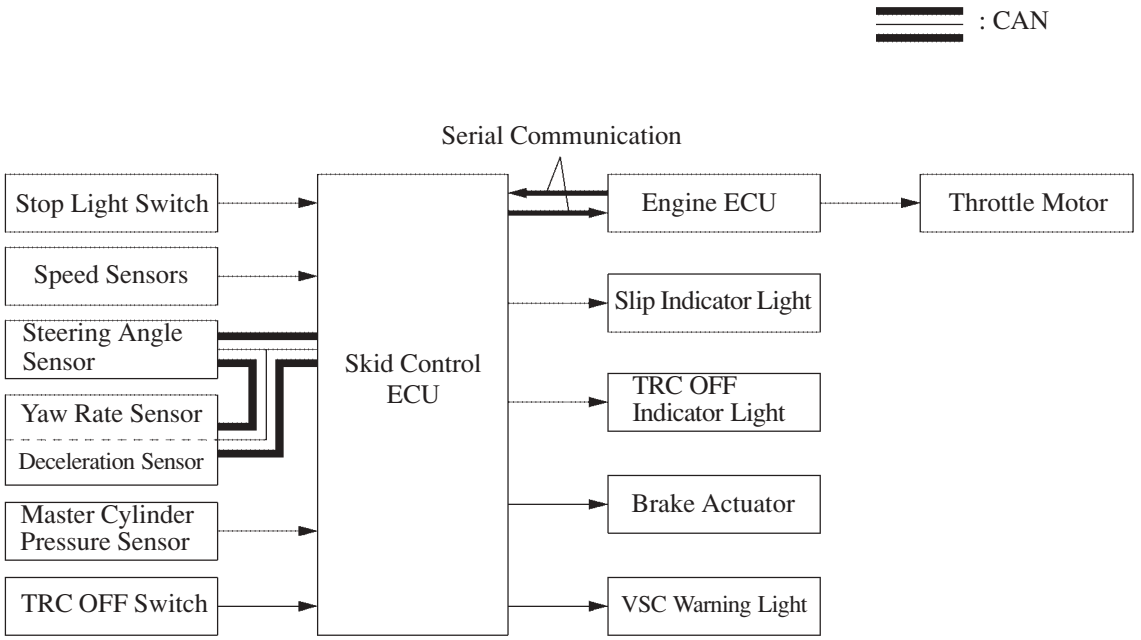

257RV22

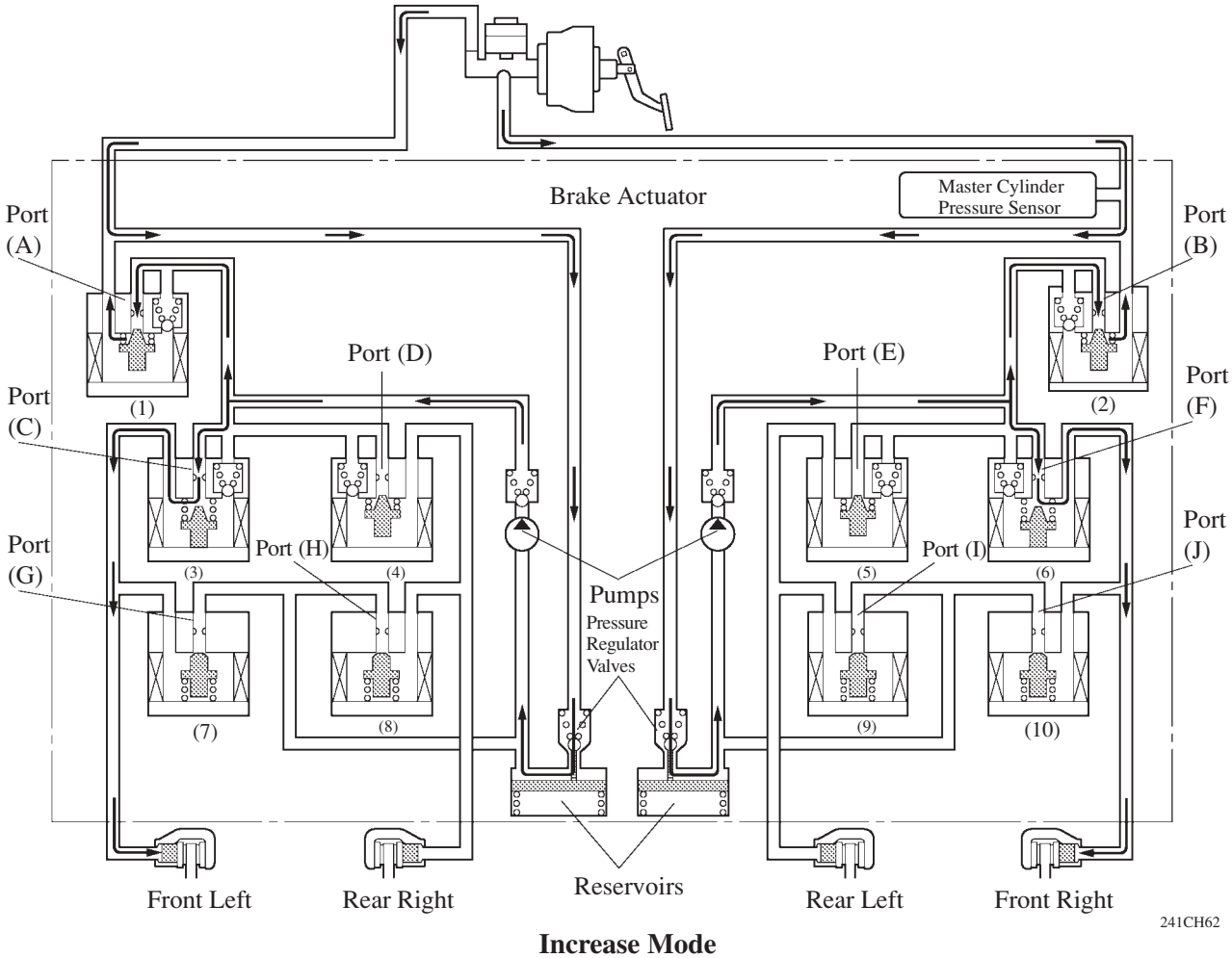

Increase Mode

Item			TRC not Activated	TRC Activated		
				Increase Mode	Holding Mode	Reduction Mode
(1), (2)	Master Cylinder Cut Solenoid Valve		OFF (Open)	ON*	ON*	ON*
	Port: (A), (B)					
Front Brake	(3), (6)	Pressure Holding Valve	OFF (Open)	OFF (Open)	ON (Close)	ON (Close)
		Port: (C), (F)				
	(7), (10)	Pressure Reduction Valve	OFF (Close)	OFF (Close)	OFF (Close)	ON (Open)
		Port: (G), (J)				
	Wheel Cylinder Pressure		—	Increase	Holding	Reduce
Rear Brake	(4), (5)	Pressure Holding Valve	OFF (Open)	ON (Close)	ON (Close)	ON (Close)
		Port: (D), (E)				
	(8), (9)	Pressure Reduction Valve	OFF (Close)	OFF (Close)	OFF (Close)	OFF (Close)
		Port: (H), (I)				
	Wheel Cylinder Pressure		—	—	—	—

*: The solenoid valve controls the hydraulic pressure between "open" and "close" according to the operating condition by adjusting continually.

4

VSC Operation

1) General

The VSC system, by way of solenoid valves, controls the fluid pressure that is generated by the pump and applies it to the brake wheel cylinder of each wheel in the following 3 modes: pressure reduction, pressure holding, and pressure increase modes. As a result, the tendency to front wheel skid or rear wheel skid is controlled.

▶ System Diagram ◀

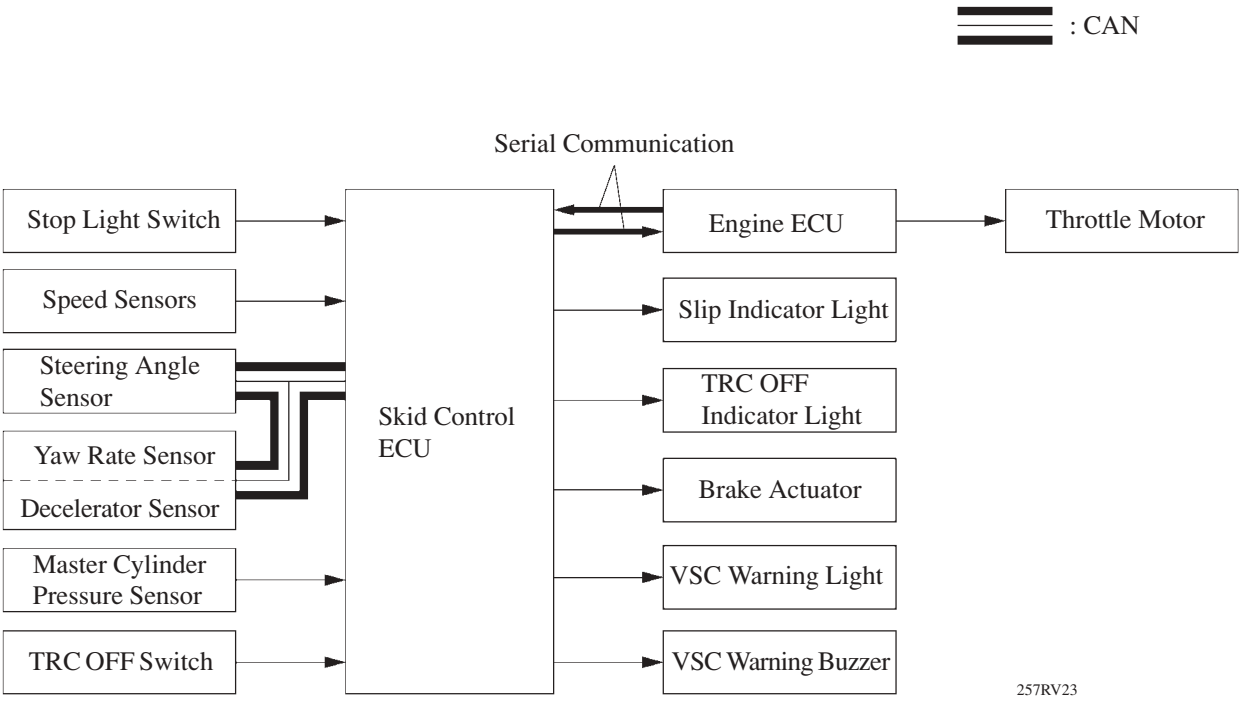

2) Front Wheel Skid Control (Turn to the Right)

In the front wheel skid control, the brakes of the front wheels and the rear wheel of the inner circle of the turn are applied.

Also, depending on whether the brake is ON or OFF and the condition of the vehicle, there are circumstances in which the brake might not be applied to the wheels even if those wheels are targeted for braking.

The diagram below shows the hydraulic circuit in the pressure increase mode, as it controls the front wheel skid condition while the vehicle makes a right turn.

The pressure holding solenoid valve and the pressure reduction solenoid valve are turned ON/OFF according to the ABS operation pattern.

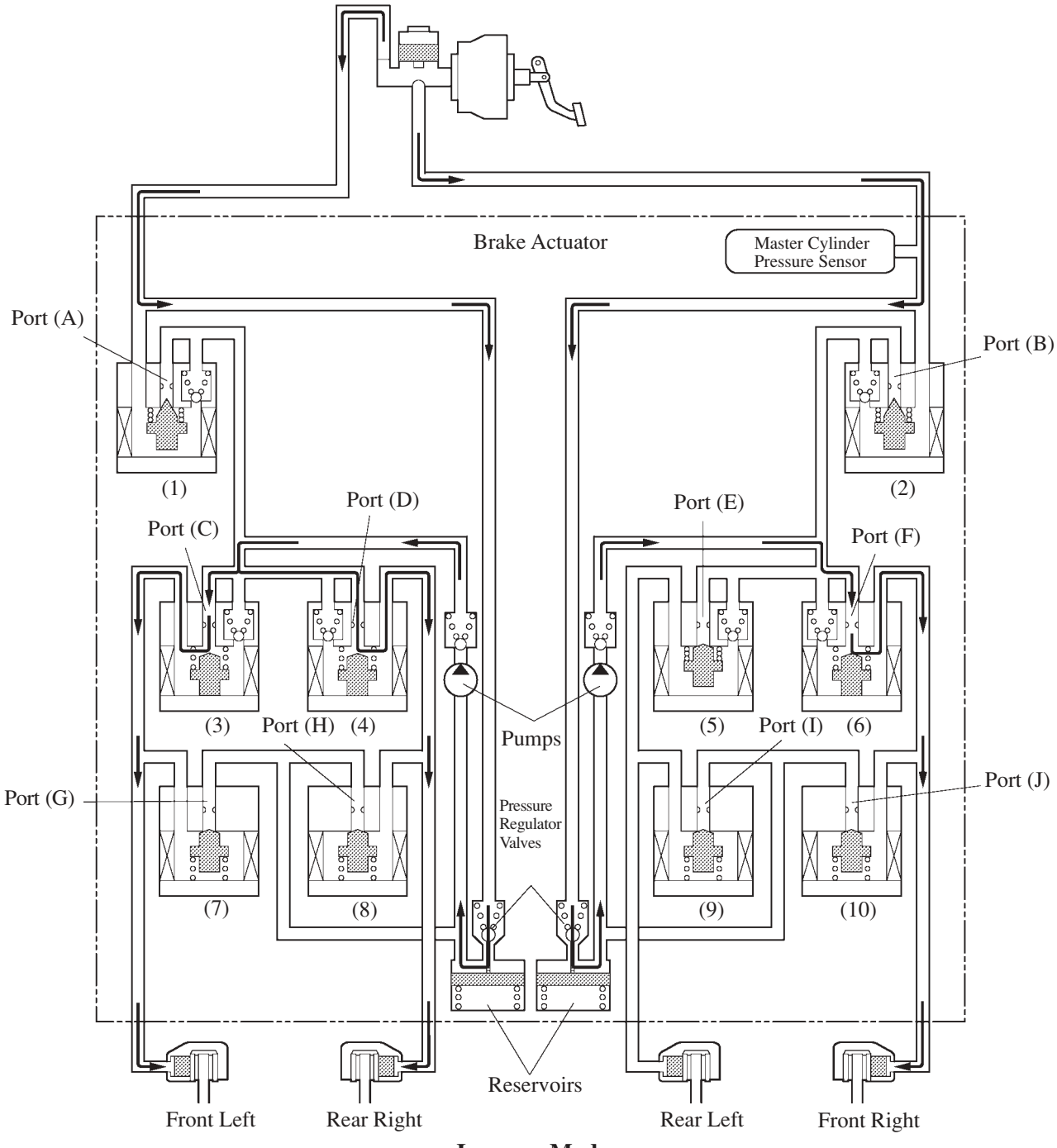

Increase Mode

258AS54

Item			VSC not Activated	VSC Activated		
				Increase Mode	Holding Mode	Reduction Mode
(1), (2)	Master Cylinder Cut Solenoid Valve Port: (A), (B)		OFF (Open)	ON	ON	ON
Front Brake	(3)	Pressure Holding Solenoid Valve Port: (C)	OFF (Open)	OFF (Open)	ON (Close)	ON (Close)
	(6)	Pressure Holding Solenoid Valve Port: (F)	OFF (Open)	OFF (Open)	ON (Close)	ON (Close)
	(7)	Pressure Reduction Solenoid Valve Port: (G)	OFF (Close)	OFF (Close)	OFF (Close)	ON (Open)
	(10)	Pressure Reduction Solenoid Valve Port: (J)	OFF (Close)	OFF (Close)	OFF (Close)	ON (Open)
	Wheel Cylinder Pressure	Right	—	Increase	Holding	Reduce
		Left	—	Increase	Holding	Reduce
Rear Brake	(4)	Pressure Holding Solenoid Valve Port: (D)	OFF (Open)	OFF (Open)	ON (Close)	ON (Close)
	(5)	Pressure Holding Solenoid Valve Port: (E)	OFF (Open)	ON (Close)	ON (Close)	ON (Close)
	(8)	Pressure Reduction Solenoid Valve Port: (H)	OFF (Close)	OFF (Close)	OFF (Close)	ON (Open)
	(9)	Pressure Reduction Solenoid Valve Port: (I)	OFF (Close)	OFF (Close)	OFF (Close)	OFF (Close)
	Wheel Cylinder Pressure	Right	—	Increase	Holding	Reduce
		Left	—	—	—	—

3) Rear Wheel Skid Control (Turn to the Right)

In rear wheel skid control, the brake of the front wheel of the outer circle of the turn is applied. As an example, the diagram below shows the hydraulic circuit in the pressure increase mode, as it controls the rear wheel skid condition while the vehicle make a right turn.

As in front wheel skid control the pressure holding solenoid valve and the pressure reduction solenoid valve are turned ON/OFF according to the ABS operating pattern.

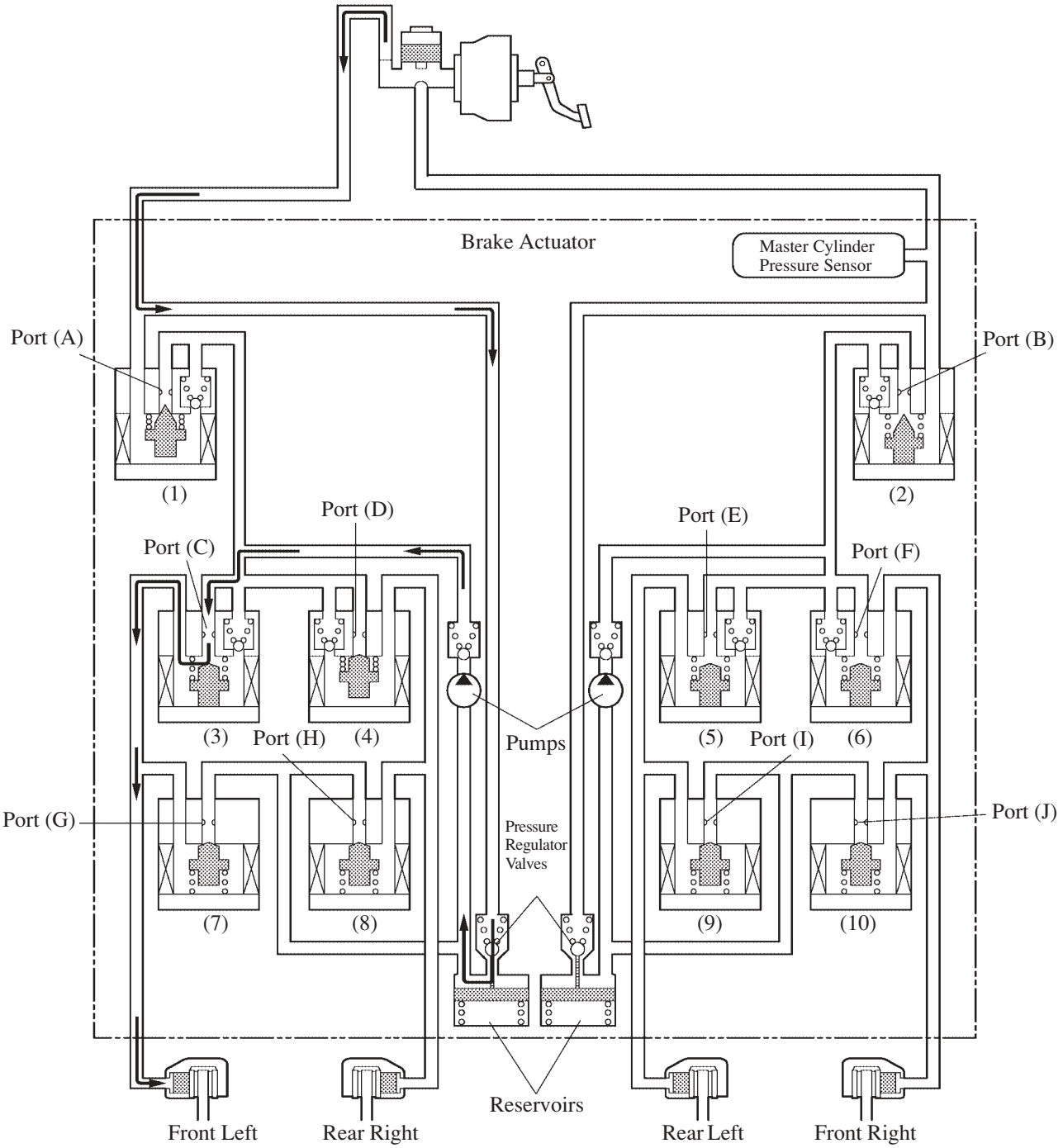

Increase Mode

258AS55

Item			VSC not Activated	VSC Activated		
				Increase Mode	Holding Mode	Reduction Mode
(1)	Master Cylinder Cut Solenoid Valve		OFF (Open)	ON (Close)	ON (Close)	ON (Close)
	Port: (A)					
(2)	Master Cylinder Cut Solenoid Valve		OFF (Open)	OFF (Open)	OFF (Open)	OFF (Open)
	Port: (B)					
Front Brake	(3)	Pressure Holding Solenoid Valve	OFF (Open)	OFF (Open)	ON (Close)	ON (Close)
		Port: (C)				
	(6)	Pressure Holding Solenoid Valve	OFF (Open)	OFF (Open)	OFF (Open)	OFF (Open)
		Port: (F)				
	(7)	Pressure Reduction Solenoid Valve	OFF (Close)	OFF (Close)	OFF (Close)	ON (Open)
		Port: (G)				
	(10)	Pressure Reduction Solenoid Valve	OFF (Close)	OFF (Close)	OFF (Close)	OFF (Close)
		Port: (J)				
	Wheel Cylinder Pressure	Right	—	—	—	—
		Left	—	Increase	Holding	Reduce
Rear Brake	(4)	Pressure Holding Solenoid Valve	OFF (Open)	ON (Close)	ON (Close)	ON (Close)
		Port: (D)				
	(5)	Pressure Holding Solenoid Valve	OFF (Open)	ON (Close)	ON (Close)	ON (Close)
		Port: (E)				
	(8)	Pressure Reduction Solenoid Valve	OFF (Close)	OFF (Close)	OFF (Close)	OFF (Close)
		Port: (H)				
	(9)	Pressure Reduction Solenoid Valve	OFF (Close)	OFF (Close)	OFF (Close)	OFF (Close)
		Port: (I)				
	Wheel Cylinder Pressure	Right	—	—	—	—
		Left	—	—	—	—

4) Control During Cornering Braking (Turn to the Right)

During cornering braking, the pressure holding valve (3), and the pressure reduction valve (7) are inactive. However, because the pump is operating, the brake fluid pressure in the left front wheel cylinder increases. At the same time, the pressure holding valve (4) and the pressure reduction valve (8) turn ON and OFF in the pressure increase, pressure holding, and pressure reduction modes, in order to control the brake fluid pressure applied to the right rear wheel cylinder.

The master cylinder cut solenoid valve (2) regulates the master cylinder fluid pressure applied to the right front wheel cylinder and the left rear wheel cylinder. Because the pressure holding valves (5) and (6) and the pressure reduction valves (9) and (10) are inactive at this time, the master cylinder fluid pressure acts on the right front wheel cylinder and the left rear wheel cylinder.

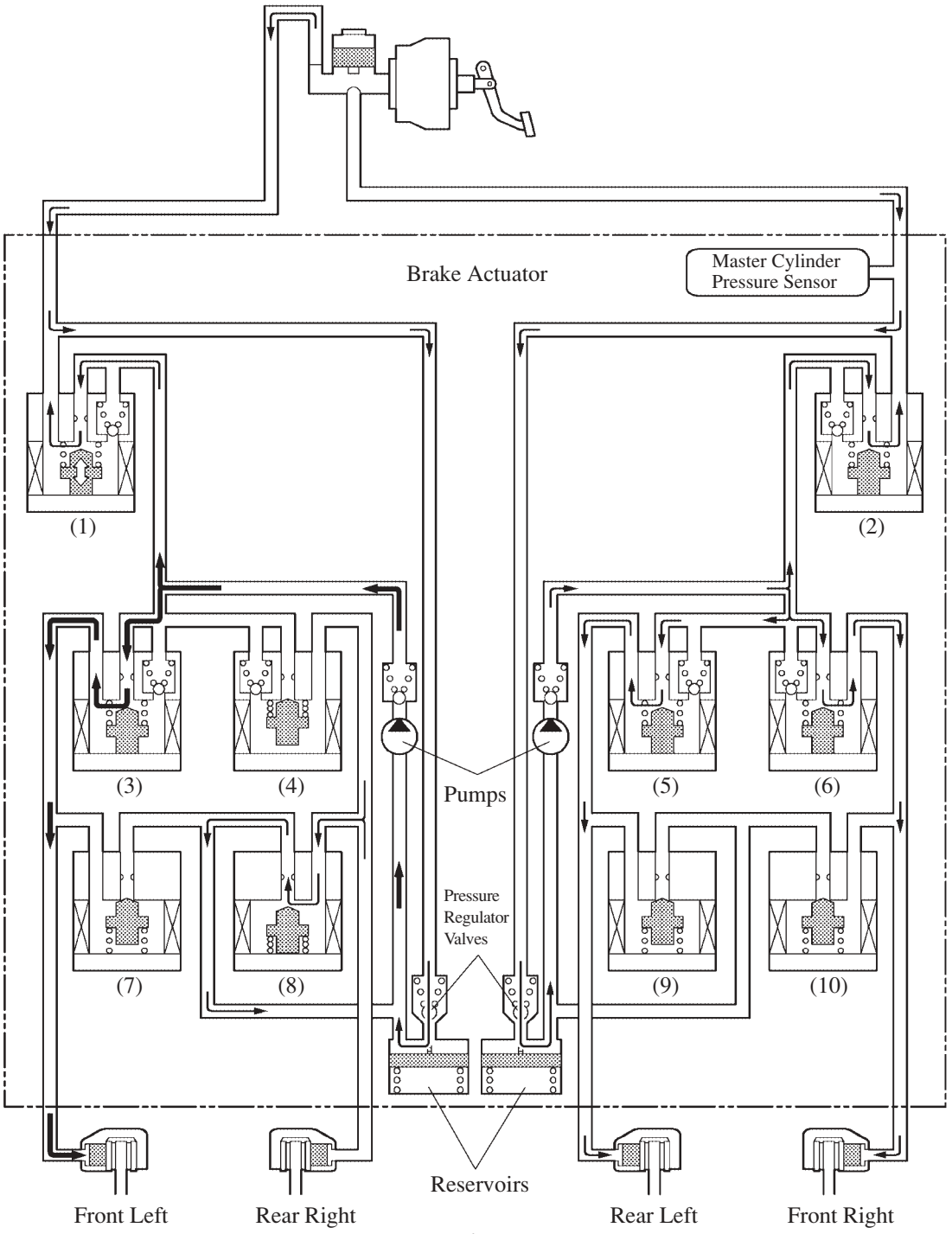

Reduction Mode

258AS56

Item			VSC Activated		
			Increase Mode	Holding Mode	Reduction Mode
(1)	Master Cylinder Cut Solenoid Valve		ON*1	ON*1	ON*1
(2)	Master Cylinder Cut Solenoid Valve		—*2	—*2	—*2
Front Brake	(3)	Pressure Holding Solenoid Valve	—*2	—	—
	(6)	Pressure Holding Solenoid Valve	—*2	—	—
	(7)	Pressure Reduction Solenoid Valve	—*2	—	—
	(10)	Pressure Reduction Solenoid Valve	—*2	—	—
	Wheel Cylinder Pressure	Right	—*3	—	—
		Left	Increase	—	—
Rear Brake	(4)	Pressure Holding Solenoid Valve	OFF (Open)	ON (Close)	ON (Close)
	(5)	Pressure Holding Solenoid Valve	—*1	—*1	—*1
	(8)	Pressure Reduction Solenoid Valve	OFF (Close)	OFF (Close)	ON (Open)
	(9)	Pressure Reduction Solenoid Valve	—*1	—*1	—*1
	Wheel Cylinder Pressure	Right	Increase	Holding	Reduce
		Left	—*3	—*3	—*3

*1: The solenoid valve controls the hydraulic pressure between “open” and “close” according to the operating condition by adjusting continually.

*2: Indicates an inactive condition.

*3: The master cylinder pressure acts on it.

5) Control During High-Speed

During high-speed braking, the system turns ON/OFF (pressurization/depressurization) the pressure holding valves (4) and (5), and the pressure reduction valves (8) and (9) depend on the vehicle condition. Because the pressure holding valves (3) and (6) and the pressure reduction valves (7) and (10) are inactive (the pressure holding valves are ON and the pressure reduction valves are OFF) at this time, the pump increases the fluid pressure of braking force, which is corresponded to the fluid pressure reduced at the rear wheel cylinders, in the front wheel cylinder.

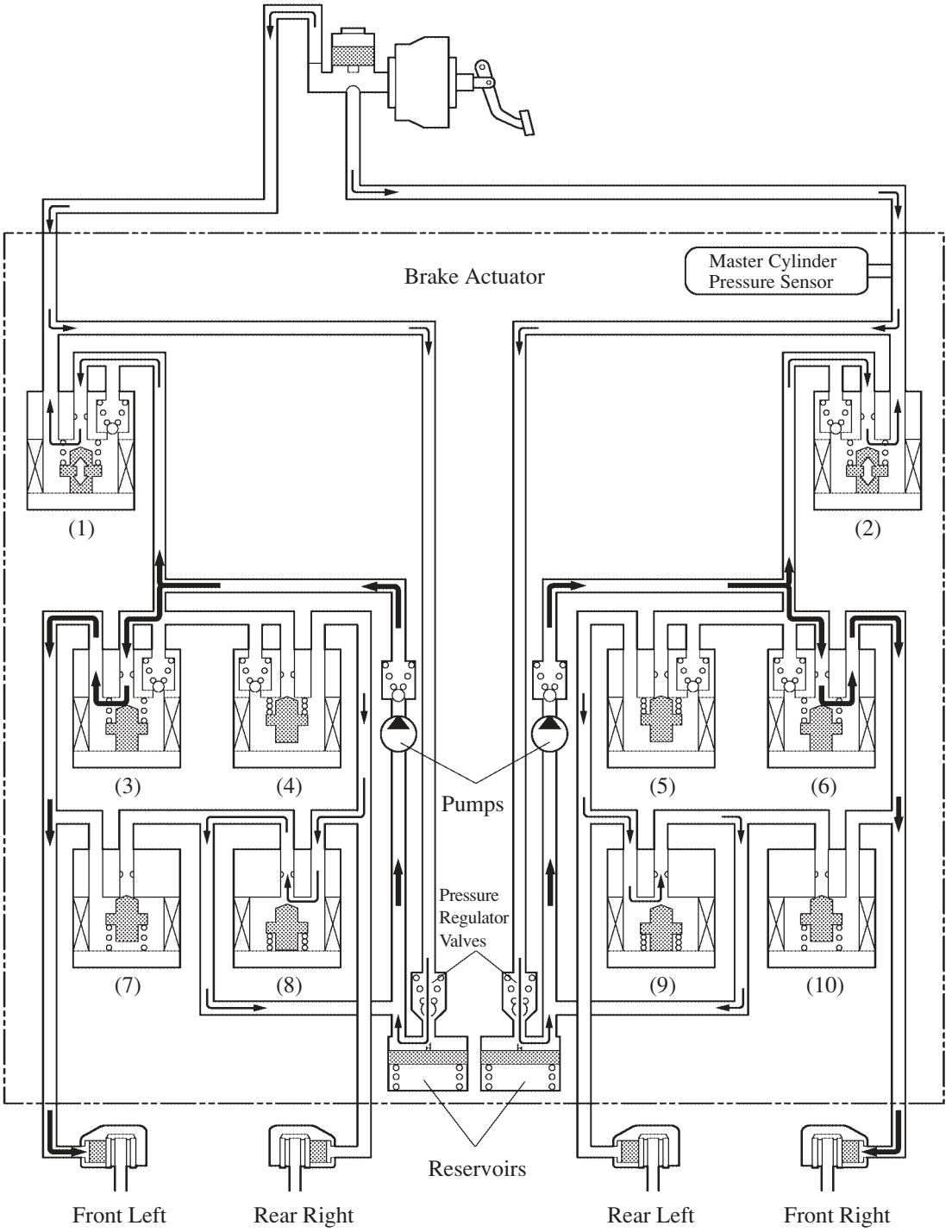

Reduction Mode

257RV43

Item			VSC Activated		
			Increase Mode	Holding Mode	Reduction Mode
(1)	Master Cylinder Cut Solenoid Valve		ON*1	ON*1	ON*1
(2)	Master Cylinder Cut Solenoid Valve		ON*1	ON*1	ON*1
Front Brake	(3)	Pressure Holding Solenoid Valve	—*2	—	—
	(6)	Pressure Holding Solenoid Valve	—*2	—	—
	(7)	Pressure Reduction Solenoid Valve	—*2	—	—
	(10)	Pressure Reduction Solenoid Valve	—*2	—	—
	Wheel Cylinder Pressure	Right	Increase	—	—
		Left	Increase	—	—
Rear Brake	(4)	Pressure Holding Solenoid Valve	OFF (Open)	ON (Close)	ON (Close)
	(5)	Pressure Holding Solenoid Valve	OFF (Open)	ON (Close)	ON (Close)
	(8)	Pressure Reduction Solenoid Valve	OFF (Close)	OFF (Close)	ON (Open)
	(9)	Pressure Reduction Solenoid Valve	OFF (Close)	OFF (Close)	ON (Open)
	Wheel Cylinder Pressure	Right	Increase	Holding	Reduce
		Left	Increase	Holding	Reduce

*1: The solenoid valve controls the hydraulic pressure between "open" and "close" according to the operating condition by adjusting continually.

*2: Indicates an inactive condition.

3. Skid Control ECU

VSC

Based on the 4 different sensor signals received from the speed sensors, yaw rate & deceleration sensors and steering angle sensor, the skid control ECU calculates the vehicle condition.
If a strong front wheel skid or rear wheel skid tendency is created during an emergency avoidance maneuver or cornering, and the skid control ECU determines that the amount of vehicle condition exceeds a prescribed value, it controls the engine torque through throttle and the brake fluid pressure according to the amount of needed to control the vehicle.

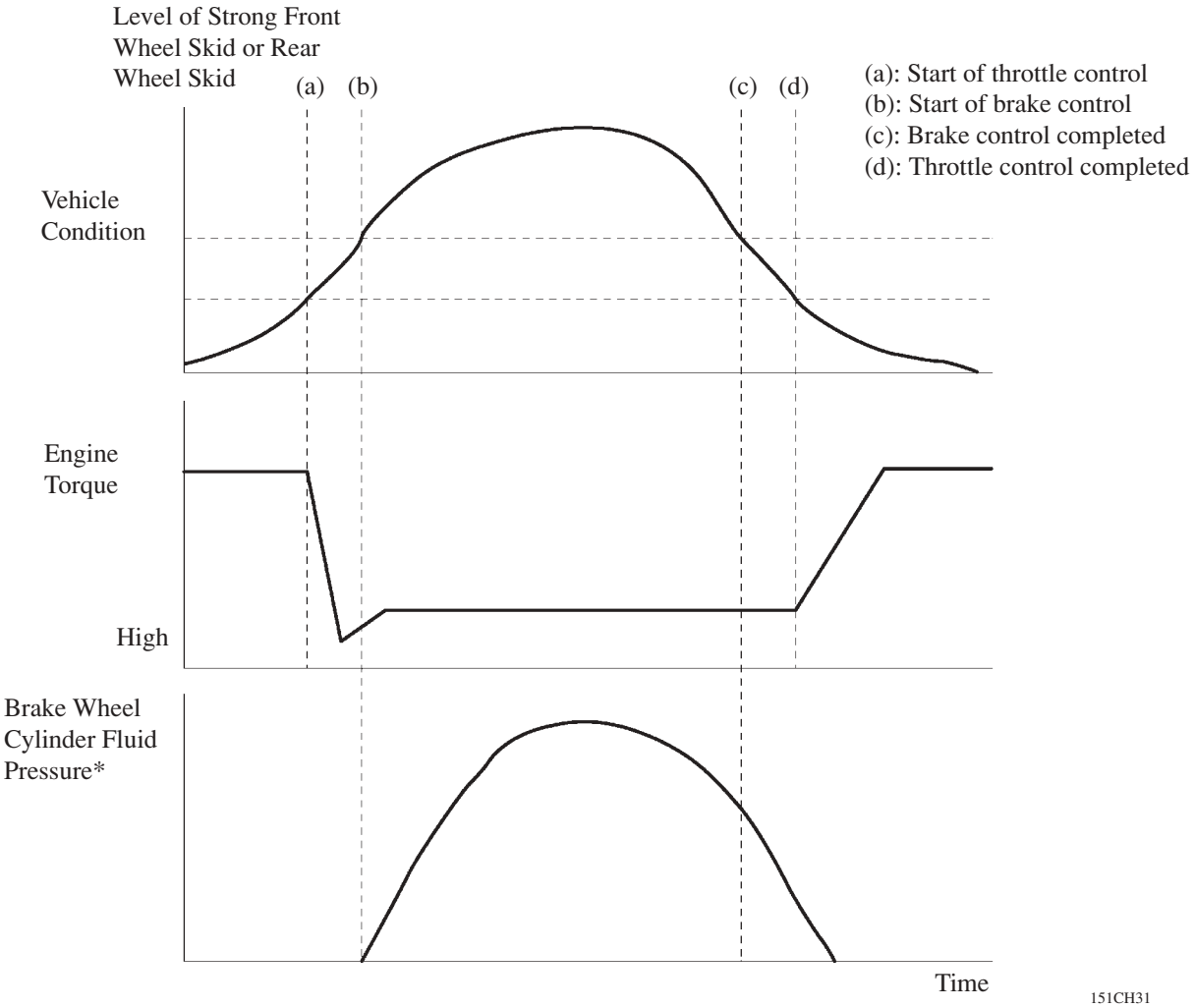

*: The wheel cylinder that activates varies depending on the condition of the vehicle.

Initial Check

Each time the ignition switch is turned ON, and the vehicle reaches approximately speed of 6 km/h (4 mph) or more, the skid control ECU performs the initial check.
The functions of each solenoid valve and pump motor in the brake actuator are checked in order.

Self-Diagnosis

- If the skid control ECU detects a malfunction in the ABS with EBD, brake assist, TRC and VSC systems, the ABS, brake system and VSC warning lights and the TRC OFF and Slip indicator lamps that corresponds to the function in which the malfunction has been detected lights up, as indicated in the table below, to alert the driver of the malfunction.

○: Light ON —: Light OFF

Item	ABS	EBD	Brake Assist	TRC	VSC
ABS Warning Light	○	○	○	—	—
Brake System Warning Light	—	○	—	—	—
VSC Warning Light	—	—	—	○	○
TRC OFF Indicator Lamp	○	○	○	○	○
Slip Indicator Lamp	—	—	—	—	—

- At the same time, the DTC (Diagnostic Trouble Code) are stored in memory. The DTC can be read by connecting the SST (09843-18040) between the Tc and CG terminals DLC3, and observing the blinking of the ABS and VSC warning light (2-digit code), or by connecting a hand-held tester (5-digit code).
- This system has a sensor signal check (test mode) function. This function is activated by connecting the SST (09843-18040) between the Ts and CG terminals of the DLC3 or by connecting a hand-held tester. This check function performs yaw rate sensor zero point calibration, deceleration sensor zero point calibration, yaw rate sensor check, master cylinder pressure sensor check, and speed sensor check.
- If the skid control ECU detects a malfunction during a sensor check, it stores the DTC in its memory. This DTC can be read during a sensor signal check operation by connecting the Tc and CG terminals of the DLC3 and observing the blinking of the ABS warning light and the VSC warning light, or on a hand-held tester.
- If the CAN has communication error at ECU or sensors, multiple DTCs (Diagnostic Trouble Codes) are output simultaneously to indicate the malfunction location. For detail, refer to page 254.
  For details on the DTC that are stored in skid control ECU memory and the DTC that are output through the sensor check function, see the Avensis Verso Repair Manual Supplement (Pub. No. RM1032E).

▶ DTC Chart (Blinking ABS Warning Light) ◀

DTC No.		Detection Item	DTC No.		Detection Item
2-digit	5-digit		2-digit	5-digit	
11	C0278	Open circuit in ABS SOL relay circuit	38	C1238	Foreign matter in attached on the tip of the right rear sensor
12	C0279	Short circuit in ABS SOL relay circuit	39	C1239	Foreign matter in attached on the tip of the left rear sensor
13	C0273	Open circuit in ABS MTR relay circuit	41	C1241	Low battery positive voltage
14	C0274	Short circuit in ABS MTR relay circuit	43*	C1243*	Malfunction in deceleration sensor (constant output)
21	C0226	Open or short circuit in brake actuator solenoid circuit (SFR circuit)	44*	C1244*	Malfunction in deceleration sensor
22	C0236	Open or short circuit in brake actuator solenoid circuit (SFL circuit)	45*	C1245*	Malfunction in deceleration sensor
23	C0246	Open or short circuit in brake actuator solenoid circuit (SRR circuit)	46*	C1246*	Malfunction in master cylinder pressure sensor
24	C0256	Open or short circuit in brake actuator solenoid circuit (SRL circuit)	49	C1249	Open circuit in stop light switch circuit
25*	C1225*	Open or short circuit of brake actuator solenoid circuit (SM circuit)	51	C1251	● ABS pump motor is locked ● Open circuit in pump motor circuit
31	C0200	Right front wheel speed sensor signal malfunction	91*	C1361*	Short circuit in ABS motor fail safe relay circuit
32	C0205	Left front wheel speed sensor signal malfunction	94*	U0121*	Malfunction in CAN communication
33	C0210	Right rear wheel speed sensor signal malfunction	95*	U0124*	Malfunction in CAN communication with deceleration sensor
34	C0215	Left rear wheel speed sensor signal malfunction	97*	C1381*	Malfunction in power supply voltage yaw/deceleration sensor
35	C1235	Foreign matter in attached on the tip of the right front sensor	Always ON		● Malfunction in skid control ECU ● Open circuit in ABS warning light circuit
36	C1236	Foreign matter in attached on the tip of the left front sensor			

*: Excluding the models with ABS with EBD and brake assist.

▶ DTC Chart of Sensor Check (Blinking ABS Warning Light) ◀

DTC No.		Detection Item	DTC No.		Detection Item
2-digit	5-digit		2-digit	5-digit	
71	C1271	Low output voltage of right front speed sensor	76	C1276	Abnormal change in output voltage of left front speed sensor
72	C1272	Low output voltage of left front speed sensor	77	C1277	Abnormal change in output voltage of right rear speed sensor
73	C1273	Low output voltage of right rear speed sensor	78	C1278	Abnormal change in output voltage of left rear speed sensor
74	C1274	Low output voltage of left rear speed sensor	79*	C1279*	Deceleration sensor output voltage is faulty
75	C1275	Abnormal change in output voltage of right front speed sensor	81*	C1281*	Master cylinder pressure sensor output signal is faulty

*: Excluding the models with ABS with EBD and brake assist.

▶ **DTC Chart (Blinking VSC Warning Light)** ◀ (Only on models equipped with VSC)

DTC No.		Detection Item	DTC No.		Detection Item
2-digit	5-digit		2-digit	5-digit	
31	C1231	Malfunction in steering angle sensor	44	C1224	Open or short circuit in NEO signal circuit
32	C1232	Malfunction in deceleration sensor	51	C1201	Malfunction in engine ECU
34	C1234	Malfunction in yaw rate sensor	53	C1203	Malfunction in engine ECU communication circuit
36	C1210	Zero point calibration of yaw rate sensor undone	62	U0123	Malfunction in CAN communication with yaw rate sensor
39	C1336	Zero point calibration of deceleration sensor undone	63	U0126	Malfunction in CAN communication with steering angle sensor
43	C1223	Malfunction in ABS control system	Always ON		Malfunction in skid control ECU

▶ **DTC Chart of Sensor Check (Blinking VSC Warning Light)** ◀ (Only on models equipped with VSC)

DTC No.		Detection Item
2-digit	5-digit	
71	C0371	Yaw rate sensor output signal is faulty

Fail-Safe

- In the event of a malfunction in the TRC and/or VSC, the skid control ECU prohibits the TRC and VSC operations.
- In the event of a malfunction in the ABS and/or brake assist, the skid control ECU prohibits the ABS, brake assist, TRC and VSC operations.
- In the event of the malfunction in the EBD control, skid control ECU prohibits the EBD control.
- If a communication malfunction occurs between the skid control ECU and the steering angle sensor or the yaw rate & deceleration sensor, the skid control ECU stops control of the TRC and VSC.
- When the engine ECU detects a DTC, it will be unavailable the TRC and VSC controls.

■MULTIPLEX COMMUNICATION

1. General

- CAN (Controller Area Network) communication has been adopted in the brake control system of the vehicles equipped with the VSC system.
- CAN is a type of on-vehicle multiplex communication system that performs excellent data communication and error detection between ECUs and sensors.
- CAN uses twisted-pair wires, consisting of two wires, CAN-H and CAN-L, which have different voltages to establish communication.
- The CAN in Avensis Verso is connected to the Skid Control ECU, steering angle sensor, yaw rate and deceleration sensor and DLC 3 (Data Link Connector). However, the diagnosis information from the skid control ECU is output from the SIL line.

▶ Characteristic ◀

- Simplifies the wiring harness routing because communication among all the ECUs connected to CAN is made possible through the use of a pair of communication wires.
- Its communication speed is faster than the BEAN (Body Electronics Area Network) used on other models.

Communication Type	CAN	BEAN
Communication Speed	500 Kbps	MAX: 10 Kbps

▶ System Diagram ◀

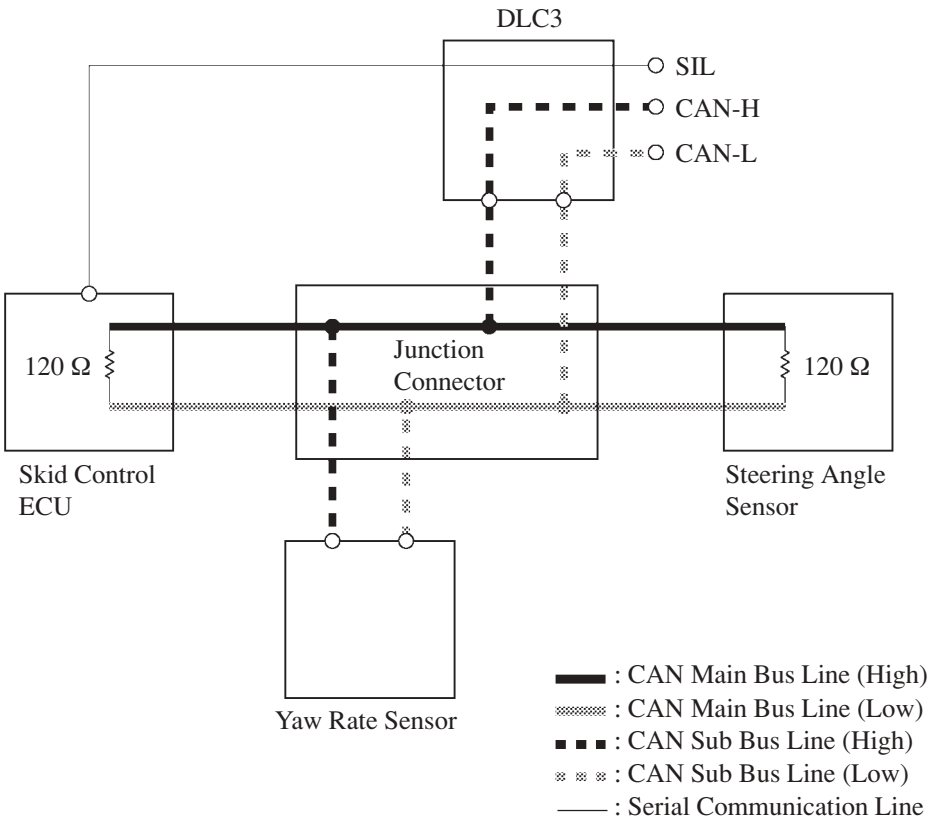

257HL140

2. Layout of Main Components

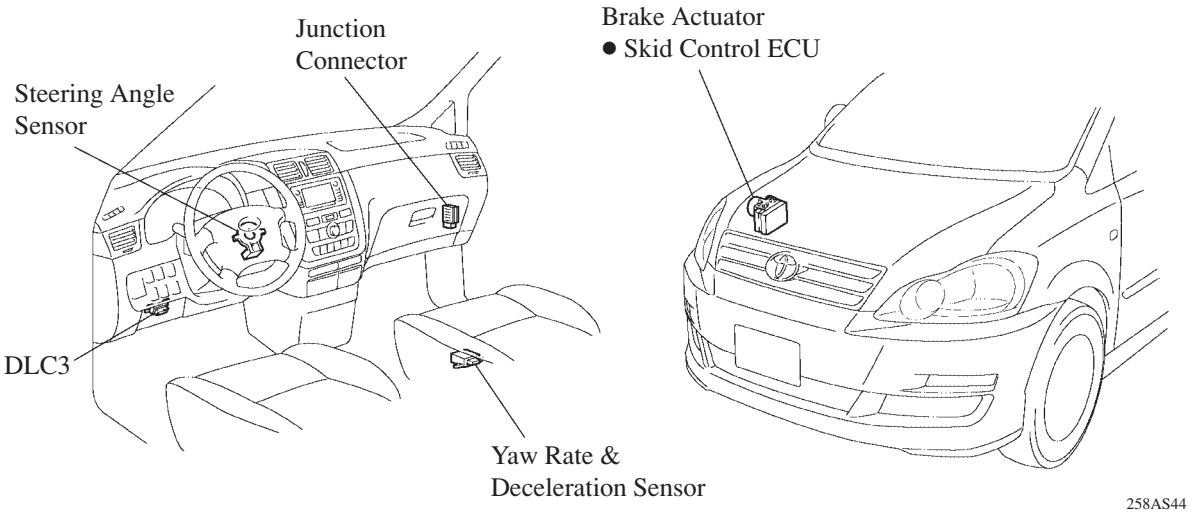

3. Diagnosis

- If the CAN has communication error at ECU or sensor, DTCs (Diagnostic Trouble Codes) are output simultaneously to indicate the malfunction location.
- The DTCs for CAN communication concerning the brake control system can be read by connecting the SST 09843-18040 to Tc and CG terminals of DLC3 connector, and observing the blinking of the ABS and VSC warning light (2-digit code) or by connecting a hand-held tester (5-digit code). For details, see the Avensis Verso Repair Manual Supplement (Pub No.1032E).

▶ DTC Combination Chart ◀

DTC Code Output (from VSC ECU)	Mode
U0121/94, U0123/62 U0124/95, U0126/63	Skid Control ECU communication stop mode
U0123/62, U0124/95	Yaw rate and deceleration sensor communication stop mode
U0126/63	Steering angle sensor communication stop mode

▶ DTC Chart ◀

DTC	Detection Item
U0121/94	Malfunction in CAN communication
U0123/62	Malfunction in CAN communication with yaw rate sensor
U0124/95	Malfunction in CAN communication with deceleration sensor
U0126/63	Malfunction in CAN communication with Steering angle sensor

- DLC3 is equipped with CAN-H and CAN-L terminals for CAN diagnosis. It is possible to determine if there is an open or short on the main bus line by measuring the resistance value between these terminals. It is possible to determine if there is a short between the bus line - power supply/ground by measuring the resistance value between terminal CAN-H or CAN-L, and the BAT or CG terminal.

▶ CAN-H – CAN-L Inspection ◀

Resistance Value	Bus Line Status
Less than 54 Ω	Short between lines (both sub bus lines of main and sub)
54 Ω – 67 Ω	Normal
	Yaw rate & deceleration sub bus line open (DTC is output)
	Short between bus line and power or ground
108 Ω – 132 Ω	Open in main bus line
∞ Ω	Open in DLC3 sub bus line

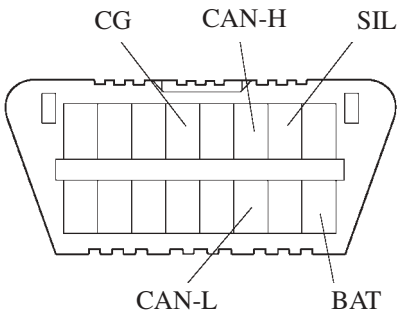

241BE110

▶ Inspection for short between bus line – power supply/ground ◀

Inspection Item	Resistance Value	Bus Line Status
CAN-H – BAT	more than 1 kΩ	Bus line is OK if no DTC is output
	less than 1 kΩ	Short between bus line and power or ground
CAN-L – BAT	more than 1 kΩ	Bus line is OK if no DTC is output
	less than 1 kΩ	Short between bus line and power or ground
CAN-H – CG	more than 3 kΩ	Bus line is OK if no DTC is output
	less than 3 kΩ	Short between bus line and power or ground
CAN-L – CG	more than 3 kΩ	Bus line is OK if no DTC is output
	less than 3 kΩ	Short between bus line and power or ground

- If a communication malfunction occurs between the skid control ECU and the steering angle sensor or the yaw rate & deceleration sensor, the skid control ECU stops control of the VSC (Vehicle Stability Control).
- For details of the CAN diagnosis system, see the Avensis Verso Repair Manual Supplement (Pub. No. RM1032E).

4. Fail-Safe

The fail-safe system provided for each system will operate if a failure occurs in the communication wire such as a short or an open circuit.

- On the new Avensis Verso, the following fail-safe functions will operate if CAN communication is unavailable.

Location of Disabled Communication	Fail-Safe
Skid Control ECU, Yaw Rate, Deceleration sensor, and Steering angle sensor	• Stops VSC/ABS functions • Illuminates VSC indicator light and ABS indicator light • Detects DTCs

■AIR CONDITIONER

1. General

- In accordance with the adoption of the automatic air conditioner, the push button type heater control panel has been used.
- On Australia model, the BEAN communication is adopted for the communication between the A/C ECU and engine ECU.

2. System Diagram

▶ Models for Europe and General Countries ◀

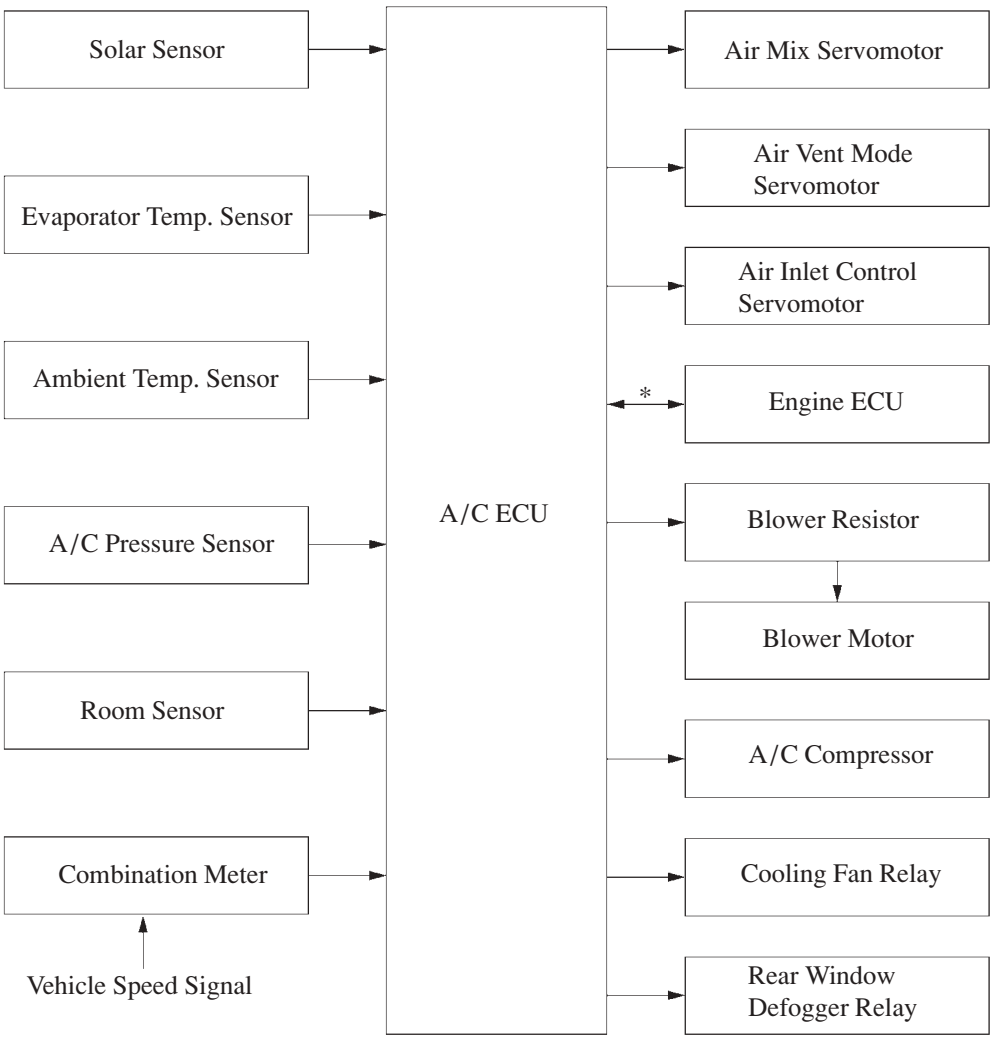

258AS10

*: Water temperature signals are transmitted through serial communication.

▶ Model for Australia ◀

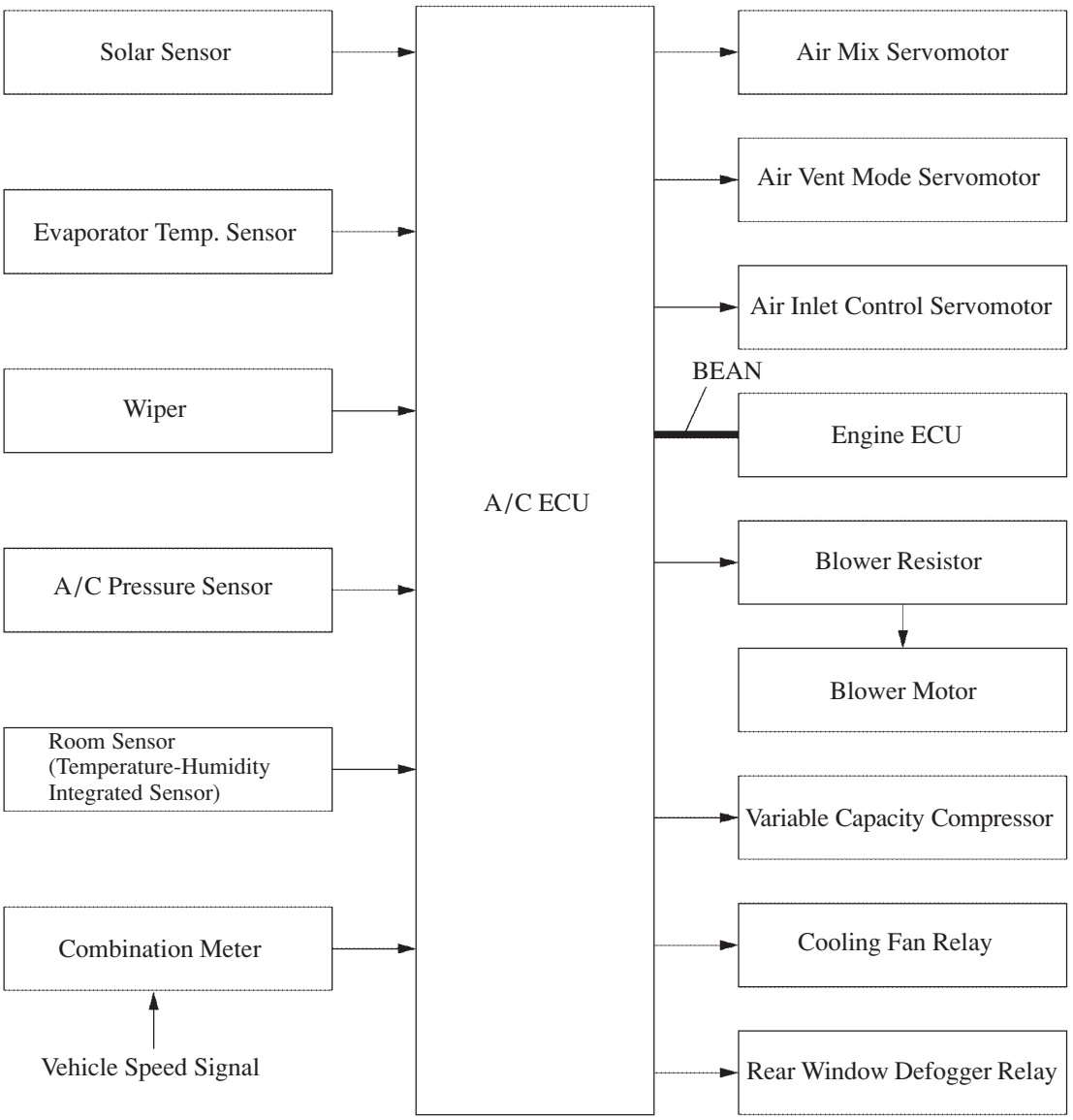

258AS11

3. Layout of Main Components

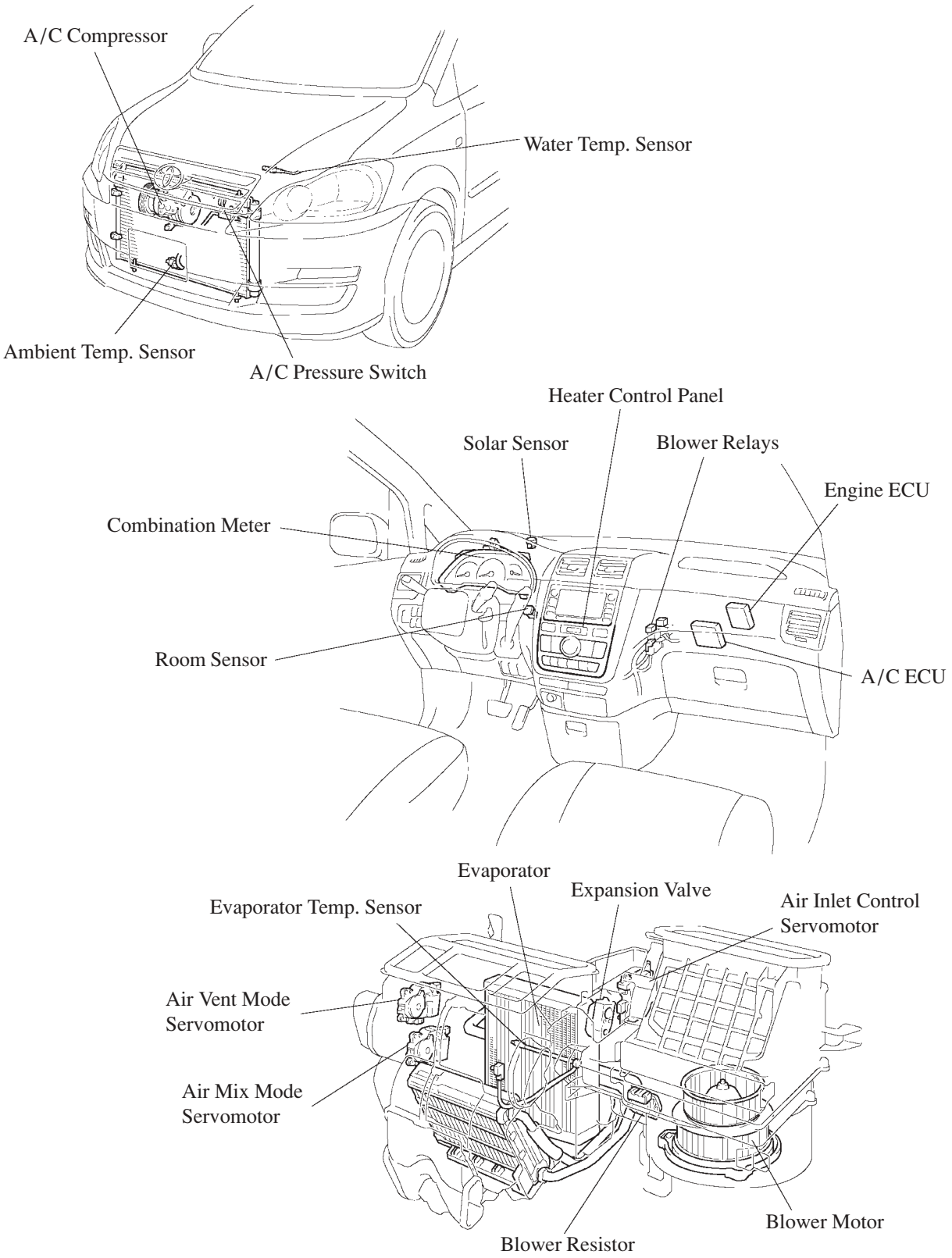

4. Construction and Operation

Heater Control Panel

In accordance with the adoption of the automatic air conditioner, the heater control panel has been changed.

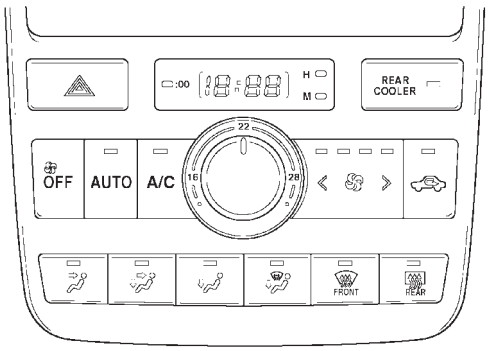

258AS08

Model for Europe

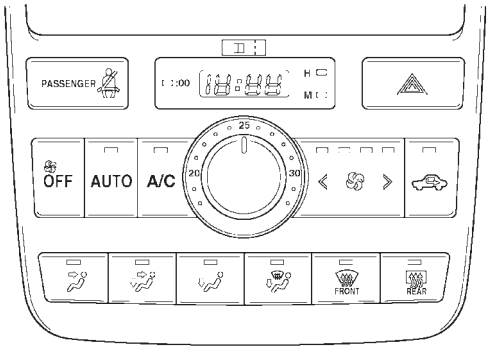

258AS07

Models for Europe and General Countries

Solar Sensor

- This sensor detects the changing of the amount of solar as a changing of voltage supplied in the built-in photo diode.
- This sensor is located in the driver side above the instrument panel.

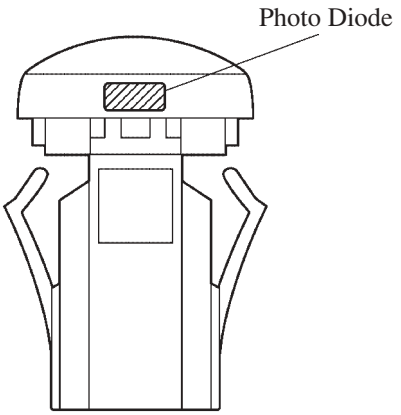

258AS57

Temperature-Humidity Integrated Sensor (only on models for Australia)

- This sensor has a built-in thermister to sense the vehicle interior temperature and output it to the A/C ECU.
- It also contains a humidity-sensing resistance film that absorbs and releases the humidity in the vehicle interior. During the absorption and releasing processes, the humidity-sensing resistance film expands (while absorbing humidity) and contracts (while drying). The clearance between the carbon particles in the humidity-sensing resistance film expands and contracts during absorption and drying, thus changing the resistance between the electrodes. The humidity sensor senses the change in the resistance within the sensor's temperature-humidity detection range, and outputs it to the A/C ECU.

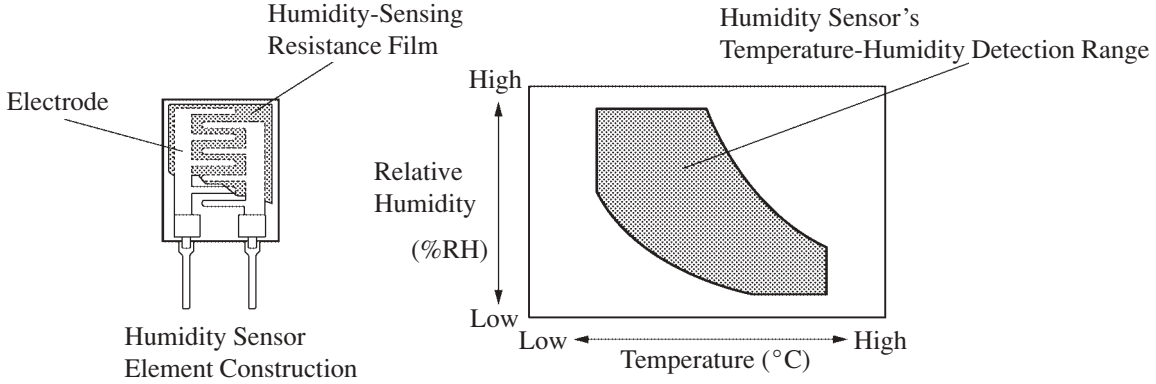

258AS13

Compressor

1) General

This compressor is continuously variable capacity type (6SEU16) in which its capacity varies in accordance with the cooling load of the air conditioner.

- A solenoid control valve that adjusts the suction pressure so that the suction pressure can be controlled as desired is provided.
- A/C pulley has been adopted the plastic DL (Damper Limiter) type.

Service Tip

The compressor cannot be disassembled, so it must be replaced as an assembly.

2) Construction and Operation

a. Plastic DL Type A/C Pulley

This pulley contains a damper to absorb the torque fluctuations of the engine and a limiter mechanism to protect the drive belt in case the compressor locks. In the event that the compressor locks, the limiter mechanism causes the spoke portion of the pulley to break, thus separating the pulley from the compressor. To reduce weight, the pulley portion is made of plastic.

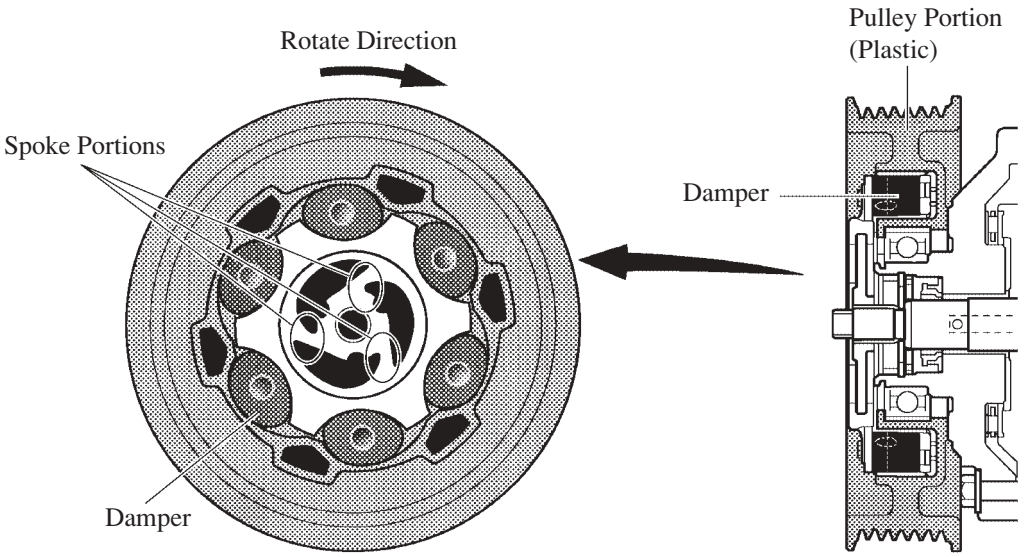

Limiter Mechanism

240BE92

b. Compressor

- This compressor consists of the shaft, lug plate, piston, shoe, crank chamber, cylinder, and solenoid control valve. When the shaft rotates, this movement is transmitted via the lug plate that is connected to the shaft to rotate the swash plate. This rotational movement of the swash plate is transmitted via the shoe to the reciprocal movement of the piston in the cylinder, which performs the suction, compression, and discharge of the refrigerant.

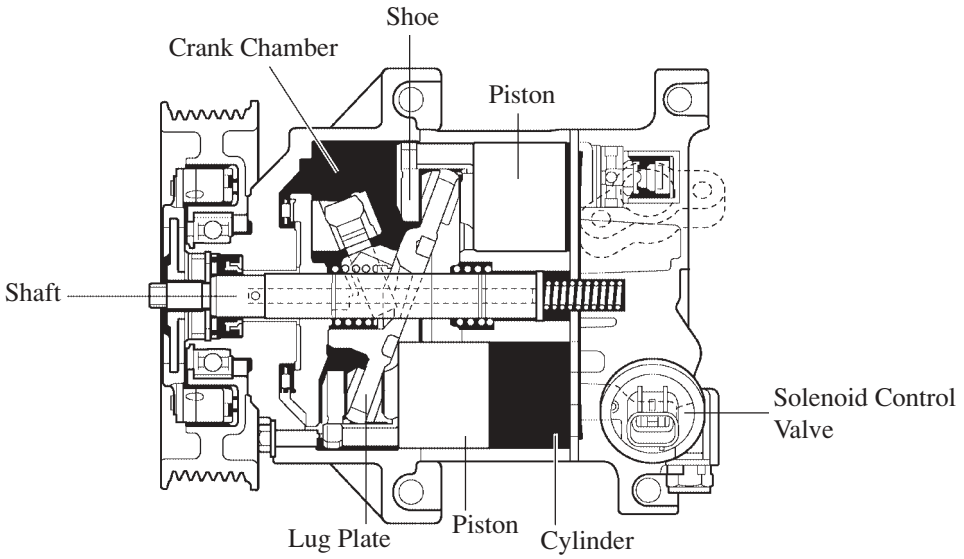

240BE93

- The crank chamber is connected to the suction passage. A solenoid control valve is provided between the suction passage (LO pressure) and the discharge passage (HI pressure). The solenoid control valve operates under duty cycle control in accordance with the signals from the A/C ECU. Duty cycle control, which changes linearly between 0 to 100%, varies the discharge capacity.

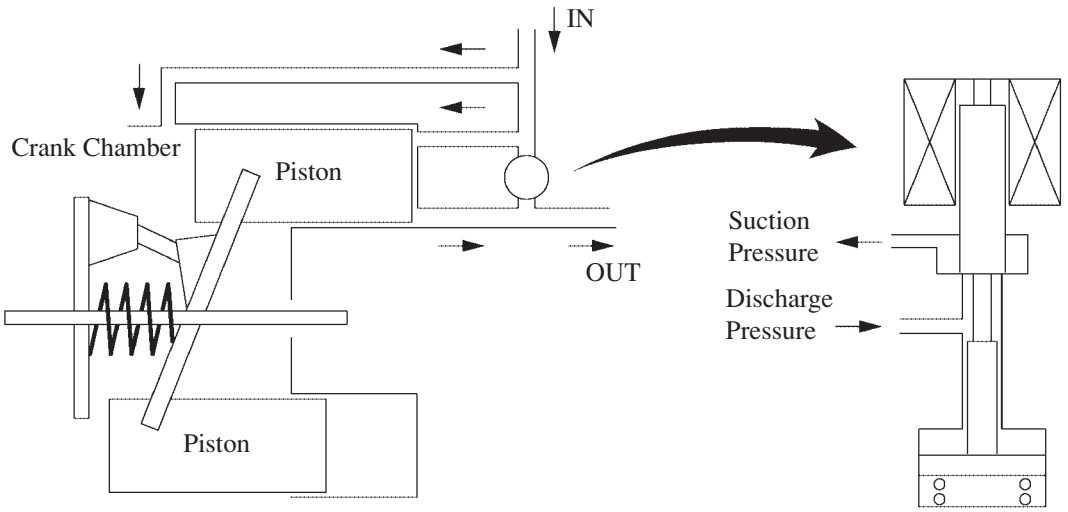

Solenoid Control Valve

240BE94

- When the solenoid control valve closes (solenoid coil is energized), a difference in pressure is created and the pressure in the crank chamber decreases. Then, the pressure that is applied to the right side of the piston becomes greater than the pressure that is applied to the left side of the piston. This compresses the spring and tilts the lug plate. As a result, the piston stroke increases and the discharge capacity increases.

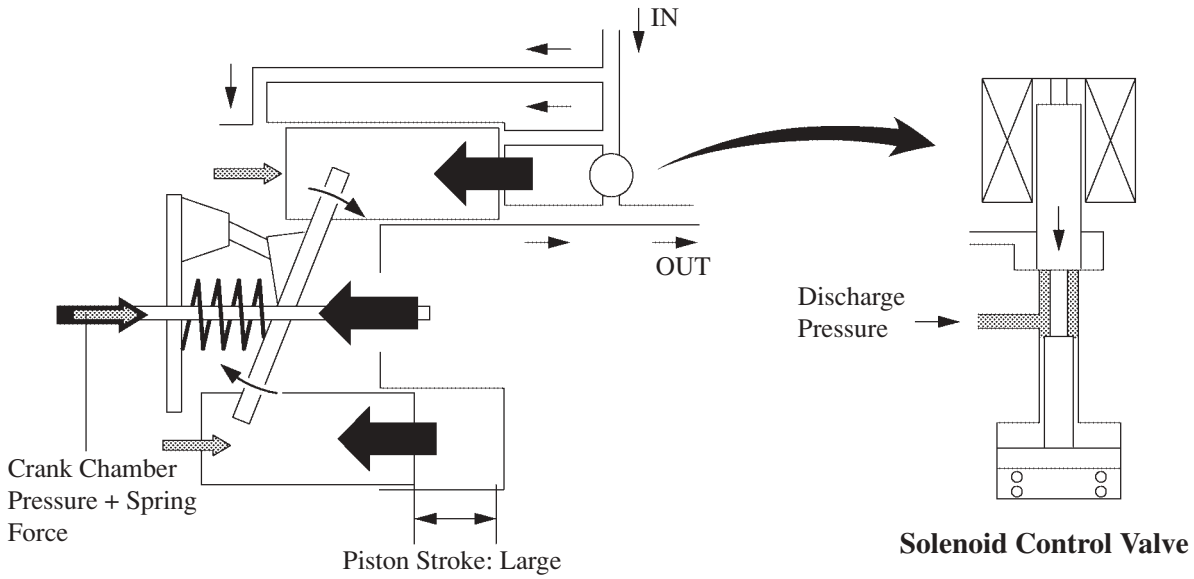

240BE95

- When the solenoid control valve opens (solenoid coil is not energized), the difference in pressure disappears. Then, the pressure that is applied to the left side of the piston becomes the same as the pressure that is applied to the right side of the piston. Thus, the spring elongates and eliminates the tilt of the lag plate. As a result, there is no piston stroke and the discharge capacity turns to 0.

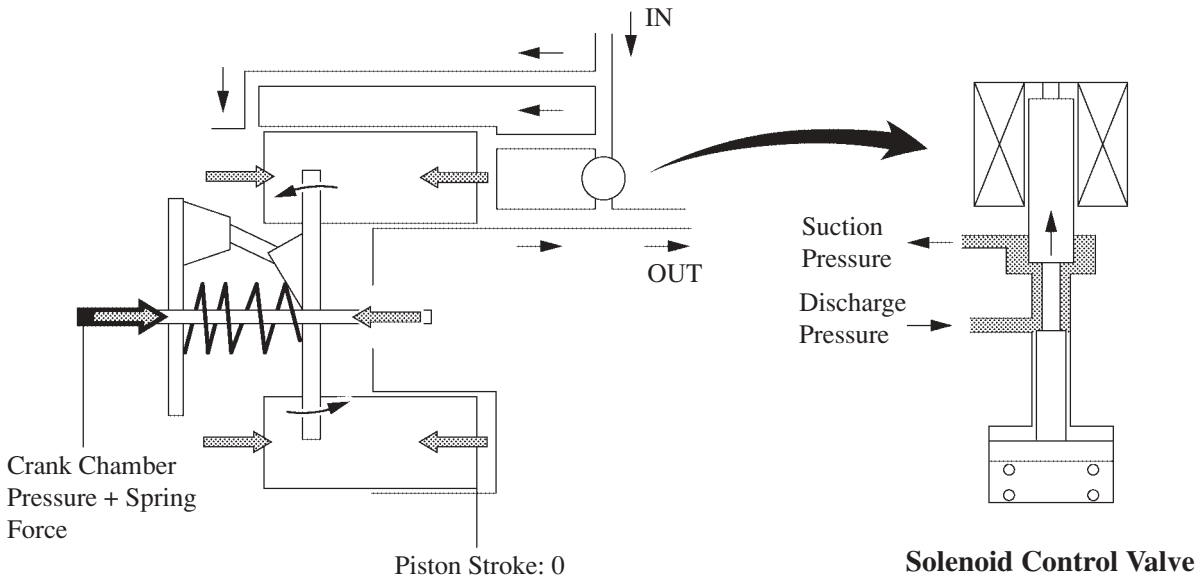

240BE96

5. Air Conditioner Control

The air conditioner ECU has following control.

Control		Outline
Calculation of Required Outlet Air Temperature (TAO: Temperature Air Outlet)		After receiving the signals from the sensors and the temperature control switching setting for driver and front passenger. Then, it uses a prescribed formula to calculate the required outlet air temperature, and regulate the servomotors and the blower motor. This outlet air temperature is required in order to maintain the set temperature in a stable manner.
Outlet Air Temp. Control	MAX Fix Control	This control sets the TAO to –200 when the temperature is set to MAX COOL, and to 200 when the temperature is set to MAX HOT.
	Air Mix Damper Control	In response to the temperature control switch setting, the required outlet air temperature, evaporator temperature sensor, and water temperature sensor compensations are used by the air mix damper control to calculate a tentative damper opening angle, through an arithmetic circuit in the air mix damper, to arrive at a target damper opening angle.
		This control calculates a tentative damper opening angle for the resistance value in accordance with the temperature control switch setting, and arrives at a target damper opening angle through an arithmetic circuit in the air mix damper.
Blower Control	Blower Motor Start Up Control	When the blower motor is started up, the blower voltage in the LO speed in output to the blower controller for 2 seconds. This is designed to protect the blower controller from a sudden start up voltage surge.
	Automatic Control	**Step Less Air Volume Control:** ● When the AUTO switch in the heater control panel is pushed, the A/C ECU automatically regulates the voltage to the blower controller, in accordance with the required outlet air temperature, to deliver step less air volume. **Warm-up Control:** ● When the air outlet is in the FOOT, BI-LEVEL, or FOOT/DEF mode, the blower will not operate until the water temperature increases above a prescribed value. When the temperature increases above a prescribed value, the blower motor operates at the LO speed. Thereafter, control is effected by comparing the airflow calculated from the water temperature and the airflow calculated from the TAO.
		Time-Lagged Air Flow Control: ● 2 types of time-lagged air flow control (in accordance with the detected by the evaporator temperature sensor) help prevent hot air from being emitted from FACE or BI-LEVEL vent. For details, see page 265.
	Automatic Control	**Sunlight Air Flow Control:** ● Controls the blower speed in accordance with the intensity of the sunlight when the air outlet mode is at FACE or BI-LEVEL. The blower speed can be adjusted in response to the signal received from the solar sensor.
Air Outlet Control	Manual Control	Changes the air outlet in accordance with the selected position of the mode select switch.
	Automatic Control	**Mode Damper Switching Servomotor Control:** ● When the AUTO switch of the heater control panel has been turned ON, automatic control causes the mode servomotor to rotate to a desired position in accordance with the target damper opening, which is based on the calculation of the TAO. **Low-Temperature FOOT/DEF Control:** ● In accordance with the water temperature, ambient temperature, amount of sunlight, required outlet temperature (TAO), and vehicle speed conditions, this control automatically switches the blower outlet between the FOOT/ DEF modes to prevent the window from becoming fogged when the outside air temperature is low.

Control		Outline
Compressor Control	Refrigerant Pressure Malfunction Detection	By monitoring the A/C pressure sensor signal, this system can judge the refrigerant pressure as being abnormal and turns the operating capacity of the compressor to 0%.
	Evaporator Temperature Sensor Judgment	When the detected temperature of the evaporator temperature sensor is below –4, the operating capacity of the compressor turns to 0% in order to prevent the evaporator from becoming frosted.
	Ambient Temp. Sensor Judgment	When the detected temperature of the ambient temperature sensor is below –1.5, the operating capacity of the compressor turns to 0%.
	Evaporator Supercooling Control	When the vehicle is decelerating, this control implements evaporator supercooling in order to reduce the operation rate of the compressor during idle. For details, see page 266.
	Variable Capacity Compressor Control*	The variable capacity compressor control consists of 5 controls. For details, see page 266. ● Acceleration Control ● Low-Speed Control ● Frost Control ● A/C switch ON/ OFF Control ● Compressor Protect Control
Electronic Cooling Fan Control		The A/C ECU and the engine ECU control the cooling fan speed in accordance with the water temperature signal, vehicle speed signal, and refrigerant pressure signal.
Rear Window Defogger Control		Switches the rear defogger and outside rear view mirror heaters on for 15 minutes when the rear defogger switch is switched on. Switches them off if the switch is pressed while they are operating.
Self-Diagnosis		Check the indicator, sensor, and actuator the check in accordance with operation of the heater control panel switches, then LCD portion a DTC (Diagnostic Trouble Codes) to indicate if there is a malfunction or not.

*: Only on the models for Australia

Time-Lagged Air Flow Control

1) General

2 types of time-lagged air flow control (in accordance with the detected by the evaporator temperature sensor) help prevent hot air from being emitted from FACE or BI-LEVEL vent.

a. Evaporator Temperature Sensor Above 30°C

1) As shown in the diagram on the below, this control turns OFF the blower motor for T1 sec. and turns ON the compressor to cool the air conditioner unit. After T1 sec. has elapsed, the blower motor rotates in the manual LO mode, allowing the cooled air to be discharged from the vents. Thus, the discomfort that is associated with the discharge of warm air is prevented.
2) Between T2 and T3 sec. the air flow volume according to the time-lagged air flow control and the air flow volume of the blower control according to the calculation of the TAO are compared. The air flow volume is then regulated at the smaller volume of the two.
3) After T3 sec. has elapsed, control is effected by the blower control according to the calculation of the TAO.

b. Evaporator Temperature Sensor Below 30°C

1) As shown in the diagram on the below, for T1 sec., the blower motor rotates in the manual LO mode.
2) Thereafter, up to T2 sec., the air flow volume according to the time-lagged air flow control and the air flow volume according to the blower control of the calculation of the TAO are compared. The air flow volume is then regulated at the smaller volume of the two.
3) After T3 sec. has elapsed, control is effected by the blower control according to the calculation of the TAO.

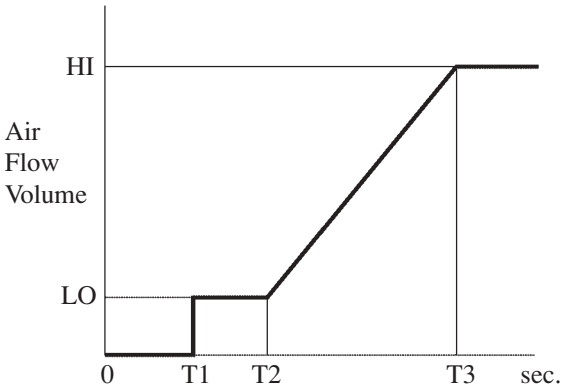

240BE75

Above 30°C

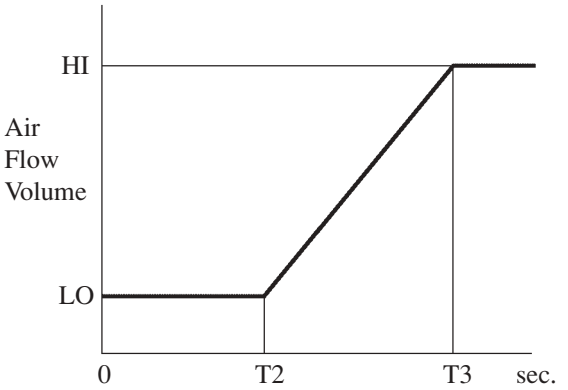

240BE45

Below 30°C

c. Evaporator Supercooling Control

In the entire deceleration range of the vehicle, this control implements evaporator supercooling, in order to reduce the operation rate of the compressor during idle. As a result, fuel economy has been improved.

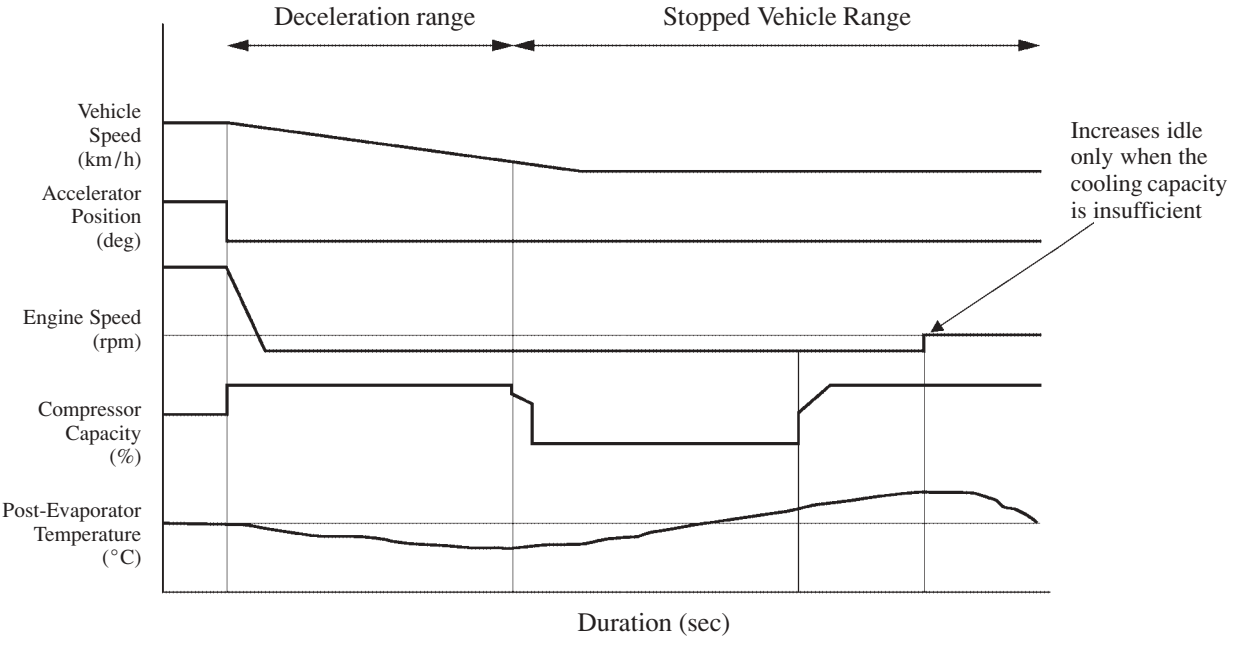

Variable Capacity Compressor Control

1) General

The variable capacity compressor control constantly compares the compressor operating capacities that have been calculated. It uses the lowest among them as the actual compressor operating capacity. As a result, efficient compressor control is realized to suit the air conditioner operation conditions and the vehicle driving conditions.

- Acceleration Control
- Low-speed Control
- Frost Control
- A/C Switch ON/ OFF Control
- Compressor Protect Control

2) Acceleration Control

The acceleration control consists of start off and passing acceleration control.
The A/C ECU controls the cooling capability during acceleration in accordance with the ambient temperature, internal temperature, and the set temperature.
It varies acceleration control during the cool down state and other states in order to control the capacity of the compressor. This prevents the vehicle's acceleration performance from being negatively affected and improves fuel economy, while ensuring the proper cooling performance.
After effecting acceleration control, the A/C ECU effects constant-speed capacity control in order to optimally control the compressor capacity.

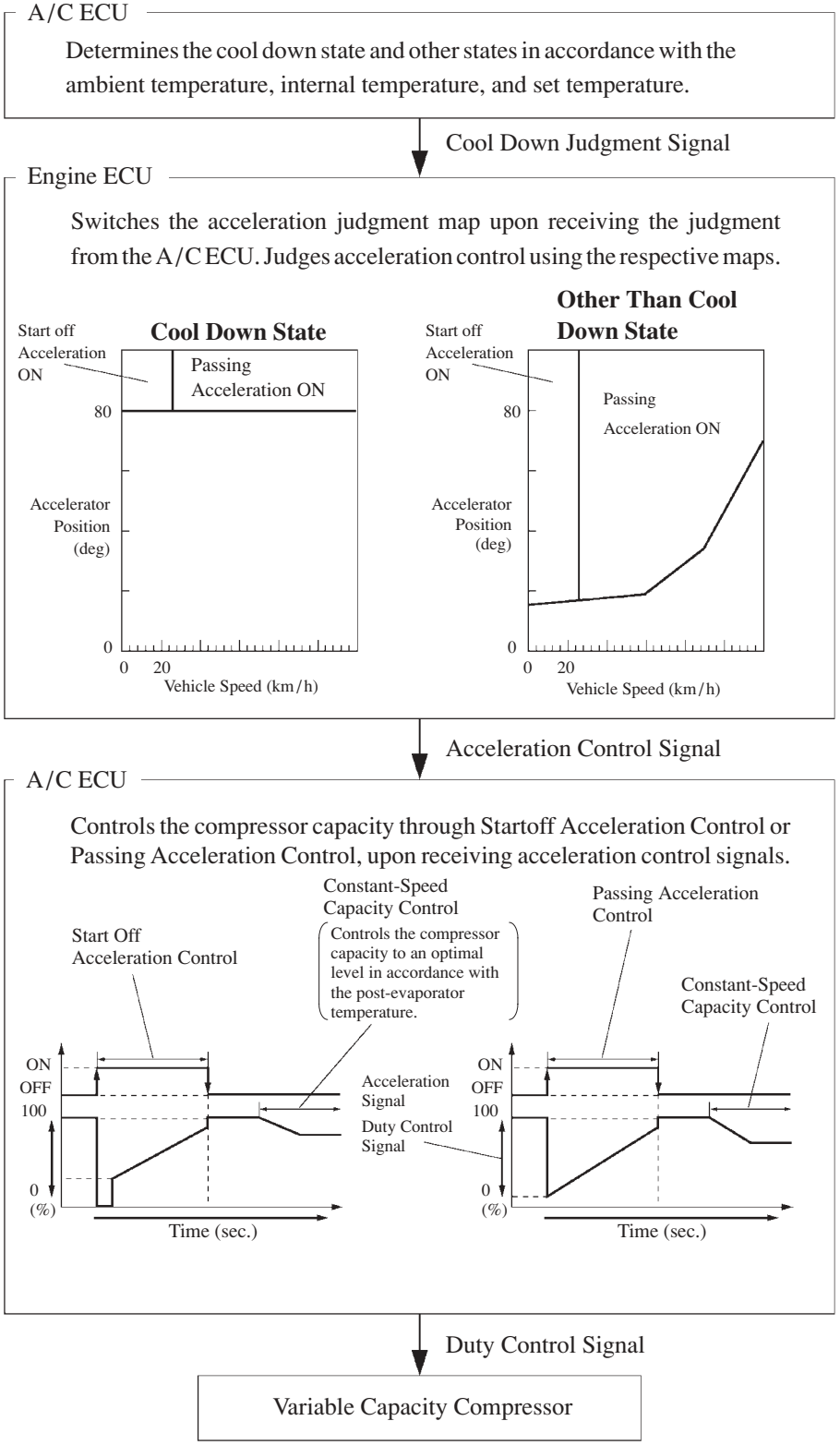

258AS43

3) Low-speed Control

When the engine ECU inputs an acceleration signal at low engine speeds, the A/C ECU lowers the compressor operating capacity output as shown in the table below. As a result, proper drivability at low engine speeds is ensured.

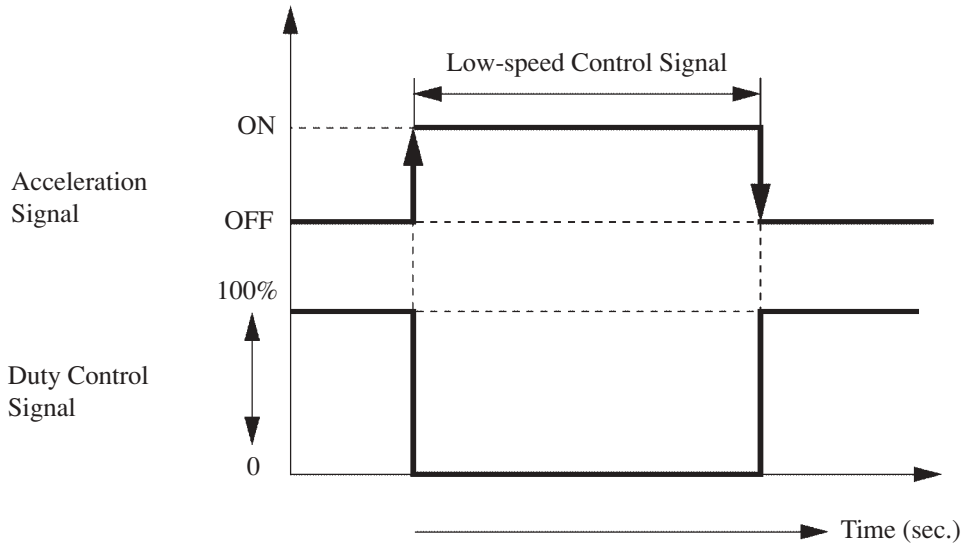

240BE50

4) Frost Control

To prevent the evaporator from frosting, this control calculates the compressor operating capacity using a calculation formula that has been established based on deceleration control, evaporator temperature sensor, and A/C pressure sensor signal.

5) A/C Switch ON/ OFF Control

Controls the compressor operating capacity as shown in the following table in accordance with the A/C switch.

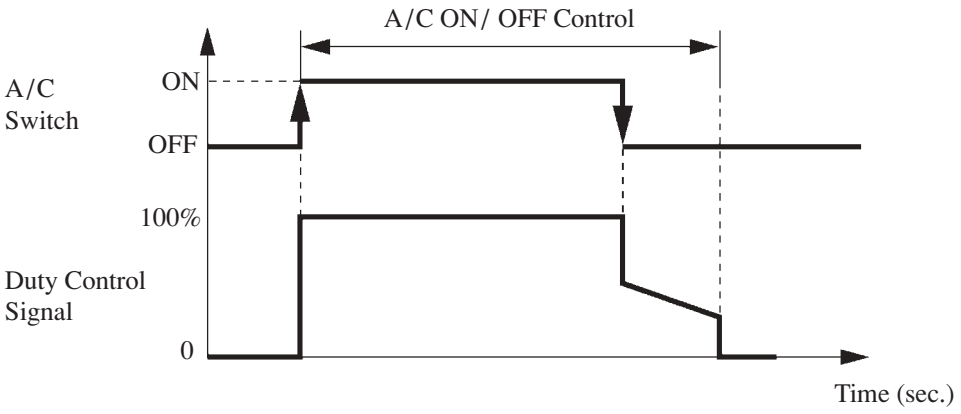

240BE51

6) Compressor Protect Control

The A/C ECU controls the compressor operating capacity as shown below in accordance with the engine speed.

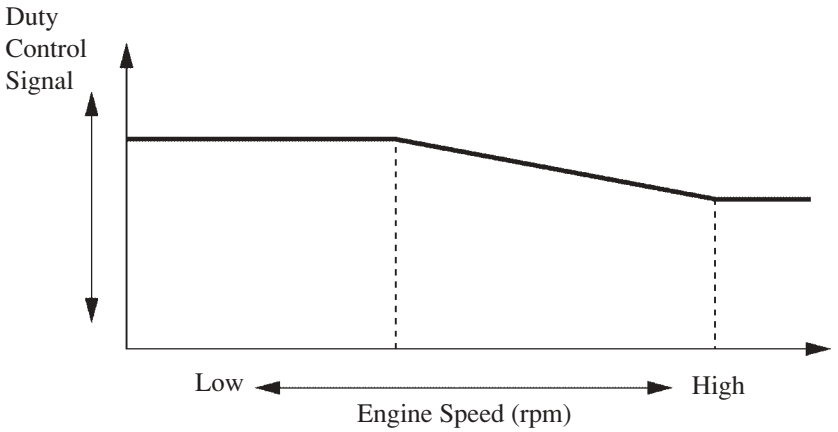

240BE53

Self-Diagnosis

- The A/C ECU has a self-diagnosis function. The self-diagnosis mode, which starts when the switches on the heater control panel are operated as shown below, has three functions: indicator check, sensor check, and actuator check.

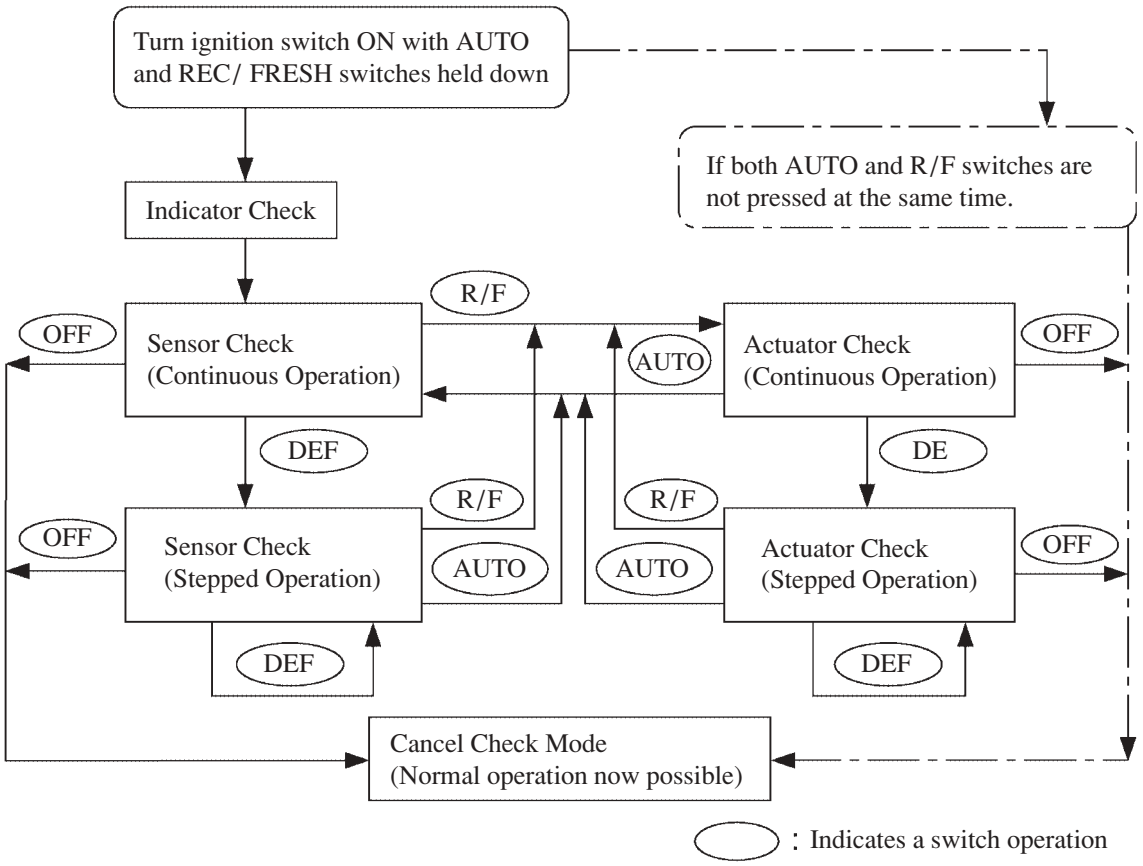

187BE33

▶ Function ◀

Function	Outline
Indicator Check	Checks indicator lights and temperature setting display.
Sensor Check	Checks the past and present malfunctions of the sensors, and clearing the past malfunction data.
Actuator Check	Checks against actuator check pattern if blower motor and servomotors are operating correctly according to signals from A/C ECU.

■NAVIGATION WITH AV SYSTEM

1. General

- The design of the screen has been improved in the navigation with AV system in order to improve its visibility. Furthermore, new functions have been added for improved convenience.
- The navigation voice guidance can be selected from eight languages: English, German, French, Dutch, Italian, Danish, Swedish and Spanish.

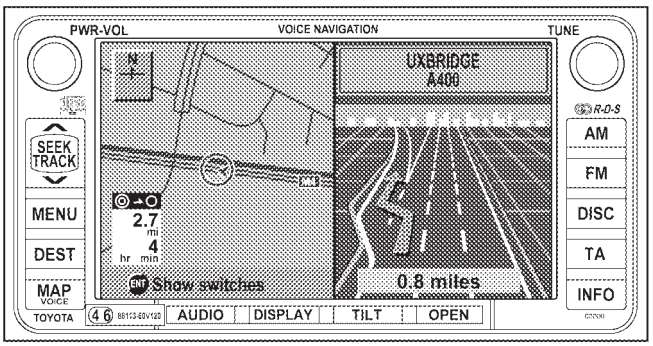

251EQ01

▶ System Diagram ◀

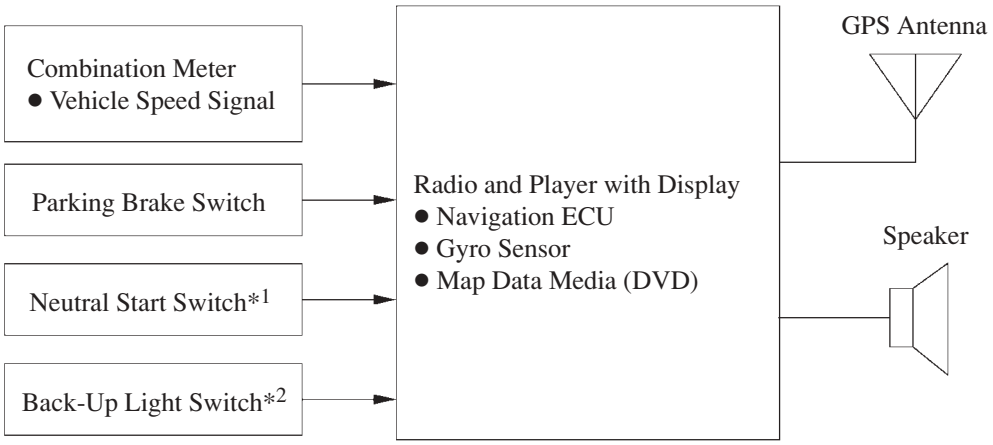

251BE38

*1: For Automatic Transaxle model
*2: For Manual Transaxle model

4

2. Layout of Main Components

Radio and Player with Display

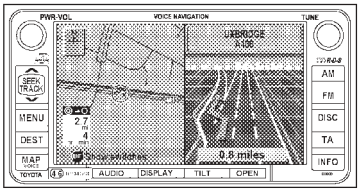

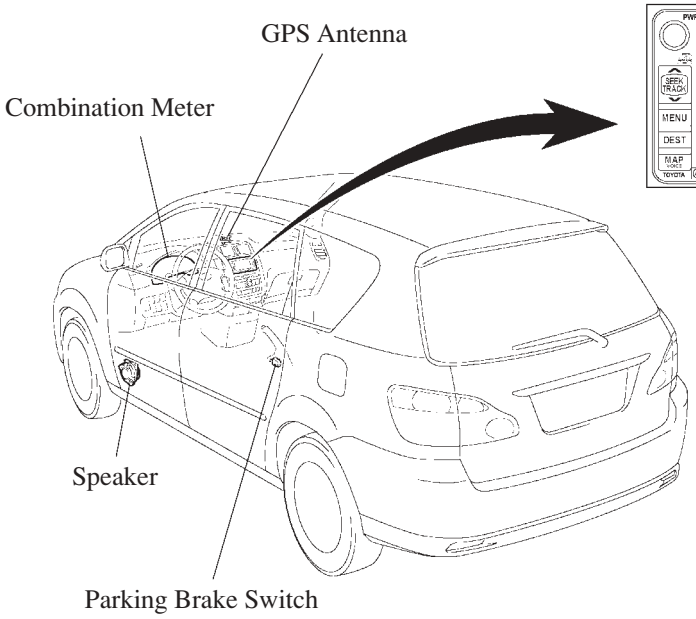

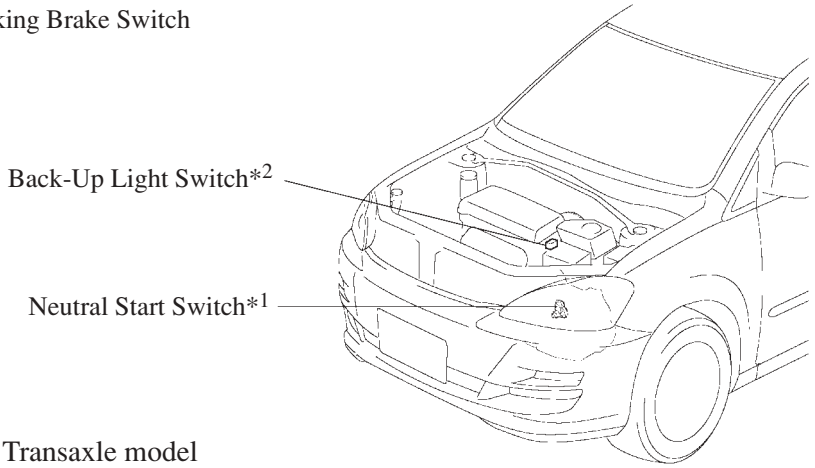

*1: For Automatic Transaxle model
*2: For Manual Transaxle model

258AS33

3. Navigation Screen Display

- The new Avensis Verso has the GPS voice navigation system functions listed below:

: New function

Item		Function
Map Display	Linear Touch Scroll	Enables smooth scrolling by connecting the touch points on the screen
	On-route Scroll	Scrolls the center of the cursor forward and reverse constantly along the route.
	Heading Up	Displays the map so that the direction of the route progression head up during route guidance.
	Map Color Change	Depending on the position of the headlight switch, the screen changes to the day mode or night mode.
	Front Wide	Displays a map in the direction of travel of the vehicle in an enlarged form. (Heading up only)
	Multi-step Scale Display	Changes and displays the map scale in 13 stages.
	Step-less Scale Display	Changes the scale of the map to the desired scale without the basic 13 steps.
	Direct Scale Change	Directly selects and displays the map scale.
	Split-view Display	Displays different modes on a screen that is split into two views.
	Points-of-Interest Display	Displays selected types of marks on the map.
	Color Change	are turned ON.
	Road Number Sign Board Display	Displays the road number on the map.
	Compass Mode Screen	Displays the direction of travel and detailed data of the present location.
	RDS-TMC info. Indication (for Europe model)	Receives FM multiplex broadcasts and displays traffic information on the map screen.
	Map Coverage Info Screen	Displays the map area that is recorded on DVD.
	Whole Route function (except for Australia model)	Changes the display scale of the map screen and displays the whole route.
	Street Name Indication on Scrolled Map	Displays the street name and the city name even when the map screen is being scrolled.
Destination Search	Last Destination Memory	Stores 20 locations of coordinates, names and times that have been set as destinations in the past.
	Hybrid Points-of-interest Search	Narrows the search by names of the points-of-interest, category, and areas.
	Points-of-interest Pinpoint Display	Pinpoints and displays the position of the point-of-interest.
	House Number Search	Searches for a house number.
	Special Memory Point	Sets a pre-registered point as a destination point while driving.
	Nearest Point-of-interest Search List Display	Searches nearest points-of-interest and displays a list.
	Intersection Search	By specifying two streets, the point at which they intersect is set as the destination point. (Only for the intersections of trunk roads.)
	Motorway Entrance/Exit Search	Searches for the destination by the name of the street that connects to a Motorway entrance/exit.
	Coordinate Search	User can input destination like a oasis in the desert etc.
	Telephone Number Search (except for Australia model)	Searches a facility by its telephone number.
	POI, Brand Icon Indication (except for Australia model)	Displays icons for points of interest.

(Continued)

Item	Function	
Route Search	Multiple Destination Setting	Sets multiple destinations. It can also rearrange the sequence of thedestinations.
	Route Search	Searches for multiple routes.
	Search Condition Designation	Searches for the recommended, shortest, and other routes.
	Regulated Road Consideration	Performs search while considering regulated roads.
	Avoidance Area	Avoids a designated area and searches a route.
	Route Search Considering Traffic Info. (for Europe model)	Searches for a route that detours traffic congestion.
	Motorway Mode Screen (except for Australia model)	Displays information on facilities in the vicinity of the motorway exits and entrances.
	Border Guidance (except for Australia model)	Displays a border mark when crossing a border.
Guidance	Destination Direction	Uses arrows along the road to display the direction of the
	Arrow Display	destination during route guidance.
	Off-Route Arrow Display	Uses arrows to display the direction of the destination during off-route.
	Rotary Guidance	Guidance that renders the entry and exit into a rotary as a single branching point.
	Right or Left Turn Guidance	Voice guidance to instruct the direction of travel to be taken.
	Motorway Direction of Travel Guidance (except for Australia model)	Voice guidance to instruct the direction of travel to take on the Motorway.
	Distance Display Destination	Displays the distance from the present location to the destination.
	Motorway Branch Type Specimen Guidance	Type specimen for guidance to a Motorway branch.
	Intersection map Display	Intersection map appears approaching an intersection.
	Turn List Display	Displays a turn list on the right side of the two-screen display.
	Calendar	Anniversary or appointment dates can be input and displayed.

3) Diagnosis Screen Display

The navigation system is equipped with a self-diagnosis function and can display the diagnosis menus shown on the right.
The diagnosis menu contains the following three items.
a) Service Check Menu
b) Display Check
c) Navigation Check

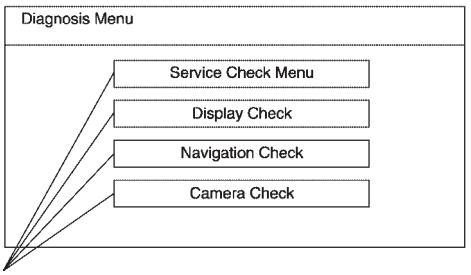

242BE27

Service Tip

The diagnosis menu screen can be displayed according to the procedure given below.
1) Vehicle speed should be 0 km/h (0 mph).
2) Apply the parking brake.
3) Turn the ignition switch to ACC or ON.
4) Push the DISPLAY button.
5) Activate the screen adjustment screen.
6) Alternately touch the upper and lower bottom parts of the left end of the screen 3 times.

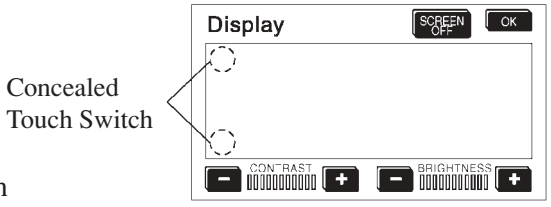

199BE404

For details, refer to the Avensis Verso Repair Manual Supplement (Pub. No. RM1032E).

■CRUISE CONTROL SYSTEM

1. General

- Once the system is set to a desired vehicle speed, the throttle valve position is adjusted automatically to maintain the vehicle speed at that speed without depressed the accelerator pedal.
- The cruise control ECU has been integrated in the engine ECU.

▶ System Diagram ◀

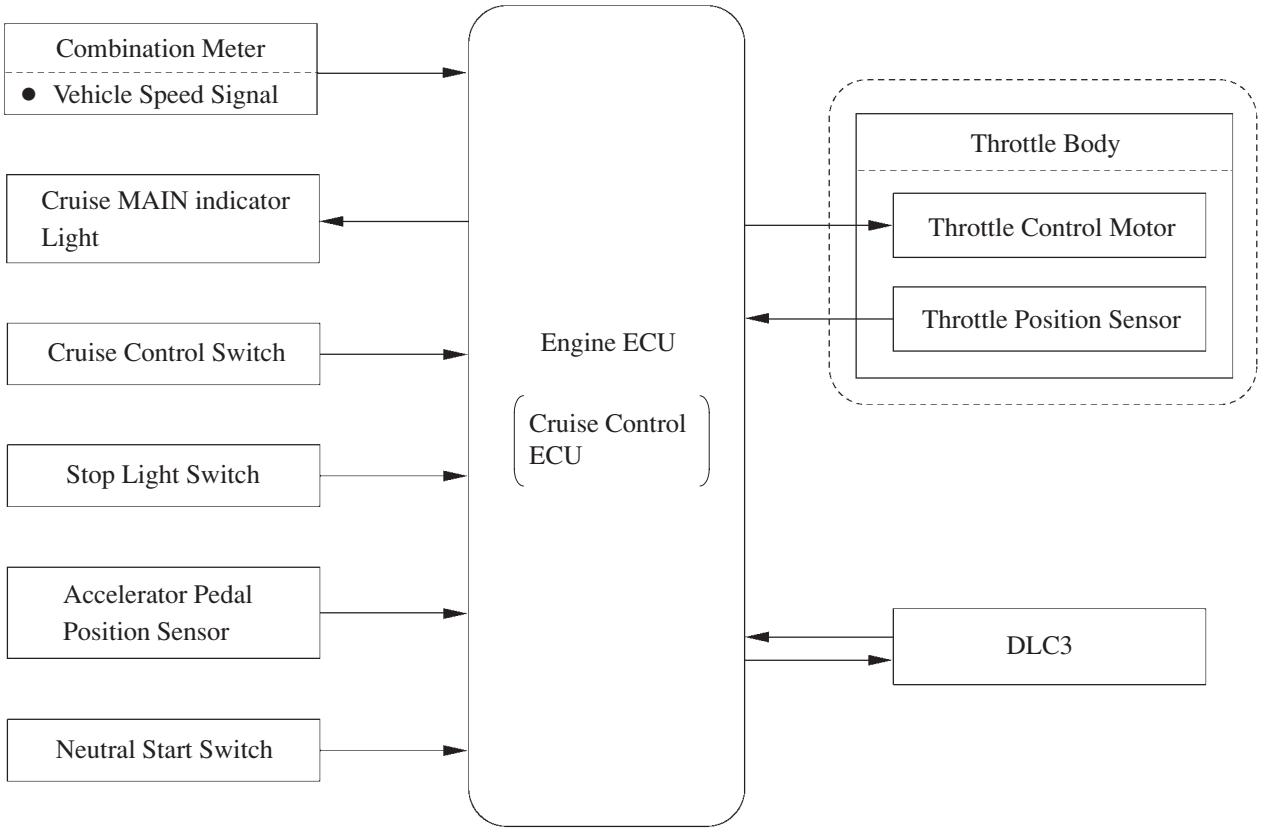

258AS34

2. Layout of Main Components

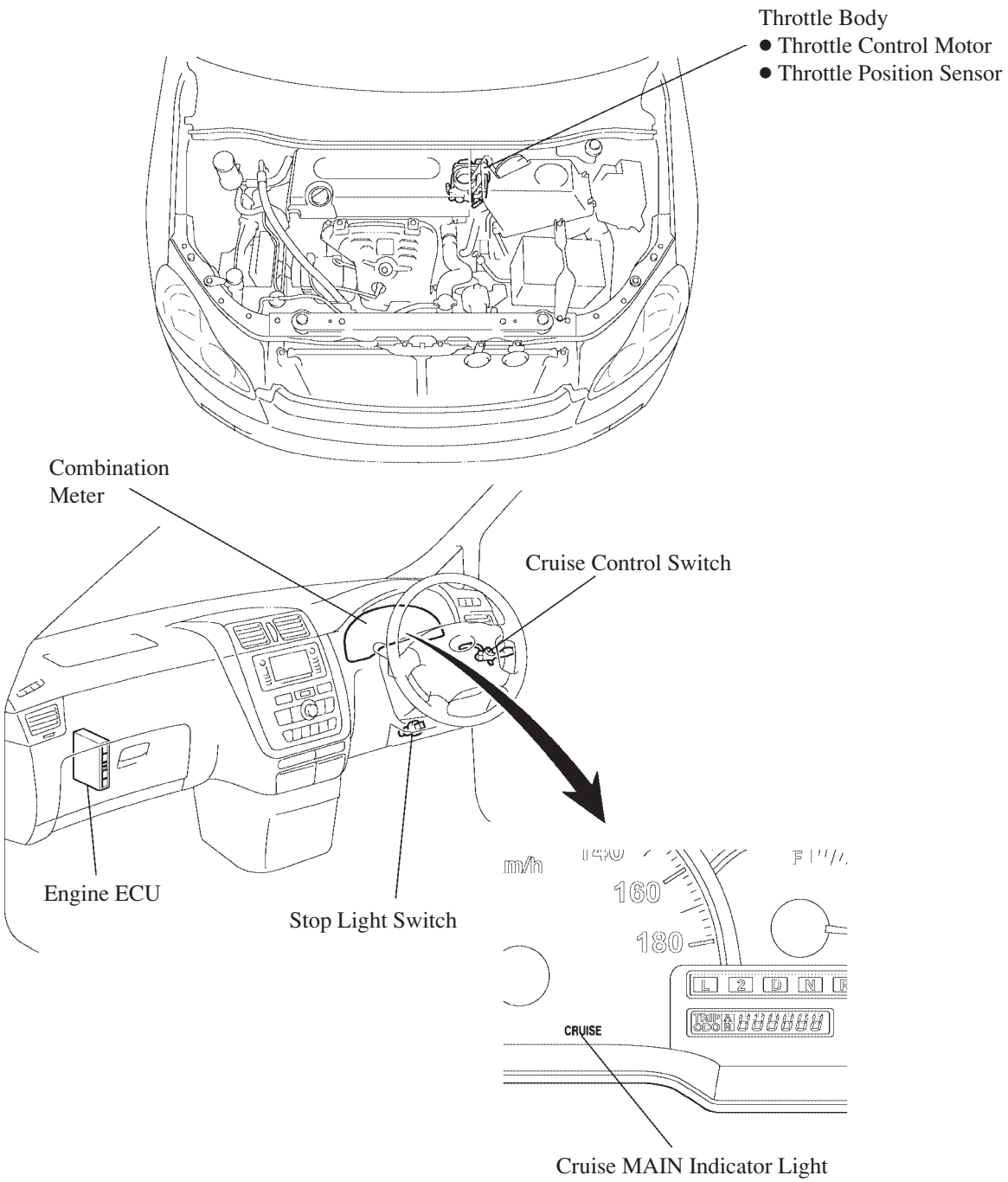

258AS35

3. Function of Cruise Control System

The cruise control has the following functions.

Function	Outline
Constant Speed Control	The engine ECU compares the actual vehicle speed and the set speed and if the vehicle speed is higher than the set speed, it activates the throttle control motor in the throttle closing direction. If the vehicle speed is lower than the set speed, it activates the throttle motor in the throttle opening direction.
Set Control	When this system fulfills the following conditions, and the cruise control switch is pressed to the SET/– side and released with the MAIN switch turned on, the engine ECU stores the vehicle speed and controls it constantly at that speed. ● The vehicle is running within a cruising speed control range [from approx. 36 km/h (23 mph) to 200 km/h (124 mph)].
Coast Control	When the cruise control switch is kept pushed to the SET/– side while running in the cruise control mode, the throttle control motor is energized in the throttle closing direction. The vehicle keeps decelerating the engine ECU stores the vehicle speed when the hand is released from the cruise control switch. From then on, the engine ECU controls the vehicle speed at that speed constantly.
Tap-Down Control	When the difference between the actual vehicle speed and the set speed is less than 5 km/h (3 mph), the set speed can be lowered approx. 1.6 km/h (1 mph) each time by operating the SET/– switch quickly within approx. 0.5 seconds.
Accelerator Control	When the cruise control switch is kept pushed to the RES/+ side while running in the cruise control mode, the throttle control motor is energized in the throttle opening direction. The vehicle keeps accelerating and the engine ECU stores the vehicle speed when the hand is released from the cruise control switch. From then on, the engine ECU controls the vehicle speed at that speed constantly.
Tap-Up Control	When the difference between the actual vehicle speed and the set speed is less than 5 km/h (3 mph), the set speed can be increased approx 1.6 km/h (1 mph) each time by operating the RES/+ switch quickly within approx 0.5 seconds.
Low Speed Limit Control	The low speed limit is the lowest speed that cruise control can be set and is designed at approx. 36 km/h (23 mph). The cruise control cannot be set below that speed. If the vehicle speed drops below that speed while running in the cruise control mode, the cruise control is cancelled automatically and the set speed memorized is cleared.
High Speed Limit Control	The high speed limit, which is the highest speed to which the cruise control can be set, is designed to be approximately 200 km/h (124 mph). Thus, the cruise control cannot be set if the speed at which the vehicle is being driven is higher than the high speed limit. Also, it is not possible to accelerate the vehicle higher than the high speed limit by operating the RES/+ switch.
Manual Cancel Control	If any of the following signals is sent to the engine ECU while the vehicle is running in the cruise control, the cruise control is cancelled accordingly. ● Stop light switch ON signal (Depress the brake pedal) ● D position circuit in Park/Neutral position switch OFF signal (Shift the transmission shift lever from D to N, 2, or L) ● CANCEL switch ON signal ● MAIN switch OFF signal

(Continue)

Function	Outline
Resume Control	After the cruise control mode is cancelled by any of the cancel switches, the mode can be resumed and controlled at the set speed by operating the cruise control switch in the RES/+ direction providing that the vehicle speed has not dropped below the low speed limit [approx. 36 km/h (23 mph)]. The mode cannot be resumed if the vehicle speed once drops below the low speed limit, because the speed in the memory is cleared.
Automatic Cancel Control	When any of the following conditions occur during cruise control driving, the speed that is set in the memory is cleared to cancel the cruise control mode. Furthermore, the cruise main indicator light blinks until the MAIN switch is turned OFF, and the operation of the cruise control is unavailable until the MAIN switch is turned ON again. ● Stop light switch open or short circuit ● The vehicle speed signal is not set for a predetermined period of time (approx. 140 msec) ● ETC-i malfunction
	When any of the following conditions occur during the cruise control driving, the speed that is set in the memory is cleared to cancel the cruise control mode. Furthermore, the cruise main indicator light blinks until the MAIN switch is turned OFF, and the operation of the cruise control is unavailable until the ignition switch is turned OFF again. ● Stop light switch input signal abnormal ● Cancel circuit malfunction
	When any of the following conditions occurs during the cruise control driving, the set speed in the memory is cleared to cancel the cruise control mode. Cruise control can be resumed at the set speed by operating the SET or RESUME switch providing that the vehicle speed is above the lower speed limit [approx. 36 km/h (23 mph)]. ● The vehicle speed falls below the low speed limit [approx. 36 km/h (23 mph)] ● The vehicle speed drops more than 16 km/h (10 mph) below the set speed.
Automatic Transmission Control	When the vehicle is cruising uphill, there is a case where the overdrive turns off depending on the ECT control. After that, when the Engine control ECU judges the end of cruising up from the throttle valve opening angle, the overdrive will turn on again. Also, in case that the overdrive turns off during accelerator or resume control, it will turns on after finishing accelerator or resume control.

4. Diagnosis

- If a malfunction occurs in the cruise control system, during cruise control driving, the engine ECU actuates Auto Cancel of the cruise control and turns on and off the cruise main indicator light to inform the driver of a malfunction. At the same time, the malfunction is stored in memory as a DTC (Diagnostic Trouble Code).
- The DTC can be accessed by connecting a hand-held tester to DLC3 terminal or the SST (09843-18040) to the Tc and CG terminals of the DLC3 and reading the blinking of the cruise main indicator light.
  A hand-held tester can be used to read 5-digit codes. With the SST, 2-digit codes can be read from the number of blinks of the cruise main indicator light. For details, see the Avensis Verso Repair Manual Supplement (Pub. No. RM1032E).
- The DTC listed below is used.

DTC No. 5-digit	Detection Item	DTC No. 2-digit	Circuit Inspection
P0500	Vehicle Speed Sensor “A”	21	Vehicle Speed Sensor Circuit Open
P0503	Vehicle Speed Sensor “A” Intermittent/Erratic/High	23	Vehicle Speed Signal Abnormal
P0571	Brake Switch “A” Circuit	52	Stop Light Switch Circuit Open or Short
P0607	Control Module Performance	54	Input Signal Abnormal

MAJOR TECHNICAL SPECIFICATIONS

Item \ Area				Euripe			
Body Type				Wagon			
Vehicle Grade				—			
Model Code				ACM20R-ARSDKW	ACM20R-ARMDKW	ACM20L-ANSDKW	ACM20L-ANMDKW
Major Dimensions & Vehicle Weights	Overall	Length	mm (in.)	4690 (184.7)	4690 (184.7)	4690 (184.7)	4690 (184.7)
		Width	mm (in.)	1760 (69.3)	1760 (69.3)	1675 (65.9)	1760 (69.3)
		Height	mm (in.)	1675 (65.9), 1725 (67.9)*1	1675 (65.9), 1725 (67.9)*1	1675 (65.9), 1725 (67.9)*1	1675 (65.9), 1725 (67.9)*1
	Wheel Base		mm (in.)	2825 (111.2)	2825 (111.2)	2825 (111.2)	2825 (111.2)
	Tread	Front	mm (in.)	1505 (59.3)	1505 (59.3)	1505 (59.3)	1505 (59.3)
		Rear	mm (in.)	1500 (59.1)	1500 (59.1)	1500 (59.1)	1500 (59.1)
	Room	Length	mm (in.)	2755 (108.5)	2755 (108.5)	2755 (108.5)	2755 (108.5)
		Width	mm (in.)	1505 (59.3)	1505 (59.3)	1505 (59.3)	1505 (59.3)
		Height	mm (in.)	1250 / 1200 (49.2 / 47.2)	1250 / 1200 (49.2 / 47.2)	1250 / 1200 (49.2 / 47.2)	1250 / 1200 (49.2 / 47.2)
	Overhang	Front	mm (in.)	900 (35.7)	900 (35.7)	900 (35.7)	900 (35.7)
		Rear	mm (in.)	965 (38.0)	965 (38.0)	965 (38.0)	965 (38.0)
	Min. Running Ground Clearance		mm (in.)	180 (7.1)	180 (7.1)	180 (7.1)	180 (7.1)
	Angle of Approach		degrees	15.9	15.9	15.9	15.9
	Angle of Departure		degrees	23.1	23.1	23.1	23.1
	Curb Weight	Front	kg (lb)	860 - 900 (1896 - 1984)	825 - 865 (1819 - 1907)	845 - 895 (1863 - 1973)	810 - 860 (1786 - 1896)
		Rear	kg (lb)	630 - 670 (1389 - 1477)	630 - 670 (1389 - 1477)	615 - 655 (1356 - 1444)	615 - 655 (1356 - 1444)
		Total	kg (lb)	1490 - 1570 (3285 - 3461)	1455 - 1535 (3208 - 3384)	1460 - 1550 (3219 - 3417)	1425 - 1515 (3142 - 3340)
	Gross Vehicle Weight	Front	kg (lb)	985 (2172)	950 (2094)	965 (2128)	930 (2050)
		Rear	kg (lb)	1190 (2624)	1190 (2624)	1115 (2458)	1115 (2458)
		Total	kg (lb)	2175 (4795)	2140 (4718)	2080 (4586)	2045 (4508)
	Fuel Tank Capacity		ℓ (Imp.gal.)	60 (13.2)	60 (13.2)	60 (13.2)	60 (13.2)
	Luggage Compartment Capacity		m^3 (cu.ft.)	0.212 (7.5)	0.212 (7.5)	0.212 (7.5)	0.212 (7.5)
Performance	Max. Speed		km / h (mph)	180 (112)	192 (119)	180 (112)	192 (119)
	Max. Cruising Speed		km / h (mph)	—	—	—	—
	Acceleration	0 to 100 km / h	sec.	12.1	11.4	12.1	11.4
		0 to 400 m	sec.	—	—	—	—
	Max. Permissible Speed	1st Gear	km / h (mph)	46 (29)	46 (29)	46 (29)	46 (29)
		2nd Gear	km / h (mph)	86 (53)	86 (53)	86 (53)	86 (53)
		3rd Gear	km / h (mph)	133 (83)	133 (83)	133 (83)	133 (83)
		4th Gear	km / h (mph)	172 (109)	172 (109)	172 (109)	172 (109)
	Min. Turning Radius	Tire	m (ft.)	5.5 (18.0)	5.5 (18.0)	5.5 (18.0)	5.5 (18.0)
		Body	m (ft.)	5.9 (19.4)	5.9 (19.4)	5.9 (19.4)	5.9 (19.4)
Engine	Engine Type			1AZ-FE	1AZ-FE	1AZ-FE	1AZ-FE
	Valve Mechanism			16-Valve, DOHC	16-Valve, DOHC	16-Valve, DOHC	16-Valve, DOHC
	Bore x Stroke		mm (in.)	86.0 x 86.0 (3.39 x 3.39)	86.0 x 86.0 (3.39 x 3.39)	86.0 x 86.0 (3.39 x 3.39)	86.0 x 86.0 (3.39 x 3.39)
	Displacement		cm^3 (cu.in.)	1998 (121.9)	1998 (121.9)	1998 (121.9)	1998 (121.9)
	Compression Ratio			9.8 : 1	9.8 : 1	9.8 : 1	9.8 : 1
	Fuel System			EFI	EFI	EFI	EFI
	Research Octane No. or Cetane No. (Diesel)			95 or higher	95 or higher	95 or higher	95 or higher
	Max. Output		kW / rpm	110 / 6000	110 / 6000	110 / 6000	110 / 6000
	Max. Torque		N·m / rpm	192 / 4000	192 / 4000	192 / 4000	192 / 4000
Engine Electrical	Battery Capacity (5HR)		Voltage & Amp. hr.	12-36	12-36	12-36, 48*2	12-36, 48*2
	Alternator Output		Watts	1200	1200	1200	1200
	Starter Output		kW	1.3	1.2	1.3	1.2
Chassis	Clutch Type			—	Dry, Single	—	Dry, Single
	Transaxle Type			U241E	E356	U241E	E356
	Transmission Gear Ratio	In First		3.943	3.833	3.943	3.833
		In Second		2.197	2.045	2.197	2.045
		In Third		1.413	1.333	1.413	1.333
		In Fourth		1.020	1.028	1.020	1.028
		In Fifth		3.145	0.775	3.145	0.775
		In Reverse		—	3.583	—	3.583
	Counter Gear Ratio			—	—	—	—
	Differential Gear Ratio (Final)			3.120	4.235	3.120	4.235
	Transfer and Rear Differential Gear Ratio			—	—	—	—
	Rear Differential Gear Size		in.	—	—	—	—
	Brake Type	Front		Ventilated Disc	Ventilated Disc	Ventilated Disc	Ventilated Disc
		Rear		Solid Disc	Solid Disc	Solid Disc	Solid Disc
	Parking Brake Type			Duo-Servo	Duo-Servo	Duo-Servo	Duo-Servo
	Brake Booster Type and Size		in.	Single, 10”	Single, 10”	Single, 10”	Single, 10”
	Proportioning Valve Type			—	—	—	—
	Suspension Type	Front		MacPherson Strut	MacPherson Strut	MacPherson Strut	MacPherson Strut
		Rear		Torsion-Beam	Torsion-Beam	Torsion-Beam	Torsion-Beam
	Stabilizer Bar	Front		Standard	Standard	Standard	Standard
		Rear		Standard	Standard	Standard	Standard
	Steering Gear Type			Rack & Pinion	Rack & Pinion	Rack & Pinion	Rack & Pinion
	Steering Gear Ratio (Overall)			16.2 or 16.7	16.2 or 16.7	16.2 or 16.7	16.2 or 16.7
	Power Steering Type			Integral Type	Integral Type	Integral Type	Integral Type

*1: With Roof Rail
*2: Cold Area Package

	Europe					Australia
	Wagon					
	—					
	ACM20L-ARSDKW	ACM20L-ARMDKW	CLM20R-ARMDYW	CLM20L-ANMDYW	CLM20L-ARMDYW	ACM21R-ARSEKQ
	4690 (184.7)	4690 (184.7)	4690 (184.7)	4690 (184.7)	4690 (184.7)	4690 (184.7)
	1675 (65.9)	1760 (69.3)	1760 (69.3)	1760 (69.3)	1760 (69.3)	1675 (65.9)
	1675 (65.9), 1725 (67.9)*1	1675 (65.9), 1725 (67.9)*1	1675 (65.9), 1725 (67.9)*1	1675 (65.9), 1725 (67.9)*1	1675 (65.9), 1725 (67.9)*1	1675 (65.9), 1725 (67.9)*1
	2825 (111.2)	2825 (111.2)	2825 (111.2)	2825 (111.2)	2825 (111.2)	2825 (111.2)
	1505 (59.3)	1505 (59.3)	1505 (59.3)	1505 (59.3)	1505 (59.3)	1505 (59.3)
	1500 (59.1)	1500 (59.1)	1500 (59.1)	1500 (59.1)	1500 (59.1)	1500 (59.1)
	2755 (108.5)	2755 (108.5)	2755 (108.5)	2755 (108.5)	2755 (108.5)	2755 (108.5)
	1505 (59.3)	1505 (59.3)	1505 (59.3)	1505 (59.3)	1505 (59.3)	1505 (59.3)
	1250 / 1200 (49.2 / 47.2)	1250 / 1200 (49.2 / 47.2)	1250 / 1200 (49.2 / 47.2)	1250 / 1200 (49.2 / 47.2)	1250 / 1200 (49.2 / 47.2)	1250 / 1200 (49.2 / 47.2)
	900 (35.7)	900 (35.7)	900 (35.7)	900 (35.7)	900 (35.7)	900 (35.7)
	965 (38.0)	965 (38.0)	965 (38.0)	965 (38.0)	965 (38.0)	965 (38.0)
	180 (7.1)	180 (7.1)	180 (7.1)	180 (7.1)	180 (7.1)	180 (7.1)
	15.9	15.9	15.9	15.9	15.9	15.9
	23.1	23.1	23.1	23.1	23.1	23.1
	850 - 900 (1874 - 1984)	815 - 865 (1797 - 1907)	935 - 980 (2061 - 2161)	920 - 975 (2028 - 2150)	925 - 980 (2039 - 2161)	880 - 895 (1936 - 1969)
	630 - 670 (1389 - 1477)	630 - 670 (1389 - 1477)	625 - 665 (1378 - 1466)	610 - 650 (1345 - 1433)	625 - 665 (1378 - 1466)	620 - 655 (1364 - 1441)
	1480 - 1570 (3263 - 3461)	1445 - 1535 (3186 - 3384)	1560 - 1645 (3439 - 3627)	1530 - 1625 (3373 - 3583)	1550 - 1645 (3417 - 3627)	1500 - 1550 (3300 - 3410)
	985 (2172)	950 (2094)	1065 (2348)	1045 (2304)	1065 (2348)	970 (2134)
	1190 (2624)	1190 (2624)	1185 (2613)	1110 (2447)	1185 (2613)	1225 (2695)
	2175 (4795)	2140 (4718)	2250 (4960)	2155 (4751)	2250 (4960)	2195 (4829)
	60 (13.2)	60 (13.2)	60 (13.2)	60 (13.2)	60 (13.2)	60 (13.2)
	0.212 (7.5)	0.212 (7.5)	0.212 (7.5)	0.212 (7.5)	0.212 (7.5)	0.169 (6.0)
	180 (112)	192 (119)	180 (112)	180 (112)	180 (112)	180 (112)
	—	—	—	—	—	—
	12.1	11.4	12.5	12.5	12.5	—
	—	—	—	—	—	—
	46 (29)	46 (29)	43 (27)	43 (27)	43 (27)	—
	86 (53)	86 (53)	81 (50)	81 (50)	81 (50)	—
	133 (83)	133 (83)	124 (77)	124 (77)	124 (77)	—
	172 (109)	172 (109)	170 (106)	170 (106)	170 (106)	—
	5.5 (18.0)	5.5 (18.0)	5.5 (18.0)	5.5 (18.0)	5.5 (18.0)	5.5 (18.0)
	5.9 (19.4)	5.9 (19.4)	5.9 (19.4)	5.9 (19.4)	5.9 (19.4)	5.9 (19.4)
	1AZ-FE	1AZ-FE	1CD-FTV	1CD-FTV	1CD-FTV	2AZ-FE
	16-Valve, DOHC	16-Valve, DOHC	16-Valve, DOHC	16-Valve, DOHC	16-Valve, DOHC	16-Valve, DOHC
	86.0 x 86.0 (3.39 x 3.39)	86.0 x 86.0 (3.39 x 3.39)	82.2 x 94.0 (3.24 x 3.7)	82.2 x 94.0 (3.24 x 3.7)	82.2 x 94.0 (3.24 x 3.7)	88.5 x 96.0 (3.49 x 3.79)
	1998 (121.9)	1998 (121.9)	1995 (121.7)	1995 (121.7)	1995 (121.7)	2369 (144.1)
	9.8 : 1	9.8 : 1	18.6 : 1	18.6 : 1	18.6 : 1	9.6 : 1
	EFI	EFI	Common-Rail Type	Common-Rail Type	Common-Rail Type	EFI
	95 or higher	95 or higher	48 or higher	48 or higher	48 or higher	91 or higher
	110 / 6000	110 / 6000	85 / 4000	85 / 4000	85 / 4000	115 / 5700
	192 / 4000	192 / 4000	250 / 1800 - 3000	250 / 1800 - 3000	250 / 1800 - 3000	221 / 4000
	12-36, 48*2	12-36, 48*2	12-55	12-55, 64*2	12-55, 64*2	12-48
	1200	1200	1560	1560	1560	1560
	1.3	1.2	1.4	1.4, 2.2*2	1.4, 2.2*2	1.3
	—	Dry, Single	Dry, Single	Dry, Single	Dry, Single	—
	U241E	E356	E355	E355	E355	U241E
	3.943	3.833	3.833	3.833	3.833	3.943
	2.197	2.045	2.045	2.045	2.045	2.197
	1.413	1.333	1.333	1.333	1.333	1.413
	1.020	1.028	0.972	0.972	0.972	1.020
	3.145	0.775	0.775	0.775	0.775	3.145
	—	3.583	3.583	3.583	3.583	—
	—	—	—	—	—	—
	3.120	4.235	3.684	3.684	3.684	2.923
	—	—	—	—	—	—
	—	—	—	—	—	—
	Ventilated Disc	Ventilated Disc	Ventilated Disc	Ventilated Disc	Ventilated Disc	Ventilated Disc
	Solid Disc	Solid Disc	Solid Disc	Solid Disc	Solid Disc	Solid Disc
	Duo-Servo	Duo-Servo	Duo-Servo	Duo-Servo	Duo-Servo	Duo-Servo
	Single, 10”	Single, 10”	Single, 9”	Single, 9”	Single, 9”	Single, 10”
	—	—	—	—	—	—
	MacPherson Strut	MacPherson Strut	MacPherson Strut	MacPherson Strut	MacPherson Strut	MacPherson Strut
	Torsion-Beam	Torsion-Beam	Torsion-Beam	Torsion-Beam	Torsion-Beam	Torsion-Beam
	Standard	Standard	Standard	Standard	Standard	Standard
	Standard	Standard	Standard	Standard	Standard	Standard
	Rack & Pinion	Rack & Pinion	Rack & Pinion	Rack & Pinion	Rack & Pinion	Rack & Pinion
	16.2 or 16.7	16.2 or 16.7	16.2 or 16.7	16.2 or 16.7	16.2 or 16.7	16.2 or 16.7
	Integral Type	Integral Type	Integral Type	Integral Type	Integral Type	Integral Type

*1: With Roof Rail
*2: Cold Area Package

Item / Area				General Countries
Body Type				Wagon
Vehicle Grade				—
Model Code				ACM20R-ARSEK
Major Dimensions & Vehicle Weights	Overall	Length	mm (in.)	4690 (184.7)
		Width	mm (in.)	1675 (65.9)
		Height	mm (in.)	1675 (65.9), 1725 (67.9)*1
	Wheel Base		mm (in.)	2825 (111.2)
	Tread	Front	mm (in.)	1505 (59.3)
		Rear	mm (in.)	1500 (59.1)
	Room	Length	mm (in.)	2755 (108.5)
		Width	mm (in.)	1505 (59.3)
		Height	mm (in.)	1250 / 1200 (49.2 / 47.2)
	Overhang	Front	mm (in.)	900 (35.7)
		Rear	mm (in.)	965 (38.0)
	Min. Running Ground Clearance		mm (in.)	180 (7.1)
	Angle of Approach		degrees	15.9
	Angle of Departure		degrees	23.1
	Curb Weight	Front	kg (lb)	870 - 885 (1914 - 1947)
		Rear	kg (lb)	620 - 655 (1364 - 1441)
		Total	kg (lb)	1490 - 1540 (3278 - 3388)
	Gross Vehicle Weight	Front	kg (lb)	960 (2112)
		Rear	kg (lb)	1225 (2695)
		Total	kg (lb)	2185 (4707)
	Fuel Tank Capacity		ℓ (Imp.gal.)	60 (13.2)
	Luggage Compartment Capacity		m^3 (cu.ft.)	0.212 (7.5)
Performance	Max. Speed		km / h (mph)	180 (112)
	Max. Cruising Speed		km / h (mph)	—
	Acceleration	0 to 100 km / h	sec.	12.1
		0 to 400 m	sec.	—
	Max. Permissible Speed	1st Gear	km / h (mph)	46 (29)
		2nd Gear	km / h (mph)	86 (53)
		3rd Gear	km / h (mph)	133 (83)
		4th Gear	km / h (mph)	172 (109)
	Min. Turning Radius	Tire	m (ft.)	5.5 (18.0)
		Body	m (ft.)	5.9 (19.4)
Engine	Engine Type			1AZ-FE
	Valve Mechanism			16-Valve, DOHC
	Bore x Stroke		mm (in.)	86.0 x 86.0 (3.39 x 3.39)
	Displacement		cm^3 (cu.in.)	1998 (121.9)
	Compression Ratio			9.8 : 1
	Fuel System			EFI
	Research Octane No. or Cetane No. (Diesel)			95 or higher
	Max. Output		kW / rpm	110 / 6000
	Max. Torque		N·m / rpm	192 / 4000
Engine Electrical	Battery Capacity (5HR)		Voltage & Amp. hr.	12-36
	Alternator Output		Watts	1200
	Starter Output		kW	1.3
Chassis	Clutch Type			—
	Transaxle Type			U241E
	Transmission Gear Ratio	In First		3.943
		In Second		2.197
		In Third		1.413
		In Fourth		1.020
		In Fifth		3.145
		In Reverse		—
	Counter Gear Ratio			—
	Differential Gear Ratio (Final)			3.120
	Transfer and Rear Differential Gear Ratio			—
	Rear Differential Gear Size		in.	—
	Brake Type	Front		Ventilated Disc
		Rear		Solid Disc
	Parking Brake Type			Duo-Servo
	Brake Booster Type and Size		in.	Single, 10”
	Proportioning Valve Type			—
	Suspension Type	Front		MacPherson Strut
		Rear		Torsion-Beam
	Stabilizer Bar	Front		Standard
		Rear		Standard
	Steering Gear Type			Rack & Pinion
	Steering Gear Ratio (Overall)			16.2 or 16.7
	Power Steering Type			Integral Type

*1: With Roof Rail
*2: Cold Area Package

LAND CRUISER (100 series)

OUTLINE OF NEW FEATURES

The following changes are made for the new Land Cruiser (100 series).

1. Model Line-up

A442F Automatic Transmission of the 1HD-FTE Engine on the Europe model has been discontinued and the A750F Automatic Transmission has been re-introduced.

2. Exterior

The design of the side stripes, provided as an option on all models, have been changed.

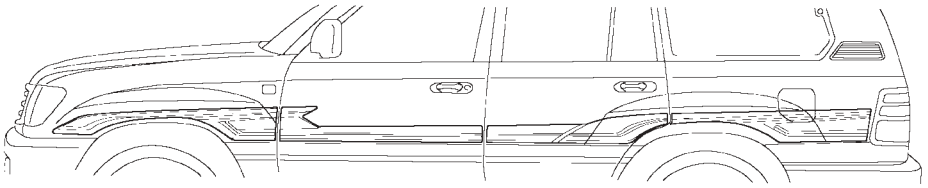

STD and GX Grade

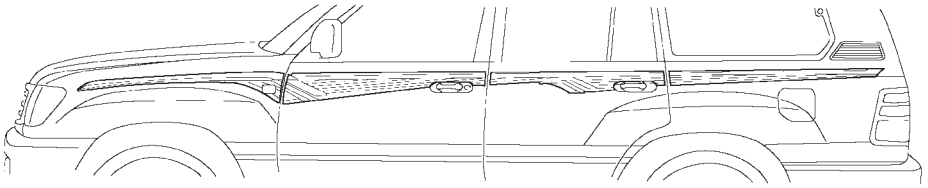

VX Grade

258LC04

3. Interior

The steering wheel of the 5-speed automatic transmission mode has been changed from urethane to a leather-wrapped type.

4. All Engines

The TOYOTA genuine Super Long Life Coolant (SLLC) has been adopted. As result, the maintenance interval has been extended.

5. A750F Automatic Transmission

The following areas of the A750F automatic transmission have been changed.

- Fluid type has been changed from the ATF type T-IV to the ATF WS. For details, see page 291.
- ATF level detection mechanism has been adopted. For details, see page 292.

6. Brake Control System (ABS with EBD, Brake Assist, A-TRC and VSC System)

- The brake control system (ABS with EBD, Brake Assist, A-TRC and VSC system) has been added to the models equipped with the 1HD-FTE engine and 5-speed automatic transmission for Australia and Europe, as optional equipment.
  It is available as a set with the VGRS (Variable Gear Ratio Steering) system on the models equipped with the 1HD-FTE engine and 5-speed automatic transmission for Europe.
- Along with the changes made to the skid control ECU, the diagnosis detection performance has been improved.

7. Rear No.1 Seat

A CRS tether anchor bracket for securing a child seat has been provided on the Europe model.

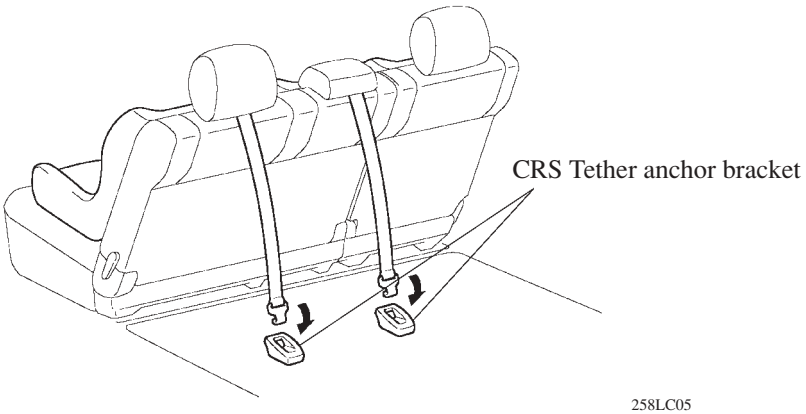

258LC05

8. Wind Washer System

The inlet of the washer tank has been widened in order to shorten the length of time it takes to fill the washer tank.

9. Headlight Leveling System

The headlight leveling system has been added to the models for Saudi Arabia, expect for the model with the active height control suspension and skyhook TEMS (Toyota Electronic Modulated Suspension).

10. Heater Control Panel

An outside temperature indication function has been added to the heater control panel on the GX and STD grades for the G.C.C. countries.

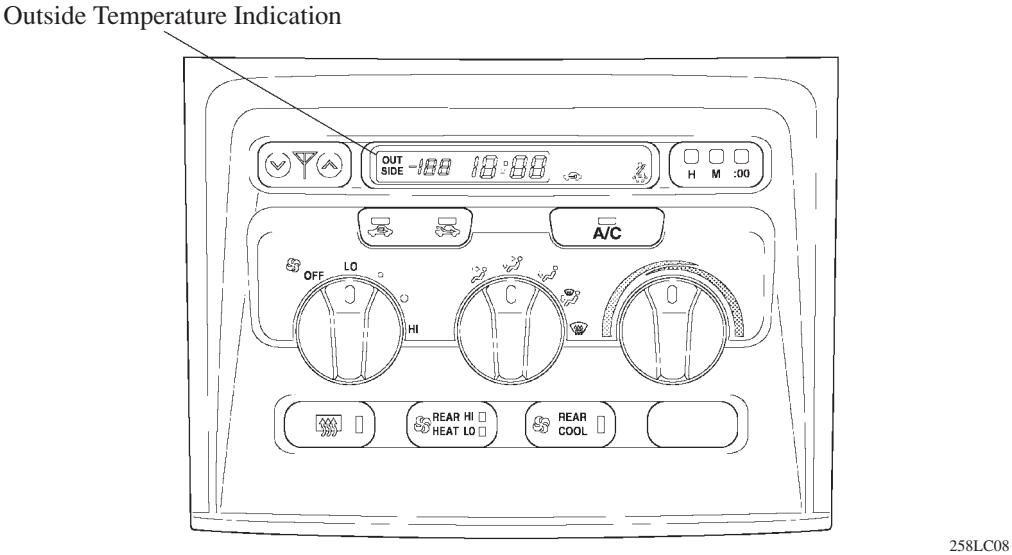

258LC08

11. Combination Meter

- VSC and VGRS (Variable Gear Ratio Steering) indicators have been added to the 1HD-FTE engine model for Europe.
- A VSC indicator has been added to the 1HD-FTE engine model for Australia.
- Along with the new provision of the 5-speed automatic transmission on the 1HD-FTE engine model for Europe, the shift indicator in the combination meter has been changed for 5-speed application.

12. Multi Display

- The multi display contains an updated navigation system in which new functions have been added.
- A hands-free function that supports the Bluetooth communication protocol has been newly added in the multi display.

13. Rear View Monitor System

The rear view monitor system has been newly added as an option in Europe.

MODEL CODE

UZJ100 L–G N A E K W

1 2 3 4 5 6 7 8

1	BASIC MODEL CODE		
	CODE	ENGINE	FRONT SUSPENSION
	FZJ100	1FZ-FE	IFS*1 (Double Wishbone)
	UZJ100	2UZ-FE	
	HDJ100	1HD-FTE	
	FZJ105	1FZ-FE	RFS*2 (Leading Arm)
	HZJ105	1HZ	

2	STEERING WHEEL POSITION
	L: Left-Hand Drive R: Right-Hand Drive

3	BODY TYPE
	G: Station Wagon

4	BACK DOOR TYPE
	C: Swing Back Door N: Lift-up Back Door

*1: IFS (Independent Front Suspension)
*2: RFS (Rigid Axle Front Suspension)

5	GEAR SHIFT TYPE
	M: 5-Speed Manual, Floor P : 4-Speed Automatic, Floor A : 5-Speed Automatic, Floor

6	GRADE
	R: STD N: GX E : VX

7	ENGINE SPECIFICATION
	K: DOHC and EFI S : Diesel Z: Multi Valve, Turbocharger and EFI

8	DESTINATION
	W: Europe Q : Australia V : G.C.C. (Gulf Cooperation Council) Countries

MODEL LINE-UP

DESTINATION	ENGINE	BACK DOOR	GRADE	FRONT SUSPENSION	DRIVE TYPE	TRANSMISSION			
						5-Speed Manual		4-Speed Automatic	5-Speed Automatic
						R151F	H151F	A442F	A750F
Europe	2UZ-FE	Lift-Up	VX	IFS (Double Wishbone)	Full-Time	—	—	—	UZJ100$^{R}_{L}$-GNAEKW
	1HD-FTE					—	HDJ100$^{R}_{L}$-GNMEZW	—	UZJ100$^{R}_{L}$-GNAEZW
		Swing	STD			—	HDJ100L-GCMRZW	—	—
Australia	2UZ-FE	Lift-Up	GX	IFS (Double Wishbone)	Full-Time	—	UZJ100R-GNMNKQ	—	UZJ100R-GNANKQ
			VX			—	—	—	UZJ100R-GNAEKQ
	1HZ	Swing	STD	RFS (Leading Arm)	Part-Time	HZJ105R-GCMRSQ	—	—	—
		Lift-Up	GX		Full-Time	ZJ10H5R-GNMNSQ	—	—	—
	1HD-FTE					—	HDJ100R-GNMNZQ	—	HD100R-GNANZQ
			VX			—	—	—	HDJ100R-GNAEZQ
G.C.C. Countries	1FZ-FE	Swing	STD	IFS (Double Wishbone)	Part-Time	—	FZJ100L-GCMRKV	—	—
			GX		Part-Time (Full-Time)	—	FZJ100L-GCMNKV	FZJ100L-GCPNKV	—
		Lift-Up				—	FZJ100L-GNMNKV	FZJ100L-GNPNKV	—
	2UZ-FE	Swing	VX		Full-Time	—	FZJ100L-GCMEKV	—	UZJ100L-GCAEKV
		Lift-Up				—	FZJ100L-GNMEKV	—	UZJ100L-GNAEKV
	1HZ	Swing	GX	RFS (Leading Arm)	Part-Time (Full-Time)	HZJ105L-GCMNSV	—	—	—
General Countries	1FZ-FE	Swing	STD	RFS (Leading Arm)	Part-Time	—	FZJ105L-GCMRK	—	—
			GX		Part-Time (Full-Time)	—	FZJ105L-GCMNK	—	—
		Lift-Up				—	FZJ105$^{R}_{L}$-GNMNK	—	—
	2UZ-FE		VX	IFS (Double Wishbone)	Full-Time	—	—	—	UZJ100L-GNAEK
	1HZ	Swing	STD	RFS (Leading Arm)	Part-Time (Full-Time)	HZJ105$^{R}_{L}$-GCMRS	—	—	—
			GX		Part-Time (Full-Time)	HZJ105$^{R}_{L}$-GCMNS	—	—	—
		Lift-Up				HZJ105$^{R}_{L}$-GNMNS	—	—	—
	1HD-FTE	Swing	VX	IFS (Double Wishbone)	Full-Time	—	HDJ100L-GCMEZ	—	—
		Lift-Up				—	HDJ100$^{R}_{L}$-GNMEZ	—	HDJ100L-GNAEZ

: New

NEW FEATURES

■ALL ENGINES

Cooling System

The TOYOTA genuine Super Long Life Coolant (SLLC) has been adopted. As result, the maintenance interval has been extended. The following chart for all engine model.

▶ Specifications for Europe ◀

Model					New	Previous
Engine Coolant	Capacity Liters (US qts, Imp. qts)	2UZ-FE Engine	Automatic Transmission	Without Rear Heater	14.8 (15.6, 13.0)	←
				With Rear Heater	15.3 (16.2, 13.5)	←
		1HD-FTE Engine	Manual Transmission	Without Rear and power Heater	13.2 (14.0, 11.6)	←
				Rear Heater	13.7 (14.5, 12.1)	←
				Power Heater	14.2 (15.0, 12.6)	←
			Automatic Transmission	Without Rear and power Heater	12.8 (13.5, 11.3)	←
				Rear Heater	13.3 (14.1, 12.1)	←
				Power Heater	13.8 (14.6, 12.2)	←
	Type				TOYOTA Genuine (SLLC)	TOYOTA Genuine (LLC)
	Color				Pink	Red
	Maintenance Intervals	First time			160,000 km (100,000 mile)	60,000km (37,500 mile)
		Subsequent			Every 80,000 km (50,000 mile)	Every 30,000km (18,000 mile)

- SLLC is pre-mixed (50% coolant and 50% distilled water), so no dilution is needed when adding or replacing SLLC in the vehicle.
- If LLC is mixed with SLLC, the interval for LLC (every 30,000 km / 18,000 mile or 24 months) should be used.
- You can also apply the new maintenance interval (every 80,000 km / 50,000 mile) to vehicles initially filled with LLC (red-colored), if you use SLLC (pink-colored) for the coolant change.

▶ Australia, G.C.C. and General countries Specifications ◀

<table>
<tr><th colspan="6">Model</th><th>New</th><th>Previous</th></tr>
<tr><td rowspan="15">Engine Coolant</td><td rowspan="13">Capacity
Liters
(US pts,
Imp. qts)</td><td rowspan="4">2UZ-FE Engine</td><td rowspan="2">Manual Transmission</td><td colspan="2">Without Rear Heater</td><td>15.2 (16.1,13.4)</td><td>←</td></tr>
<tr><td colspan="2">With Rear Heater</td><td>15.7 (16.6, 13.8)</td><td>←</td></tr>
<tr><td rowspan="2">Automatic Transmission</td><td colspan="2">Without Rear Heater</td><td>14.8 (15.6, 13.0)</td><td>←</td></tr>
<tr><td colspan="2">With Rear Heater</td><td>15.3 (16.2, 13.5)</td><td>←</td></tr>
<tr><td rowspan="4">1FZ-FE Engine</td><td rowspan="3">Manual Transmission</td><td colspan="2">G.C.C countries</td><td>13.9 (14.7, 12.2)</td><td>←</td></tr>
<tr><td rowspan="2">Other</td><td>Without Rear Heater</td><td>13.8 (14.7, 12.3)</td><td>←</td></tr>
<tr><td>With Rear Heater</td><td>14.3 (15.1, 12.6)</td><td>←</td></tr>
<tr><td colspan="3">Automatic Transmission</td><td>14.0</td><td>←</td></tr>
<tr><td rowspan="4">1HD-FTE Engine</td><td rowspan="2">Manual Transmission</td><td colspan="2">Without Rear and power Heater</td><td>13.2 (14.0, 11.6)</td><td>←</td></tr>
<tr><td colspan="2">Rear Heater</td><td>13.7 (14.5, 12.1)</td><td>←</td></tr>
<tr><td rowspan="2">Automatic Transmission</td><td colspan="2">Without Rear and power Heater</td><td>12.8 (13.5, 11.3)</td><td>←</td></tr>
<tr><td colspan="2">Rear Heater</td><td>13.3 (14.1, 12.1)</td><td>←</td></tr>
<tr><td rowspan="3">1HZ Engine</td><td rowspan="2">Manual Transmission</td><td colspan="2">Without Rear Heater</td><td>12.9</td><td>←</td></tr>
<tr><td colspan="2">With Rear Heater</td><td>13.4</td><td>←</td></tr>
<tr><td colspan="3">Automatic Transmission</td><td>—</td><td>←</td></tr>
<tr><td colspan="5">Type</td><td>TOYOTA Genuine (SLLC)</td><td>TOYOTA Genuine (LLC)</td></tr>
<tr><td colspan="5">Color</td><td>Pink</td><td>Red</td></tr>
<tr><td colspan="4" rowspan="2">Maintenance Intervals</td><td>First time</td><td>160,000 km (100,000 mile)</td><td rowspan="2">Every 40,000km (25,000 mile) or 24 months Whichever come first</td></tr>
<tr><td>Subsequent</td><td>Every 80,000 km (50,000 mile)</td></tr>
</table>

- SLLC is pre-mixed (50% coolant and 50% distilled water), so no dilution is needed when adding or replacing SLLC in the vehicle.
- If LLC is mixed with SLLC, the interval for LLC (every 40,000 km / 25,000 mile or 24 months) should be used.
- You can also apply the new maintenance interval (every 80,000 km / 50,000 mile) to vehicles initially filled with LLC (red-colored), if you use SLLC (pink-colored) for the coolant change.

■A750F AUTOMATIC TRANSMISSION

1. ATF WS

- The T-IV type ATF (Automatic Transmission Fluid) of the A750F automatic transmission on the previous Land Cruiser has been changed to the WS type on the new Land Cruiser. The reduced viscosity in the practical operating temperature range of the ATF WS enables to reduce drag loss and improve fuel economy.
- The ATF WS is not interchangeable with other types of ATF (ATF type T-IV, or D-II).

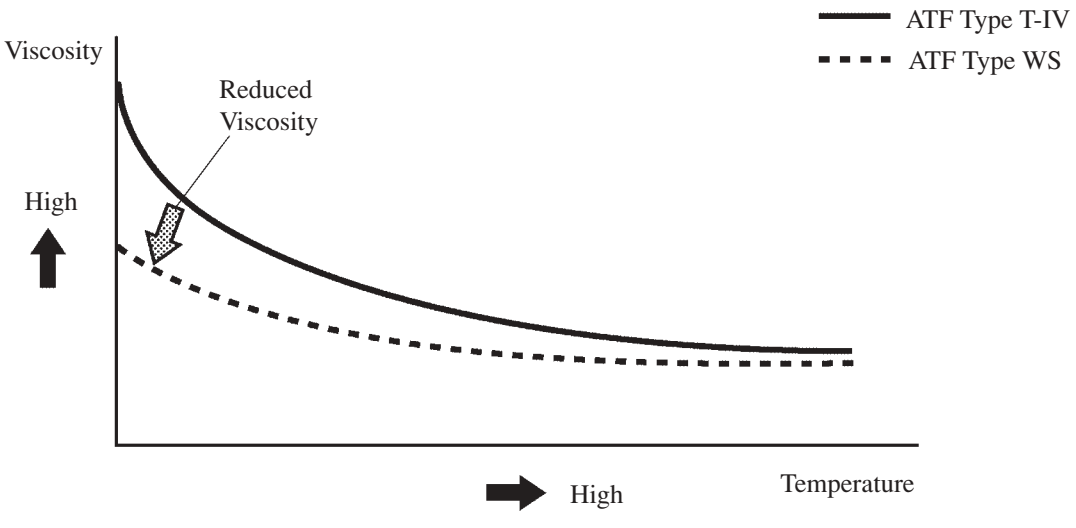

Service Tip

If a vehicle with a transmission filled with ATF WS is replenished with other type of ATF, the vehicle might not start off at extremely low temperatures. However, it will start off after it has been warmed up for a few minutes.

2. ATF Filling Procedures

- The ATF level gauge (dip-stick) has been discontinued, and the ATF inspection method and the oil level inspection method have been changed.
- This mechanism consists of a refill plug, overflow plug, ATF temperature sensor No.2, and A/T OIL TEMP warning light.

Service Tip

ATF Filling procedures using SST (09843-18020):
When a large amount of ATF needs to be filled (i. e. after removal and installation of oil pan or torque converter), perform the procedure from step 1. When the small amount of ATF is required (i. e. removal and installation of the oil cooler tube, repair of oil leak), perform the procedure from step 7.
1) Raise the vehicle keeping it level.
2) Remove the refill plug and overflow plug.
3) Fill ATF from the refill plug until it overflows from the overflow plug.
4) Install the overflow plug.
5) Fill the specified amount of ATF determined by procedure and install the refill plug.
   - Example

Procedure	Amount Liters (US qts, Imp.qts)
Removal and installation of an oil pan (including oil drainage)	1.7 (1.80, 1.50)
Removal and installation of a transmission valve body	4.3 (4.54, 3,78)
Replacement of a torque converter	5.4 (5.70, 4.75)

6) Lower the vehicle down.
7) Use the SST (09843-18020) to short the terminals Tc and CG of the DLC3 connector:
8) Start the engine and allow it to idle.
   - A/C switch must be turned OFF.
9) Move the shift lever slowly through each of the positions from the P to the L position, and move it back to the P position.
10) Move the shift lever from the D position, and quickly move then back and forth between N and D (once per less than 1.5 seconds) for at least six seconds. This will activate the oil temperature detection mode.

Standard: The A/T OIL TEMP warning light remains illuminated for 2 seconds and it goes off.
11) Return the shift lever to the P position and disconnect the terminal Tc.
12) Idle the engine to raise the oil temperature.
13) Immediately after the ATF OIL TEMP warning light turns on, lift the vehicle up.
   - The A/T OIL TEMP warning light will indicate the ATF temperature according to the following table. (Insert table here)

ATF Temp.	Below proper ATF temperature	Proper ATF temperature	More than proper ATF temperature
A/T OIL TEMP Warning light	Turn OFF	Turn ON	Blinking

14) Remove the overflow plug and adjust oil quantity.
   - If the ATF overflows, go to step 17, and if the ATF does not overflow, go to step 15.
15) Remove the refill plug.
16) Fill ATF to the refill plug until it flows out from the overflow plug.
17) When the ATF flow slows to a trickle, install the overflow plug.
18) Install the refill plug (only if the refill plug has been removed).
19) Lower the vehicle down.
20) Turn the ignition switch OFF to stop the engine.

For details about the ATF Filling procedures, see the Land Cruiser Repair Manual (Pub. No. RM1072E)

■BRAKE CONTROL SYSTEM (ABS with EBD, Brake Assist, A-TRC and VSC System)

- The conditions for detecting malfunctions in the speed sensor have been added to realize an excellent malfunction detection performance.
- The TS terminal, which was located at the DLC1 and DLC3 connectors to enable the brake control system to check the speed sensors, has been discontinued. Therefore, use a hand-held tester to check the speeds sensors.

▶ Speed Sensor Malfunction Detection Conditions ◀

: New

DTC No.	DTC Detecting Condition
C0200 / 31 C0205 / 32 C0210 / 33 C0215 / 34	Detection of any of conditions 1. through 4.: 1. At vehicle speed of 10km/h(6 mph) or more, pulses are not input for 15 sec. 2. Momentary interruption of the speed sensor signal occurs at least 7 times in the time between switching it OFF. 3. Continuous noise occurs into the speed sensor signals with the vehicle speed at 20 km/h (12 mph) or more. 4. The condition that the speed sensor signal circuit is open continues for 0.12 sec. Or more.
	5. ABS inactive. 6. Brake pedal released. 7. Parking brake lever disengaged. 8. Rear differential unlocked.

■MULTI DISPLAY

1. General

- The design of the screen has been improved in the navigation system in order to improve its visibility. Furthermore, new functions have been added for improved convenience.
- On the Europe model, a voice recognition function has been adopted in the multi display to enable the user to turn the air conditioner ON/OFF and set its temperature.
  This function recognizes voice commands in English and German.

▶ System Diagram ◀

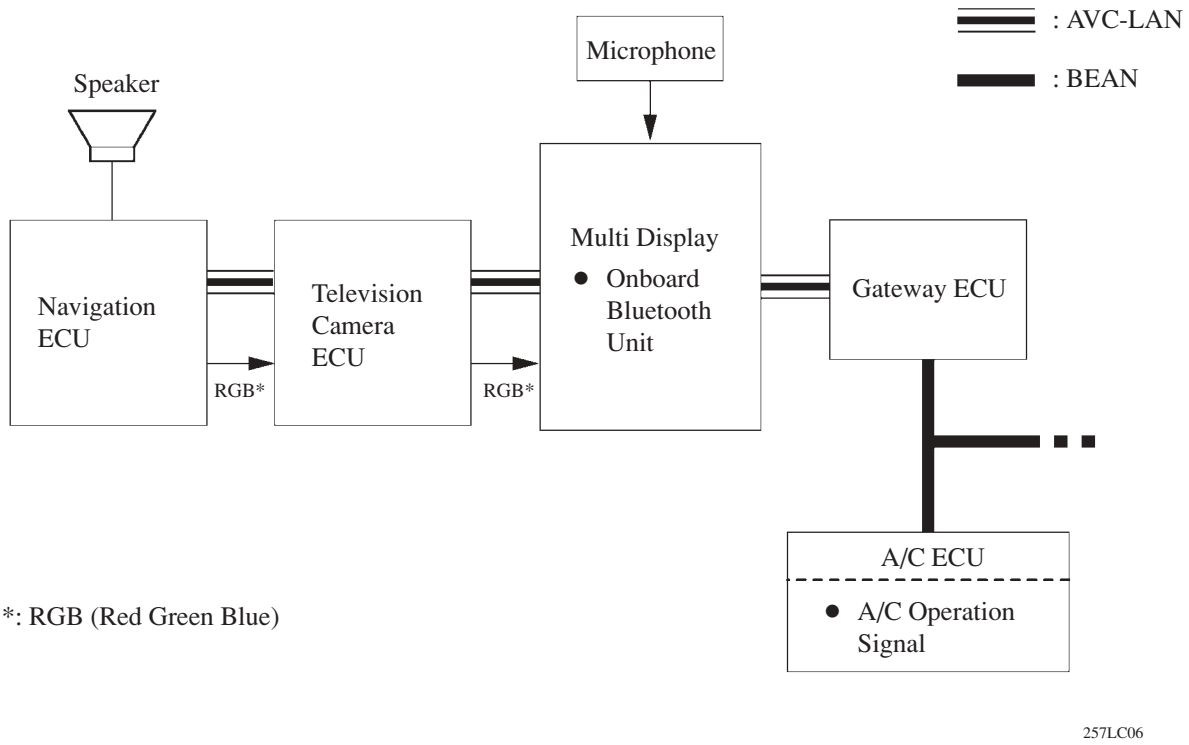

257LC06

2. Layout of Main Components

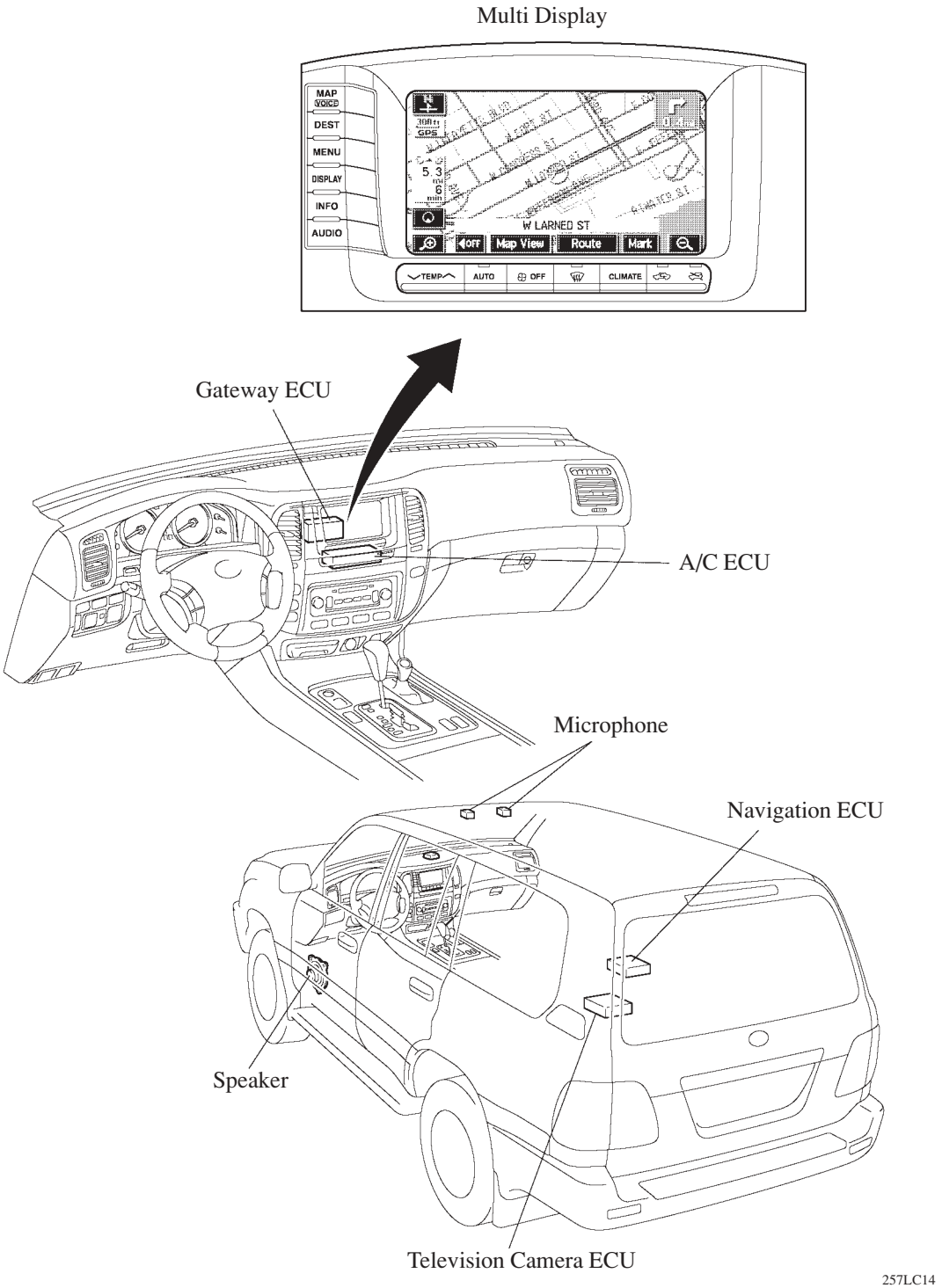

5

3. Navigation System

The new Land Cruiser has the GPS voice navigation system functions listed below

:New function

Item		Function
Map Display	Linear Touch Scroll	Enables smooth scrolling by connecting the touch points on the screen.
	On-route Scroll	Scrolls the center of the cursor forward and reverse constantly along the route.
	Heading Up	Displays the map so that the direction of the route progression head up during route guidance.
	Map Color Change	Depending on the position of the headlight switch, the screen changes to the day mode or night mode.
	Front Wide	Displays a map in the direction of travel of the vehicle in an enlarged form. (Heading up only)
	Multi-step Scale Display	Changes and displays the map scale in 13 stages.
	Step-less Scale Display	Changes the scale of the map to the desired scale without the basic 13 steps.
	Direct Scale Change	Directly selects and displays the map scale.
	Split-view Display	Displays different modes on a screen that is split into two views.
	Points-of-Interest Display	Displays selected types of marks on the map.
	Road Number Sign Board Display	Displays the road number on the map.
	Compass Mode Screen	Displays the direction of travel and detailed data of the present location.
	RDS-TMC info. Indication (for Europe model)	Receives FM multiplex broadcasts and displays traffic information on the map screen.
	Map Coverage info Screen	Displays the map area that is recorded on DVD.
	Whole Route Function (except for Australia model)	Changes the display scale of the map screen and displays the whole route.
	Street Name Indication on Scrolled Map	Displays the street name and the city name even when the map screen is being scrolled.
Destination Search	Last Destination Memory	Stores 20 locations of coordinates, names and times that have been set as destinations in the past.
	Hybrid Points-of-interest Search	Narrows the search by names of the points-of-interest, category, and areas.
	Points-of-interest Pinpoint Display	Pinpoints and displays the position of the point-of-interest.
	House Number Search	Searches for a house number.
	Special Memory Point	Sets a pre-registered point as a destination point while driving.
	Nearest Point-of-interest Search List Display	Searches nearest points-of-interest and displays a list.
	Intersection Search	By specifying two streets, the point at which they intersect is set as the destination point. (only for the intersections of trunk roads)
	Motorway Entrance / Exit Search	Searches for the destination by the name of the street that connects to a Motorway entrance / exit.
	Coordinate Search	User can input destination like a oasis in the desert etc.
	Telephone Number Search (except for Australia model)	Searches a facility by its telephone number.
	POI, Brand Icon Indication (except for Australia model)	Displays icons for points of interest.

(Continued)

Item		Function
Route Search	Multiple Destination Setting	Sets multiple destinations. It can also rearrange the sequence of the destinations.
	Route Search	Searches for multiple routes.
	Search Condition Designation	Searches for the recommended, shortest, and other routes.
	Regulated Road Consideration	Performs search while considering regulated roads.
	Avoidance Area	Avoids a designated area and searches a route.
	Route Search Considering Traffic info. (for Europe model)	Searches for a route that detours traffic congestion.
	Motorway Mode Screen (except for Australia model)	Displays information on facilities in the vicinity of the motorway exits and entrances.
	Border Guidance (except for Australia model)	Displays a border mark when crossing a border.
Guidance	Destination Direction Arrow Display	Uses arrows along the road to display the direction of the destination during route guidance.
	Off-Route Arrow Display	Uses arrows to display the direction of the destination during off-route.
	Roundabout Guidance	Guidance that renders the entry and exit into a rotary as a single branching point.
	Right or Left Turn Guidance	Voice guidance to instruct the direction of travel to be taken.
	Motorway Direction of Travel Guidance	Voice guidance to instruct the direction of travel to take on the Motorway.
	Distance DisplayDestination	Displays the distance from the present location to the destination.
	Motorway Branch Type Specimen Guidance (except for Australia model)	Type specimen for guidance to a Motorway branch.
	Intersection Map Display	Intersection map appears approaching an intersection.
	Turn List Display	Displays a turn list on the right side of the two-screen display.
	Calendar	Anniversary or appointment dates can be input and displayed.

4. Bluetooth Hands Free System

General

Bluetooth is a short-distance, high-speed wireless data communication system that uses the 2.4 GHz frequency band prescribed by the Bluetooth SIG (Special Interest Group).
Through the use of the Bluetooth communication protocol, various computer and communication devices can exchange wireless audio or data communication without relying on any cables.

- On the new Land Cruiser, an onboard Bluetooth unit has been integrated in the multi display.
- This enables hands free communication with bluetooth-compatible cellular telephone.

▶ System Diagram ◀

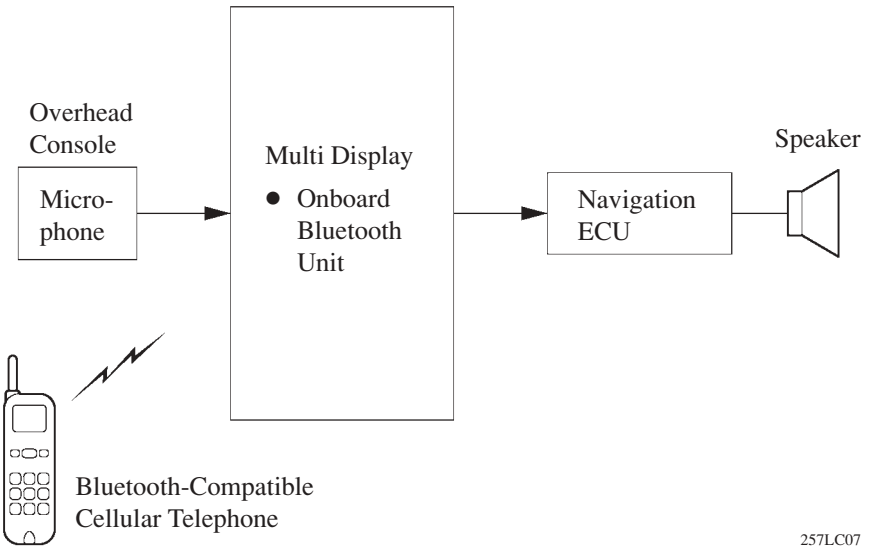

▶ Specification ◀

Item	Specifications
Communication Distance	Approximate 10 meter radius
Number of devices connected simultaneously	1 device (Registration, max 4 phones)
Use frequency range	2.45 GHz (ISM band range)

Layout of Main Components

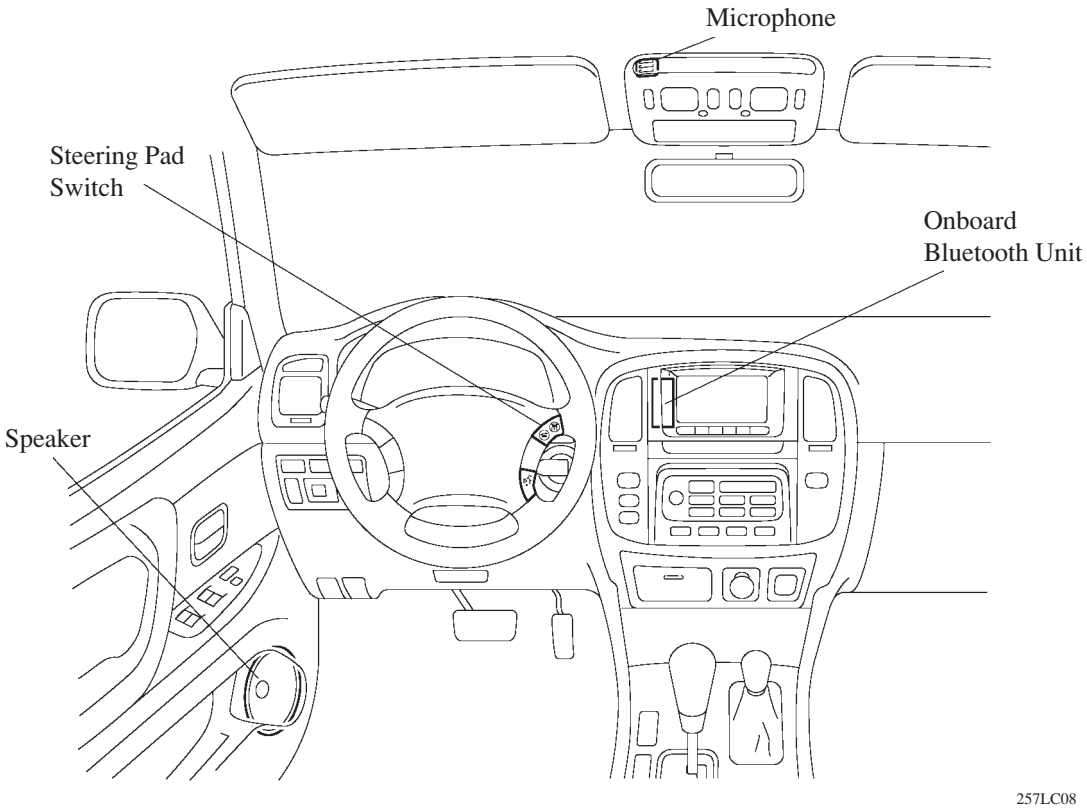

▶ Function of Main Components ◀

Item	Outline
Onboard Bluetooth Unit	The onboard Bluetooth unit consists of an antenna and a module. The module contains an interface to connect the onboard Bluetooth unit to the multi display. Another function of the module is to process the data that is being transmitted or received by the antenna.
Steering Pad Switch	Contains “on-hook” and “off-hook” switches for operating the telephone.
Microphone	These items are used by an occupant in the vehicle to operate the hands-free function while talking with another person on the cellular telephone.
Speaker	

Operation Procedure

- When making a phone call, select a person to call while keeping bluetooth-compatible cellular telephone in a bag or a shirt pocket. The number is transmitted by the multi display or the steering pad switch to converse with another person on the cellular telephone circuit via bluetooth communication.
- Unlike in the past, it is not necessary to connect the cellular telephone with the onboard Bluetooth unit. Also, because Bluetooth communication connects automatically, no complex setups are required to use it each time. However, a Bluetooth-compatible cellular telephone must be registered initially with the onboard device.

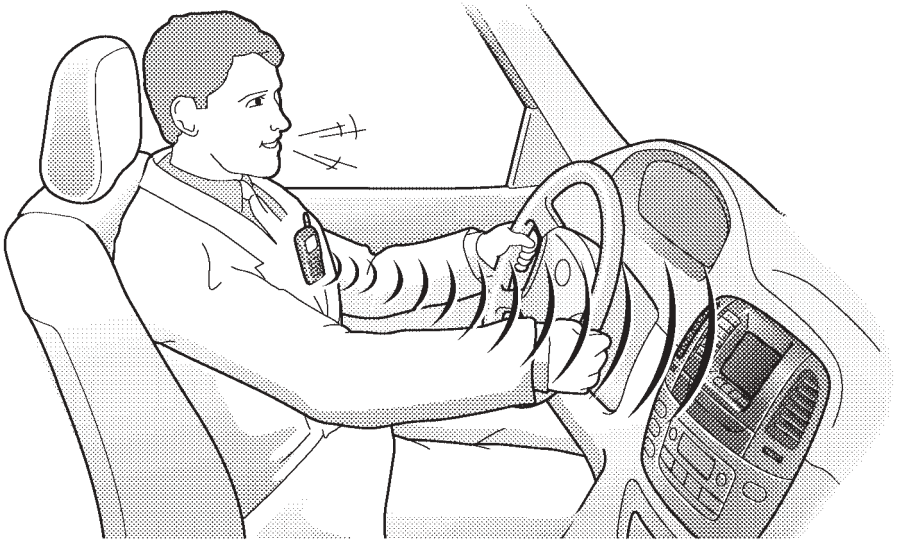

257LC01

Procedures for Registering, Selecting, and Deleting Bluetooth-Compatible Cellular Telephones

1) General

- To use the hands-free function, a Bluetooth-compatible cellular telephone must be registered with the onboard device.
- Once a Bluetooth-compatible cellular telephone has been registered, it connects automatically so that it can be used subsequently for making hands-free telephone calls. A maximum of four Bluetooth-compatible cellular telephones can be registered with an onboard Bluetooth unit.

2) Procedure for Registering Cellular Telephones

- On the “Settings” screen of the multi display, press the “Entry” button.



257LC09

- A screen appears, prompting you to enter the Bluetooth pass key on a cellular telephone. Enter the pass key number, which appears on the screen, on a Bluetooth-compatible cellular telephone.

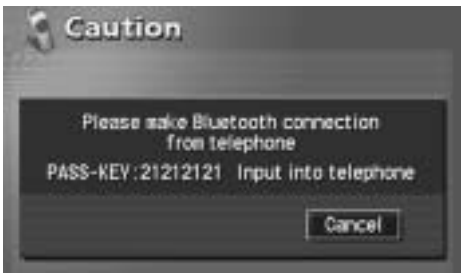

257LC10

- A connection will start once the Bluetooth pass key number has been entered on a Bluetooth-compatible cellular telephone. When a connection is completed normally, the device name of the Bluetooth-compatible cellular telephone and the Bluetooth unit address will appear on the screen. This completes the registration process.



257LC11

5

3) Procedure for Switching Registered Cellular Telephones

- Up to four Bluetooth-compatible cellular telephones can be registered on the onboard Bluetooth unit. However, only one Bluetooth-compatible cellular telephone can connect automatically. To switch between multiple Bluetooth-compatible cellular telephones that have been registered on the onboard unit, select the device name of the Bluetooth-compatible cellular telephone on the "Select Telephone" screen. After completing the foregoing selection, if you wish to change the connection to another Bluetooth-compatible cellular telephone, perform a device selection again.
  (The Bluetooth-compatible cellular telephone that is registered last becomes activated as default device.)

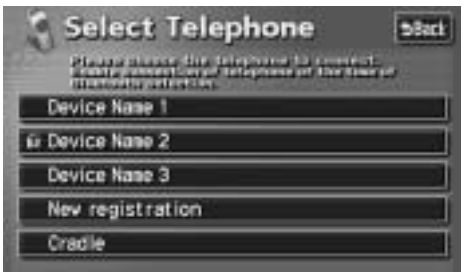

257LC12

4) Procedure for Deleting Registered Cellular Telephones

- Perform the following procedure to delete the registration data of Bluetooth-compatible cellular telephones from the onboard Bluetooth unit.
  On the "Delete Telephone" screen, select the device name that you wish to delete, and press the "OK" button.
  The registered data has been deleted from the registration list.



257LC13

■REAR VIEW MONITOR SYSTEM

1. General

- To assist the driver in parking the vehicle by monitoring the rear view, this system has a television camera mounted on the back door to display the rearview of the vehicle on the multi display.

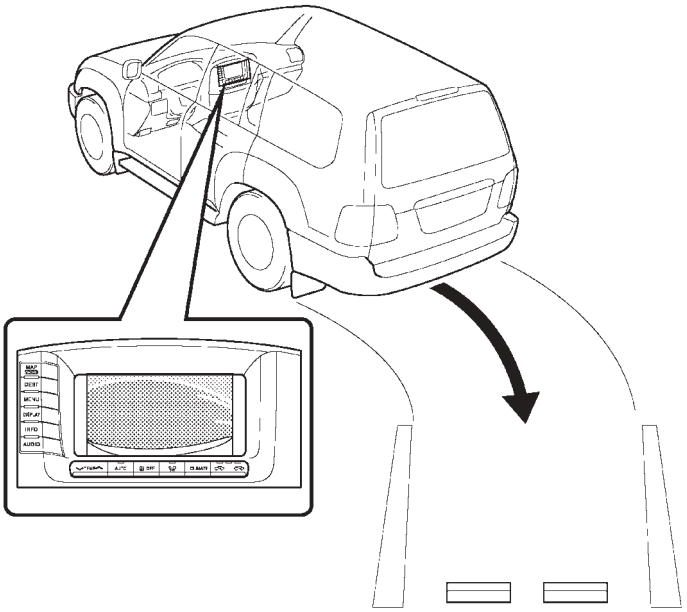

257LC02

▶ System Diagram ◀

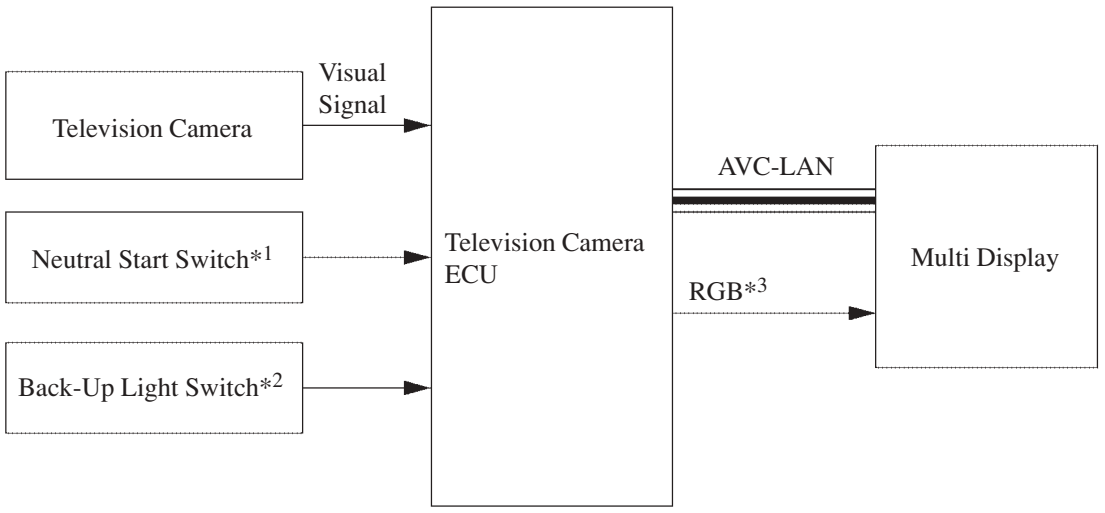

258LC01

*1: For Automatic Transaxle model
*2: For Manual Transaxle model
*3: RGB (Red Green Blue)

2. Layout of Main Components

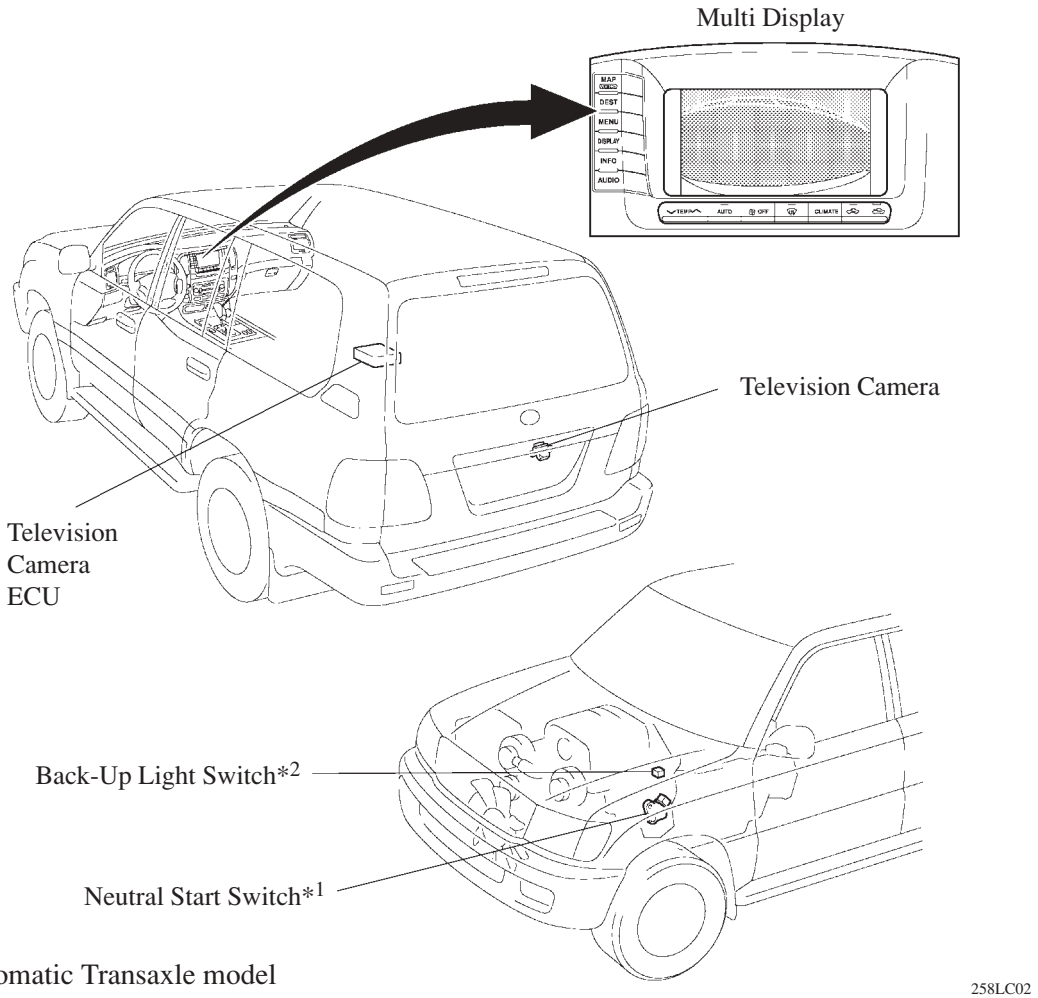

*1: For Automatic Transaxle model
*2: For Manual Transaxle model

▶ Function of Main Components ◀

Item	Function
Television Camera	● Mounted on the back door to transmit the rearview image of the vehicle to the Television Camera ECU. ● A color video camera that uses a CCD (Charge Coupled Device) and a wide-angle lens.
Television Camera ECU	● Transmits video signals, which contain a composite of the rear view of the vehicle taken with the television camera and the warning message, to the multi display. ● Television camera ECU effects control of the system by receiving the signal from the Neutral Start Switch (or Back-Up Light Switch).
Multi Display	Receives video signals containing a composite of the rear view of the vehicle and the warning message from the television camera ECU, and displays on the multi display.
Neutral Start Switch (AT)	Transmits a reverse shift position signal to the Television camera ECU.
Back-Up Light Switch (MT)	

5

3. Operation

1) General

- With the ignition switch ON, if the driver shifts the shift lever to reverse, the display of the multi display switches to operate this system. In this state, if the driver moves the shift lever to a position other than reverse, or switches the modes on the multi display, the rear view display stops and switches to the display of another mode.

CAUTION

- Never depend on the rear view monitor system entirely when backing up. Always make sure your intended path is clear. Use caution, just as you would when backing up any vehicle.
- Never back up while locking only at the screen. The image on the screen is different from actual conditions. Depicted distances between objects and flat surfaces will differ from actual distance. If you back up while looking only at the screen, you may hit a vehicle, a person or an object. When backing up, be sure to check visually behind and all around the vehicle, both directly and with mirrors, before proceeding.

2) Area Displayed on Screen

- On the Multi Display, objects on the right of the vehicle appear on the right side of the display panel, and objects on the left of the vehicle appear on the left side of the display panel.
- The television camera uses a wide-angle lens. The perceived distance from the image that appears on the screen differs from the actual distance.

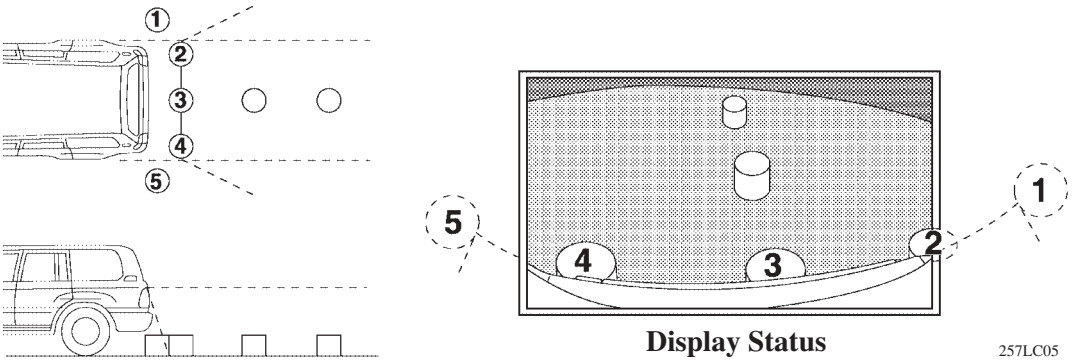

Display Status 257LC05

NOTE: Area displayed on screen may vary according to vehicle status or road conditions.
The area detected by the television camera is limited. The television camera dose not detects objects close to either corner of the bumper or under bumper.

3) Fail Safe

The table below indicates the conditions of detecting malfunctions in this system.

Malfunction Parts	Detection Item	Function
Television Camera	Transmission of television camera malfunction signal	Stops signal reception and displays a dark screen
Television Camera ECU	Malfunction of television camera ECU unit	Stops system operation

4) Self-Diagnosis Function

- The rear view monitor system is equipped with a self-diagnosis system and can display the diagnosis menu.
- The method for starting the diagnosis menu screen is the same as navigation system on the previous Land Cruiser. For details, refer to the Land Cruiser Repair Manual (Pub. No. RM1072E).

4. Handling Precaution

- In the following cases, it may become difficult to see the images on the screen, even when the system is functioning.
  - — In the dark (for example, at night)
  - — When the temperature near the lens is high or low
  - — When water droplets are adhering to the television camera, or when humidity is high. (for example, when it rains)
  - — When foreign matter (for example, snow or mud) is adhering to the television camera
  - — When the sun or the beam of headlights is shining directly into the television camera lens
- If a bright light (for example, sunlight reflected off the vehicle body) is picked up by the television camera, the smear effect*, peculiar to the camera, may occur.

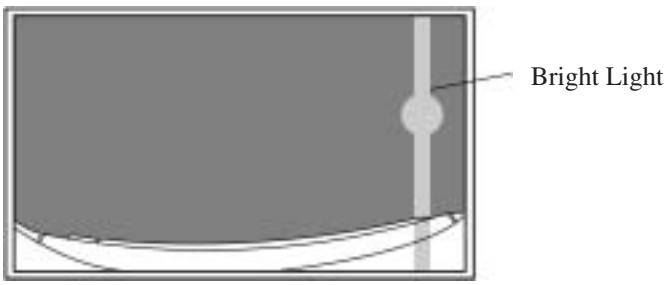

232BE26

Display Status

— REFERENCE —

*: Smear effect
A phenomenon that occurs when a bright light is picked up by the television camera; when transmitted by the television camera, the light source appears to have a vertical streak above and below it.

MAJOR TECHNICAL SPECIFICATIONS

Item \ Area				Europe			
Body Type				Wagon (Lift-Up Back Door)			
Vehicle Grade				VX			
Model Code				UZJ100R-GNAEKW	UZJ100L-GNAEKW	HDJ100R-GNMEZW	HDJ100R-GNAEZW
Major Dimensions & Vehicle Weights	Overall	Length	mm (in.)	4890 (192.5)*1	4890 (192.5)*1	4890 (192.5)*1	4890 (192.5)*1
		Width	mm (in.)	1940 (76.4)	1940 (76.4)	1940 (76.4)	1940 (76.4)
		Height	mm (in.)	1880 (74.0)*2, 1850 (72.8)*2, *3	1880 (74.0)*2, 1850 (72.8)*2, *3	1880 (74.0)*2, 1850 (72.8)*2, *3	1880 (74.0)*2, 1850 (72.8)*2, 3
	Wheel Base		mm (in.)	2850 (112.2)	2850 (112.2)	2850 (112.2)	2850 (112.2)
	Tread	Front	mm (in.)	1620 (63.8)	1620 (63.8)	1620 (63.8)	1620 (63.8)
		Rear	mm (in.)	1615 (63.6)	1615 (63.6)	1615 (63.6)	1615 (63.6)
	Room	Length	mm (in.)	2505 (98.6)*4	2505 (98.6)*4	2505 (98.6)*4	2505 (98.6)*4
		Width	mm (in.)	1620 (63.8)	1620 (63.8)	1620 (63.8)	1620 (63.8)
		Height	mm (in.)	1145 (45.1), 1150 (45.3)*15	1145 (45.1), 1150 (45.3)*15	1145 (45.1), 1150 (45.3)*15	1145 (45.1), 1150 (45.3)*15
	Cargo Space	Length	mm (in.)	335 (13.2)*4	335 (13.2)*4	335 (13.2)*4	335 (13.2)*4
		Width	mm (in.)	—	—	—	—
		Height	mm (in.)	995 (39.2)*4	995 (39.2)*4	995 (39.2)*4	995 (39.2)*4
	Overhang	Front	mm (in.)	895 (35.2)*1	895 (35.2)*1	895 (35.2)*1	895 (35.2)*1
		Rear	mm (in.)	1145 (45.1)	1145 (45.1)	1145 (45.1)	1145 (45.1)
	Min. Running Ground Clearance		mm (in.)	—	—	—	—
	Angle of Approach		degrees	—	—	—	—
	Angle of Departure		degrees	—	—	—	—
	Curb Weight*19	Front	kg (lb)	1190 - 1340 (2623 - 2954)	1190 - 1340 (2623 - 2954)	1350 - 1495 (2976 - 3296)	1355 - 1430 (2987 - 3153)
		Rear	kg (lb)	1080 - 1135 (2381 - 2502)	1080 - 1135 (2381 - 2502)	1095 - 1145 (2414 - 2524)	1105 - 1180 (2436 - 2601)
		Total	kg (lb)	2270 - 2475 (5004 - 5456)	2270 - 2475 (5004 - 5456)	2445 - 2640 (5390 - 5820)	2460 - 2610 (5423 - 5754)
	Gross Vehicle Weight	Front	kg (lb)	—	—	—	—
		Rear	kg (lb)	—	—	—	—
		Total	kg (lb)	3260 (7187)	3260 (7187)	3260 (7187)	3260 (7187)
	Fuel Tank Capacity		ℓ (Imp.gal.)	96 (21.1)	96 (21.1)	96 (21.1)	96 (21.1)
	Luggage Compartment Capacity		m^3 (cu.ft.)	—	—	—	—
Performance	Max. Speed		km / h (mph)	180 (112)	180 (112)	170 (105)	180 (112)
	Max. Cruising Speed		km / h (mph)	—	—	—	—
	Max. Permissible Speed	1st Gear	km / h (mph)	19 (12)*5, 47 (29)*6	19 (12)*5, 47 (29)*6	14 (9)*5, 35 (22)*6	18 (11)*5, 44 (27)*6
		2nd Gear	km / h (mph)	33 (20)*5, 81 (50)*6	33 (20)*5, 81 (50)*6	26 (16)*5, 63 (39)*6	35 (22)*5, 85 (54)*6
		3rd Gear	km / h (mph)	—	—	39 (24)*5, 97 (60)*6	—
		4th Gear	km / h (mph)	—	—	59 (37)*5, 144 (89)*6	—
	Min. Turning Radius	Tire	m (ft.)	5.9 (19.4)	5.9 (19.4)	5.9 (19.4)	5.9 (19.4)
		Body	m (ft.)	6.3 (20.7)	6.3 (20.7)	6.3 (20.7)	6.3 (20.7)
Engine	Engine Type			2UZ-FE	2UZ-FE	1HD-FTE	1HD-FTE
	Valve Mechanism			32-Valve, DOHC	32-Valve, DOHC	24-Valve, OHC	24-Valve, OHC
	Bore x Stroke		mm (in.)	94.0 x 84.0 (3.70 x 3.31)	94.0 x 84.0 (3.70 x 3.31)	94.0 x 100.0 (3.70 x 3.94)	94.0 x 100.0 (3.70 x 3.94)
	Displacement		cm^3 (cu.in.)	4664 (284.5)	4664 (284.5)	4164 (254.0)	4164 (254.0)
	Compression Ratio			9.6 : 1	9.6 : 1	18.5 : 1	18.5 : 1
	Fuel System			EFI	EFI	Distributor Type	Distributor Type
	Research Octane No. or Cetane No. (Diesel)			91 or higher	91 or higher	48 or higher	48 or higher
	Max. Output		kW/rpm	175 / 4800 (EEC)	175 / 4800 (EEC)	150 / 3400 (EEC)	150 / 3400 (EEC)
	Max. Torque		N·m / rpm	434 / 3400 (EEC)	434 / 3400 (EEC)	430 / 1400 - 3200 (EEC)	430 / 1400 - 3200 (EEC)
Engine Electrical	Battery Capacity (5HR)		Voltage & Amp. hr.	12-55, 64*7	12-55, 64*7	12-55 x 2, 64 x 2*7	12-55 x 2, 64 x 2*7
	Alternator Output		Watts	960	960	960, 1440*7	960, 1440*7
	Starter Output		kW	2.0	2.0	3.0	3.0
Chassis	Clutch Type			—	—	Dry, Single Plate Diaphragm	—
	Transmission Type			A750F	A750F	H151F	A750F
	Transmission Gear Ratio	In First		3.520	3.520	4.081	3.520
		In Second		2.042	2.042	2.294	2.042
		In Third		1.400	1.400	1.490	1.400
		In Fourth		1.000	1.000	1.000	1.000
		In Fifth		0.716	0.716	0.881	0.716
		In Reverse		3.224	3.224	4.313	3.224
	Transfer Gear Ratio H4 / L4			1.000 / 2.488	1.000 / 2.488	1.000 / 2.488	1.000 / 2.488
	Differential Gear Ratio (Front / Rear)			4.100 / 4.100	4.100 / 4.300	3.909 / 3.909	4.100 / 4.100
	Differential Gear Size (Front / Rear)		in.	8" / 9.5"	8" / 9.5"	8" / 9.5"	8" / 9.5"
	Brake Type	Front		Ventilated Disc	Ventilated Disc	Ventilated Disc	Ventilated Disc
		Rear		Ventilated Disc	Ventilated Disc	Ventilated Disc	Ventilated Disc
	Parking Brake Type			Drum	Drum	Drum	Drum
	Brake Booster Type and Size		in.	Hydraulic	Hydraulic	Hydraulic	Hydraulic
	Proportioning Valve Type			P & B Valve, -*16	P & B Valve, -*16	P & B Valve	P & B Valve
	Suspension Type	Front		Double Wishbone	Double Wishbone	Double Wishbone	Double Wishbone
		Rear		4-Link with Lateral Rod	4-Link with Lateral Rod	4-Link with Lateral Rod	4-Link with Lateral Rod
	Stabilizer Bar	Front		Standard	Standard	Standard	Standard
		Rear		Standard	Standard	Standard	Standard
	Steering Gear Type			Rack & Pinion	Rack & Pinion	Rack & Pinion	Rack & Pinion
	Steering Gear Ratio (Overall)			17.3, 12.4 - 18.0*18	17.3, 12.4 - 18.0*18	17.3	17.3
	Power Steering Type			Integral Type	Integral Type	Integral Type	Integral Type

*: Unladed Vehicle
*1: With Electrical Winch +50 mm (2.0 in.)
*2: With Roof Rail +40 mm (1.6 in.)
*3: With AHC
*4: With 3rd Seat
*5: Transfer in Low
*6: Transfer in High
*7: Option
*8: With 275 / 70R16 Tire
*9: With ABS
*10: With Back Door-Mounted Spare Tire, Tire Size 235 / 85R16 +295 mm (11.6 in.), Tire Size 275 / 70R16 +305 (12.0 in.), Tire Size 7.50R16 +265 mm (10.4 in.)
*11: With Roof Rack +230 mm (9.1 in.)
*12: With Grille Guard +75 mm (3.0 in.)
*13: With 7.50R16 Tire

Europe			Australia		
Wagon (Lift-Up Back Door)		Wagon (Swing Back Door)	Wagon (Lift-Up Back Door)		
VX		STD	GX		VX
HDJ100L-GNMEZW	HDJ100L-GNAEZW	HDJ100L-GCMRZW	UZJ100R-GNMNKQ	UZJ100R-GNANKQ	UZJ100R-GNAEKQ
4890 (192.5)*1	4890 (192.5)*1	4890 (192.5)*1	4890 (192.5)*1	4890 (192.5)*1	4890 (192.5)*1
1940 (76.4)	1940 (76.4)	1940 (76.4)	1940 (76.4)	1940 (76.4)	1940 (76.4)
1880 (74.0)*2, 1850 (72.8)*2, *3	1880 (74.0)*2, 1850 (72.8)*2, *3	1880 (74.0)*2, 1850 (72.8)*2, *3	1890 (74.4)	1890 (74.4)	1890 (74.4)
2850 (112.2)	2850 (112.2)	2850 (112.2)	2850 (112.2)	2850 (112.2)	2850 (112.2)
1620 (63.8)	1620 (63.8)	1620 (63.8)	1620 (63.8), 1640 (64.6)*17	1620 (63.8), 1640 (64.6)*17	1620 (63.8), 1640 (64.6)*17
1615 (63.6)	1615 (63.6)	1615 (63.6)	1615 (63.6), 1635 (64.4)*17	1615 (63.6), 1635 (64.4)*17	1615 (63.6), 1635 (64.4)*17
2505 (98.6)*4	2505 (98.6)*4	2505 (98.6)*4	1805 (71.1)	1805 (71.1)	2505 (98.6)
1620 (63.8)	1620 (63.8)	1620 (63.8)	1615 (63.6)	1615 (63.6)	1620 (63.8)
1145 (45.1), 1150 (45.3)*15	1145 (45.1), 1150 (45.3)*15	1145 (45.1), 1150 (45.3)*15	1180 (46.5), 1150 (45.3)*15	1180 (46.5), 1150 (45.3)*15	1145 (45.1), 1150 (45.3)*15
335 (13.2)*4	335 (13.2)*4	335 (13.2)*4	1085 (42.7)	1085 (42.7)	335 (13.2)
—	—	—	—	—	—
995 (39.2)*4	995 (39.2)*4	995 (39.2)*4	1665 (41.9)	1665 (41.9)	995 (39.2)
895 (35.2)*1	895 (35.2)*1	895 (35.2)*1	895 (35.2)	895 (35.2)	895 (35.2)
1145 (45.1)	1145 (45.1)	1145 (45.1)	1145 (45.1)	1145 (45.1)	1145 (45.1)
—	—	—	—	—	—
—	—	—	—	—	—
—	—	—	—	—	—
1350 - 1495 (2976 - 3296)	1355 - 1430 (2987 - 3153)	1375 - 1405 (3031 - 3097)	1245 - 1265 (2745 - 2789)	1260 - 1280 (2778 - 2822)	1290 - 1305 (2844 - 2877)*20
1095 - 1145 (2414 - 2524)	1105 - 1180 (2436 - 2601)	1060 - 1100 (2337 - 2425)	1060 - 1080 (2337 - 2381)	1065 - 1085 (2348 - 2392)	1190 - 1215 (2623 - 2679)*20
2445 - 2640 (5390 - 5820)	2460 - 2610 (5423 - 5754)	2435 - 2505 (5368 - 5523)	2305 - 2345 (5082 - 5170)	2325 - 2365 (5126 - 5214)	2480 - 2520 (5467 - 5556)*20
—	—	—	—	—	—
—	—	—	—	—	—
3260 (7187)	3260 (7187)	3260 (7187)	3260 (7187)	3260 (7187)	3260 (7187)
96 (21.1)	96 (21.1)	96 (21.1)	95 + 50 (20.9 + 11.0)	95 + 50 (20.9 + 11.0)	95 + 50 (20.9 + 11.0)
—	—	—	—	—	—
170 (105)	180 (112)	170 (105)	180 (112)	180 (112)	180 (112)
—	—	—	—		
14 (9)*5, 35 (22)*6	18 (11)*5, 44 (28)*6	14 (9)*5, 35 (22)*6	17 (11)*5, 40 (25)*6	19 (12)*5, 47 (29)*6	19 (12)*5, 47 (29)*6
26 (16)*5, 63 (39)*6	35 (22)*5, 85 (53)*6	26 (16)*5, 63 (39)*6	29 (18)*5, 72 (45)*6	33 (20)*5, 81 (50)*6	33 (20)*5, 81 (50)*6
39 (24)*5, 97 (60)*6	—	39 (24)*5, 97 (60)*6	45 (28)*5, 111 (69)*6	—	—
59 (37)*5, 144 (89)*6	—	59 (37)*5, 144 (89)*6	67 (42)*5, 165 (102)*6	—	—
5.9 (19.4)	5.9 (19.4)	5.9 (19.4)	5.9 (19.4)	5.9 (19.4)	5.9 (19.4)
6.3 (20.7)	6.3 (20.7)	6.3 (20.7)	6.3 (20.7)	6.3 (20.7)	6.3 (20.7)
1HD-FTE	1HD-FTE	1HD-FTE	2UZ-FE	2UZ-FE	2UZ-FE
24-Valve, OHC	24-Valve, OHC	24-Valve, OHC	32-Valve, DOHC	32-Valve, DOHC	32-Valve, DOHC
94.0 x 100.0 (3.70 x 3.94)	94.0 x 100.0 (3.70 x 3.94)	94.0 x 100.0 (3.70 x 3.94)	94.0 x 84.0 (3.70 x 3.31)	94.0 x 84.0 (3.70 x 3.31)	94.0 x 84.0 (3.70 x 3.31)
4164 (254.0)	4164 (254.0)	4164 (254.0)	4664 (284.5)	4664 (284.5)	4664 (284.5)
18.5 : 1	18.5 : 1	18.8 : 1	9.6 : 1	9.6 : 1	9.6 : 1
Distributor Type	Distributor Type	Distributor Type	EFI	EFI	EFI
48 or higher	48 or higher	48 or higher	91 or higher	91 or higher	91 or higher
150 / 3400 (EEC)	150 / 3400 (EEC)	150 / 3400 (EEC)	170 / 4800 (SAE-NET)	170 / 4800 (SAE-NET)	170 / 4800 (SAE-NET)
430 / 1400 - 3200 (EEC)	430 / 1400 - 3200 (EEC)	430 / 1400 - 3200 (EEC)	410 / 3400 (SAE-NET)	410 / 3400 (SAE-NET)	410 / 3400 (SAE-NET)
12-55 x 2, 64 x 2*7	12-55 x 2, 64 x 2*7	12-64 x 2	12-55	12-55	12-55
960, 1440*7	960, 1440*7	1440	1200	1200	1200
3.0	3.0	3.0	1.4	1.4	1.4
Dry, Single Plate Diaphragm	—	Dry, Single Plate Diaphragm	Dry, Single Plate Diaphragm	—	—
H151F	A750F	H151F	H151F	A750F	A750F
4.081	3.520	4.081	4.081	3.520	3.520
2.294	2.042	2.294	2.294	2.042	2.042
1.490	1.400	1.490	1.490	1.400	1.400
1.000	1.000	1.000	1.000	1.000	1.000
0.881	0.716	0.881	0.881	0.716	0.716
4.313	3.224	4.313	4.313	3.224	3.224
1.000 / 2.488	1.000 / 2.488	1.000 / 2.488	1.000 / 2.488	1.000 / 2.488	1.000 / 2.488
3.909 / 3.909	4.100 / 4.100	3.909 / 3.909	4.300 / 4.300	4.100 / 4.100	4.100 / 4.100
8” / 9.5”	8” / 9.5”	8” / 9.5”	8” / 9.5”	8” / 9.5”	8” / 9.5”
Ventilated Disc	Ventilated Disc	Ventilated Disc	Ventilated Disc	Ventilated Disc	Ventilated Disc
Ventilated Disc	Ventilated Disc	Ventilated Disc	Ventilated Disc	Ventilated Disc	Ventilated Disc
Drum	Drum	Drum	Drum	Drum	Drum
Hydraulic	Hydraulic	Hydraulic	Hydraulic	Hydraulic	Hydraulic
P & B Valve	P & B Valve	P & B Valve	P & B Valve	P & B Valve	P & B Valve
Double Wishbone	Double Wishbone	Double Wishbone	Double Wishbone	Double Wishbone	Double Wishbone
4-Link with Lateral Rod	4-Link with Lateral Rod	4-Link with Lateral Rod	4-Link with Lateral Rod	4-Link with Lateral Rod	4-Link with Lateral Rod
Standard	Standard	Standard	Standard	Standard	Standard
Standard	Standard	Standard	Standard	Standard	Standard
Rack & Pinion	Rack & Pinion	Rack & Pinion	Rack & Pinion	Rack & Pinion	Rack & Pinion
17.3	17.3	17.3	17.3	17.3	17.3
Integral Type	Integral Type	Integral Type	Integral Type	Integral Type	Integral Type

*14: With AHC -50 mm (2.0 in.)
*15: With Moon Roof
*16: With VSC
*17: With 235 / 85R16 Tire
*18: With VGRS
*19: Separate Seat, Seating Capacity : 5
*20: Seating Capacity : 8

Item \ Area				Australia			
Body Type				Wagon (Swing Back Door)	Wagon (Lift-Up Back Door)		
Vehicle Grade				STD	GX		
Model Code				HZJ105R-GCMRSQ	HZJ105R-GNMNSQ	HDJ100R-GNMNZQ	HDJ100R-GNANZQ
Major Dimensions & Vehicle Weights	Overall	Length	mm (in.)	4890 (192.5)	4890 (192.5)	4890 (192.5)	4890 (192.5)
		Width	mm (in.)	1940 (76.4)	1940 (76.4)	1940 (76.4)	1940 (76.4)
		Height	mm (in.)	1920 (75.6), 1915 (75.4)*8	1920 (75.6), 1915 (75.4)*8	1890 (74.4)	1890 (74.4)
	Wheel Base		mm (in.)	2850 (112.2)	2850 (112.2)	2850 (112.2)	2850 (112.2)
	Tread	Front	mm (in.)	1605 (63.2)	1605 (63.2)	1620 (63.8), 1640 (64.6)*17	1620 (63.8), 1640 (64.6)*17
		Rear	mm (in.)	1600 (63.0)	1600 (63.0)	1615 (63.6), 1635 (64.4)*17	1615 (63.6), 1635 (64.4)*17
	Room	Length	mm (in.)	1805 (71.1)	1805 (71.1)	1805 (71.1)	1805 (71.1)
		Width	mm (in.)	1615 (63.6)	1615 (63.6)	1615 (63.6)	1615 (63.6)
		Height	mm (in.)	1180 (46.5)	1180 (46.5), 1150 (45.3)*15	1180 (46.5), 1150 (45.3)*15	1180 (46.5), 1150 (45.3)*15
	Cargo Space	Length	mm (in.)	1085 (42.7)	1085 (42.7)	1085 (42.7)	1085 (42.7)
		Width	mm (in.)	—	—	—	—
		Height	mm (in.)	1065 (41.9)	1065 (41.9)	1065 (41.9)	1065 (41.9)
	Overhang	Front	mm (in.)	895 (35.2)	895 (35.2)	895 (35.2)	895 (35.2)
		Rear	mm (in.)	1145 (45.1)	1145 (45.1)	1145 (45.1)	1145 (45.1)
	Min. Running Ground Clearance		mm (in.)	—	—	—	—
	Angle of Approach		degrees	—	—	—	—
	Angle of Departure		degrees	—	—	—	—
	Curb Weight*19	Front	kg (lb)	1195 - 1230 (2634 - 2712)	1205 - 1230 (2657 - 2712)	1330 - 1350 (2932 - 2976)	1355 - 1375 (2987 - 3031)
		Rear	kg (lb)	1130 - 1155 (2491 - 2546)	1120 - 1140 (2469 - 2513)	1150 - 1170 (2535 - 2579)	1155 - 1175 (2546 - 2590)
		Total	kg (lb)	2325 - 2385 (5126 - 5258)	2325 - 2370 (5126 - 5225)	2480 - 2520 (5467 - 5556)	2510 - 2550 (5534 - 5622)
	Gross Vehicle Weight	Front	kg (lb)	—	—	—	—
		Rear	kg (lb)	—	—	—	—
		Total	kg (lb)	3180 (7011)	3180 (7011)	3260 (7187)	3260 (7187)
	Fuel Tank Capacity		ℓ (Imp.gal.)	95 + 50 (20.9 + 11.0)	95 + 50 (20.9 + 11.0)	96 + 45 (21.1 + 9.9)	96 + 45 (21.1 + 9.9)
	Luggage Compartment Capacity		m^3 (cu.ft.)	—	—	—	—
Performance	Max. Speed		km / h (mph)	155 (96)	155 (96)	175 (109)	180 (112)
	Max. Cruising Speed		km / h (mph)	—	—	—	—
	Max. Permissible Speed	1st Gear	km / h (mph)	13 (8)*5, 32 (20)*6	13 (8)*5, 32 (20)*6	14 (9)*5, 35 (22)*6	16 (10)*5, 39 (24)*6
		2nd Gear	km / h (mph)	25 (16)*5, 60 (37)*6	25 (16)*5, 60 (37)*6	26 (16)*5, 63 (39)*6	27 (17)*5, 67 (42)*6
		3rd Gear	km / h (mph)	40 (25)*5, 97 (60)*6	40 (25)*5, 97 (60)*6	39 (24)*5, 97 (60)*6	—
		4th Gear	km / h (mph)	57 (35)*5, 140 (87)*6	57 (35)*5, 140 (87)*6	59 (37)*5, 144 (89)*6	—
	Min. Turning Radius	Tire	m (ft.)	6.0 (19.7)	6.0 (19.7)	6.0 (19.7)	6.0 (19.7)
		Body	m (ft.)	6.4 (21.0)	6.4 (21.0)	6.4 (21.0)	6.4 (21.0)
Engine	Engine Type			1HZ	1HZ	1HD-FTE	1HD-FTE
	Valve Mechanism			12-Valve, OHC	12-Valve, OHC	24-Valve, OHC	24-Valve, OHC
	Bore x Stroke		mm (in.)	94.0 x 100.0 (3.70 x 3.94)	94.0 x 100.0 (3.70 x 3.94)	94.0 x 100.0 (3.70 x 3.94)	94.0 x 100.0 (3.70 x 3.94)
	Displacement		cm^3 (cu.in.)	4164 (254.0)	4164 (254.0)	4164 (254.0)	4164 (254.0)
	Compression Ratio			22.4 : 1	22.4 : 1	18.8 : 1	18.8 : 1
	Fuel System			Distributor Type	Distributor Type	Distributor Type	Distributor Type
	Research Octane No. or Cetane No. (Diesel)			48 or higher	48 or higher	48 or higher	48 or higher
	Max. Output		kW / rpm	96 / 3800 (SAE-NET)	96 / 3800 (SAE-NET)	150 / 3400 (EEC)	150 / 3400 (EEC)
	Max. Torque		N·m / rpm	285 / 2200 (SAE-NET)	285 / 2200 (SAE-NET)	430 / 1400 - 3200 (EEC)	430 / 1400 - 3200 (EEC)
Engine Electrical	Battery Capacity (5HR)		Voltage & Amp. hr.	12-64	12-64	12-55 x 2	12-55 x 2
	Alternator Output		Watts	960, 1440*7	960, 1440*7	1440	1440
	Starter Output		kW	2.5	2.5	3.0	3.0
Chassis	Clutch Type			Dry, Single Plate Diaphragm	Dry, Single Plate Diaphragm	Dry, Single Plate Diaphragm	—
	Transmission Type			R151F	R151F	H151F	A750F
	Transmission Gear Ratio	In First		4.313	4.313	4.081	3.520
		In Second		2.330	2.330	2.294	2.042
		In Third		1.436	1.436	1.490	1.400
		In Fourth		1.000	1.000	1.000	1.000
		In Fifth		0.838	0.838	0.881	0.716
		In Reverse		4.220	4.220	4.313	3.224
	Transfer Gear Ratio H4 / L4			1.000 / 2.488	1.000 / 2.488	1.000 / 2.488	1.000 / 2.488
	Differential Gear Ratio (Front / Rear)			4.300 / 4.300	4.300 / 4.300	4.100 / 4.100	3.909 / 3.909
	Differential Gear Size (Front / Rear)		in.	8" / 9.5"	8" / 9.5"	8" / 9.5"	8" / 9.5"
	Brake Type	Front		Ventilated Disc	Ventilated Disc	Ventilated Disc	Ventilated Disc
		Rear		L. T Drum, Ventilated Disc*7	Ventilated Disc	Ventilated Disc	Ventilated Disc
	Parking Brake Type			Drum	Drum	Drum	Drum
	Brake Booster Type and Size		in.	Vacuum	Vacuum, Hydraulic*9	Hydraulic	Hydraulic
	Proportioning Valve Type			LSP &BV	LSP & BV, P & B Valve*9	P & B Valve	P & B Valve
	Suspension Type	Front		Leading Arm, Coil	Leading Arm, Coil	Double Wishbone	Double Wishbone
		Rear		4-Link with Lateral Rod	4-Link with Lateral Rod	4-Link with Lateral Rod	4-Link with Lateral Rod
	Stabilizer Bar	Front		Standard	Standard	Standard	Standard
		Rear		Standard	Standard	Standard	Standard
	Steering Gear Type			Rack & Pinion	Recerculating Ball	Rack & Pinion	Rack & Pinion
	Steering Gear Ratio (Overall)			17.3	18.59	17.3	17.3
	Power Steering Type			Integral Type	Integral Type	Integral Type	Integral Type

*: Unladed Vehicle
*1: With Electrical Winch +50 mm (2.0 in.)
*2: With Roof Rail +40 mm (1.6 in.)
*3: With AHC
*4: With 3rd Seat
*5: Transfer in Low
*6: Transfer in High
*7: Option
*8: With 275 / 70R16 Tire
*9: With ABS
*10: With Back Door-Mounted Spare Tire, Tire Size 235 / 85R16 +295 mm (11.6 in.), Tire Size 275 / 70R16 +305 (12.0 in.), Tire Size 7.50R16 +265 mm (10.4 in.)
*11: With Roof Rack +230 mm (9.1 in.)
*12: With Grille Guard +75 mm (3.0 in.)
*13: With 7.50R16 Tire

Australia	G.C.C. Countries				
Wagon (Lift-Up Back Door)	Wagon (Swing Back Door)			Wagon (Lift-Up Back Door)	Wagon (Swing Back Door)
VX	GX	STD		GX	
HDJ100R-GNAEZQ	HZJ105L-GCMNSV	FZJ100L-GCMRKV	FZJ100L-GCMNKV	FZJ100L-GNMNKV	FZJ100L-GCPNKV
4890 (192.5)	4890 (192.5)*1, 10	4890 (192.5)*1, 10	4890 (192.5)*1, 10	4890 (192.5)*1, 10	4890 (192.5)*1, 10
1940 (76.4)	1940 (76.4)	1940 (76.4)	1940 (76.4)	1940 (76.4)	1940 (76.4)
890 (74.4)	1905 (75.0)*11, 1885 (74.2)*8, *11	1880 (74.0)*11	1880 (74.0)*11, 1860 (73.2)*8, *11	1880 (74.0)*11, 1860 (73.2)*8, *11	1880 (74.0)*11, 1860 (73.2)*8, *11
2850 (112.2)	2850 (112.2)	2850 (112.2)	2850 (112.2)	2850 (112.2)	2850 (112.2)
1620 (63.8), 1640 (64.6)*17	1605 (63.2)	1640 (64.6)	1640 (64.6), 1620 (63.8)*8	1640 (64.6), 1620 (63.8)*8	1640 (64.6), 1620 (63.8)*8
1615 (63.6), 1635 (64.4)*17	1600 (63.0)	1635 (64.4)	1635 (64.4), 1615 (63.6)*8	1635 (64.4), 1615 (63.6)*8	1635 (64.4), 1615 (63.6)*8
2505 (98.6)	—	1805 (71.1)	—	1805 (71.1)	—
1620 (63.8)	1615 (63.6)	1615 (63.6)	1615 (63.6)	1615 (63.6)	1615 (63.6)
1145 (45.1), 1150 (45.3)*15	1180 (46.5), 1150 (45.3)*15	1180 (46.5)	1180 (46.5), 1150 (45.3)	1180 (46.5), 1150 (45.3)	1180 (46.5), 1150 (45.3)
335 (13.2)	—	1085 (42.7)	—	1085 (42.7)	—
—	—	—	—	—	—
995 (39.2)	—	1065 (41.9)	—	1065 (41.9)	—
895 (35.2)	895 (35.2)*1	895 (35.2)*1	895 (35.2)*1	895 (35.2)*1	895 (35.2)*1
1145 (45.1)	1145 (45.1)*10	1145 (45.1)*10	1145 (45.1)*10	1145 (45.1)*10	1145 (45.1)*10
—	—	—	—	—	—
—	—	—	—	—	—
—	—	—	—	—	—
1405 - 1415 (3097 - 3120)*20	1215 - 1310 (2679 - 2888)	1175 - 1255 (2590 - 2767)	1195 - 1295 (2635 - 2855)	1185 - 1290 (2612 - 2844)	1225 - 1325 (2701 - 2921)
1240 - 1265 (2734 - 2789)*20	1095 - 1275 (2414 - 2811)	1110 - 1225 (2447 - 2701)	1095 - 1290 (2414 - 2844)	1120 - 1280 (2469 - 2822)	1100 - 1295 (2425 - 2855)
2645 - 2680 (5831 - 5908)*20	2310 - 2585 (5093 - 5699)	2285 - 2480 (5038 - 5467)	2290 - 2585 (5049 - 5699)	2305 - 2570 (5082 - 5666)	2325 - 2620 (5126 - 5776)
—	—	—	—	—	—
—	—	—	—	—	—
3260 (7187)	3160 (6967)	3160 (6967)	3160 (6967)	3160 (6967)	3160 (6967)
96 + 45 (21.1 + 9.9)	95 + 50 (20.9 + 11.0)	96 + 45 (21.1 + 9.9)	96 + 45 (21.1 + 9.9)	96 + 45 (21.1 + 9.9)	96 + 45 (21.1 + 9.9)
—	—	—	—	—	—
180 (112)	155 (96)	180 (112)	180 (112)	180 (112)	180 (112)
—	—	—	—	—	—
16 (10)*5, 39 (24)*6	13 (8)*5, 32 (20)*6	16 (10)*5, 39 (24)*6	16 (10)*5, 39 (24)*6	16 (10)*5, 39 (24)*6	21 (13)*5, 51 (31)*6
27 (17)*5, 67 (42)*6	25 (16)*5, 60 (37)*6	28 (17)*5, 70 (43)*6	28 (17)*5, 70 (43)*6	28 (17)*5, 70 (43)*6	40 (25)*5, 97 (60)*6
—	40 (25)*5, 97 (60)*6	44 (27)*5, 107 (66)*6	44 (27)*5, 107 (66)*6	44 (27)*5, 107 (66)*6	—
—	57 (35)*5, 140 (87)*6	65 (40)*5, 160 (99)*6	65 (40)*5, 160 (99)*6	65 (40)*5, 160 (99)*6	—
6.0 (19.7)	6.0 (19.7)	5.9 (19.4)	5.9 (19.4)	5.9 (19.4)	5.9 (19.4)
6.4 (21.0)	6.4 (21.0)	6.3 (20.7)	6.3 (20.7)	6.3 (20.7)	6.3 (20.7)
1HD-FTE	1HZ	1FZ-FE	1FZ-FE	1FZ-FE	1FZ-FE
24-Valve, OHC	12-Valve, OHC	24-Valve, DOHC	24-Valve, DOHC	24-Valve, DOHC	24-Valve, DOHC
94.0 x 100.0 (3.70 x 3.94)	94.0 x 100.0 (3.70 x 3.94)	100.0 x 95.0 (3.97 x 3.74)	100.0 x 95.0 (3.97 x 3.74)	100.0 x 95.0 (3.97 x 3.74)	100.0 x 95.0 (3.97 x 3.74)
4164 (254.0)	4164 (254.0)	4477 (573.1)	4477 (573.1)	4477 (573.1)	4477 (573.1)
18.8 : 1	22.4 : 1	9.0 : 1	9.0 : 1	9.0 : 1	9.0 : 1
Distributor Type	Distributor Type	EFI	EFI	EFI	EFI
48 or higher	48 or higher	91 or higher	91 or higher	91 or higher	91 or higher
150 / 3400 (EEC)	96 / 3800 (SAE-NET)	161 / 4600 (SAE-NET)	161 / 4600 (SAE-NET)	161 / 4600 (SAE-NET)	155 / 4600 (SAE-NET)
430 / 1400 - 3200 (EEC)	285 / 2200 (SAE-NET)	116 / 3600 (SAE-NET)	116 / 3600 (SAE-NET)	116 / 3600 (SAE-NET)	113 / 3600 (SAE-NET)
12-55 x 2	12-55, 12-64 x 2*7	12-55	12-55	12-55	12-55
1440	840, 960*7	960	960, 1200*7	960, 1200*7	960, 1200*7
3.0	2.5, 3.0*7	1.4	1.4	1.4, 2.0*7	1.4
—	Dry, Single Plate Diaphragm	Dry, Single Plate Diaphragm	Dry, Single Plate Diaphragm	Dry, Single Plate Diaphragm	—
A750F	R151F	H151F	H151F	H151F	A442F
3.520	4.313	4.081	4.081	4.081	2.950
2.042	2.330	2.294	2.294	2.294	1.530
1.400	1.436	1.490	1.490	1.490	1.000
1.000	1.000	1.000	1.000	1.000	0.765
0.716	0.838	0.881	0.881	0.881	—
3.224	4.220	4.313	4.313	4.313	2.678
1.000 / 2.488	1.000 / 2.488	1.000 / 2.488	1.000 / 2.488	1.000 / 2.488	1.000 / 2.488
3.909 / 3.909	4.300 / 4.300	4.300 / 4.300	4.300 / 4.300	4.300 / 4.300	4.300 / 4.300
8” / 9.5”	8” / 9.5”	8” / 9.5”	8” / 9.5”	8” / 9.5”	8” / 9.5”
Ventilated Disc	Ventilated Disc	Ventilated Disc	Ventilated Disc	Ventilated Disc	Ventilated Disc
Ventilated Disc	L. T Drum, Ventilated Disc*9	L. T Drum, Ventilated Disc*9	L. T Drum, Ventilated Disc*9	L. T Drum, Ventilated Disc*9	L. T Drum, Ventilated Disc*9
Drum	Drum	Drum	Drum	Drum	Drum
Hydraulic	Vacuum, Hydraulic*9	Vacuum, Hydraulic*9	Vacuum, Hydraulic*9	Vacuum, Hydraulic*9	Vacuum, Hydraulic*9
P & B Valve	LSP & BV, P & B Valve*9	LSP & BV, P & B Valve*9	LSP & BV, P & B Valve*9	LSP & BV, P & B Valve*9	LSP & BV, P & B Valve*9
Double Wishbone	Leading Arm, Coil	Double Wishbone	Double Wishbone	Double Wishbone	Double Wishbone
4-Link with Lateral Rod	4-Link with Lateral Rod	4-Link with Lateral Rod	4-Link with Lateral Rod	4-Link with Lateral Rod	4-Link with Lateral Rod
Standard	Standard	Standard	Standard	Standard	Standard
Standard	Standard	Standard	Standard	Standard	Standard
Rack & Pinion	Recerculating Ball	Rack & Pinion	Rack & Pinion	Rack & Pinion	Rack & Pinion
17.3	18.59	17.3	17.3	17.3	17.3
Integral Type	Integral Type	Integral Type	Integral Type	Integral Type	Integral Type

*14: With AHC -50 mm (2.0 in.)
*15: With Moon Roof
*16: With VSC
*19: Separate Seat, Seating Capacity : 5
*20: Seating Capacity : 8

Item \ Area				G.C.C. Countries			
Body Type				Wagon (Lift-Up Back Door)	Wagon (Swing Back Door)	Wagon (Lift-Up Back Door)	Wagon (Swing Back Door)
Vehicle Grade				GX	VX		
Model Code				FZJ100L-GNPNKV	UZJ100L-GCMEKV	UZJ100L-GNMEKV	UZJ100L-GCAEKV
Major Dimensions & Vehicle Weights	Overall	Length	mm (in.)	4890 (192.5)*1, *10	4890 (192.5)*1, *10, *12	4890 (192.5)*1, *10, *12	4890 (192.5)*1, *10, *12
		Width	mm (in.)	1940 (76.4)	1940 (76.4)	1940 (76.4)	1940 (76.4)
		Height	mm (in.)	1880 (74.0)*11, 1860 (73.2)*8, *11	1860 (73.2)*11, 1850 (72.8)*3, *11	1860 (73.2)*11, 1850 (72.8)*3, *11	1860 (73.2)*11, 1850 (72.8)*3, *11
	Wheel Base		mm (in.)	2850 (112.2)	2850 (112.2)	2850 (112.2)	2850 (112.2)
	Tread	Front	mm (in.)	1640 (64.6), 1620 (63.8)*8	1620 (63.8)	1620 (63.8)	1620 (63.8)
		Rear	mm (in.)	1635 (64.4), 1615 (63.6)*8	1615 (63.6)	1615 (63.6)	1615 (63.6)
	Room	Length	mm (in.)	1805 (71.1)	—	2505 (98.6)	—
		Width	mm (in.)	1615 (63.6)	1620 (63.8)	1620 (63.8)	1620 (63.8)
		Height	mm (in.)	1180 (46.5), 1150 (45.3)	1145 (45.1), 1150 (45.3)*15	1145 (45.1), 1150 (45.3)*15	1145 (45.1), 1150 (45.3)*15
	Cargo Space	Length	mm (in.)	1085 (42.7)	—	335 (13.2)	—
		Width	mm (in.)	—	—	—	—
		Height	mm (in.)	1065 (41.9)	—	995 (39.2)	—
	Overhang	Front	mm (in.)	895 (35.2)*1	895 (35.2)*1, *12	895 (35.2)*1, *12	895 (35.2)*1, *12
		Rear	mm (in.)	1145 (45.1)*10	1145 (45.1)*10	1145 (45.1)*10	1145 (45.1)*10
	Min. Running Ground Clearance		mm (in.)	—	—	—	—
	Angle of Approach		degrees	—	—	—	—
	Angle of Departure		degrees	—	—	—	—
	Curb Weight*19	Front	kg (lb)	1215 - 1320 (2679 - 2910)	1230 - 1345 (2712 - 2965)	1240 - 1345 (2734 - 2965)	1240 - 1365 (2734 - 3009)
		Rear	kg (lb)	1130 - 1290 (2491 - 2844)	1090 - 1275 (2403 - 2811)	1080 - 1305 (2381 - 2877)	1090 - 1265 (2043 - 2789)
		Total	kg (lb)	2345 - 2610 (5170 - 5754)	2320 - 2620 (5115 - 5776)	2320 - 2650 (5115 - 5842)	2330 - 2630 (5137 - 5798)
	Gross Vehicle Weight	Front	kg (lb)	—	—	—	—
		Rear	kg (lb)	—	—	—	—
		Total	kg (lb)	3160 (6967)	3260 (7187)	3260 (7187)	3260 (7187)
	Fuel Tank Capacity		ℓ (Imp.gal.)	96 + 45 (21.1 + 9.9)	96 + 45 (21.1 + 9.9)	96 + 45 (21.1 + 9.9)	96 + 45 (21.1 + 9.9)
	Luggage Compartment Capacity		m^3 (cu.ft.)	—	—	—	—
Performance	Max. Speed		km / h (mph)	180 (112)	180 (112)	180 (112)	180 (112)
	Max. Cruising Speed		km / h (mph)	—	—	—	—
	Max. Permissible Speed	1st Gear	km / h (mph)	21 (13)*5, 51 (31)*6	17 (11)*5, 40 (25)*6	17 (11)*5, 40 (25)*6	19 (12)*5, 47 (29)*6
		2nd Gear	km / h (mph)	40 (25)*5, 97 (60)*6	29 (18)*5, 72 (45)*6	29 (18)*5, 72 (45)*6	33 (20)*5, 81 (50)*6
		3rd Gear	km / h (mph)	—	45 (28)*5, 111 (69)*6	45 (28)*5, 111 (69)*6	—
		4th Gear	km / h (mph)	—	67 (42)*5, 165 (102)*6	67 (42)*5, 165 (102)*6	—
	Min. Turning Radius	Tire	m (ft.)	5.9 (19.4)	5.9 (19.4)	5.9 (19.4)	5.9 (19.4)
		Body	m (ft.)	6.3 (20.7)	6.3 (20.7)	6.3 (20.7)	6.3 (20.7)
Engine	Engine Type			1FZ-FE	2UZ-FE	2UZ-FE	2UZ-FE
	Valve Mechanism			24-Valve, DOHC	32-Valve, DOHC	32-Valve, DOHC	32-Valve, DOHC
	Bore x Stroke		mm (in.)	100.0 x 95.0 (3.97 x 3.74)	94.0 x 84.0 (3.70 x 3.31)	94.0 x 84.0 (3.70 x 3.31)	94.0 x 84.0 (3.70 x 3.31)
	Displacement		cm^3 (cu.in.)	4477 (573.1)	4664 (284.5)	4664 (284.5)	4664 (284.5)
	Compression Ratio			9.0 : 1	9.6 : 1	9.6 : 1	9.6 : 1
	Fuel System			EFI	EFI	EFI	EFI
	Research Octane No. or Cetane No. (Diesel)			91 or higher	91 or higher	91 or higher	91 or higher
	Max. Output		kW / rpm	155 / 4600 (SAE-NET)	170 / 4800 (SAE-NET)	170 / 4800 (SAE-NET)	170 / 4800 (SAE-NET)
	Max. Torque		N·m / rpm	373 / 3600 (SAE-NET)	410 / 3400 (SAE-NET)	410 / 3400 (SAE-NET)	410 / 3400 (SAE-NET)
Engine Electrical	Battery Capacity (5HR)		Voltage & Amp. hr.	12-55	12-55	12-55	12-55
	Alternator Output		Watts	960, 1200*7	960	960	960
	Starter Output		kW	1.4, 2.0*7	1.4	1.4	1.4
Chassis	Clutch Type			—	Dry, Single Plate Diaphragm	Dry, Single Plate Diaphragm	—
	Transmission Type			A442F	H151F	H151F	A750F
	Transmission Gear Ratio	In First		2.950	4.081	4.081	3.520
		In Second		1.530	2.294	2.294	2.042
		In Third		1.000	1.490	1.490	1.400
		In Fourth		0.765	1.000	1.000	1.000
		In Fifth		—	0.881	0.881	0.716
		In Reverse		2.678	4.313	4.313	3.224
	Transfer Gear Ratio H4 / L4			1.000 / 2.488	1.000 / 2.488	1.000 / 2.488	1.000 / 2.488
	Differential Gear Ratio (Front / Rear)			4.300 / 4.300	4.300 / 4.300	4.300 / 4.300	4.100 / 4.100
	Differential Gear Size (Front / Rear)		in.	8" / 9.5"	8" / 9.5"	8" / 9.5"	8" / 9.5"
	Brake Type	Front		Ventilated Disc	Ventilated Disc	Ventilated Disc	Ventilated Disc
		Rear		L. T Drum, Ventilated Disc*9	L. T Drum, Ventilated Disc*9	L. T Drum, Ventilated Disc*9	L. T Drum, Ventilated Disc*9
	Parking Brake Type			Drum	Drum	Drum	Drum
	Brake Booster Type and Size		in.	Vacuum, Hydraulic*9	Vacuum, Hydraulic*9	Vacuum, Hydraulic*9	Vacuum, Hydraulic*9
	Proportioning Valve Type			LSP & BV, P & B Valve*9	LSP & BV, P & B Valve*9	LSP & BV, P & B Valve*9	LSP & BV, P & B Valve*9, -*16
	Suspension Type	Front		Double Wishbone	Double Wishbone	Double Wishbone	Double Wishbone
		Rear		4-Link with Lateral Rod	4-Link with Lateral Rod	4-Link with Lateral Rod	4-Link with Lateral Rod
	Stabilizer Bar	Front		Standard	Standard	Standard	Standard
		Rear		Standard	Standard	Standard	Standard
	Steering Gear Type			Rack & Pinion	Rack & Pinion	Rack & Pinion	Rack & Pinion
	Steering Gear Ratio (Overall)			17.3	17.3	17.3	17.3
	Power Steering Type			Integral Type	Integral Type	Integral Type	Integral Type

*: Unladed Vehicle
*1: With Electrical Winch +50 mm (2.0 in.)
*2: With Roof Rail +40 mm (1.6 in.)
*3: With AHC
*4: With 3rd Seat
*5: Transfer in Low
*6: Transfer in High
*7: Option
*8: With 275 / 70R16 Tire
*9: With ABS
*10: With Back Door-Mounted Spare Tire, Tire Size 235 / 85R16 +295 mm (11.6 in.), Tire Size 275 / 70R16 +305 (12.0 in.), Tire Size 7.50R16 +265 mm (10.4 in.)
*11: With Roof Rack +230 mm (9.1 in.)
*12: With Grille Guard +75 mm (3.0 in.)
*13: With 7.50R16 Tire

G.C.C. Countries	General Countries				
Wagon (Lift-Up Back Door)	Wagon (Swing Back Door) VX	Wagon (Swing Back Door)	Wagon (Lift-Up Back Door)		Wagon (Swing Back Door)
VX	STD	GX			STD
UZJ100L-GNAEKV	FZJ105L–GCMRK	FZJ105L–GCMNK	FZJ105–GNMNK	FZJ105R–GNMNK	HZJ105R–GCMRS
4890 (192.5)*1, *10, *12	4890 (192.5)*1, *10	4890 (192.5)*1, *10	4890 (192.5)*1, *10	4890 (192.5)*1, 10	4890 (192.5)*1, 10
1940 (76.4)	1940 (76.4)	1940 (76.4)	1940 (76.4)	1940 (76.4)	1940 (76.4)
860 (73.2)*11, 1850 (72.8)*3, *11	1925 (75.8)*2, *11, 1930 (76.0)*2, *11, *13	1925 (75.8)*2, *11, 1920 (75.6)*2, *8, *11, 1930 (76.0)*2, *11, *13	1925 (75.8)*2, *11, 1920 (75.6)*2, *8, *11, 1930 (76.0)*2, *11, *13	1925 (75.8)*2, *11, 1920 (75.6)*2, *8, *11, 1930 (76.0)*2, *11, *13	1925 (75.8)*2, *11, 1930 (76.0)*2, *11, *13
2850 (112.2)	2850 (112.2)	2850 (112.2)	2850 (112.2)	2850 (112.2)	2850 (112.2)
1620 (63.8)	1605 (63.2)	1605 (63.2)	1605 (63.2)	1605 (63.2)	1605 (63.2)
1615 (63.6)	1600 (63.0)	1600 (63.0)	1600 (63.0)	1600 (63.0)	1600 (63.0)
2505 (98.6)	1805 (71.1)	1805 (71.1)	1805 (71.1)	1805 (71.1)	1805 (71.1)
1620 (63.8)	1615 (63.6)	1615 (63.6)	1615 (63.6)	1615 (63.6)	1615 (63.6)
1145 (45.1), 1150 (45.3)*15	1180 (46.5)	1180 (46.5)	1180 (46.5)	1180 (46.5)	1180 (46.5)
335 (13.2)	1085 (42.7)	1085 (42.7)	1085 (42.7)	1085 (42.7)	1085 (42.7)
—	—	—	—	—	—
995 (39.2)	1065 (41.9)	1065 (41.9)	1065 (41.9)	1065 (41.9)	1065 (41.9)
895 (35.2)*1, 12	895 (35.2)*1	895 (35.2)*1	895 (35.2)*1	895 (35.2)*1	895 (35.2)*1
1145 (45.1)*10	1145 (45.1)*10	1145 (45.1)*10	1145 (45.1)*10	1145 (45.1)*10	1145 (45.1)*10
—	—	—	—	—	—
—	—	—	—	—	—
—	—	—	—	—	—
1250 - 1370 (2756 - 3020)	1160 - 1250 (2557 - 2756)	1170 - 1300 (2579 - 2866)	1165 - 1290 (2568 - 2844)	1165 - 1285 (2568 - 2833)	1200 - 1290 (2646 - 2844)
1080 - 1295 (2381 - 2855)	1090 - 1230 (2403 - 2712)	1080 - 1240 (2381 - 2739)	1090 - 1245 (2403 - 2745)	1090 - 1245 (2403 - 2745)	1080 - 1220 (2381 - 2690)
2330 - 2665 (5137 - 5875)	2250 - 2480 (4960 - 5467)	2250 - 2540 (4960 - 5660)	2255 - 2535 (4971 - 5589)	2255 - 2530 (4971 - 5578)	2280 - 2510 (5027 - 5534)
—	—	—	—	—	—
—	—	—	—	—	—
3260 (7187)	3160 (6967)	3160 (6967)	3160 (6967)	3160 (6967)	3160 (6967)
6 + 45 (21.1 + 9.9)	95 (20.9), 95 + 50 (20.9 + 11.0)*7	95 (20.9), 95 + 50 (20.9 + 11.0)*7	95 (20.9), 95 + 50 (20.9 + 11.0)*7	95 (20.9), 95 + 50 (20.9 + 11.0)*7	95 (20.9), 95 + 50 (20.9 + 11.0)*7
—	—	—	—	—	—
180 (112)	175 (109)	175 (109)	175 (109)	175 (109)	155 (96)
—	—	—	—	—	—
19 (12)*5, 47 (29)*6	16 (10)*5, 39 (24)*6	16 (10)*5, 39 (24)*6	16 (10)*5, 39 (24)*6	16 (10)*5, 39 (24)*6	13 (8)*5, 32 (20)*6
33 (20)*5, 81 (50)*6	28 (17)*5, 70 (43)*6	28 (17)*5, 70 (43)*6	28 (17)*5, 70 (43)*6	28 (17)*5, 70 (43)*6	25 (16)*5, 60 (37)*6
—	44 (27)*5, 107 (66)*6	44 (27)*5, 107 (66)*6	44 (27)*5, 107 (66)*6	44 (27)*5, 107 (66)*6	40 (25)*5, 97 (60)*6
—	65 (40)*5, 160 (99)*6	65 (40)*5, 160 (99)*6	65 (40)*5, 160 (99)*6	65 (40)*5, 160 (99)*6	57 (35)*5, 140 (87)*6
5.9 (19.4)	6.0 (19.7)	6.0 (19.7)	6.0 (19.7)	6.0 (19.7)	6.0 (19.7)
6.3 (20.7)	6.4 (21.0)	6.4 (21.0)	6.4 (21.0)	6.4 (21.0)	6.4 (21.0)
2UZ-FE	1FZ-FE	1FZ-FE	1FZ-FE	1FZ-FE	1HZ
32-Valve, DOHC	24-Valve, DOHC	24-Valve, DOHC	24-Valve, DOHC	24-Valve, DOHC	12-Valve, OHC
94.0 x 84.0 (3.70 x 3.31)	100.0 x 95.0 (3.97 x 3.74)	100.0 x 95.0 (3.97 x 3.74)	100.0 x 95.0 (3.97 x 3.74)	100.0 x 95.0 (3.97 x 3.74)	94.0 x 100.0 (3.70 x 3.94)
4664 (284.5)	4477 (573.1)	4477 (573.1)	4477 (573.1)	4477 (573.1)	4164 (254.0)
9.6 : 1	9.0 : 1	9.0 : 1	9.0 : 1	9.0 : 1	22.4 : 1
EFI	EFI	EFI	EFI	EFI	Distributor Type
91 or higher	91 or higher	91 or higher	91 or higher	91 or higher	48 or higher
170 / 4800 (SAE-NET)	165 / 4600 (SAE-NET)	165 / 4600 (SAE-NET)	165 / 4600 (SAE-NET)	165 / 4600 (SAE-NET)	96 / 3800 (SAE-NET)
410 / 3400 (SAE-NET)	387 / 3600 (SAE-NET)	387 / 3600 (SAE-NET)	387 / 3600 (SAE-NET)	387 / 3600 (SAE-NET)	285 / 2200 (SAE-NET)
12-55	12-55	12-55	12-55	12-55	12-55, 64*7
960	960	960	960	960	840
1.4	1.4, 2.0*7	1.4, 2.0*7	1.4, 2.0*7	1.4, 2.0*7	2.5
—	Dry, Single Plate Diaphragm	Dry, Single Plate Diaphragm	Dry, Single Plate Diaphragm	Dry, Single Plate Diaphragm	Dry, Single Plate Diaphragm
A750F	H151F	H151F	H151F	H151F	R151F
3.520	4.081	4.081	4.081	4.081	4.313
2.042	2.294	2.294	2.294	2.294	2.330
1.400	1.490	1.490	1.490	1.490	1.436
1.000	1.000	1.000	1.000	1.000	1.000
0.716	0.881	0.881	0.881	0.881	0.838
3.224	4.313	4.313	4.313	4.313	4.220
1.000 / 2.488	1.000 / 2.488	1.000 / 2.488	1.000 / 2.488	1.000 / 2.488	1.000 / 2.488
4.100 / 4.100	4.300 / 4.300	4.300 / 4.300	4.300 / 4.300	4.300 / 4.300	4.300 / 4.300
8” / 9.5”	8” / 9.5”	8” / 9.5”	8” / 9.5”	8” / 9.5”	8” / 9.5”
Ventilated Disc	Ventilated Disc	Ventilated Disc	Ventilated Disc	Ventilated Disc	Ventilated Disc
L. T Drum, Ventilated Disc*9	L. T Drum, Ventilated Disc*7	L. T Drum, Ventilated Disc*9	L. T Drum, Ventilated Disc*9	L. T Drum, Ventilated Disc*9	L. T Drum, Ventilated Disc*7
Drum	Drum	Drum	Drum	Drum	Drum
Vacuum, Hydraulic*9	Vacuum	Vacuum, Hydraulic*9	Vacuum, Hydraulic*9	Vacuum, Hydraulic*9	Vacuum
LSP & BV, P & B Valve*9, -*16	LSP & BV	LSP & BV, P & B Valve*9	LSP & BV, P & B Valve*9	LSP & BV, P & B Valve*9	LSP & BV
Double Wishbone	Leading Arm, Coil	Leading Arm, Coil	Leading Arm, Coil	Leading Arm, Coil	Leading Arm, Coil
4-Link with Lateral Rod	4-Link with Lateral Rod	4-Link with Lateral Rod	4-Link with Lateral Rod	4-Link with Lateral Rod	4-Link with Lateral Rod
Standard	Standard	Standard	Standard	Standard	Standard
Standard	Standard	Standard	Standard	Standard	Standard
Rack & Pinion	Recerculating Ball	Recerculating Ball	Recerculating Ball	Recerculating Ball	Recerculating Ball
17.3	18.59	18.59	18.59	18.59	18.59
Integral Type	Integral Type	Integral Type	Integral Type	Integral Type	Integral Type

*14: With AHC -50 mm (2.0 in.)
*15: With Moon Roof
*16: With VSC
*19: Separate Seat, Seating Capacity : 5

5

Item / Area				General Countries			
Body Type				Wagon (Swing Back Door)		Wagon (Lift-Up Back Door)	Wagon (Swing Back Door)
Vehicle Grade				STD	GX		
Model Code				HZJ105L-GCMRS	HZJ105R-GCMNS	HZJ105R-GNMNS	HZJ105L-GCMNS
Major Dimensions & Vehicle Weights	Overall	Length	mm (in.)	4890 (192.5)*1, 10	4890 (192.5)*1, 10	4890 (192.5)*1, 10	4890 (192.5)*1, 10
		Width	mm (in.)	1940 (76.4)	1940 (76.4)	1940 (76.4)	1940 (76.4)
		Height	mm (in.)	1925 (75.8)*2, *11, 1930 (76.0)*2, *11, *13	1925 (75.8)*2, *11, 1920 (75.6)*2, *8, *11, 1930 (76.0)*2, *11, *13	1925 (75.8)*2, *11, 1920 (75.6)*2, *8, *11, 1930 (76.0)*2, *11, *13	1925 (75.8)*2, *11, 1920 (75.6)*2, *8, *11, 1930 (76.0)*2, *11, *13
	Wheel Base		mm (in.)	2850 (112.2)	2850 (112.2)	2850 (112.2)	2850 (112.2)
	Tread	Front	mm (in.)	1605 (63.2)	1605 (63.2)	1605 (63.2)	1605 (63.2)
		Rear	mm (in.)	1600 (63.0)	1600 (63.0)	1600 (63.0)	1600 (63.0)
	Room	Length	mm (in.)	1805 (71.1)	1805 (71.1)	1805 (71.1)	1805 (71.1)
		Width	mm (in.)	1615 (63.6)	1615 (63.6)	1615 (63.6)	1615 (63.6)
		Height	mm (in.)	1180 (46.5)	1180 (46.5), 1150 (45.3)*15	1180 (46.5), 1150 (45.3)*15	1180 (46.5), 1150 (45.3)*15
	Cargo Space	Length	mm (in.)	1085 (42.7)	1085 (42.7)	1085 (42.7)	1085 (42.7)
		Width	mm (in.)	-	—	—	—
		Height	mm (in.)	1065 (41.9)	1065 (41.9)	1065 (41.9)	1065 (41.9)
	Overhang	Front	mm (in.)	895 (35.2)*1	895 (35.2)*1	859 (35.2)*1	859 (35.2)*1
		Rear	mm (in.)	1145 (45.1)*10	1145 (45.1)*10	1145 (45.1)*10	1145 (45.1)*10
	Min. Running Ground Clearance		mm (in.)	—	—	—	—
	Angle of Approach		degrees	—	—	—	—
	Angle of Departure		degrees	—	—	—	—
	Curb Weight*19	Front	kg (lb)	1200 - 1300 (2646 - 2866)	1210 - 1340 (2668 - 2954)	1205 - 1330 (2657 - 2932)	1210 - 1340 (2668 - 2954)
		Rear	kg (lb)	1080 - 1220 (2381 - 2690)	1090 - 1245 (2403 - 2745)	1100 - 1250 (2425 - 2756)	1090 - 1250 (2403 - 2756)
		Total	kg (lb)	2280 - 2520 (5027 - 5556)	2300 - 2585 (5071 - 5699)	2305 - 2580 (5082 - 5688)	2300 - 2590 (5071 - 5710)
	Gross Vehicle Weight	Front	kg (lb)	—	—	—	—
		Rear	kg (lb)	—	—	—	—
		Total	kg (lb)	3160 (6967)	3160 (6967)	3160 (6967)	3160 (6967)
	Fuel Tank Capacity		ℓ(Imp.gal.)	95 (20.9), 95 + 50 (20.9 + 11.0)*7	95 (20.9), 95 + 50 (20.9 + 11.0)*7	95 (20.9), 95 + 50 (20.9 + 11.0)*7	95 (20.9), 95 + 50 (20.9 + 11.0)*7
	Luggage Compartment Capacity		m^3 (cu.ft.)	—	—	—	—
Performance	Max. Speed		km / h (mph)	155 (96)	155 (96)	155 (96)	155 (96)
	Max. Cruising Speed		km / h (mph)	—	—	—	—
	Max. Permissible Speed	1st Gear	km / h (mph)	13 (8)*5, 32 (20)*6	13 (8)*5, 32 (20)*6	13 (8)*5, 32 (20)*6	13 (8)*5, 32 (20)*6
		2nd Gear	km / h (mph)	25 (16)*5, 60 (37)*6	25 (16)*5, 60 (37)*6	25 (16)*5, 60 (37)*6	25 (16)*5, 60 (37)*6
		3rd Gear	km / h (mph)	40 (25)*5, 97 (60)*6	40 (25)*5, 97 (60)*6	40 (25)*5, 97 (60)*6	40 (25)*5, 97 (60)*6
		4th Gear	km / h (mph)	57 (35)*5, 140 (87)*6	57 (35)*5, 140 (87)*6	57 (35)*5, 140 (87)*6	57 (35)*5, 140 (87)*6
	Min. Turning Radius	Tire	m (ft.)	6.0 (19.7)	6.0 (19.7)	6.0 (19.7)	6.0 (19.7)
		Body	m (ft.)	6.4 (21.0)	6.4 (21.0)	6.4 (21.0)	6.4 (21.0)
Engine	Engine Type			1HZ	1HZ	1HZ	1HZ
	Valve Mechanism			12-Valve, OHC	12-Valve, OHC	12-Valve, OHC	12-Valve, OHC
	Bore x Stroke		mm (in.)	94.0 x 100.0 (3.70 x 3.94)	94.0 x 100.0 (3.70 x 3.94)	94.0 x 100.0 (3.70 x 3.94)	94.0 x 100.0 (3.70 x 3.94)
	Displacement		cm^3 (cu.in.)	4164 (254.0)	4164 (254.0)	4164 (254.0)	4164 (254.0)
	Compression Ratio			22.4 : 1	22.4 : 1	22.4 : 1	22.4 : 1
	Fuel System			Distributor Type	Distributor Type	Distributor Type	Distributor Type
	Research Octane No. or Cetane No. (Diesel)			48 or higher	48 or higher	48 or higher	48 or higher
	Max. Output		kW/rpm	96 / 3800 (SAE-NET)	96 / 3800 (SAE-NET)	96 / 3800 (SAE-NET)	96 / 3800 (SAE-NET)
	Max. Torque		N·m / rpm	285 / 2200 (SAE-NET)	285 / 2200 (SAE-NET)	285 / 2200 (SAE-NET)	285 / 2200 (SAE-NET)
Engine Electrical	Battery Capacity (5HR)		Voltage & Amp. hr.	12-55, 64*7, 64 x 2*7	12-55, 64*7	12-55, 64*7	12-55, 64*7, 64 x 2*7
	Alternator Output		Watts	84, 960*7	840	840	840, 960*7
	Starter Output		kW	2.5, 3.0*7	2.5	2.5	2.5, 3.0*7
Chassis	Clutch Type			Dry, Single Plate Diaphragm	Dry, Single Plate Diaphragm	Dry, Single Plate Diaphragm	Dry, Single Plate Diaphragm
	Transmission Type			R151F	R151F	R151F	R151F
	Transmission Gear Ratio	In First		4.313	4.313	4.313	4.313
		In Second		2.330	2.330	2.330	2.330
		In Third		1.436	1.436	1.436	1.436
		In Fourth		1.000	1.000	1.000	1.000
		In Fifth		0.838	0.838	0.838	0.838
		In Reverse		4.220	4.220	4.220	4.220
	Transfer Gear Ratio H4 / L4			1.000 / 2.488	1.000 / 2.488	1.000 / 2.488	1.000 / 2.488
	Differential Gear Ratio (Front / Rear)			4.300 / 4.300	4.300 / 4.300	4.300 / 4.300	4.300 / 4.300
	Differential Gear Size (Front / Rear)		in.	8" / 9.5"	8" / 9.5"	8" / 9.5"	8" / 9.5"
	Brake Type	Front		Ventilated Disc	Ventilated Disc	Ventilated Disc	Ventilated Disc
		Rear		L. T Drum, Ventilated Disc*9	L. T Drum, Ventilated Disc*9	L. T Drum, Ventilated Disc*9	L. T Drum, Ventilated Disc*9
	Parking Brake Type			Drum	Drum	Drum	Drum
	Brake Booster Type and Size		in.	Vacuum, Hydraulic*9	Vacuum, Hydraulic*9	Vacuum, Hydraulic*9	Vacuum, Hydraulic*9
	Proportioning Valve Type			LSP & BV, P & B Valve*9	LSP & BV, P & B Valve*9	LSP & BV, P & B Valve*9	LSP & BV, P & B Valve*9
	Suspension Type	Front		Leading Arm, Coil	Leading Arm, Coil	Leading Arm, Coil	Leading Arm, Coil
		Rear		4-Link with Lateral Rod	4-Link with Lateral Rod	4-Link with Lateral Rod	4-Link with Lateral Rod
	Stabilizer Bar	Front		Standard	Standard	Standard	Standard
		Rear		Standard	Standard	Standard	Standard
	Steering Gear Type			Recerculating Ball	Recerculating Ball	Recerculating Ball	Recerculating Ball
	Steering Gear Ratio (Overall)			18.59	18.59	18.59	18.59
	Power Steering Type			Integral Type	Integral Type	Integral Type	Integral Type

*: Unladed Vehicle
*1: With Electrical Winch +50 mm (2.0 in.)
*2: With Roof Rail +40 mm (1.6 in.)
*3: With AHC
*4: With 3rd Seat
*5: Transfer in Low
*6: Transfer in High
*7: Option
*8: With 275 / 70R16 Tire
*9: With ABS
*10: With Back Door-Mounted Spare Tire, Tire Size 235 / 85R16 +295 mm (11.6 in.), Tire Size 275 / 70R16 +305 (12.0 in.), Tire Size 7.50R16 +265 mm (10.4 in.)
*11: With Roof Rack +230 mm (9.1 in.)
*12: With Grille Guard +75 mm (3.0 in.)
*13: With 7.50R16 Tire

	General Countries					
	Wagon (Lift-Up Back Door)	Wagon (Lift-Up Back Door)		Wagon (Swing Back Door)	Wagon (Lift-Up Back Door)	
	GX	VX				
	HZJ105L-GNMNS	UZJ100L-GNAEK	HDJ100R-GNMEZ	HDJ100L-GOMEZ	HDJ100L-GNMEZ	HDJ100L-GNAEZ
5	4890 (192.5)*1, 10	4890 (192.5)*1, 10, 12	4890 (192.5)*1, 10, 12	4890 (192.5)*1, 10, 12	4890 (192.5)*1, 10, 12	4890 (192.5)*1, 10, 12
	1940 (76.4)	1940 (76.4)	1940 (76.4)	1940 (76.4)	1940 (76.4)	1940 (76.4)
	1925 (75.8)*2, *11, 1920 (75.6)*2, *8, *11, 1930 (76.0)*2, *11, *13	1920 (75.6)*2, *11, *14 1900 (74.8)*2, *8, *11, *14	1920 (75.6)*2, *11, *14 1900 (74.8)*2, *8, *11, *14	1920 (75.6)*2, *11, 1900 (4.8)*2, *8, *11	1920 (75.6)*2, 11, 1900 (4.8)*2, 8, 11	1920 (75.6)*2, *11, 1900 (4.8)*2, *8, *11
	2850 (112.2)	2850 (112.2)	2850 (112.2)	2850 (112.2)	2850 (112.2)	2850 (112.2)
	1605 (63.2)	1640 (64.6), 1620 (63.8)*8	1640 (64.6), 1620 (63.8)*8	1640 (64.6), 1620 (63.8)*8	1640 (64.6), 1620 (63.8)*8	1640 (64.6), 1620 (63.8)*8
10	1600 (63.0)	1635 (64.4), 1615 (63.6)*8	1635 (64.4), 1615 (63.6)*8	1635 (64.4), 1615 (63.6)*8	1635 (64.4), 1615 (63.6)*8	1635 (64.4), 1615 (63.6)*8
	1805 (71.1)	2505 (98.6)*4	2505 (98.6)*4	2505 (98.6)*4	2505 (98.6)*4	2505 (98.6)*4
	1615 (63.6)	1620 (63.8)*4	1620 (63.8)*4	1620 (63.8)*4	1620 (63.8)*4	1620 (63.8)*4
	1180 (46.5), 1150 (45.3)*15	1145 (45.1), 1150 (45.3)*4	1145 (45.1), 1150 (45.3)*4	1145 (45.1), 1150 (45.3)*4	1145 (45.1), 1150 (45.3)*4	1145 (45.1), 1150 (45.3)*4
	1085 (42.7)	335 (13.1)*4	335 (13.1)*4	335 (13.1)*4	335 (13.1)*4	335 (13.1)*4
15	—	—	—	—	—	—
	1065 (41.9)	995 (39.2)*4	995 (39.2)*4	995 (39.2)*4	995 (39.2)*4	995 (39.2)*4
	895 (35.2)*1	895 (35.2)*1, 12	895 (35.2)*1, 12	895 (35.2)*1, 12	895 (35.2)*1, 12	895 (35.2)*1, 12
	1145 (45.1)*10	1145 (45.1)*10	1145 (45.1)*10	1145 (45.1)*10	1145 (45.1)*10	1145 (45.1)*10
	—	—	—	—	—	—
20	—	—	—	—	—	—
	—	—	—	—	—	—
	1205 - 1330 (2657 - 2932)	1220 - 1385 (2690 - 3053)	1280 - 1425 (2822 - 3142)*21	1280 - 1375 (2822 - 3031)	1280 - 1425 (2822 - 3142)	1320 - 1435 (2910 - 3164)
	1100 - 1255 (2425 - 2767)	1110 - 1280 (2447 - 2822)	1120 - 1305 (2469 - 2877)*21	1150 - 1280 (2535 - 2822)	1120 - 1305 (2469 - 2877)	1120 - 1310 (2469 - 2888)
	2305 - 2585 (5082 - 5699)	2330 - 2665 (5137 - 5875)	2400 - 2730 (5291 - 6019)*21	2430 - 2655 (5357 - 5853)	2400 - 2730 (5291 - 6019)	2440 - 2745 (5379 - 6052)
25						
	3160 (6967)	3260 (7187)	3260 (7187)	3260 (7187)	3260 (7187)	3260 (7187)
	95 (20.9), 95 + 50 (20.9 + 11.0)*7	96 + 45 (21.1 + 9.9)	96 (21.1), 96 + 45 (21.1 + 9.9)*7	96 (21.1), 96 + 45 (21.1 + 9.9)*7	96 (21.1), 96 + 45 (21.1 + 9.9)*7	96 (21.1), 96 + 45 (21.1 + 9.9)*7
	—	—	—	—	—	—
30	155 (96)	180 (112)	175 (109)	175 (109)	175 (109)	180 (112)
	—	—	—	—	—	—
	13 (8)*5, 32 (20)*6	19 (12)*5, 47 (29)*6	14 (19)*5, 35 (22)*6	14 (19)*5, 35 (22)*6	14 (19)*5, 35 (22)*6	14 (19)*5, 35 (22)*6
	25 (16)*5, 60 (37)*6	33 (20)*5, 81 (50)*6	26 (16)*5, 63 (39)*6	26 (16)*5, 63 (39)*6	26 (16)*5, 63 (39)*6	26 (16)*5, 63 (39)*6
	40 (25)*5, 97 (60)*6	—	39 (24)*5, 97 (60)*6	39 (24)*5, 97 (60)*6	39 (24)*5, 97 (60)*6	39 (24)*5, 97 (60)*6
35	57 (35)*5, 140 (87)*6	—	59 (37)*5, 144 (89)*6	59 (37)*5, 144 (89)*6	59 (37)*5, 144 (89)*6	59 (37)*5, 144 (89)*6
	6.0 (19.7)	5.9 (19.4)	5.9 (19.4)	5.9 (19.4)	5.9 (19.4)	5.9 (19.4)
	6.4 (21.0)	6.3 (20.7)	6.3 (20.7)	6.3 (20.7)	6.3 (20.7)	6.3 (20.7)
	1HZ	2UZ-FE	1HD-FTE	1HD-FTE	1HD-FTE	1HD-FTE
	12-Valve, OHC	32-Valve, DOHC	24-Valve, OHC	24-Valve, OHC	24-Valve, OHC	24-Valve, OHC
40	94.0 x 100.0 (3.70 x 3.94)	94.0 x 84.0 (3.70 x 3.31)	94.0 x 100.0 (3.70 x 3.94)	94.0 x 100.0 (3.70 x 3.94)	94.0 x 100.0 (3.70 x 3.94)	94.0 x 100.0 (3.70 x 3.94)
	4164 (254.0)	4664 (284.5)	4164 (254.0)	4164 (254.0)	4164 (254.0)	4164 (254.0)
	22.4 : 1	9.6 : 1	18.8 : 1	18.8 : 1	18.8 : 1	18.8 : 1
	Distributor Type	EFI	Distributor Type	Distributor Type	Distributor Type	Distributor Type
	48 or higher	91 or higher	48 or higher	48 or higher	48 or higher	48 or higher
45	96 / 3800 (SAE-NET)	170 / 4800 (SAE-NET)	150 / 3400 (EEC)	150 / 3400 (EEC)	150 / 3400 (EEC)	150 / 3400 (EEC)
	285 / 2200 (SAE-NET)	410 / 3400 (SAE-NET)	430 / 1400 - 3200 (EEC)	430 / 1400 - 3200 (EEC)	430 / 1400 - 3200 (EEC)	430 / 1400 - 3200 (EEC)
	12-55, 64*7, 64 x 2*7	12-55	12-55 x 2	12-55 x 2	12-55 x 2	12-55 x 2
	840, 960*7	960	840, 960*7	960	840, 960*7	960
	2.5	1.4	3.0	3.0	3.0	3.0
50	Dry, Single Plate Diaphragm	—	Dry, Single Plate Diaphragm	Dry, Single Plate Diaphragm	Dry, Single Plate Diaphragm	—
	R151F	A750F	H151F	H151F	H151F	A750F
	4.313	3.520	4.081	4.081	4.081	3.520
	2.330	2.042	2.294	2.294	2.294	2.042
	1.436	1.400	1.490	1.490	1.490	1.400
55	1.000	1.000	1.000	1.000	1.000	1.000
	0.838	0.716	0.881	0.881	0.881	0.716
	4.220	3.224	4.313	4.313	4.313	3.224
	1.000 / 2.488	1.000 / 2.488	1.000 / 2.488	1.000 / 2.488	1.000 / 2.488	1.000 / 2.488
	4.300 / 4.300	4.100 / 4.100	4.100 / 4.100	4.100 / 4.100	4.100 / 4.100	3.909 / 3.909
60	8” / 9.5”	8” / 9.5”	8” / 9.5”	8” / 9.5”	8” / 9.5”	8” / 9.5”
	Ventilated Disc	Ventilated Disc	Ventilated Disc	Ventilated Disc	Ventilated Disc	Ventilated Disc
	L. T Drum	L. T Drum, Ventilated Disc*9	L. T Drum, Ventilated Disc*9	L. T Drum, Ventilated Disc*9	L. T Drum, Ventilated Disc*9	L. T Drum, Ventilated Disc*9
	Drum	Drum	Drum	Drum	Drum	Drum
	Vacuum, Hydraulic*9	Vacuum, Hydraulic*9	Vacuum, Hydraulic*9	Vacuum, Hydraulic*9	Vacuum, Hydraulic*9	Vacuum, Hydraulic*9
65	LSP & BV, P & B Valve*9	LSP & BV, P & B Valve*9, -*16	LSP & BV, P & B Valve*9	LSP & BV, P & B Valve*9	LSP & BV, P & B Valve*9	LSP & BV, P & B Valve*9
	Leading Arm, Coil	Double Wishbone	Double Wishbone	Double Wishbone	Double Wishbone	Double Wishbone
	4-Link with Lateral Rod	4-Link with Lateral Rod	4-Link with Lateral Rod	4-Link with Lateral Rod	4-Link with Lateral Rod	4-Link with Lateral Rod
	Standard	Standard	Standard	Standard	Standard	Standard
	Standard	Standard	Standard	Standard	Standard	Standard
70	Recerculating Ball	Rack & Pinion	Rack & Pinion	Rack & Pinion	Rack & Pinion	Rack & Pinion
	18.59	17.3	17.3	17.3	17.3	17.3
	Integral Type	Integral Type	Integral Type	Integral Type	Integral Type	Integral Type

*14: With AHC -50 mm (2.0 in.)
*15: With Moon Roof
*16: With VSC
*19: Separate Seat, Seating Capacity : 5
*21: Bench Seat, Seating Capacity : 10

5

– MEMO –

4. Tire and Disc Wheel

- The design of the aluminum disc wheel has been changed.

Tire Size		215/70R16	235/60R16
Disc Wheel Size		16 x 7JJ	←
Disc Wheel Material		Aluminum	←
P.C.D.*	mm (in.)	114.3 (4.5)	←
Off Set	mm (in.)	45 (1.8)	35 (1.4)
Wheel Design		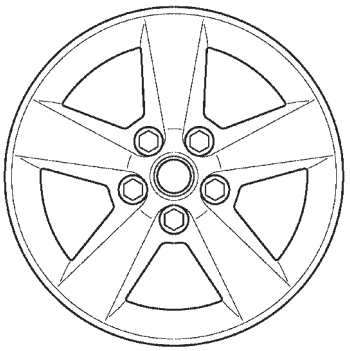 258RV11	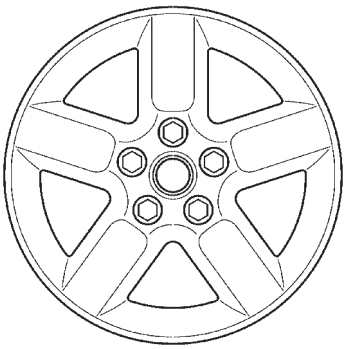 258RV12

*: Pitch Circle Diameter

LAND CRUISER (70 series)

OUTLINE OF NEW FEATURES

The following changes are made for the new Land Cruiser (70 series).

1. All Engines

The TOYOTA genuine super long life coolant (SLLC) has been adopted. As result, the maintenance interval has been extended.

2. 1HZ Engine

The diameter of the fuel pipe in the engine compartment on the model for Australia has been changed for 7.8mm to 7.6mm.

3. Manual Headlight Leveling System

A manual headlight leveling system has been newly provided on all models for Saudi Arabia.

MODEL CODE

HDJ79 R – T J M R Z Q 3

1 2 3 4 5 6 7 8 9

1 BASIC MODEL CODE

CODE	DRIVE TYPE	ENGINE	WHEEL BASE
FZJ71	4WD	1FZ-FE	Short (2310 mm)
FZJ74			Middle (2600 mm)
FZJ78			Long (2980 mm)
FZJ79			Super Long (3180 mm)
HZJ71		1HZ	Short (2310 mm)
HZJ78			Long (2980 mm)
HZJ79			Super Long (3180 mm)
HDJ78		1HD-FTE	Long (2980 mm)
HDJ79			Super Long (3180 mm)

2 STEERING WHEEL POSITION

L : Left-Hand Drive
R : Right-Hand Drive

3 BODY TYPE

R : Steel Roof Van
T : Single Cab Pick-up
F : FRP Roof Van
K : Rag Roof Van

4 DOOR

J : 2-Door

5 GEAR SHIFT TYPE

M : 5-Speed Manual, Floor

6 GRADE

R : STD
N : LX

7 ENGINE SPECIFICATION

S : Diesel
K : DOHC and EFI
Z : Multi Valve, Turbocharger and EFI

8 DESTINATION

Q : Australia
V : G.C.C. (Gulf Cooperation Council) Countries
Blank : General Countries

9 COMPLETENESS CLASSIFICATION

3 : Cab and Chassis
Blank : Complete Model

MODEL LINE-UP

DESTI-NA-TION	EN-GINE	WHEEL BASE	BODY TYPE	DOOR	GRADE	5-Speed Manual		
						R151F	H151F	H150F
Austra-lia	1FZ-FE	Long	Steel Roof Van	2	STD	—	—	FZJ78R-RJMRKQ
		Super Long	Single Cab Pick-Up			—	—	FZJ79R-TJMRKQ3
	1HZ	Long	Steel Roof Van			HZJ78R-RJMRSQ	—	—
		Super Long	Single Cab Pick-Up			HZJ79R-TJMRSQ3	—	—
	1HD-FTE	Long	Steel Roof Van			—	—	HDJ78R-RJMRZQ
					LX	—	—	HDJ78R-RJMNZQ
		Super Long	Single Cab Pick-Up		STD	—	—	HDJ79R-TJMRZQ3
					LX	—	—	HDJ79R-TJMNZQ3
G.C.C. Coun-tries	1FZ-FE	Short	Steel Roof Van		STD	—	FZJ71L-RJMRKV	—
		Middle	FRP Roof Van		LX	—	FZJ74L-FJMNKV	—
			Rag Roof Van		STD	—	FZJ74L-KJMRKV	—
		Long	Steel Roof Van			—	—	FZJ78L-RJMRKV
		Super Long	Single Cab Pick-Up			—	—	FZJ79L-TJMRKV
					LX	—	—	FZJ79L-TJMNKV
	1HZ				STD	HZJ79L-TJMRSV	—	—
General Coun-tries	1FZ-FE	Short	Steel Roof Van			—	$FZJ71^{R}_{L}$-RJMRK	—
		Middle	FRP Roof Van		LX	—	FZJ71L-RJMNK	—
			Rag Roof Van			—	FZJ74L-FJMNK	—
		Long	Steel Roof Van		STD	—	FZJ74L-KJMRK	—
		Super Long	Single Cab Pick-Up			—	—	$FZJ78^{R}_{L}$-RJMRK
						—	—	$FZJ79^{R}_{L}$-TJMRK
						—	—	FZJ79L-TJMRK3
	1HZ	Short	Steel Roof Van			$HZJ71^{R}_{L}$-RJMRS	—	—
			Rag Roof Van			HZJ71R-KJMRS	—	—
		Long	Steel Roof Van			$HZJ78^{R}_{L}$-RJMRS	—	—
		Super Long	Single Cab Pick-Up			$HZJ79^{R}_{L}$-TJMRS	—	—
						HZJ79L-TJMRS3	—	—

NEW FEATURES

■ALL ENGINES

Cooling System

The TOYOTA genuine Super Long Life Coolant (SLLC) has been adopted. As result, the maintenance interval has been extended.

▶ Specifications ◀

Model				New	Previous
Engine Coolant	Capacity Liters (US qts, Imp.qts)	1FZ-TE	M/T (Without Heater)	12.7 (13.4, 11.2)	←
		1FZ-TE	For G.C.C M/T	13.8 (14.6, 12.2)	←
			For Expect G.C.C M/T (With Rear Heater)	14.9 (15.8, 13.1)	←
			For Expect G.C.C M/T (Without Rear Heater)	13.8 (14.6, 12.1)	←
		1HD-FTE	M/T	10.9 (11.5, 9.6)	←
		1HZ	Without Heater	9.8 (10.4, 8.6)	←
			With Front Heater	10.6 (11.2, 9.3)	←
			With Front and Rear Heater	11.7 (12.4, 10.3)	←
	Type			TOYOTA Genuine SLLC	TOYOTA Genuine LLC
	Maintenance Intervals		First time	160,000 km (100,000 mile)	Every 40,000 km (25,000 mile) or 24 months whichever comes first
			Subsequent	Every 80,000 km (50,000 mile)	
	Color			Pink	Red
Thermostat	Operating Temperature °C (°F)			80-84 (176-183)	←

- SLLC is pre-mixed (50% coolant and 50% distilled water), so no dilution is needed when adding or replacing SLLC in the vehicle.
- If LLC is mixed with SLLC, the interval for LLC (every 40,000 km/25,000 miles or 24 months) should be used.
- You can also apply the new maintenance interval (every 80000 km/50,000 mile) to vehicles initially filled with LLC (red-colored) if you use SLLC (pink-colored) for the coolant change.

■MANUAL HEAD LIGHT LEVELING SYSTEM

When the vehicle posture is changed in accordance with the number (weight) of passengers and volume of luggage, this system enable to adjust the LO beam level (5-step) of the headlights manually to the appropriate level by adjusting headlight beam level control switch from driver. The beam level of the headlights can be adjusted with the actuators that are integrated in the headlight units.

▶ System Diagram ◀

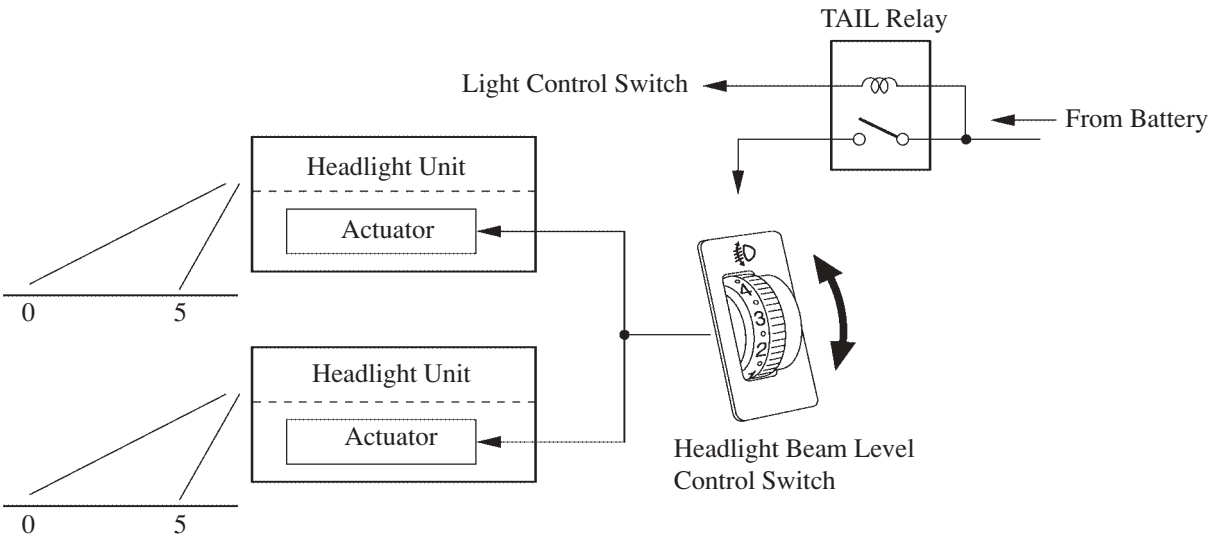

– MEMO –

MAJOR TECHNICAL SPECIFICATIONS

Item \ Area				Australia			
Body Type				Steel Roof Van	Single Cab Pick-Up	Steel Roof Van	Single Cab Pick-Up
Vehicle Grade				Standard			
Model Code				FZJ78R-RJMRKQ	FZJ79R-TJMRKQ3	HZJ78R-RJMRSQ	HZJ79R-TJMRSQ3
Major Dimensions & Vehicle Weights	Overall	Length	mm (in.)	5060 (199.2), 4980 (196.1)*5	5075 (199.8)	5060 (199.2)	5075 (199.8)
		Width	mm (in.)	1690 (66.5)*4	1690 (66.5)*4	1690 (66.5)*4	1690 (66.5)*4
		Height	mm (in.)	2115 (83.3)*4	1970 (77.6)*4	2115 (83.3)*4	1970 (77.6)*4
	Wheel Base		mm (in.)	2980 (117.3)	3180 (125.2)	2980 (117.3)	3180 (125.2)
	Tread	Front	mm (in.)	1435 (56.5)	1435 (56.5)	1435 (56.5)	1435 (56.5)
		Rear	mm (in.)	1420 (55.9)	1420 (55.9)	1420 (55.9)	1420 (55.9)
	Room	Length	mm (in.)	—	—	—	—
		Width	mm (in.)	—	—	—	—
		Height	mm (in.)	—	—	—	—
	Cargo Space	Length	mm (in.)	—	—	—	—
		Width	mm (in.)	—	—	—	—
		Height	mm (in.)	—	—	—	—
	Overhang	Front	mm (in.)	—	—	—	—
		Rear	mm (in.)	—	—	—	—
	Min. Running Ground Clearance		mm (in.)	—	—	—	—
	Angle of Approach		degrees	—	—	—	—
	Angle of Departure		degrees	—	—	—	—
	Curb Weight	Front	kg (lb)	1095 - 1125 (2414 - 2480)	1120 - 1140 (2469 - 2513)	1115 - 1135 (2458 - 2502)	1165 - 1205 (2568 - 2657)
		Rear	kg (lb)	1020 - 1125 (2249 - 2480)	830 - 870 (1830 - 1918)	1025 - 1130 (2260 - 2491)	735 - 775 (1620 - 1709)
		Total	kg (lb)	2115 - 2250 (4663 - 4960)	1950 - 2010 (4299 - 4431)	2135 - 2265 (4707 - 4993)	1900-1980 (4189 - 4365)
	Gross Vehicle Weight	Front	kg (lb)	1340 (2954)	1400 (3086)	1340 (2954)	1400 (3086)
		Rear	kg (lb)	1860 (4101)	1800 (3968)	1860 (4101)	1800 (3968)
		Total	kg (lb)	3200 (7055)	3200 (7055)	3200 (7055)	3200 (7055)
	Fuel Tank Capacity		ℓ(Imp.gal.)	90 + 90 (19.8 + 19.8), 90 (19.8)*5	90 + 90 (19.8 + 19.8), 90 (19.8)*5	90 + 90 (19.8 + 19.8)	90 + 90 (19.8 + 19.8), 90 (19.8)*5
	Luggage Compartment Capacity		m^3 (cu.ft.)	—	—	—	—
Performance	Max. Speed		km / h (mph)	165 (102)	165 (102)	140 (87.5)	140 (87.5)
	Max. Permissible Speed	1st Gear	km / h (mph)	16 (10)*6, 39 (24)*7	16 (10)*6, 39 (24)*7	15 (9)*6, 35 (22)*7	15 (9)*6, 35 (22)*7
		2nd Gear	km / h (mph)	29 (18)*6, 71 (44)*7	29 (18)*6, 71 (44)*7	28 (17)*6, 65 (40)*7	28 (17)*6, 65 (40)*7
		3rd Gear	km / h (mph)	47 (29)*6, 118 (73)*7	47 (29)*6, 118 (73)*7	46 (29)*6, 106 (66)*7	46 (29)*6, 106 (66)*7
		4th Gear	km / h (mph)	—	—	—	—
	Min. Turning Radius	Tire	m (ft.)	—	—	—	—
		Body	m (ft.)	—	—	—	—
Engine	Engine Type			1FZ-FE	1FZ-FE	1HZ	1HZ
	Valve Mechanism			24-Valve, DOHC	24-Valve, DOHC	12-Valve, OHC	12-Valve, OHC
	Bore x Stroke		mm (in.)	100.0 x 95.0 (3.97 x 3.74)	100.0 x 95.0 (3.97 x 3.74)	94.0 x 100.0 (3.70 x 3.94)	94.0 x 100.0 (3.70 x 3.94)
	Displacement		cm^3 (cu.in.)	4477 (573.1)	4477 (573.1)	4164 (254.0)	4164 (254.0)
	Compression Ratio			9.0 : 1	9.0 : 1	22.4 : 1	22.4 : 1
	Fuel System			EFI	EFI	Distributor Type	Distributor Type
	Research Octane No. or Cetane No. (Diesel)			91or higer	91or higer	48 or higer	48 or higer
	Max. Output		kW / rpm	155 / 4600 (SAE-NET)	155 / 4600 (SAE-NET)	96 / 3800 (SAE-NET)	96 / 3800 (SAE-NET)
	Max. Torque		N·m / rpm	373 / 3600 (SAE-NET)	373 / 3600 (SAE-NET)	285 / 2200 (SAE-NET)	285 / 2200 (SAE-NET)
Engine Electrical	Battery Capacity (5HR)		Voltage & Amp. hr.	12-55	12-55	12-55	12-55
	Alternator Output		Watts	960	960	1320	1320
	Starter Output		kW	1.4	1.4	2.5	2.5
Chassis	Clutch Type			Dry, Single Plate Diaphragm	Dry, Single Plate Diaphragm	Dry, Single Plate Diaphragm	Dry, Single Plate Diaphragm
	Transmission Type			H150F	H150F	R151F	R151F
	Transmission Gear Ratio	In First		4.529	4.529	4.313	4.313
		In Second		2.464	2.464	2.330	2.330
		In Third		1.490	1.490	1.436	1.436
		In Fourth		1.000	1.000	1.000	1.000
		In Fifth		0.881	0.881	0.838	0.838
		In Reverse		4.313	4.313	4.220	4.220
	Transfer Gear Ratio H4 / L4			1.000 / 2.488	1.000 / 2.488	1.000 / 2.295	1.000 / 2.295
	Differential Gear Ratio (Front / Rear)			4.100 / 4.100	4.300 / 4.300	4.300 / 4.300	4.300 / 4.300
	Differential Gear Size (Front / Rear)		in.	8" / 9.5"	8" / 9.5"	8" / 9.5"	8" / 9.5"
	Brake Type	Front		Ventilated Disc	Ventilated Disc	Ventilated Disc	Ventilated Disc
		Rear		L. T Drum, Ventilated Disc*5	L. T Drum, Ventilated Disc*5	L. T Drum, Ventilated Disc*5	L. T Drum, Ventilated Disc*5
	Parking Brake Type			Drum	Drum	Drum	Drum
	Brake Booster Type and Size		in.	Tandem, 8.5" + 8.5"	Tandem, 8.5" + 8.5"	Single, 9"	Single, 9"
	Proportioning Valve Type			LSP & BV	LSP & BV	LSP & BV	LSP & BV
	Suspension Type	Front		Coil, Rigid	Coil, Rigid	Coil, Rigid	Coil, Rigid
		Rear		Leaf, Rigid	Leaf, Rigid	Leaf, Rigid	Leaf, Rigid
	Stabilizer Bar	Front		Standard	Standard	Standard	Standard
		Rear		Standard	—	Standard	—
	Steering Gear Type			Recirculating Ball	Recirculating Ball	Recirculating Ball	Recirculating Ball
	Steering Gear Ratio (Overall)			—	—	—	—
	Power Steering Type			Integral Type	Integral Type	Integral Type	Integral Type

*1 : With 265 / 70R16 Tires (Width) +100, (Height) -25, (Front / Rear Tread) +40
*2 : With Grille Guard +65
*3 : With Electric Winch +190
*4 : With Smorkel Type Air Cleaner (Width) +20, (Height) +30
*5 : Option
*6 : Transfer in Low
*7 : Transfer in High

	Australia				G.C.C. Countries	
	Steel Roof Van		Single Cab Pick-Up		Steel Roof Van	FRP Roof Van
	Standard	LX	Standard	LX	Standard	LX
	HDJ78R-RJMRZQ	HDJ78R-RJMNZQ	HDJ79R-TJMRZQ3	HDJ79R-TJMNZQ3	FZJ71L-RJMRKV	FZJ74L-FJMNKV
5	5060 (199.2), 4980 (196.1)*5	5060 (199.2), 4980 (196.1)*5	5075 (199.8)	5075 (199.8)	4070 (160.2)*1, *2, *3	4360 (171.7)*1, *2, *3
	1690 (66.5)*4	1690 (66.5)*4	1690 (66.5)*4	1690 (66.5)*1, *4	1690 (66.5)*1, *4	1690 (66.5)*1, *4
	2115 (83.3)*4	2115 (83.3)*4	1970 (77.6)*4	1970 (77.6)*1, *4	1935 (76.2)*1, *4	1980 (78.0)*1, *4
	2980 (117.3)	2980 (117.3)	3180 (125.2)	3180 (125.2)	2310 (90.9)	2600 (102.4)
	1435 (56.5)	1435 (56.5)	1435 (56.5)	1435 (56.5)*7	1435 (56.5)*7	1435 (56.5)*7
10	1420 (55.9)	1420 (55.9)	1420 (55.9)	1420 (55.9)*7	1420 (55.9)*7	1420 (55.9)*7
	—	—	—	—	—	—
	—	—	—	—	—	—
	—	—	—	—	—	—
	—	—	—	—	—	—
15	—	—	—	—	—	—
	—	—	—	—	—	—
	—	—	—	—	—	—
	—	—	—	—	—	—
	—	—	—	—	—	—
20	—	—	—	—	—	—
	—	—	—	—	—	—
	1175 - 1195 (2590 - 2635)	1175 - 1190 (2590 - 2623)	1225 - 1265 (2701 - 2789)	1215 - 1265 (2679 - 2789)	940 - 1105 (2072 - 2436)	1005 - 1165 (2216 - 2568)
	1035 - 1140 (2282 - 2513)	1100 - 1150 (2425 - 2535)	745 - 785 (1642 - 1731)	735 - 785 (1620 - 1731)	885 - 970 (1951 - 2138)	905 - 950 (1995 - 2094)
	2210 - 2335 (4872 - 5148)	2275 - 2340 (5016 - 5159)	1970 - 2050 (4343 - 4519)	1950 - 2050 (4299 - 4519)	1825 - 2075 (4023 - 4575)	1920 - 2115 (4233 - 4663)
25	1400 (3086)	1400 (3086)	1450 (3197)	1450 (3197)	1150 (2535)	1250 (2756)
	1900 (4189)	1900 (4189)	1850 (4079)	1850 (4079)	1450 (3197)	1350 (2976)
	3300 (7275)	3300 (7275)	3300 (7275)	3300 (7275)	2600 (5732)	2600 (5732)
	90 + 90 (19.8 + 19.8)	90 + 90 (19.8 + 19.8)	90 + 90 (19.8 + 19.8), 90 (19.8)*5	90 + 90 (19.8 + 19.8), 90 (19.8)*5	90 (19.8)	90 (19.8)
	—	—	—	—	—	—
30	155 (96)	155 (96)	155 (96)	155 (96)	165 (102)	165 (102)
	13 (8)*6, 32 (20)*7	13 (8)*6, 32 (20)*7	13 (8)*6, 32 (20)*7	13 (8)*6, 32 (20)*7	16 (10)*6, 39 (24)*7	16 (10)*6, 39 (24)*7
	23 (14)*6, 58 (36)*7	23 (14)*6, 58 (36)*7	23 (14)*6, 58 (36)*7	23 (14)*6, 58 (36)*7	28 (18)*6, 71 (44)*7	28 (18)*6, 71 (44)*7
	38 (24)*6, 96 (60)*7	38 (24)*6, 96 (60)*7	38 (24)*6, 96 (60)*7	38 (24)*6, 96 (60)*7	47 (29)*6, 118 (73)*7	47 (29)*6, 118 (73)*7
	—	—	—	—	—	—
35	—	—	—	—	—	—
	—	—	—	—	—	—
	1HD-FTE	1HD-FTE	1HD-FTE	1HD-FTE	1FZ-FE	1FZ-FE
	24-Valve, OHC	24-Valve, OHC	24-Valve, OHC	24-Valve, OHC	24-Valve, DOHC	24-Valve, DOHC
	94.0 x 100.0 (3.70 x 3.94)	94.0 x 100.0 (3.70 x 3.94)	94.0 x 100.0 (3.70 x 3.94)	94.0 x 100.0 (3.70 x 3.94)	100.0 x 95.0 (3.97 x 3.74)	100.0 x 95.0 (3.97 x 3.74)
40	4164 (254.0)	4164 (254.0)	4164 (254.0)	4164 (254.0)	4477 (573.1)	4477 (573.1)
	18.5 : 1	18.5 : 1	18.5 : 1	18.5 : 1	9.0 : 1	9.0 : 1
	Distributor Type	Distributor Type	Distributor Type	Distributor Type	EFI	EFI
	48 or higher	48 or higher	48 or higher	48 or higher	91 or higher	91 or higher
	(SAE-NET)	(SAE-NET)	(SAE-NET)	(SAE-NET)	179/4600 (SAE-NET)	179/4600 (SAE-NET)
45	(SAE-NET)	(SAE-NET)	(SAE-NET)	(SAE-NET)	407/3600 (SAE-NET)	407/3600 (SAE-NET)
	12-64	12-64	12-64	12-64	12-55	12-55
	1320	1320	1320	1320	840, 960*9	840, 960*9
	3.0	3.0	3.0	3.0	1.4	1.4
	Dry, Single Plate Diaphragm	Dry, Single Plate Diaphragm	Dry, Single Plate Diaphragm	Dry, Single Plate Diaphragm	Dry, Single Plate Diaphragm	Dry, Single Plate Diaphragm
50	H150F	H150F	H150F	H150F	H151F	H151F
	4.529	4.529	4.529	4.529	4.081	4.081
	2.464	2.464	2.464	2.464	2.294	2.294
	1.490	1.490	1.490	1.490	1.490	1.490
	1.000	1.000	1.000	1.000	1.000	1.000
55	0.881	0.881	0.881	0.881	0.881	0.881
	4.313	4.313	4.313	4.313	4.313	4.313
	1.000/2.488	1.000/2.488	1.000/2.488	1.000/2.488	1.000/2.488	1.000/2.488
	4.100/4.100	4.100/4.100	4.100/4.100	4.100/4.100	4.100/4.100	4.100/4.100
	8”/9.5”	8”/9.5”	8”/9.5”	8”/9.5”	8”/9.5”	8”/9.5”
60	Ventilated Disc	Ventilated Disc	Ventilated Disc	Ventilated Disc	Ventilated Disc	Ventilated Disc
	L. T Drum, Ventilated Disc*5	L. T Drum, Ventilated Disc*5	L. T Drum, Ventilated Disc*5	L. T Drum, Ventilated Disc*5	L. T Drum	L. T Drum
	Drum	Drum	Drum	Drum	Drum	Drum
	Single, 9”	Single, 9”	Single, 9”	Single, 9”	Tandem, 8.5” + 8.5”	Tandem, 8.5” + 8.5”
	LSP & BV	LSP & BV	LSP & BV	LSP & BV	LSP & BV	LSP & BV
65	Coil, Rigid	Coil, Rigid	Coil, Rigid	Coil, Rigid	Coil, Rigid	Coil, Rigid
	Leaf, Rigid	Leaf, Rigid	Leaf, Rigid	Leaf, Rigid	Leaf, Rigid	Leaf, Rigid
	Standard	Standard	Standard	Standard	Standard	Standard
	Standard	Standard	—	—	—	—
	Recirculating Ball	Recirculating Ball	Recirculating Ball	Recirculating Ball	Recirculating Ball	Recirculating Ball
70	—	—	—	—	—	—
	Integral Type	Integral Type	Integral Type	Integral Type	Integral Type	Integral Type

Item \ Area				G.C.C. Countries			
Body Type				Rag Roof Van	Steel Roof Van	Single Cab Pick-Up	
Vehicle Grade				Standard			LX
Model Code				FZJ74L-KJMRKV	FZJ78L-RJMRKV	FZJ79L-TJMRKV	FZJ79L-TJMNKV
Major Dimensions & Vehicle Weights	Overall	Length	mm (in.)	4360 (171.7)*1, *2, *3	4980 (196.1)*2, *3, *7	5275 (207.7)*2, *3, *4	5275 (207.7)*2, *3, *4
		Width	mm (in.)	1690 (66.5)*1, *5	1690 (66.5)*5	1690 (66.5)*5	1690 (66.5)*1, *5
		Height	mm (in.)	1950 (76.8)*1, *5	2115 (83.3)*5	1970 (77.6)*5	1970 (77.6)*1, *5
	Wheel Base		mm (in.)	2600 (102.4)	2980 (117.3)	3180 (125.2)	3180 (125.2)
	Tread	Front	mm (in.)	1435 (56.5)*2	1435 (56.5)	1435 (56.5)	1435 (56.5)*2
		Rear	mm (in.)	1420 (55.9)*2	1420 (55.9)	1420 (55.9)	1420 (55.9)*2
	Room	Length	mm (in.)	—	—	—	—
		Width	mm (in.)	—	—	—	—
		Height	mm (in.)	—	—	—	—
	Cargo Space	Length	mm (in.)	—	—	—	—
		Width	mm (in.)	—	—	—	—
		Height	mm (in.)	—	—	—	—
	Overhang	Front	mm (in.)	—	—	—	—
		Rear	mm (in.)	—	—	—	—
	Min. Running Ground Clearance		mm (in.)	—	—	—	—
	Angle of Approach		degrees	—	—	—	—
	Angle of Departure		degrees	—	—	—	—
	Curb Weight	Front	kg (lb)	985 - 1145 (2172 - 2524)	1095 - 1245 (2414 - 2745)	1115 - 1265 (2458 - 2789)	1120 - 1270 (2469 - 2800)
		Rear	kg (lb)	870 - 915 (1918 - 2017)	1005 - 1125 (2216 - 2480)	920 - 1090 (2028 - 2403)	925 - 1095 (2039 - 2414)
		Total	kg (lb)	1855 - 2060 (4090 - 4542)	2100 - 2370 (4630 - 5225)	2035 - 2355 (4486 - 5192)	2045 - 2365 (4508 - 5214)
	Gross Vehicle Weight	Front	kg (lb)	1250 (2756)	1375 (3031)	1375 (3031)	1375 (3031)
		Rear	kg (lb)	1350 (2976)	1825 (4023)	1825 (4023)	1825 (4023)
		Total	kg (lb)	2600 (5732)	3200 (7055)	3200 (7055)	3200 (7055)
	Fuel Tank Capacity		ℓ(Imp.gal.)	90 (19.8)	90 (19.8), 90 + 90 (19.8 + 19.8)*6	90 (19.8), 90 + 90 (19.8 + 19.8)*6	90 (19.8), 90 + 90 (19.8 + 19.8)*6
	Luggage Compartment Capacity		m^3 (cu.ft.)	—	—	—	—
Performance	Max. Speed		km / h (mph)	165 (102)	165 (102)	165 (102)	165 (102)
	Max. Permissible Speed	1st Gear	km / h (mph)	16 (10)*8, 39 (24)*9	16 (10)*8, 39 (24)*9	16 (10)*8, 39 (24)*9	16 (10)*8, 39 (24)*9
		2nd Gear	km / h (mph)	29 (18)*8, 71 (44)*9	29 (18)*8, 71 (44)*9	29 (18)*8, 71 (44)*9	29 (18)*8, 71 (44)*9
		3rd Gear	km / h (mph)	47 (29)*8, 118 (73)*9	47 (29)*8, 118 (73)*9	47 (29)*8, 118 (73)*9	47 (29)*8, 118 (73)*9
		4th Gear	km / h (mph)	—	—	—	—
	Min. Turning Radius	Tire	m (ft.)	—	—	—	—
		Body	m (ft.)	—	—	—	—
Engine	Engine Type			1FZ-FE	1FZ-FE	1FZ-FE	1FZ-FE
	Valve Mechanism			24-Valve, DOHC	24-Valve, DOHC	24-Valve, DOHC	24-Valve, DOHC
	Bore x Stroke		mm (in.)	100.0 x 95.0 (3.97 x 3.74)	100.0 x 95.0 (3.97 x 3.74)	100.0 x 95.0 (3.97 x 3.74)	100.0 x 95.0 (3.97 x 3.74)
	Displacement		cm^3 (cu.in.)	4477 (573.1)	4477 (573.1)	4477 (573.1)	4477 (573.1)
	Compression Ratio			9.0 : 1	9.0 : 1	9.0 : 1	9.0 : 1
	Fuel System			EFI	EFI	EFI	EFI
	Research Octane No. or Cetane No. (Diesel)			91 or higher	91 or higher	91 or higher	91 or higher
	Max. Output		kW / rpm	179 / 4600 (SAE-NET)	179 / 4600 (SAE-NET)	179 / 4600 (SAE-NET)	179 / 4600 (SAE-NET)
	Max. Torque		N·m / rpm	407 / 3600 (SAE-NET)	407 / 3600 (SAE-NET)	407 / 3600 (SAE-NET)	407 / 3600 (SAE-NET)
Engine Electrical	Battery Capacity (5HR)		Voltage & Amp. hr.	12-55	12-55	12-55	12-55
	Alternator Output		Watts	840, 960*7	840, 960*7	840, 960*7	840, 960*7
	Starter Output		kW	1.4	1.4	1.4	1.4
Chassis	Clutch Type			Dry, Single Plate Diaphragm	Dry, Single Plate Diaphragm	Dry, Single Plate Diaphragm	Dry, Single Plate Diaphragm
	Transmission Type			H151F	H150F	H150F	H150F
	Transmission Gear Ratio	In First		4.081	4.529	4.529	4.529
		In Second		2.294	2.464	2.464	2.464
		In Third		1.490	1.490	1.490	1.490
		In Fourth		1.000	1.000	1.000	1.000
		In Fifth		0.881	0.881	0.881	0.881
		In Reverse		4.313	4.313	4.313	4.313
	Transfer Gear Ratio H4 / L4			1.000 / 2.488	1.000 / 2.488	1.000 / 2.488	1.000 / 2.488
	Differential Gear Ratio (Front / Rear)			4.100 / 4.100	4.100 / 4.100	4.300 / 4.300	4.300 / 4.300, 4.100 / 4.100*9
	Differential Gear Size (Front / Rear)		in.	8" / 9.5"	8" / 9.5"	8" / 9.5"	8" / 9.5"
	Brake Type	Front		Ventilated Disc	Ventilated Disc	Ventilated Disc	Ventilated Disc
		Rear		L. T Drum	L. T Drum	L. T Drum	L. T Drum
	Parking Brake Type			Drum	Drum	Drum	Drum
	Brake Booster Type and Size		in.	Tandem, 8.5" + 8.5"	Tandem, 8.5" + 8.5"	Tandem, 8.5" + 8.5"	Tandem, 8.5" + 8.5"
	Proportioning Valve Type			LSP & BV	LSP & BV	LSP & BV	LSP & BV
	Suspension Type	Front		Coil, Rigid	Coil, Rigid	Coil, Rigid	Coil, Rigid
		Rear		Leaf, Rigid	Leaf, Rigid	Leaf, Rigid	Leaf, Rigid
	Stabilizer Bar	Front		Standard	Standard	Standard	Standard
		Rear		—	Standard	Option	Option
	Steering Gear Type			Recirculating Ball	Recirculating Ball	Recirculating Ball	Recirculating Ball
	Steering Gear Ratio (Overall)			—	—	—	—
	Power Steering Type			Integral Type	Integral Type	Integral Type	Integral Type

*1 : With 265 / 70R16 Tires (Width) +100, (Height) -25, (Front / Rear Tread) +40
*2 : With Grille Guard +65
*3 : With Electric Winch +190
*4 : With Rear Bumper +110
*5 : With Smorkel Type Air Cleaner (Width) +20, (Height) +30
*6 : With Roof Rack (Width) +30, (Height) +215
*7 : Option
*8 : Transfer in Low
*9 : Transfer in High

G.C.C. Countries	General Countries				
Single Cab Pick-Up	Steel Roof Van			FRP Roof Van	Rag Roof Van
	Standard		LX		Standard
HZJ79L-TJMRSV	FZJ71R-RJMRK	FZJ71L-RJMRK	FZJ71L-RJMNK	FZJ74L-FJMNK	FZJ74L-KJMRK
5275 (207.7)*2, *3, *4	4070 (160.2)*1, *2, *3	4070 (160.2)*1, *2, *3	4070 (160.2)*1, *2, *3	4360 (171.7)*1, *2, *3	4360 (171.7)*1, *2, *3
1690 (66.5)*5	1690 (66.5)*1, *5, *6	1690 (66.5)*1, *5, *6	1690 (66.5)*1, *5, *6	1690 (66.5)*1, *5	1690 (66.5)*1, *5
1970 (77.6)*5	1935 (76.2)*1, *5, *6	1935 (76.2)*1, *5, *6	1935 (76.2)*1, *5, *6	1980 (78.0)*1, *5	1980 (78.0)*1, *5
3180 (125.2)	2310 (90.9)	2310 (90.9)	2310 (90.9)	2600 (102.4)	2600 (102.4)
1435 (56.5)	1435 (56.5)*2	1435 (56.5)*2	1435 (56.5)*2	1435 (56.5)*1	1435 (56.5)*1
1420 (55.9)	1420 (55.9)*2	1420 (55.9)*2	1420 (55.9)*2	1420 (55.9)*1	1420 (55.9)*1
—	—	—	—	—	—
—	—	—	—	—	—
—	—	—	—	—	—
—	—	—	—	—	—
—	—	—	—	—	—
—	—	—	—	—	—
—	—	—	—	—	—
—	—	—	—	—	—
—	—	—	—	—	—
—	—	—	—	—	—
1180 - 1335 (2601 - 2943)	900 - 1105 (1984 - 2436)	900 - 1105 (1984 - 2436)	900 - 1120 (1984 - 2469)	950 - 1170 (2094 - 2579)	960 - 1160 (2116 - 2557)
995 - 1020 (2194 - 2249)	850 - 940 (1874 - 2072)	850 - 940 (1874 - 2072)	850 - 960 (1874 - 2116)	840 - 930 (1852 - 2050)	820 - 900 (1808 - 1984)
2175 - 2355 (4795 - 5192)	1750 - 2045 (3858 - 4508)	1750 - 2045 (3858 - 4508)	1750 - 2080 (3858 - 4586)	1790 - 2100 (3946 - 4630)	1780 - 2060 (3924 - 4542)
1450 (3197)	1150 (2535)	1150 (2535)	1150 (2535)	1250 (2756)	1250 (2756)
1750 (3858)	1450 (3197)	1450 (3197)	1450 (3197)	1350 (2976)	1350 (2976)
3200 (7055)	2600 (5732)	2600 (5732)	2600 (5732)	2600 (5732)	2600 (5732)
90 (19.8), 90 + 90 (19.8 + 19.8)*7	90 (19.8)	90 (19.8)	90 (19.8)	90 (19.8)	90 (19.8)
—	—	—	—	—	—
—	165 (102)	165 (102)	165 (102)	165 (102)	165 (102)
15 (10)*8, 34 (21)*9	16 (10)*8, 39 (24)*9	16 (10)*8, 39 (24)*9	16 (10)*8, 39 (24)*9	16 (10)*8, 39 (24)*9	16 (10)*8, 39 (24)*9
27 (17)*8, 63 (39)*9	29 (18)*8, 71 (44)*9	29 (18)*8, 71 (44)*9	29 (18)*8, 71 (44)*9	29 (18)*8, 71 (44)*9	29 (18)*8, 71 (44)*9
44 (27)*8, 102 (63)*9	47 (29)*8, 118 (73)*9	47 (29)*8, 118 (73)*9	47 (29)*8, 118 (73)*9	47 (29)*8, 118 (73)*9	47 (29)*8, 118 (73)*9
—	—	—	—	—	—
—	—	—	—	—	—
—	—	—	—	—	—
1HZ	1FZ-FE	1FZ-FE	1FZ-FE	1FZ-FE	1FZ-FE
12-Valve, OHC	24-Valve, DOHC	24-Valve, DOHC	24-Valve, DOHC	24-Valve, DOHC	24-Valve, DOHC
94.0 x 100.0 (3.70 x 3.94)	100.0 x 95.0 (3.97 x 3.74)	100.0 x 95.0 (3.97 x 3.74)	100.0 x 95.0 (3.97 x 3.74)	100.0 x 95.0 (3.97 x 3.74)	100.0 x 95.0 (3.97 x 3.74)
4164 (254.0)	4477 (573.1)	4477 (573.1)	4477 (573.1)	4477 (573.1)	4477 (573.1)
22.4 : 1	9.0 : 1	9.0 : 1	9.0 : 1	9.0 : 1	9.0 : 1
Distributor Type	EFI	EFI	EFI	EFI	EFI
48 or higher	91 or higher	91 or higher	91 or higher	91 or higher	91 or higher
96 / 3800 (SAE-NET)	165 / 4600 (SAE-NET)	165 / 4600 (SAE-NET)	165 / 4600 (SAE-NET)	165 / 4600 (SAE-NET)	165 / 4600 (SAE-NET)
285 / 2200 (SAE-NET)	387 / 3600 (SAE-NET)	387 / 3600 (SAE-NET)	387 / 3600 (SAE-NET)	387 / 3600 (SAE-NET)	387 / 3600 (SAE-NET)
12-55	12-55	12-55	12-55	12-55	12-55
960	840, 960*7	840, 960*7	840, 960*7	840, 960*7	840, 960*7
2.5	1.4, 2.0*7	1.4, 2.0*7	1.4, 2.0*7	1.4, 2.0*7	1.4, 2.0*7
Dry, Single Plate Diaphragm	Dry, Single Plate Diaphragm	Dry, Single Plate Diaphragm	Dry, Single Plate Diaphragm	Dry, Single Plate Diaphragm	Dry, Single Plate Diaphragm
R151F	H151F	H151F	H151F	H151F	H151F
4.313	4.081	4.081	4.081	4.081	4.081
2.330	2.294	2.294	2.294	2.294	2.294
1.436	1.490	1.490	1.490	1.490	1.490
1.000	1.000	1.000	1.000	1.000	1.000
0.838	0.881	0.881	0.881	0.881	0.881
4.220	4.313	4.313	4.313	4.313	4.313
1.000 / 2.295	1.000 / 2.488	1.000 / 2.488	1.000 / 2.488	1.000 / 2.488	1.000 / 2.488
4.300 / 4.300	4.100 / 4.100	4.100 / 4.100, 4.111 / 4.111*9	4.100 / 4.100, 4.111 / 4.111*9	4.100 / 4.100	4.100 / 4.100, 4.111 / 4.111*12
8” / 9.5”	8” / 9.5”	8” / 9.5”	8” / 9.5”	8” / 9.5”	8” / 9.5”
Ventilated Disc	Ventilated Disc	Ventilated Disc	Ventilated Disc	Ventilated Disc	Ventilated Disc
L. T Drum	L. T Drum	L. T Drum	L. T Drum	L. T Drum	L. T Drum
Drum	Drum	Drum	Drum	Drum	Drum
Single, 9”	Tandem, 8.5” + 8.5”	Tandem, 8.5” + 8.5”	Tandem, 8.5” + 8.5”	Tandem, 8.5” + 8.5”	Tandem, 8.5” + 8.5”
LSP & BV	LSP & BV	LSP & BV	LSP & BV	LSP & BV	LSP & BV
Coil, Rigid	Coil, Rigid	Coil, Rigid	Coil, Rigid	Coil, Rigid	Coil, Rigid
Leaf, Rigid	Leaf, Rigid	Leaf, Rigid	Leaf, Rigid	Leaf, Rigid	Leaf, Rigid
Standard	Standard	Standard	Standard	Standard	Standard
Option	—	—	—	—	—
Recirculating Ball	Recirculating Ball	Recirculating Ball	Recirculating Ball	Recirculating Ball	Recirculating Ball
—	—	—	—	—	—
Integral Type	Integral Type	Integral Type	Integral Type	Integral Type	Integral Type

Item \ Area				General Countries			
Body Type				Steel Roof Van		Single Cab Pick-Up	
Vehicle Grade				Standard			
Model Code				FZJ78R-RJMRK	FZJ78L-RJMRK	FZJ79R-TJMRK	FZJ79L-TJMRK
Major Dimensions & Vehicle Weights	Overall	Length	mm (in.)	4980 (196.1)*1, *2, *4	4980 (196.1)*1, *2, *7	5085 (200.2)*1, *2, *3	5085 (200.2)*1, *2, *3
		Width	mm (in.)	1690 (66.5)*5, *6	1690 (66.5)*5, *6	1690 (66.5)*5	1690 (66.5)*5
		Height	mm (in.)	2115 (83.3)*5, *6	2115 (83.3)*5, *6	1970 (77.6)*5	1970 (77.6)*5
	Wheel Base		mm (in.)	2980 (117.3)	2980 (117.3)	3180 (125.2)	3180 (125.2)
	Tread	Front	mm (in.)	1435 (56.5)	1435 (56.5)	1435 (56.5)	1435 (56.5)
		Rear	mm (in.)	1420 (55.9)	1420 (55.9)	1420 (55.9)	1420 (55.9)
	Room	Length	mm (in.)	—	—	—	—
		Width	mm (in.)	—	—	—	—
		Height	mm (in.)	—	—	—	—
	Cargo Space	Length	mm (in.)	—	—	—	—
		Width	mm (in.)	—	—	—	—
		Height	mm (in.)	—	—	—	—
	Overhang	Front	mm (in.)	—	—	—	—
		Rear	mm (in.)	—	—	—	—
	Min. Running Ground Clearance		mm (in.)	—	—	—	—
	Angle of Approach		degrees	—	—	—	—
	Angle of Departure		degrees	—	—	—	—
	Curb Weight	Front	kg (lb)	1050 - 1210 (2315 - 2668)	1050 - 1210 (2315 - 2668)	1090 - 1230 (2403 - 2712)	1090 - 1230 (2403 - 2712)
		Rear	kg (lb)	960 - 1190 (2116 - 2623)	960 - 1190 (2116 - 2623)	840 - 1035 (1852 - 2282)	840 - 1035 (1852 - 2282)
		Total	kg (lb)	2010 - 2400 (4431 - 5291)	2010 - 2400 (4431 - 5291)	1930 - 2265 (4255 - 4993)	1930 - 2265 (4255 - 4993)
	Gross Vehicle Weight	Front	kg (lb)	1375 (3031)	1375 (3031)	1375 (3031)	1375 (3031)
		Rear	kg (lb)	1825 (4023)	1825 (4023)	1825 (4023)	1825 (4023)
		Total	kg (lb)	3200 (7055)	3200 (7055)	3200 (7055)	3200 (7055)
	Fuel Tank Capacity		ℓ(Imp.gal.)	90 (19.8), 90 + 90 (19.8 + 19.8)*7	90 (19.8), 90 + 90 (19.8 + 19.8)*7	90 (19.8), 90 + 90 (19.8 + 19.8)*7	90 (19.8), 90 + 90 (19.8 + 19.8)*7
	Luggage Compartment Capacity		m^3 (cu.ft.)	—	—	—	—
Performance	Max. Speed		km / h (mph)	165 (102)	165 (102)	165 (102)	165 (102)
	Max. Permissible Speed	1st Gear	km / h (mph)	16 (10)*8, 39 (24)*9	16 (10)*8, 39 (24)*9	16 (10)*8, 39 (24)*9	16 (10)*8, 39 (24)*9
		2nd Gear	km / h (mph)	29 (18)*8, 71 (44)*9	29 (18)*8, 71 (44)*9	29 (18)*8, 71 (44)*9	29 (18)*8, 71 (44)*9
		3rd Gear	km / h (mph)	47 (29)*8, 118 (73)*9	47 (29)*8, 118 (73)*9	47 (29)*8, 118 (73)*9	47 (29)*8, 118 (73)*9
		4th Gear	km / h (mph)	—	—	—	—
	Min. Turning Radius	Tire	m (ft.)	—	—	—	—
		Body	m (ft.)	—	—	—	—
Engine	Engine Type			1FZ-FE	1FZ-FE	1FZ-FE	1FZ-FE
	Valve Mechanism			24-Valve, DOHC	24-Valve, DOHC	24-Valve, DOHC	24-Valve, DOHC
	Bore x Stroke		mm (in.)	100.0 x 95.0 (3.97 x 3.74)	100.0 x 95.0 (3.97 x 3.74)	100.0 x 95.0 (3.97 x 3.74)	100.0 x 95.0 (3.97 x 3.74)
	Displacement		cm^3 (cu.in.)	4477 (573.1)	4477 (573.1)	4477 (573.1)	4477 (573.1)
	Compression Ratio			9.0 : 1	9.0 : 1	9.0 : 1	9.0 : 1
	Fuel System			EFI	EFI	EFI	EFI
	Research Octane No. or Cetane No. (Diesel)			91 or higher	91 or higher	91 or higher	91 or higher
	Max. Output		kW / rpm	165 / 4600 (SAE-NET)	165 / 4600 (SAE-NET)	165 / 4600 (SAE-NET)	165 / 4600 (SAE-NET)
	Max. Torque		N·m / rpm	387 / 3600 (SAE-NET)	387 / 3600 (SAE-NET)	387 / 3600 (SAE-NET)	387 / 3600 (SAE-NET)
Engine Electrical	Battery Capacity (5HR)		Voltage & Amp. hr.	12-55	12-55	12-55	12-55
	Alternator Output		Watts	840, 960*7	840, 960*7	840, 960*7	840, 960*7
	Starter Output		kW	1.4, 2.0*7	1.4, 2.0*7	1.4, 2.0*7	1.4, 2.0*7
Chassis	Clutch Type			Dry, Single Plate Diaphragm	Dry, Single Plate Diaphragm	Dry, Single Plate Diaphragm	Dry, Single Plate Diaphragm
	Transmission Type			H150F	H150F	H150F	H150F
	Transmission Gear Ratio	In First		4.529	4.529	4.529	4.529
		In Second		2.464	2.464	2.464	2.464
		In Third		1.490	1.490	1.490	1.490
		In Fourth		1.000	1.000	1.000	1.000
		In Fifth		0.881	0.881	0.881	0.881
		In Reverse		4.313	4.313	4.313	4.313
	Transfer Gear Ratio H4 / L4			1.000 / 2.488	1.000 / 2.488	1.000 / 2.488	1.000 / 2.488
	Differential Gear Ratio (Front / Rear)			4.100 / 4.100	4.100 / 4.100, 4.111 / 4.111*10	4.300 / 4.300	4.300 / 4.300
	Differential Gear Size (Front / Rear)		in.	8" / 9.5"	8" / 9.5"	8" / 9.5"	8" / 9.5"
	Brake Type	Front		Ventilated Disc	Ventilated Disc	Ventilated Disc	Ventilated Disc
		Rear		L. T Drum	L. T Drum	L. T Drum	L. T Drum
	Parking Brake Type			Drum	Drum	Drum	Drum
	Brake Booster Type and Size		in.	Tandem, 8.5" + 8.5"	Tandem, 8.5" + 8.5"	Tandem, 8.5" + 8.5"	Tandem, 8.5" + 8.5"
	Proportioning Valve Type			LSP & BV	LSP & BV	LSP & BV	LSP & BV
	Suspension Type	Front		Coil, Rigid	Coil, Rigid	Coil, Rigid	Coil, Rigid
		Rear		Leaf, Rigid	Leaf, Rigid	Leaf, Rigid	Leaf, Rigid
	Stabilizer Bar	Front		Standard	Standard	Standard	Standard
		Rear		Standard	Standard	Option	Option
	Steering Gear Type			Recirculating Ball	Recirculating Ball	Recirculating Ball	Recirculating Ball
	Steering Gear Ratio (Overall)			—	—	—	—
	Power Steering Type			Integral Type	Integral Type	Integral Type	Integral Type

*1 : With Grille Guard +65
*2 : With Electric Winch +190
*3 : With Rear Bumper +110
*4 : With Back door-Mounted Spare Tire +80
*5 : With Smorkel Type Air Cleaner (Width) +20, (Height) +30
*6 : With Roof Rack (Width) +30, (Height) +215
*7 : Option
*8 : Transfer in Low
*9 : Transfer in High
*10 : CKD Package

General Countries					
Single Cab Pick-Up	Steel Roof Van		Single Cab Pick-Up		
Standard					
FZJ79L-TJMRK3	HZJ78R-RJMRS	HZJ78L-RJMRS	HZJ79R-TJMRS	HZJ79L-TJMRS	HZJ79L-TJMRS3
5085 (200.2)*1, *2	4980 (196.1)*1, *2, *4	4980 (196.1)*1, *2, *4	5085 (200.2)*1, *2, *3	5085 (200.2)*1, *2, *3	5085 (200.2)*1, *2
1690 (66.5)*5	1690 (66.5)*5, *6	1690 (66.5)*5, *6	1690 (66.5)*5	1690 (66.5)*5	1690 (66.5)*5
1970 (77.6)*5	2115 (83.3)*5, *6	2115 (83.3)*5, *6	1970 (77.6)*5	1970 (77.6)*5	1970 (77.6)*5
3180 (125.2)	2980 (117.3)	2980 (117.3)	3180 (125.2)	3180 (125.2)	3180 (125.2)
1435 (56.5)	1435 (56.5)	1435 (56.5)	1435 (56.5)	1435 (56.5)	1435 (56.5)
1420 (55.9)	1420 (55.9)	1420 (55.9)	1420 (55.9)	1420 (55.9)	1420 (55.9)
—	—	—	—	—	—
—	—	—	—	—	—
—	—	—	—	—	—
—	—	—	—	—	—
—	—	—	—	—	—
—	—	—	—	—	—
—	—	—	—	—	—
—	—	—	—	—	—
—	—	—	—	—	—
—	—	—	—	—	—
1095 - 1225 (2414 - 2701)	1065 - 1250 (2348 - 2756)	1065 - 1250 (2348 - 2756)	1135 - 1275 (2502 - 2811)	1135 - 1275 (2502 - 2811)	1135 - 1270 (2502 - 2800)
685 - 845 (1510 - 1863)	995 - 1265 (2194 - 2789)	995 - 1265 (2194 - 2789)	905 - 1100 (1995 - 2425)	905 - 1100 (1995 - 2425)	760 - 935 (1676 - 2061)
1780 - 2070 (3924 - 4564)	2060 - 2515 (4542 - 5545)	2060 - 2515 (4542 - 5545)	2040 - 2375 (4497 - 5236)	2040 - 2375 (4497 - 5236)	1895 - 2205 (4178 - 4861)
1375 (3031)	1375 (3031)	1375 (3031)	1400 (3086)	1400 (3086)	1400 (3086)
1825 (4023)	1825 (4023)	1825 (4023)	1800 (3968)	1800 (3968)	1800 (3968)
3200 (7055)	3200 (7055)	3200 (7055)	3200 (7055)	3200 (7055)	3200 (7055)
90 (19.8), 90 + 90 (19.8 + 19.8)*7	90 (19.8), 90 + 90 (19.8 + 19.8)*7	90 (19.8), 90 + 90 (19.8 + 19.8)*7	90 (19.8), 90 + 90 (19.8 + 19.8)*7	90 (19.8), 90 + 90 (19.8 + 19.8)*7	90 (19.8), 90 + 90 (19.8 + 19.8)*7
—	—	—	—	—	—
165 (103)	140 (87.5)	140 (87.5)	140 (87.5)	140 (87.5)	140 (87.5)
16 (10)*8, 39 (24)*9	15 (10)*8, 34 (21)*9	15 (10)*8, 34 (21)*9	15 (10)*8, 34 (21)*9	15 (10)*8, 34 (21)*9	15 (10)*8, 34 (21)*9
29 (18)*8, 71 (44)*9	27 (17)*8, 63 (39)*9	27 (17)*8, 63 (39)*9	27 (17)*8, 63 (39)*9	27 (17)*8, 63 (39)*9	27 (17)*8, 63 (39)*9
47 (29)*8, 118 (73)*9	44 (27)*8, 102 (63)*9	44 (27)*8, 102 (63)*9	44 (27)*8, 102 (63)*9	44 (27)*8, 102 (63)*9	44 (27)*8, 102 (63)*9
—	—	—	—	—	—
—	—	—	—	—	—
—	—	—	—	—	—
1FZ-FE	1HZ	1HZ	1HZ	1HZ	1HZ
24-Valve, DOHC	12-Valve, OHC	12-Valve, OHC	12-Valve, OHC	12-Valve, OHC	12-Valve, OHC
100.0 x 95.0 (3.97 x 3.74)	94.0 x 100.0 (3.70 x 3.94)	94.0 x 100.0 (3.70 x 3.94)	94.0 x 100.0 (3.70 x 3.94)	94.0 x 100.0 (3.70 x 3.94)	94.0 x 100.0 (3.70 x 3.94)
4477 (573.1)	4164 (254.0)	4164 (254.0)	4164 (254.0)	4164 (254.0)	4164 (254.0)
9.0 : 1	22.4 : 1	22.4 : 1	22.4 : 1	22.4 : 1	22.4 : 1
EFI	Distributor Type	Distributor Type	Distributor Type	Distributor Type	Distributor Type
91 or higher	48 or higher	48 or higher	48 or higher	48 or higher	48 or higher
165/4600 (SAE-NET)	96/3800 (SAE-NET)	96/3800 (SAE-NET)	96/3800 (SAE-NET)	96/3800 (SAE-NET)	96/3800 (SAE-NET)
387/3600 (SAE-NET)	285/2200 (SAE-NET)	285/2200 (SAE-NET)	285/2200 (SAE-NET)	285/2200 (SAE-NET)	285/2200 (SAE-NET)
12-55	12-55	12-55	12-55	12-55	12-55
840, 960*9	960	960	960	960	960
1.4, 2.0*9	2.5	2.5	2.5	2.5	2.5
Dry, Single Plate Diaphragm	Dry, Single Plate Diaphragm	Dry, Single Plate Diaphragm	Dry, Single Plate Diaphragm	Dry, Single Plate Diaphragm	Dry, Single Plate Diaphragm
H150F	R151F	R151F	R151F	R151F	R151F
4.529	4.313	4.313	4.313	4.313	4.313
2.464	2.330	2.330	2.330	2.330	2.330
1.490	1.436	1.436	1.436	1.436	1.436
1.000	1.000	1.000	1.000	1.000	1.000
0.881	0.838	0.838	0.838	0.838	0.838
4.313	4.220	4.220	4.220	4.220	4.220
1.000/2.488	1.000/2.295	1.000/2.295	1.000/2.295	1.000/2.295	1.000/2.295
4.100/4.100, 4.111/4.111*12	4.300/4.300	4.300/4.300	4.300/4.300	4.300/4.300	4.300/4.300
8”/9.5”	8”/9.5”	8”/9.5”	8”/9.5”	8”/9.5”	8”/9.5”
Ventilated Disc	Ventilated Disc	Ventilated Disc	Ventilated Disc	Ventilated Disc	Ventilated Disc
L. T Drum	L. T Drum, Ventilated Disc*9	L. T Drum	L. T Drum	L. T Drum	L. T Drum
Drum	Drum	Drum	Drum	Drum	Drum
Tandem, 8.5” + 8.5”	Single, 9”	Single, 9”	Single, 9”	Single, 9”	Single, 9”
LSP & BV	LSP & BV	LSP & BV	LSP & BV	LSP & BV	LSP & BV
Coil, Rigid	Coil, Rigid	Coil, Rigid	Coil, Rigid	Coil, Rigid	Coil, Rigid
Leaf, Rigid	Leaf, Rigid	Leaf, Rigid	Leaf, Rigid	Leaf, Rigid	Leaf, Rigid
Standard	Standard	Standard	Standard	Standard	Standard
Option	Standard	Standard	Option	Option	Option
Recirculating Ball	Recirculating Ball	Recirculating Ball	Recirculating Ball	Recirculating Ball	Recirculating Ball
—	—	—	—	—	—
Integral Type	Integral Type	Integral Type	Integral Type	Integral Type	Integral Type

Item \ Area				General Countries		
Body Type				Steel Roof Van		Rag Roof Van
Vehicle Grade				Standard		
Model Code				HZJ71R-RJMRS	HZJ71L-RJMRS	HZJ71R-KJMRS
Major Dimensions & Vehicle Weights	Overall	Length	mm (in.)	4070 (160.2)*1, *2	4070 (160.2)*1, *2	4070 (160.2)*1, *2
		Width	mm (in.)	1690 (66.5)*3, *4	1690 (66.5)*3, *4	1690 (66.5)*3
		Height	mm (in.)	1935 (76.2)*3, *4	1935 (76.2)*3, *4	1945 (76.6)*3
	Wheel Base		mm (in.)	2310 (90.9)	2310 (90.9)	2310 (90.9)
	Tread	Front	mm (in.)	1435 (56.5)	1435 (56.5)	1435 (56.5)
		Rear	mm (in.)	1420 (55.9)	1420 (55.9)	1420 (55.9)
	Room	Length	mm (in.)	—	—	—
		Width	mm (in.)	—	—	—
		Height	mm (in.)	—	—	—
	Cargo Space	Length	mm (in.)	—	—	—
		Width	mm (in.)	—	—	—
		Height	mm (in.)	—	—	—
	Overhang	Front	mm (in.)	—	—	—
		Rear	mm (in.)	—	—	—
	Min. Running Ground Clearance		mm (in.)	—	—	—
	Angle of Approach		degrees	—	—	—
	Angle of Departure		degrees	—	—	—
	Curb Weight	Front	kg (lb)	950-1140 (2094-2513)	950-1140 (2094-2513)	930-1150 (2050-2535)
		Rear	kg (lb)	890-975 (1962-2150)	890-975 (1962-2150)	870-935 (1918-2061)
		Total	kg (lb)	1840-2115 (4057-4663)	1840-2115 (4057-4663)	1800-2085 (3968-4597)
	Gross Vehicle Weight	Front	kg (lb)	1150 (2535)	1150 (2535)	1150 (2535)
		Rear	kg (lb)	1450 (3197)	1450 (3197)	1450 (3197)
		Total	kg (lb)	2600 (5732)	2600 (5732)	2600 (5732)
	Fuel Tank Capacity		ℓ(Imp.gal.)	90 (19.8)	90 (19.8)	90 (19.8)
	Luggage Compartment Capacity		m^3 (cu.ft.)	—	—	—
Performance	Max. Speed		km / h (mph)	150 (93.8)	150 (93.8)	150 (93.8)
	Max. Permissible Speed	1st Gear	km / h (mph)	15 (10)*5, 34 (21)*6	15 (10)*5, 34 (21)*6	15 (10)*5, 34 (21)*6
		2nd Gear	km / h (mph)	27 (17)*5, 63 (39)*6	27 (17)*5, 63 (39)*6	27 (17)*5, 63 (39)*6
		3rd Gear	km / h (mph)	44 (27)*5, 102 (63)*6	44 (27)*5, 102 (63)*6	44 (27)*5, 102 (63)*6
		4th Gear	km / h (mph)	—	—	—
	Min. Turning Radius	Tire	m (ft.)	—	—	—
		Body	m (ft.)	—	—	—
Engine	Engine Type			1HZ	1HZ	1HZ
	Valve Mechanism			12-Valve, OHC	12-Valve, OHC	12-Valve, OHC
	Bore x Stroke		mm (in.)	94.0 x 100.0 (3.70 x 3.94)	94.0 x 100.0 (3.70 x 3.94)	94.0 x 100.0 (3.70 x 3.94)
	Displacement		cm^3 (cu.in.)	4164 (254.0)	4164 (254.0)	4164 (254.0)
	Compression Ratio			22.4 : 1	22.4 : 1	22.4 : 1
	Fuel System			Distributor Type	Distributor Type	Distributor Type
	Research Octane No. or Cetane No. (Diesel)			48 or higher	48 or higher	48 or higher
	Max. Output		kW / rpm	96 / 3800 (SAE-NET)	96 / 3800 (SAE-NET)	96 / 3800 (SAE-NET)
	Max. Torque		N·m / rpm	285 / 2200 (SAE-NET)	285 / 2200 (SAE-NET)	285 / 2200 (SAE-NET)
Engine Electrical	Battery Capacity (5HR)		Voltage & Amp. hr.	12-55	12-55	12-55
	Alternator Output		Watts	960	960	960
	Starter Output		kW	2.5	2.5	2.5
Chassis	Clutch Type			Dry, Single Plate Diaphragm	Dry, Single Plate Diaphragm	Dry, Single Plate Diaphragm
	Transmission Type			R151F	R151F	R151F
	Transmission Gear Ratio	In First		4.313	4.313	4.313
		In Second		2.330	2.330	2.330
		In Third		1.436	1.436	1.436
		In Fourth		1.000	1.000	1.000
		In Fifth		0.838	0.838	0.838
		In Reverse		4.220	4.220	4.220
	Transfer Gear Ratio H4 / L4			1.000 / 2.295	1.000 / 2.295	1.000 / 2.295
	Differential Gear Ratio (Front / Rear)			4.300 / 4.300	4.300 / 4.300	4.300 / 4.300
	Differential Gear Size (Front / Rear)		in.	8”/9.5”	8”/9.5”	8”/9.5”
	Brake Type	Front		Ventilated Disc	Ventilated Disc	Ventilated Disc
		Rear		L. T Drum	L. T Drum	L. T Drum
	Parking Brake Type			Drum	Drum	Drum
	Brake Booster Type and Size		in.	Single, 9”	Single, 9”	Single, 9”
	Proportioning Valve Type			LSP & BV	LSP & BV	LSP & BV
	Suspension Type	Front		Coil, Rigid	Coil, Rigid	Coil, Rigid
		Rear		Leaf, Rigid	Leaf, Rigid	Leaf, Rigid
	Stabilizer Bar	Front		Standard	Standard	Standard
		Rear		—	—	—
	Steering Gear Type			Recirculating Ball	Recirculating Ball	Recirculating Ball
	Steering Gear Ratio (Overall)			—	—	—
	Power Steering Type			Integral Type	Integral Type	Integral Type

*1 : With Grille Guard +65
*2 : With Electric Winch +190
*3 : With Smorkel Type Air Cleaner (Width) +20, (Height) +30
*4 : With Roof Rack (Width) +30, (Height) +215
*5 : Transfer in Low
*6 : Transfer in High

HILUX

OUTLINE OF NEW FEATURES

The following changes are made for the new Hilux.

1. All Engines

The TOYOTA genuine Super Long Life Coolant (SLLC) has been adopted. As result, the maintenance interval has been extended.

2. 1RZ and 2RZ Engines

The starter of the 1RZ and 2RZ engine models for General Countries and the G.C.C. (Gulf Cooperation Council) countries has been changed from R1.0 kW to RA1.2 kW in order to improve startability.

3. 3RZ-FE Engine

To comply with the STEP2 exhaust emission requirements, a TWC (Three-Way Catalytic Converter) and an oxygen sensor have been added to the exhaust system of the 3RZ-FE engine model for Australia and New Zealand.

4. Manual Headlight Leveling System

A manual headlight leveling system has been newly provided as standard equipment on all models for Saudi Arabia. For detail, see page 320.

MODEL CODE

KDN165 L – T R M D Y W 3

1 2 3 4 5 6 7 8 9

1

BASIC MODEL CODE			
CODE	DRIVE TYPE	ENGINE	WHEEL-BASE
RZN142	2WD	1RZ	Short
RZN144		3RZ-FE	
RZN147		1RZ-E or 1RZ	Long
RZN148		2RZ-FE	
RZN149		3RZ-FE	
RZN154			Extra Long
RZN168	4WD	2RZ-FE	Long
RZN169		3RZ-FE	
RZN193*	2WD	2RZ-FE	
RZN167	4WD	5VZ-FE	
VZN172			Extra Long
LN141	2WD	3L	Short
LN145		2L	Long
LN146		3L	
LN152		5L-E	Extra Long
LN166	4WD	3L	Long
LN167		5L-E	
LN171		3L	Extra Long
LN172		5L-E	
LN191*	2WD	3L	Long
KZN165	4WD	1KZ-TE	
KDN145	2WD	2KD-FTV	
KDN150			Extra Long
KDN165	4WD		Long
KDN170			Extra Long
KDN190*	2WD		Long

* : Prerunner

2

STEERING WHEEL POSITION
L : Left-Hand Drive
R : Right-Hand Drive

3

CAB TYPE
T : Regular Cab
P : Double Cab
C : Extra Cab

4

DECK TYPE
R : Steel Low Deck

5

GEARSHIFT TYPE
M : 5-Speed Manual, Floor
P : 4-Speed Automatic, Floor

6

GRADE
D : DLX
S : SR

7

ENGINE SPECIFICATION
S : Caburetor or Diesel
E : EFI
K : DOHC and EFI
T : Turbocharger and EFI
Y : Common-Rail Diesel

8

DESTINATION
W : Europe
Q : Australia
V : G.C.C. (Gulf Cooperation Council) Countries
Blank : General Countries

9

COMPLETENESS CLASSIFICATION
3 : Cab and Chassis
Blank : Complete Model

MODEL LINE-UP

Europe

DRIVE TYPE	ENGINE	LOADING CAPACITY	SEATING CAPACITY	WHEEL-BASE	CAB TYPE	GRADE	TRANSMISSION		
							5-Speed Manual		4-Speed Automatc
							G50	R151	A340E
2WD	2KD-FTV	1.0 t	2	Long	Regular Cab	DLX	KDN145$^{R}_{L}$-TRMDYW	—	—
							KDN145L-TRMDYW3	—	—
		0.5 t	5		Double Cab		KDN145L-PRMDYW3	—	—
						SR	KDN145L-PRMSYW	—	—
		0.75 t	2 (4)		Extra Cab	DLX	KDN150$^{R}_{L}$-CRMDYW	—	—
				Extra Long		SR	KDN150L-CRMSYW	—	—
							KDN150L-CRMSYW3	—	—
		0.5 t	5	Long	Double Cab		—	—	KDN190L-PRPSYW*
4WD		0.75 t	2		Regular Cab	DLX	—	KDN165$^{R}_{L}$-TRMDYW	—
							—	KDN165L-TRMDYW3	—
		0.5 t	5		Double Cab		—	KDN165R-PRMDYW	—
						SR	—	KDN165R-PRMSYW	—
						DLX	—	KDN165L-PRMDYW	—
							—	KDN165L-PRMDYW3	—
						SR	—	KDN165L-PRMSYW	—
		0.75 t	2 (4)	Extra Long	Extra Cab	DLX	—	KDN170L-CRMDYW	—
						SR	—	KDN170L-CRMSYW	—
							—	KDN170L-CRMSYW3	—

( ) : Option

* : Prerunner (2WD model with 4WD model appearance.)

DRIVE TYPE	EN-GINE	LOAD-ING CAPA-CITY	SEATING CAPA-CITY	WHEEL-BASE	CAB TYPE	GRADE	TRANSMISSION					
							5-Speed Manual				4-Speed Automatic	
							W56	G52	R150F	R151	A340E	A340F
2WD	3RZ-FE	1.0 t	3 (2)	Long	Regular Cab	DLX	RZN149R-TRMDKQ	—	—	—	—	—
							RZN149R-TRMDKQ3	—	—	—	—	—
							—	—	—	—	RZN149R-TRPDKQ3	—
		0.5 t	5		Double Cab		RZN149R-PRMDKQ	—	—	—	—	—
						SR	RZN149R-PRMSKQ	—	—	—	—	—
						DLX	—	—	—	—	RZN149R-PRPDKQ	—
						SR	—	—	—	—	RZN149R-PRPSKQ	—
		0.75 t	2 (4)	Extra Long	Extra Cab	DLX	RZN154R-CRMDKQ	—	—	—	—	—
							—	—	—	—	RZN154R-CRPDKQ	—
	5L-E	1.0 t	3 (2)	Long	Regular Cab		—	LN147R-TRMDEQ3	—	—	—	—
		0.5 t	5		Double Cab		—	LN147R-PRMDEQ	—	—	—	—
						SR	—	LN147R-PRMSEQ	—	—	—	—
		0.75 t	2 (4)	Extra Long	Extra Cab	DLX	—	LN152R-CRMDEQ	—	—	—	—
4WD			3 (2)	Long	Regular Cab		—	LN167R-TRMDEQ3	—	—	—	—
		0.5 t			Double Cab		—	LN167R-PRMDEQ	—	—	—	—
		0.75 t	2 (4)	Extra Long	Extra Cab		—	LN172R-CRMDEQ	—	—	—	—
							—	LN172R-CRMDEQ3	—	—	—	—
	1KZ-TE	1.0 t	3 (2)	Long	Regular Cab		—	—	—	KZN165R-TRMDTQ	—	—
		0.5 t	5		Double Cab		—	—	—	KZN165R-TRMDTQ3	—	—
							—	—	—	KZN165R-PRMDTQ	—	—
							—	—	—	KZN165R-PRMDTQ3	—	—
						SR	—	—	—	KZN165R-PRMSTQ	—	—
	5VZ-FE	1.0 t	3 (2)		Regular Cab	DLX	—	—	VZN167R-TRMDEQ	—	—	—
							—	—	VZN167R-TRMDEQ3	—	—	—
		0.5 t	5		Double Cab		—	—	VZN167R-PRMDEQ	—	—	—
						SR	—	—	VZN167R-PRMSEQ	—	—	—
						DLX	—	—	—	—	—	VZN167R-PRPDEQ
						SR	—	—	—	—	—	VZN167R-PRPSEQ
		0.75 t	2 (4)	Extra Long	Extra Cab	DLX	—	—	VZN172R-CRMDEQ	—	—	—
							—	—	—	—	—	VZN172R-CRPDEQ

( ) : Option

DRIVE TYPE	ENGINE	LOADING CAPACITY	SEATING CAPACITY	WHEELBASE	CAB TYPE	GRADE	TRANSMISSION		
							5-Speed Manual		
							W56	G52	G54
2WD	1RZ	1.0 t	3	Short	Regular Cab	DLX			RZN142L-TRMDSV
				Long					RZN147L-TRMDSV
		0.5 t	6		Double Cab				RZN147L-PRMDSV
	3RZ-FE	1.0 t	3	Short	Regular Cab	DLX	RZN144L-TRMDKV		
						SR	RZN144L-TRMSKV		
				Long			RZN149L-TRMSKV		
		0.5 t	6		Double Cab	DLX	RZN149L-PRMDKV		
						SR	RZN149L-PRMSKV		
4WD		0.75 t	3 (2)		Regular Cab	DLX	RZN169L-TRMDKV		
		0.5 t	6 (5)		Double Cab		RZN169L-PRMDKV		
2WD	3L	1.0 t	3	Short	Regular Cab	DLX		LN141L-TRMDSV	
		0.5 t	6	Long	Double Cab			LN146L-PRMDSV	
4WD			6 (5)					LN166L-PRMDSV	

( ) : Option

DRIVE TYPE	EN-GINE	LOADING CAPAC-ITY	SEATING CAPAC-ITY	WHEEL-BASE	CAB TYPE	GRADE	TRANSMISSION			
							5-Speed Manual			4-Speed Automatic
							W56	G52	G54	A43DL
2WD	1RZ	1.0 t	3 (2)	Short	Regular Cab	DLX	—	—	RZN142L-TRMDS	—
				Long			—	—	RZN147$^{R}_{L}$-TRMDS	—
		0.5 t	6 (5)		Double Cab		—	—	RZN147$^{R}_{L}$-PRMDS	—
	2RZ-FE	1.0 t	3 (2)		Regular Cab		RZN148L-TRMDK	—	—	—
		0.5 t	6 (5)		Double Cab		RZN148L-PRMDK	—	—	—
			2 (5)			SR	RZN148L-PRMSK	—	—	—
			6 (5)			DLX	RZN193L-PRMDK*	—	—	—
4WD		0.75 t	3 (2)		Regular Cab		RZN168L-TRMDK	—	—	—
		0.5 t	6 (5)		Double Cab		RZN168L-PRMDK	—	—	—
			2 (5)			SR	RZN168L-PRMSK	—	—	—
2WD	3RZ-FE	0.75 t	2 (4)	Extra Long	Extra Cab	DLX	RZN154L-CRMDK	—	—	—
4WD			3 (2)	Long	Regular Cab		RZN169$^{R}_{L}$-TRMDK	—	—	—
		0.5 t	6 (5)		Double Cab		RZN169$^{R}_{L}$-PRMDK	—	—	—
			2 (5)			SR	RZN169L-PRMSK	—	—	—
2WD	2L	1.0 t	3 (2)		Regular Cab	DLX	—	LN145$^{R}_{L}$-TRMDS	—	—
							—	LN145L-TRMDS3	—	—
		0.5 t	6 (5)		Double Cab		—	LN145$^{R}_{L}$-PRMDS	—	—
	3L						—	LN191L-PRMDS*	—	—
4WD		0.75 t	3 (2)		Regular Cab		—	LN166$^{R}_{L}$-TRMDS	—	—
		0.5 t	6 (5)		Double Cab		—	LN166$^{R}_{L}$-PRMDS	—	—
			2 (5)			SR	—	LN166L-PRMSS	—	—
		0.75 t	2 (4)	Extra Long	Extra Cab	DLX	—	LN171L-CRMDS	—	—

( ) : Option

* : Prerunner (2WD model with 4WD model appearance.)

NEW FEATURES

■ ALL ENGINES

Cooling System

The TOYOTA genuine Super Long Life Coolant (SLLC) has been adopted. As result, the maintenance interval has been extended.

▶ Specifications ◀

Model					New	Previous
Engine Coolant	Capacity Liters (US qts, Imp.qts)	1RZ	Without Heater	M/T	8.0 (8.5, 7.0)	←
				A/T	7.7 (8.1, 6.8)	←
			With Front Heater	M/T	9.0 (9.5, 7.9)	←
				A/T	8.7 (9.2, 7.7)	←
			With Front and Rear Heater	M/T	10.0 (10.6, 8.8)	←
				A/T	9.7 (10.3, 8.5)	←
		1RZ-E	Without Front Heater		8.0 (8.5, 7.0)	←
			With Front Heater		9.0 (9.5, 7.9)	←
		2RZ-FE	M/T		9.3 (9.8, 8.2)	←
			A/T		9.5 (10.0, 8.4)	←
		3RZ-FE	M/T		9.5 (10.0, 8.4)	←
			A/T		9.3 (9.8, 8.2)	←
		5VZ-FE	Without Rear Heater		8.0 (8.5, 7.0)	←
			With Rear Heater		9.0 (9.5, 7.9)	←
		2L	—		9.2 (9.7, 8.1)	←
		3L	—		9.0 (9.5, 8.0)	←
		5L-E	—		9.3 (9.8, 8.1)	←
		1KZ-TE	M/T		12.2 (12.9, 10.7)	←
			A/T		12.0 (12.7, 10.6)	←
		2KD-FTV	Without Rear Heater	M/T	9.5 (10.0, 8.4)	←
				A/T	10.0 (10.6, 8.8)	←
			With Rear Heater	M/T	10.5 (11.1, 9.2)	←
				A/T	11.0 (11.6, 9.7)	←
	Type				TOYOTA Genuine SLLC	TOYOTA Genuine LLC
	Maintenance Intervals		First time		160,000 km (100,000 mile)	Every 40,000 km (25,000 mile) or 24 months whichever comes first
			Subsequent		Every 80,000 km (50,000 mile)	
	Color				Pink	Red
Thermostat	Operating Temperature °C (°F)				80 – 84 (176 – 183)	←

- SLLC is pre-mixed (50% coolant and 50% distilled water), so no dilution is needed when adding or replacing SLLC in the vehicle.
- If LLC is mixed with SLLC, the interval for LLC (every 40,000 km/25,000 miles or 24 months) should be used.
- You can also apply the new maintenance interval (every 80,000 km/50,000 mile) to vehicles initially filled with LLC (red-colored) if you use SLLC (pink-colored) for the coolant change.

■1RZ AND 2RZ ENGINES

The starter of the 1RZ and 2RZ engine models for General Countries and the G.C.C. (Gulf Cooperation Council) countries has been changed from R1.0 kW to RA1.2 kW in order to improve startability.

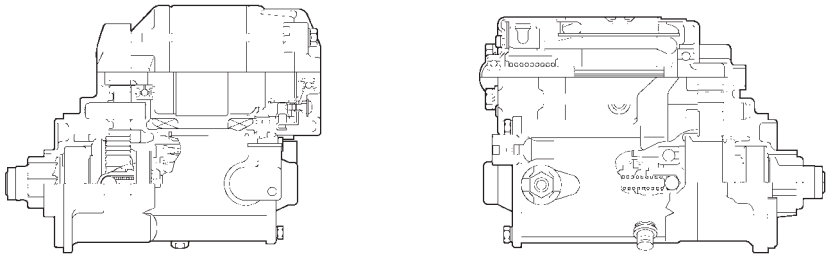

New **Previous**

258HL03

▶ Specifications ◀

Model	New	Previous
Rating Output	1.2 kW	1.0 kW
Rating Voltage	12 V	←
Length	144 mm (5.67 in)	166 mm (6.54 in)
Weight	3,400 g (7.49 lb)	3,850 g (8.48 lb)
Rotating of Direction*	Counterclockwise	←

*: Viewed from Pinion Side

■3RZ-FE ENGINE

1. General

- A thin-wall, ceramic type TWC has been adopted.
- One oxygen sensor has been newly provided in front of the TWC in order to improve the exhaust reduction performance of the TWC through feedback control to the engine ECU.

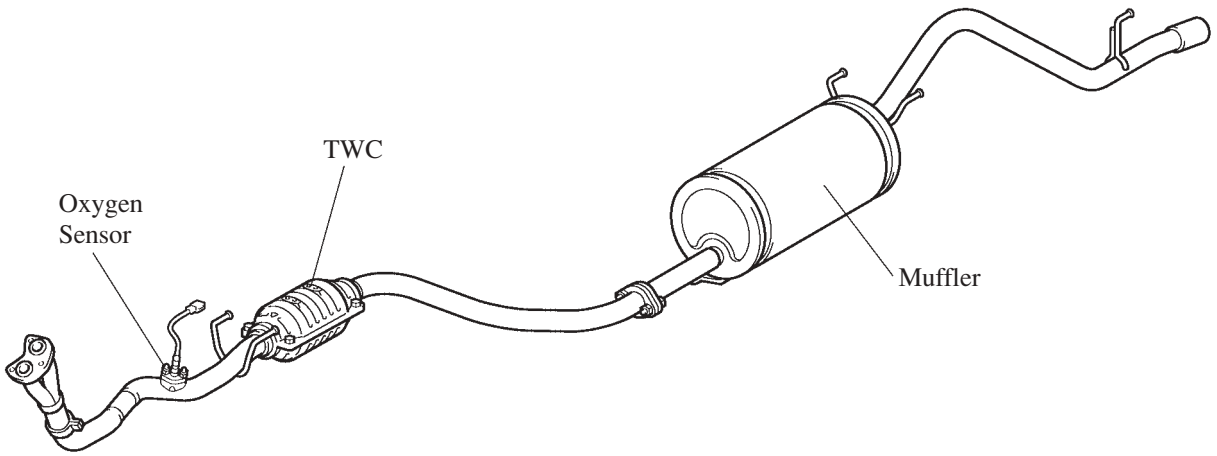

258HL01

7

2. TWC (Three-way Catalytic Converter)

A thin-wall, ceramic type TWC has been adopted. This TWC enables to improve exhaust emissions by optimizing the wall thickness.

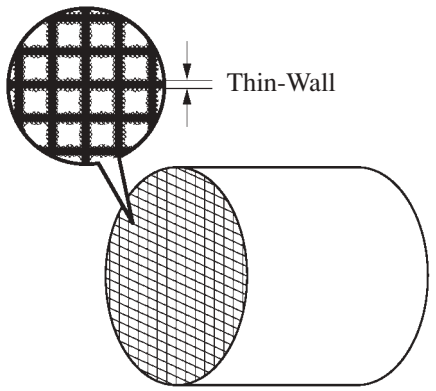

198EG06

– MEMO –

MAJOR TECHNICAL SPECIFICATIONS

Item \ Area				Europe			
Body Type				Regular Cab (2WD)			Double Cab (2WD)
Vehicle Grade				DLX			
Model Code				KDN145R-TRMDYW	KDN145L-TRMDYW	KDN145L-TRMDYW3	KDN145L-PRMDYW3
Major Dimensions & Vehicle Weights	Overall	Length	mm (in.)	4785 (188.4), 4915 (193.5)*1	4785 (188.4), 4915 (193.5)*1	4785 (188.4), 4915 (193.5)*1	4785 (188.4), 4915 (193.5)*1
		Width	mm (in.)	1700 (66.9)	1700 (66.9)	1700 (66.9)	1700 (66.9)
		Height	mm (in.)	1605 (63.2)	1605 (63.2)	1605 (63.2)	1630 (64.2), 1640 (64.6)*4
	Wheel Base		mm (in.)	2850 (112.2)	2850 (112.2)	2850 (112.2)	2850 (112.2)
	Tread	Front	mm (in.)	1395 (54.9)	1395 (54.9)	1395 (54.9)	1395 (54.9)
		Rear	mm (in.)	1410 (55.5)	1410 (55.5)	1410 (55.5)	1410 (55.5)
	Room	Length	mm (in.)	1015 (40.0)	1015 (40.0)	1015 (40.0)	1820 (71.7)
		Width	mm (in.)	1405 (55.3)	1405 (55.3)	1405 (55.3)	1405 (55.3)
		Height	mm (in.)	1135 (44.7)	1135 (44.7)	1135 (44.7)	1165 (45.9)
	Cargo Space	Length	mm (in.)	2160 (85.0)	2160 (85.0)	—	—
		Width	mm (in.)	1465 (57.7)	1465 (57.7)	—	—
		Height	mm (in.)	405 (15.9)	405 (15.9)	—	—
	Overhang	Front	mm (in.)	795 (31.3)	795 (31.3)	795 (31.3)	795 (31.3)
		Rear	mm (in.)	1140 (44.9), 1270 (54.0)*1	1140 (44.9), 1270 (54.0)*1	1140 (44.9), 1270 (54.0)*1	1140 (44.9), 1270 (54.0)*1
	Min. Running Ground Clearance		mm (in.)	190 (7.5)	190 (7.5)	190 (7.5)	190 (7.5)
	Angle of Approach		degrees	27	27	27	26
	Angle of Departure		degrees	27	27	27	26
	Curb Weight	Front	kg (lb)	820 (1808)	800 (1764)	800 (1764)	820 (1808)
		Rear	kg (lb)	545 (1202)	545 (1202)	545 (1202)	650 (1334)
		Total	kg (lb)	1365 (3009)	1345 (2965)	1345 (2965)	1425 (3142)
	Gross Vehicle Weight	Front	kg (lb)	925 (2039)	925 (2039)	925 (2039)	880 (1940)
		Rear	kg (lb)	1490 (3285)	1490 (3285)	1490 (3285)	1535 (3384)
		Total	kg (lb)	2415 (5324)	2415 (5324)	2415 (5324)	2415 (5324)
	Fuel Tank Capacity		ℓ (Imp.gal.)	69 (15.2)	69 (15.2)	69 (15.2)	66 (14.5)
	Luggage Compartment Capacity		m^3 (cu.ft.)	—	—	—	—
Performance	Max. Speed		km / h (mph)	150 (93)	150 (93)	150 (93)	150 (93)
	Max. Cruising Speed		km / h (mph)	—	—	—	—
	Max. Permissible Speed	1st Gear	km / h (mph)	32 (20)	32 (20)	32 (20)	32 (20)
		2nd Gear	km / h (mph)	54 (34)	54 (34)	54 (34)	54 (34)
		3rd Gear	km / h (mph)	87 (54)	87 (54)	87 (54)	87 (54)
		4th Gear	km / h (mph)	127 (79)	127 (79)	127 (79)	127 (79)
	Min. Turning Radius	Tire	m (ft.)	5.8 (19.0)	5.8 (19.0)	5.8 (19.0)	5.8 (19.0)
		Body	m (ft.)	6.2 (20.3)	6.2 (20.3)	6.2 (20.3)	6.2 (20.3)
Engine	Engine Type			2KD-FTV	2KD-FTV	2KD-FTV	2KD-FTV
	Valve Mechanism			16-Valve, DOHC	16-Valve, DOHC	16-Valve, DOHC	16-Valve, DOHC
	Bore x Stroke		mm (in.)	92.0 x 93.8 (3.62 x 3.69)	92.0 x 93.8 (3.62 x 3.69)	92.0 x 93.8 (3.62 x 3.69)	92.0 x 93.8 (3.62 x 3.69)
	Displacement		cm^3 (cu.in.)	2494 (386.6)	2494 (386.6)	2494 (386.6)	2494 (386.6)
	Compression Ratio			18.5 : 1	18.5 : 1	18.5 : 1	18.5 : 1
	Fuel System			Common-Rail Type	Common-Rail Type	Common-Rail Type	Common-Rail Type
	Research Octane No. or Cetane No. (Diesel)			48 or higher	48 or higher	48 or higher	48 or higher
	Max. Output (EEC)		kW / rpm	65 / 3800	65 / 3800	65 / 3800	65 / 3800
	Max. Torque (EEC)		N·m / rpm	192 / 1200-3000	192 / 1200-3000	192 / 1200-3000	192 / 1200-3000
Engine Electrical	Battery Capacity (5HR)		Voltage & Amp. hr.	12-55 x 2	12-55, 55 x 2*7	12-55, 55 x 2*7	12-55, 55 x 2*7
	Alternator Output		Watts	840	840	840	840
	Starter Output		kW	2.7	2.0, 2.7*7	2.0, 2.7*7	2.0, 2.7*7
Chassis	Clutch Type			Dry, Single Plate Diaphragm	Dry, Single Plate Diaphragm	Dry, Single Plate Diaphragm	Dry, Single Plate Diaphragm
	Transmission Type			G50	G50	G50	G50
	Transmission Gear Ratio	In First		3.928	3.928	3.928	3.928
		In Second		2.333	2.333	2.333	2.333
		In Third		1.451	1.451	1.451	1.451
		In Fourth		1.000	1.000	1.000	1.000
		In Fifth		0.798	0.798	0.798	0.798
		In Reverse		4.743	4.743	4.743	4.743
	Transfer Gear Ratio H4 / L4			—	—	—	—
	Differential Gear Ratio (Front / Rear)			— / 4.100	— / 4.100	— / 4.100	— / 4.100
	Differential Gear Size (Front / Rear)		in.	— / 8.0	— / 8.0	— / 8.0	— / 8.0
	Brake Type	Front		Ventilated Disc	Ventilated Disc	Ventilated Disc	Ventilated Disc
		Rear		Leading-Trailing Drum	Leading-Trailing Drum	Leading-Trailing Drum	Leading-Trailing Drum
	Parking Brake Type			Drum	Drum	Drum	Drum
	Brake Booster Type and Size		in.	Tandem 7.5" + 7.5"	Tandem 7.5" + 7.5"	Tandem 7.5" + 7.5"	Tandem 7.5" + 7.5"
	Proportioning Valve Type			LSP & BV	LSP & BV	LSP & BV	LSP & BV
	Suspension Type	Front		Double Wishbone	Double Wishbone	Double Wishbone	Double Wishbone
		Rear		Leaf Spring	Leaf Spring	Leaf Spring	Leaf Spring
	Stabilizer Bar	Front		Standard	Standard	Standard	Standard
		Rear		—	—	—	—
	Steering Gear Type			Recirculating Ball	Recirculating Ball	Recirculating Ball	Recirculating Ball
	Steering Gear Ratio (Overall)			21.2	21.9, 21.2*8	21.9, 21.2*8	21.9, 21.2*8
	Power Steering Type			Integral Type	Integral Type*7	Integral Type*7	Integral Type*7

*1: With Rear Step Bumper
*3: With 255 / 70 R 16 Tire
*4: With 205 R 16 Tire
*6: With Moon Roof
*7: Option
*8: With Power Steering

Europe					
Double Cab (2WD)	Extra Cab (2WD)				Double Cab (2WD)
SR	DLX		SR		
KDN145L-PRMSYW	KDN150R-CRMDYW	KDN150L-CRMDYW	KDN150L-CRMSYW	KDN150L-CRMSYW3	KDN190L-PRPSYW
4785 (188.4), 4915 (193.5)*1	5030 (198.0), 5160 (203.1)*1	5030 (198.0), 5160 (203.1)*1	5030 (198.0), 5160 (203.1)*1	5030 (198.0), 5160 (203.1)*1	4785 (188.4), 4915 (193.5)*1
1700 (66.9)	1700 (66.9)	1700 (66.9)	1700 (66.9)	1700 (66.9)	1700 (66.9), 1790 (70.5)*3
1630 (64.2), 1640 (64.6)*4	1605 (63.2), 1595 (62.8)*4	1605 (63.2), 1595 (62.8)*4	1605 (63.2), 1595 (62.8)*4	1605 (63.2), 1595 (62.8)*4	1780 (70.1), 1785 (70.3)*3
2850 (112.2)	3085 (121.5)	3085 (121.5)	3085 (121.5)	3085 (121.5)	2860 (112.6)
1395 (54.9)	1395 (54.9)	1395 (54.9)	1395 (54.9)	1395 (54.9)	1440 (56.7), 1485 (58.5)*3
1410 (55.5)	1410 (55.5)	1410 (55.5)	1410 (55.5)	1410 (55.5)	1425 (56.1), 1470 (57.9)*3
1820 (71.7)	1515 (59.6)	1515 (59.6)	1515 (59.6)	1515 (59.6)	1820 (71.7)
1405 (55.3)	1405 (55.3)	1405 (55.3)	1405 (55.3)	1405 (55.3)	1405 (55.3)
1165 (45.9)	1140 (44.9)	1140 (44.9)	1140 (44.9), 1115 (43.9)*6	1140 (44.9), 1115 (43.9)*6	1165 (45.9)
1355 (53.3)	1855 (73.0)	1855 (73.0)	1855 (73.0)	—	1355 (53.3)
1465 (57.7)	1450 (57.1)	1450 (57.1)	1450 (57.1)	—	1465 (57.7)
405 (15.9)	405 (15.9)	405 (15.9)	405 (15.9)	—	405 (15.9)
795 (31.3)	795 (31.3)	795 (31.3)	795 (31.3)	795 (31.3)	795 (31.3)
1140 (44.9)	1150 (45.3), 1280 (50.4)*1	1150 (45.3), 1280 (50.4)*1	1150 (45.3), 1280 (50.4)*1	1150 (45.3), 1280 (50.4)*1	1140 (44.9)
190 (7.5)	190 (7.5)	190 (7.5)	190 (7.5)	190 (7.5)	225 (8.9)
26	25	25	25	25	26
26	25	25	25	25	26
845 (1863)	—	825 (1819)	825 (1819)	825 (1819)	930 (2050)
615 (1356)	—	585 (1290)	590 (1301)	590 (1301)	690 (1521)
1460 (3219)	—	1410 (3109)	1415 (3120)	1415 (3120)	1620 (3571)
880 (1940)	—	870 (1918)	870 (1918)	870 (1918)	1080 (2381)
1535 (3384)	—	1545 (3406)	1545 (3406)	1545 (3406)	1435 (3164)
2415 (5324)	2415	2415 (5324)	2415 (5324)	2415 (5324)	2515 (5545)
66 (14.5)	69 (15.2)	69 (15.2)	69 (15.2)	69 (15.2)	66 (14.5)
—	—	—	—	—	—
150 (93)	150 (93)	150 (93)	150 (93)	150 (93)	150 (93)
—	—	—	—	—	—
32 (20)	33 (21)	33 (21)	33 (21)	33 (21)	48 (30)
54 (34)	56 (35)	56 (35)	56 (35)	56 (35)	89 (55)
87 (54)	90 (56)	90 (56)	90 (56)	90 (56)	—
127 (79)	130 (81)	130 (81)	130 (81)	130 (81)	—
5.8 (19.0)	6.0 (19.7)	6.0 (19.7)	6.0 (19.7)	6.0 (19.7)	5.8 (19.0)
6.2 (20.3)	6.5 (21.3)	6.5 (21.3)	6.5 (21.3)	6.5 (21.3)	6.2 (20.3)
2KD-FTV	2KD-FTV	2KD-FTV	2KD-FTV	2KD-FTV	2KD-FTV
16-Valve, DOHC	16-Valve, DOHC	16-Valve, DOHC	16-Valve, DOHC	16-Valve, DOHC	16-Valve, DOHC
92.0 x 93.8 (3.62 x 3.69)	92.0 x 93.8 (3.62 x 3.69)	92.0 x 93.8 (3.62 x 3.69)	92.0 x 93.8 (3.62 x 3.69)	92.0 x 93.8 (3.62 x 3.69)	92.0 x 93.8 (3.62 x 3.69)
2494 (386.6)	2494 (386.6)	2494 (386.6)	2494 (386.6)	2494 (386.6)	2494 (386.6)
18.5 : 1	18.5 : 1	18.5 : 1	18.5 : 1	18.5 : 1	18.5 : 1
Common-Rail Type	Common-Rail Type	Common-Rail Type	Common-Rail Type	Common-Rail Type	Common-Rail Type
48 or higher	48 or higher	48 or higher	48 or higher	48 or higher	48 or higher
65 / 3800	65 / 3800	65 / 3800	65 / 3800	65 / 3800	75 / 3600
192 / 1200 - 3000	192 / 1200 - 3000	192 / 1200 - 3000	192 / 1200 - 3000	192 / 1200 - 3000	260 / 160 - 2400
12-55	12-55 x 2	12-55, 55 x 2*7	12-55, 55 x 2*7	12-55, 55 x 2*7	12-55
840	840	840	840	840	840
2.0	2.7	2.7	2.7	2.7	2.7
Dry, Single Plate Diaphragm	Dry, Single Plate Diaphragm	2.0, 2.7*7	2.0, 2.7*7	2.0, 2.7*7	—
G50	G50	G50	G50	G50	A340E
3.928	3.928	3.928	3.928	3.928	2.804
2.333	2.333	2.333	2.333	2.333	1.531
1.451	1.451	1.451	1.451	1.451	1.000
1.000	1.000	1.000	1.000	1.000	0.705
0.798	0.798	0.798	0.798	0.798	—
4.743	4.743	4.743	4.743	4.743	2.393
—	—	—	—	—	—
— / 4.100	— / 4.100	— / 4.100	— / 4.100	— / 4.100	— / 4.300
— / 8.0	— / 8.0	— / 8.0	— / 8.0	— / 8.0	— / 8.0
Ventilated Disc	Ventilated Disc	Ventilated Disc	Ventilated Disc	Ventilated Disc	Ventilated Disc
Leading-Trailing Drum	Leading-Trailing Drum	Leading-Trailing Drum	Leading-Trailing Drum	Leading-Trailing Drum	Leading-Trailing Drum
Drum	Drum	Drum	Drum	Drum	Drum
Tandem 7.5" + 7.5"	Tandem 7.5" + 7.5"	Tandem 7.5" + 7.5"	Tandem 7.5" + 7.5"	Tandem 7.5" + 7.5"	Tandem 7.5" + 7.5"
LSP & BV	LSP & BV	LSP & BV	LSP & BV	LSP & BV	LSP & BV
Double Wishbone	Double Wishbone	Double Wishbone	Double Wishbone	Double Wishbone	Double Wishbone
Leaf Spring	Leaf Spring	Leaf Spring	Leaf Spring	Leaf Spring	Leaf Spring
Standard	Standard	Standard	Standard	Standard	Standard
—	—	—	—	—	—
Recirculating Ball	Recirculating Ball	Recirculating Ball	Recirculating Ball	Recirculating Ball	Recirculating Ball
21.9, 21.2*8	21.2	21.9, 21.2*8	21.9, 21.2*8	21.2	21.2
Integral Type*7	Integral Type	Integral Type*7	Integral Type*7	Integral Type	Integral Type

Item \ Area				Europe			
Body Type				Regular Cab (4WD)			Double Cab (4WD)
Vehicle Grade				DLX			
Model Code				KDN165R-TRMDYW	KDN165L-TRMDYW	KDN165L-TRMDYW3	KDN165R-PRMDYW
Major Dimensions & Vehicle Weights	Overall	Length	mm (in.)	4915 (193.5)	4915 (193.5)	4915 (193.5)	4785 (188.4), 4915 (193.5)*1
		Width	mm (in.)	1700 (66.9)	1700 (66.9)	1700 (66.9)	1700 (66.9)
		Height	mm (in.)	1745 (68.7)	1745 (68.7)	1745 (68.7)	1780 (70.1)
	Wheel Base		mm (in.)	2860 (112.6)	2860 (112.6)	2860 (112.6)	2860 (112.6)
	Tread	Front	mm (in.)	1440 (56.7)	1440 (56.7)	1440 (56.7)	1440 (56.7)
		Rear	mm (in.)	1425 (56.1)	1425 (56.1)	1425 (56.1)	1425 (56.1)
	Room	Length	mm (in.)	1015 (40.0)	1015 (40.0)	1015 (40.0)	1820 (71.7)
		Width	mm (in.)	1405 (55.3)	1405 (55.3)	1405 (55.3)	1405 (55.3)
		Height	mm (in.)	1135 (44.7)	1135 (44.7)	1135 (44.7)	1165 (45.9)
	Cargo Space	Length	mm (in.)	2160 (85.0)	2160 (85.0)	—	1355 (53.3)
		Width	mm (in.)	1465 (57.7)	1465 (57.7)	—	1465 (57.7)
		Height	mm (in.)	405 (15.9)	405 (15.9)	—	405 (15.9)
	Overhang	Front	mm (in.)	790 (31.1)	790 (31.1)	790 (31.1)	790 (31.1)
		Rear	mm (in.)	1135 (44.7), 1265 (49.8)*1	1135 (44.7), 1265 (49.8)*1	1135 (44.7), 1265 (49.8)*1	1135 (44.7), 1265 (49.8)*1
	Min. Running Ground Clearance		mm (in.)	225 (8.9)	225 (8.9)	225 (8.9)	225 (8.9)
	Angle of Approach		degrees	37	37	37	37
	Angle of Departure		degrees	35	35	35	34
	Curb Weight	Front	kg (lb)	980 (2161)	995 (2194)	995 (2194)	995 (2194)
		Rear	kg (lb)	635 (1400)	690 (1521)	690 (1521)	690 (1521)
		Total	kg (lb)	1615 (3560)	1685 (3715)	1685 (3715)	1685 (3715)
	Gross Vehicle Weight	Front	kg (lb)	1110 (2447)	1080 (2381)	1080 (2381)	1080 (2381)
		Rear	kg (lb)	1405 (3097)	1435 (3164)	1435 (3164)	1435 (3164)
		Total	kg (lb)	2515 (5545)	2515 (5545)	2515 (5545)	2515 (5545)
	Fuel Tank Capacity		ℓ (Imp.gal.)	77 (16.9)	77 (16.9)	77 (16.9)	66 (14.5)
	Luggage Compartment Capacity		m^3 (cu.ft.)	—	—	—	—
Performance	Max. Speed		km / h (mph)	150 (93)	150 (93)	150 (93)	150 (93)
	Max. Cruising Speed		km / h (mph)	—	—	—	—
	Max. Permissible Speed	1st Gear	km / h (mph)	35 (22), 14 (9)*9	35 (22), 14 (9)*9	35 (22), 14 (9)*9	35 (22), 14 (9)*9
		2nd Gear	km / h (mph)	64 (40), 25 (16)*9	64 (40), 25 (16)*9	64 (40), 25 (16)*9	64 (40), 25 (16)*9
		3rd Gear	km / h (mph)	102 (63), 40 (25)*9	102 (63), 40 (25)*9	102 (63), 40 (25)*9	102 (63), 40 (25)*9
		4th Gear	km / h (mph)	149 (93), 58 (36)*9	149 (93), 58 (36)*9	149 (93), 58 (36)*9	149 (93), 58 (36)*9
	Min. Turning Radius	Tire	m (ft.)	6.1 (20.0)	6.1 (20.0)	6.1 (20.0)	6.1 (20.0)
		Body	m (ft.)	6.6 (21.7)	6.6 (21.7)	6.6 (21.7)	6.6 (21.7)
Engine	Engine Type			2KD-FTV	2KD-FTV	2KD-FTV	2KD-FTV
	Valve Mechanism			16-Valve, DOHC	16-Valve, DOHC	16-Valve, DOHC	16-Valve, DOHC
	Bore x Stroke		mm (in.)	92.0 x 93.8 (3.62 x 3.69)	92.0 x 93.8 (3.62 x 3.69)	92.0 x 93.8 (3.62 x 3.69)	92.0 x 93.8 (3.62 x 3.69)
	Displacement		cm^3 (cu.in.)	2494 (386.6)	2494 (386.6)	2494 (386.6)	2494 (386.6)
	Compression Ratio			18.5 : 1	18.5 : 1	18.5 : 1	18.5 : 1
	Fuel System			Common-Rail Type	Common-Rail Type	Common-Rail Type	Common-Rail Type
	Research Octane No. or Cetane No. (Diesel)			48 or higher	48 or higher	48 or higher	48 or higher
	Max. Output (EEC)		kW/rpm	75 / 3600	75 / 3600	75 / 3600	75 / 3600
	Max. Torque (EEC)		N·m / rpm	260 / 1600 - 2400	260 / 1600 - 2400	260 / 1600 - 2400	260 / 1600 - 2400
Engine Electrical	Battery Capacity (5HR)		Voltage & Amp. hr.	12-55 x 2	12-55 x 2	12-55 x 2	12-55 x 2
	Alternator Output		Watts	840	840	840	840
	Starter Output		kW	2.7	2.7	2.7	2.7
Chassis	Clutch Type			Dry, Single Plate Diaphragm	Dry, Single Plate Diaphragm	Dry, Single Plate Diaphragm	Dry, Single Plate Diaphragm
	Transmission Type			R151F	R151F	R151F	R151F
	Transmission Gear Ratio	In First		4.313	4.313	4.313	4.313
		In Second		2.330	2.330	2.330	2.330
		In Third		1.436	1.436	1.436	1.436
		In Fourth		1.000	1.000	1.000	1.000
		In Fifth		0.838	0.838	0.838	0.838
		In Reverse		4.220	4.220	4.220	4.220
	Transfer Gear Ratio H4 / L4			1.000 / 2.566	1.000 / 2.566	1.000 / 2.566	1.000 / 2.566
	Differential Gear Ratio (Front / Rear)			3.909 / 3.909	3.909 / 3.909	3.909 / 3.909	3.909 / 3.909
	Differential Gear Size (Front /Rear)		in.	7.5 / 8.0	7.5 / 8.0	7.5 / 8.0	7.5 / 8.0
	Brake Type	Front		Ventilated Disc	Ventilated Disc	Ventilated Disc	Ventilated Disc
		Rear		Leading-Trailing Drum	Leading-Trailing Drum	Leading-Trailing Drum	Leading-Trailing Drum
	Parking Brake Type			Drum	Drum	Drum	Drum
	Brake Booster Type and Size		in.	Tandem 7.5" + 7.5"	Tandem 7.5" + 7.5"	Tandem 7.5" + 7.5"	Tandem 7.5" + 7.5"
	Proportioning Valve Type			LSP & BV	LSP & BV	LSP & BV	LSP & BV
	Suspension Type	Front		Double Wishbone	Double Wishbone	Double Wishbone	Double Wishbone
		Rear		Leaf Spring	Leaf Spring	Leaf Spring	Leaf Spring
	Stabilizer Bar	Front		Standard	Standard	Standard	Standard
		Rear		—	—	—	—
	Steering Gear Type			Recirculating Ball	Recirculating Ball	Recirculating Ball	Recirculating Ball
	Steering Gear Ratio (Overall)			19.6	19.6	19.6	19.6
	Power Steering Type			Integral Type	Integral Type	Integral Type	Integral Type

*1: With Rear Step Bumper
*3: With 255 / 70 R 16 Tire
*7: Option
*9: Transfer in Low

	Europe					
	Double Cab (4WD)				Extra Cab (4WD)	
	SR	DLX		SR	DLX	SR
	KDN165R-PRMSYW	KDN165L-PRMDYW	KDN165L-PRMDYW3	KDN165R-PRMSYW	KDN170L-CRMDYW	KDN170L-CRMSYW
5	4785 (188.4), 4915 (193.5)*1	4785 (188.4), 4915 (193.5)*1	4785 (188.4), 4915 (193.5)*1	4785 (188.4), 4915 (193.5)*1	5030 (198.0), 5160 (203.1)*1	5030 (198.0), 5160 (203.1)*1
	1700 (66.9), 1790 (70.5)*3	1700 (66.9)	1700 (66.9)	1700 (66.9), 1790 (70.5)*3	1700 (66.9)	1700 (66.9), 1790 (70.5)*3
	1780 (70.1), 1785 (70.3)*3	1780 (70.1)	1780 (70.1)	1780 (70.1), 1785 (70.3)*3	1750 (68.9)	1750 (68.9), 1775 (69.1)*3
	2860 (112.6)	2860 (112.6)	2860 (112.6)	2860 (112.6)	3095 (121.9)	3095 (121.9)
	1440 (56.7), 1485 (58.5)*3	1440 (56.7)	1440 (56.7)	1440 (56.7)	1440 (56.7)	1440 (56.7)
10	1425 (56.1), 1470 (57.9)*3	1425 (56.1)	1425 (56.1)	1425 (56.1), 1470 (57.9)*3	1425 (56.1), 1470 (57.9)*3	1425 (56.1), 1470 (57.9)*3
	1820 (71.7)	1820 (71.7)	1820 (71.7)	1820 (71.7)	1515 (59.6)	1515 (59.6)
	1405 (55.3)	1405 (55.3)	1405 (55.3)	1405 (55.3)	1405 (55.3)	1405 (55.3)
	1165 (45.9)	1165 (45.9)	1165 (45.9)	1165 (45.9)	1140 (44.9)	1140 (44.9)
	1355 (53.3)	1355 (53.3)	—	1335 (53.3)	1855 (73.0)	1855 (73.0)
15	1465 (57.7)	1465 (57.7)	—	1465 (57.7)	1450 (57.1)	1450 (57.1)
	405 (15.9)	405 (15.9)	—	405 (15.9)	405 (15.9)	405 (15.9)
	790 (31.1)	790 (31.1)	790 (31.1)	790 (31.1)	790 (31.1)	790 (31.1)
	1135 (44.7), 1265 (49.8)*1	1135 (44.7), 1265 (49.8)*1	1135 (44.7), 1265 (49.8)*1	1135 (44.7), 1265 (49.8)*1	1145 (45.1), 1275 (50.2)*1	1145 (45.1), 1275 (50.2)*1
	225 (8.9)	225 (8.9)	225 (8.9)	225 (8.9)	225 (8.9)	225 (8.9)
20	37	37	37	37	36	36
	34	34	34	34	34	34
	1000 (2205)	995 (2194)	995 (2194)	1000 (2205)	1010 (2227)	1010 (2227)
	695 (1532)	690 (1521)	690 (1521)	695 (1532)	670 (1477)	675 (1488)
	1695 (3737)	1685 (3715)	1685 (3715)	1695 (3737)	1680 (3704)	1685 (3715)
25	1080 (2381)	1080 (2381)	1080 (2381)	1080 (2381)	1080 (2381)	1080 (2381)
	1435 (3164)	1435 (3164)	1435 (3164)	1435 (3164)	1435 (3164)	1435 (3164)
	2515 (5545)	2515 (5545)	2515 (5545)	2515 (5545)	2515 (5545)	2515 (5545)
	66 (14.5)	66 (14.5)	66 (14.5)	66 (14.5)	77 (16.9)	66 (14.5)
	—	—	—	—	—	—
30	150 (93)	150 (93)	150 (93)	150 (93)	150 (93)	150 (93)
	—	—	—	—	—	—
	35 (22), 14 (9)*9	35 (22), 14 (9)*9	35 (22), 14 (9)*9	35 (22), 14 (9)*9	35 (22), 14 (9)*9	35 (22), 14 (9)*9
	64 (40), 25 (16)*9	64 (40), 25 (16)*9	64 (40), 25 (16)*9	64 (40), 25 (16)*9	64 (40), 25 (16)*9	64 (40), 25 (16)*9
	102 (63), 40 (25)*9	102 (63), 40 (25)*9	102 (63), 40 (25)*9	102 (63), 40 (25)*9	102 (63), 40 (25)*9	102 (63), 40 (25)*9
35	149 (93), 58 (36)*9	149 (93), 58 (36)*9	149 (93), 58 (36)*9	149 (93), 58 (36)*9	149 (93), 58 (36)*9	149 (93), 58 (36)*9
	6.1 (20.0)	6.1 (20.0)	6.1 (20.0)	6.1 (20.0)	6.6 (21.7)	6.6 (21.7)
	6.6 (21.7)	6.6 (21.7)	6.6 (21.7)	6.6 (21.7)	7.1 (23.3)	7.1 (23.3)
	2KD-FTV	2KD-FTV	2KD-FTV	2KD-FTV	2KD-FTV	2KD-FTV
	16-Valve, DOHC	16-Valve, DOHC	16-Valve, DOHC	16-Valve, DOHC	16-Valve, DOHC	16-Valve, DOHC
40	92.0 x 93.8 (3.62 x 3.69)	92.0 x 93.8 (3.62 x 3.69)	92.0 x 93.8 (3.62 x 3.69)	92.0 x 93.8 (3.62 x 3.69)	92.0 x 93.8 (3.62 x 3.69)	92.0 x 93.8 (3.62 x 3.69)
	2494 (386.6)	2494 (386.6)	2494 (386.6)	2494 (386.6)	2494 (386.6)	2494 (386.6)
	18.5 : 1	18.5 : 1	18.5 : 1	18.5 : 1	18.5 : 1	18.5 : 1
	Common-Rail Type	Common-Rail Type	Common-Rail Type	Common-Rail Type	Common-Rail Type	Common-Rail Type
	48 or higher	48 or higher	48 or higher	48 or higher	48 or higher	48 or higher
45	75 / 3600	75 / 3600	75 / 3600	75 / 3600	75 / 3600	75 / 3600
	260 / 1600 - 2400	260 / 1600 - 2400	260 / 1600 - 2400	260 / 1600 - 2400	260 / 1600 - 2400	260 / 1600 - 2400
	12-55 x 2	12-55, 55 x 2*7	12-55, 55 x 2*7	12 - 55, 55 x 2*7	12-55, 55 x 2*7	12-55, 55 x 2*7
	840	840	840	840	840	840
	2.7	2.0, 2.7*7	2.0, 2.7*7	2.0, 2.7*7	2.0, 2.7*7	2.0, 2.7*7
50	Dry, Single Plate Diaphragm	Dry, Single Plate Diaphragm	Dry, Single Plate Diaphragm	Dry, Single Plate Diaphragm	Dry, Single Plate Diaphragm	Dry, Single Plate Diaphragm
	R151F	R151F	R151F	R151F	R151F	R151F
	4.313	4.313	4.313	4.313	4.313	4.313
	2.330	2.330	2.330	2.330	2.330	2.330
	1.436	1.436	1.436	1.436	1.436	1.436
55	1.000	1.000	1.000	1.000	1.000	1.000
	0.838	0.838	0.838	0.838	0.838	0.838
	4.220	4.220	4.220	4.220	4.220	4.220
	1.000 / 2.566	1.000 / 2.566	1.000 / 2.566	1.000 / 2.566	1.000 / 2.566	1.000 / 2.566
	3.909 / 3.909	3.909 / 3.909	3.909 / 3.909	3.909 / 3.909	3.909 / 3.909	3.909 / 3.909
60	7.5 / 8.0	7.5 / 8.0	7.5 / 8.0	7.5 / 8.0	7.5 / 8.0	7.5 / 8.0
	Ventilated Disc	Ventilated Disc	Ventilated Disc	Ventilated Disc	Ventilated Disc	Ventilated Disc
	Leading-Trailing Drum	Leading-Trailing Drum	Leading-Trailing Drum	Leading-Trailing Drum	Leading-Trailing Drum	Leading-Trailing Drum
	Drum	Drum	Drum	Drum	Drum	Drum
	Tandem 7.5" + 7.5"	Tandem 7.5" + 7.5"	Tandem 7.5" + 7.5"	Tandem 7.5" + 7.5"	Tandem 7.5" + 7.5"	Tandem 7.5" + 7.5"
65	LSP & BV	LSP & BV	LSP & BV	LSP & BV	LSP & BV	LSP & BV
	Double Wishbone	Double Wishbone	Double Wishbone	Double Wishbone	Double Wishbone	Double Wishbone
	Leaf Spring	Leaf Spring	Leaf Spring	Leaf Spring	Leaf Spring	Leaf Spring
	Standard	Standard	Standard	Standard	Standard	Standard
	—	—	—	—	—	—
70	Recirculating Ball	Recirculating Ball	Recirculating Ball	Recirculating Ball	Recirculating Ball	Recirculating Ball
	19.6	19.6	19.6	19.6	19.6	19.6
	Integral Type	Integral Type	Integral Type	Integral Type	Integral Type	Integral Type

Item \ Area				Europe	Australia		
Body Type				Extra Cab (4WD)	Regular Cab (2WD)		
Vehicle Grade				SR	DLX		
Model Code				KDN170L-CRMSYW3	RZN149R-TRMDKQ	RZN149R-TRMDKQ3	RZN149R-TRPDKQ3
Major Dimensions & Vehicle Weights	Overall	Length	mm (in.)	5030 (198.0), 5160 (203.1)*1	4785 (188.4), 4915 (193.5)*1	4785 (188.4)	4785 (188.4)
		Width	mm (in.)	1700 (66.9)	1700 (66.9)	1700 (66.9)	1700 (66.9)
		Height	mm (in.)	1750 (68.9)	1605 (63.2)	1605 (63.2)	1605 (63.2)
	Wheel Base		mm (in.)	3095 (121.9)	2850 (112.3)	2850 (112.3)	2850 (112.3)
	Tread	Front	mm (in.)	1440 (56.7)	1395 (54.9)	1395 (54.9)	1395 (54.9)
		Rear	mm (in.)	1425 (56.1)	1410 (55.5)	1410 (55.5)	1410 (55.5)
	Room	Length	mm (in.)	1515 (59.6)	1015 (40.0)	1015 (40.0)	1015 (40.0)
		Width	mm (in.)	1405 (55.3)	1405 (55.3)	1405 (55.3)	1405 (55.3)
		Height	mm (in.)	1140 (44.9), 1115 (43.9)*6	1135 (44.7)	1135 (44.7)	1135 (44.7)
	Cargo Space	Length	mm (in.)	—	2160 (85.0)	—	—
		Width	mm (in.)	—	1465 (57.7)	—	—
		Height	mm (in.)	—	405 (15.9)	—	—
	Overhang	Front	mm (in.)	790 (31.1)	795 (31.3)	795 (31.3)	795 (31.3)
		Rear	mm (in.)	1145 (45.1), 1275 (50.2)*1	1140 (44.9)	1140 (44.9)	1140 (44.9)
	Min. Running Ground Clearance		mm (in.)	225 (8.9)	200 (7.9)	200 (7.9)	200 (7.9)
	Angle of Approach		degrees	36	27	27	27
	Angle of Departure		degrees	34	27	27	27
	Curb Weight	Front	kg (lb)	1010 (2227)	740 (1631)	740 (1631)	750 (1653)
		Rear	kg (lb)	675 (1488)	565 (1246)	565 (1246)	455 (1003)
		Total	kg (lb)	1685 (3715)	1305 (2877)	1305 (2877)	1205 (2657)
	Gross Vehicle Weight	Front	kg (lb)	1080 (2381)	970 (2138)	970 (2138)	970 (2138)
		Rear	kg (lb)	1435 (3164)	1760 (3880)	1760 (3880)	1760 (3880)
		Total	kg (lb)	2515 (5545)	2730 (6019)	2730 (6019)	2730 (6019)
	Fuel Tank Capacity		ℓ (Imp.gal.)	77 (16.9)	69 (15.2)	69 (15.2)	69 (15.2)
	Luggage Compartment Capacity		m^3 (cu.ft.)	—	—	—	—
Performance	Max. Speed		km / h (mph)	150 (93)	170 (106)	170 (106)	170 (106)
	Max. Cruising Speed		km / h (mph)	—	—	—	—
	Max. Permissible Speed	1st Gear	km / h (mph)	35 (22), 14 (9)*9	45 (27)	45 (27)	54 (33)
		2nd Gear	km / h (mph)	64 (40), 25 (16)*9	83 (51)	83 (51)	112 (69)
		3rd Gear	km / h (mph)	102 (63), 40 (25)*9	129 (80)	129 (80)	—
		4th Gear	km / h (mph)	149 (93), 58 (36)*9	170 (105)	170 (105)	—
	Min. Turning Radius	Tire	m (ft.)	6.6 (21.7)	5.8 (19.0)	5.8 (17.0)	5.8 (17.0)
		Body	m (ft.)	7.1 (23.3)	6.2 (20.3)	6.2 (20.3)	6.2 (20.3)
Engine	Engine Type			2KD-FTV	3RZ-FE	3RZ-FE	3RZ-FE
	Valve Mechanism			16-Valve, DOHC	16-Valve, DOHC	16-Valve, DOHC	16-Valve, DOHC
	Bore x Stroke		mm (in.)	92.0 x 93.8 (3.62 x 3.69)	95.0 x 95.0 (3.74 x 3.74)	95.0 x 95.0 (3.74 x 3.74)	95.0 x 95.0 (3.74 x 3.74)
	Displacement		cm^3 (cu.in.)	2494 (386.6)	2694 (164.4)	2694 (164.4)	2694 (164.4)
	Compression Ratio			18.5 : 1	9.5 : 1	9.5 : 1	9.5 : 1
	Fuel System			Common-Rail Type	EFI	EFI	EFI
	Research Octane No. or Cetane No. (Diesel)			48 or higher	91 or higher	91 or higher	91 or higher
	Max. Output (EEC)		kW/ rpm	75 / 3600	108 / 4800 (SAE-NET)	108 / 4800 (SAE-NET)	108 / 4800 (SAE-NET)
	Max. Torque (EEC)		N·m / rpm	260 / 1600 - 2400	235 / 4000 (SAE-NET)	235 / 4000 (SAE-NET)	235 / 4000 (SAE-NET)
Engine Electrical	Battery Capacity (5HR)		Voltage & Amp. hr.	12-55, 55 x 2*7	12-48	12-48	12-48
	Alternator Output		Watts	840	840	840	840
	Starter Output		kW	2.0, 2.7*7	1.2	1.2	1.2
Chassis	Clutch Type			Dry, Single Plate Diaphragm	Dry, Single Plate Diaphragm	Dry, Single Plate Diaphragm	—
	Transmission Type			R151F	W56	W56	A340E
	Transmission Gear Ratio	In First		4.313	3.954	3.954	2.804
		In Second		2.330	2.141	2.141	1.531
		In Third		1.436	1.384	1.384	1.000
		In Fourth		1.000	1.000	1.000	0.705
		In Fifth		0.838	0.850	0.850	—
		In Reverse		4.220	4.091	4.091	2.393
	Transfer Gear Ratio H4 / L4			1.000 / 2.566	—	—	—
	Differential Gear Ratio (Front / Rear)			3.909 / 3.909	— / 3.727	— / 3.727	— / 3.727
	Differntial Gear Size (Front / Rear)		in.	7.5 / 8.0	— / 8.0	— / 8.0	— / 8.0
	Brake Type	Front		Ventilated Disc	Ventilated Disc	Ventilated Disc	Ventilated Disc
		Rear		Leading-Trailing Drum	Leading-Trailing Drum	Leading-Trailing Drum	Leading-Trailing Drum
	Parking Brake Type			Drum	Drum	Drum	Drum
	Brake Booster Type and Size		in.	Tandem 7.5" + 7.5"	Tandem 7.5" + 7.5"	Tandem 7.5" + 7.5"	Tandem 7.5" + 7.5"
	Proportioning Valve Type			LSP & BV	LSP & BV	LSP & BV	LSP & BV
	Suspension Type	Front		Double Wishbone	Double Wishbone	Double Wishbone	Double Wishbone
		Rear		Leaf Spring	Leaf Spring	Leaf Spring	Leaf Spring
	Stabilizer Bar	Front		Standard	Standard	Standard	Standard
		Rear		—	—	—	—
	Steering Gear Type			Recirculating Ball	Recirculating Ball	Recirculating Ball	Recirculating Ball
	Steering Gear Ratio (Overall)			19.6	21.2	21.2	21.2
	Power Steering Type			Integral Type	Integral Type	Integral Type	Integral Type

*1: With Rear Step Bumper
*6: With Moon Roof
*7: Option
*8: With Power Steering
*9: Transfer in Low
*10: With ABS

	Australia					
	Double Cab (2WD)				Extra Cab (2WD)	
	DLX	SR	DLX	SR	DLX	
	RZN149R-PRMDKQ	RZN149R-PRMSKQ	RZN149R-PRPDKQ	RZN149R-PRPSKQ	RZN154R-CRMDKQ	RZN154R-CRPDKQ
5	4785 (188.4), 4915 (193.5)*1	4785 (188.4), 4915 (193.5)*1	4785 (188.4), 4915 (193.5)*1	4785 (188.4), 4915 (193.5)*1	5030 (198.0), 5160 (203.1)*1	5030 (198.0), 5160 (203.1)*1
	1700 (66.9)	1700 (66.9)	1700 (66.9)	1700 (66.9)	1700 (66.9)	1700 (66.9)
	1630 (64.2)	1630 (64.2)	1630 (64.2)	1630 (64.2)	1610 (63.4)	1610 (63.4)
	2850 (112.3)	2850 (112.3)	2850 (112.3)	2850 (112.3)	3085 (121.5)	3085 (121.5)
	1395 (54.9)	1395 (54.9)	1395 (54.9)	1395 (54.9)	1395 (54.9)	1395 (54.9)
10	1410 (55.5)	1410 (55.5)	1410 (55.5)	1410 (55.5)	1410 (55.5)	1410 (55.5)
	1820 (71.7)	1820 (71.7)	1820 (71.7)	1820 (71.7)	1515 (59.6)	1515 (59.6)
	1405 (55.3)	1405 (55.3)	1405 (55.3)	1405 (55.3)	1405 (55.3)	1405 (55.3)
	1165 (45.9)	1165 (45.9)	1165 (45.9)	1165 (45.9)	1140 (44.9), 1115 (43.9)*6	1140 (44.9), 1115 (43.9)*6
	1355 (53.3)	1355 (53.3)	1355 (53.3)	1355 (53.3)	1855 (73.0)	1855 (73.0)
15	1465 (57.7)	1465 (57.7)	1465 (57.7)	1465 (57.7)	1450 (57.1)	1450 (57.1)
	405 (15.9)	405 (15.9)	405 (15.9)	405 (15.9)	405 (15.9)	405 (15.9)
	795 (31.3)	795 (31.3)	795 (31.3)	795 (31.3)	795 (31.3)	795 (31.3)
	1140 (44.9)	1140 (44.9)	1140 (44.9)	1140 (44.9)	1140 (44.9)	1140 (44.9)
	200 (7.9)	200 (7.9)	200 (7.9)	200 (7.9)	200 (7.9)	200 (7.9)
20	27	27	27	27	27	27
	27	27	27	27	27	27
	760 (1676)	765 (1687)	770 (1698)	775 (1709)	770 (1698)	780 (1720)
	625 (1378)	625 (1378)	625 (1378)	625 (1378)	600 (1323)	600 (1323)
	1385 (3053)	1390 (3064)	1395 (3075)	1400 (3086)	1370 (3020)	1380 (3042)
25	970 (2138)	970 (2138)	970 (2138)	970 (2138)	970 (2138)	970 (2138)
	1760 (3880)	1760 (3880)	1760 (3880)	1760 (3880)	1760 (3880)	1760 (3880)
	2730 (6019)	2730 (6019)	2730 (6019)	2730 (6019)	2730 (6019)	2730 (6019)
	66 (14.5)	66 (14.5)	66 (14.5)	66 (14.5)	69 (15.2)	69 (15.2)
	—	—	—	—	—	—
30	170 (106)	170 (106)	170 (106)	170 (106)	170 (106)	170 (106)
	—	—	—	—	—	—
	45 (27)	45 (27)	54 (33)	54 (33)	45 (27)	54 (33)
	83 (51)	83 (51)	112 (69)	112 (69)	83 (51)	112 (69)
	129 (80)	129 (80)	—	—	129 (80)	—
35	170 (105)	170 (105)	—	—	170 (105)	—
	5.8 (17.0)	5.8 (17.0)	5.8 (17.0)	5.8 (17.0)	5.8 (19.0)	5.8 (19.0)
	6.2 (20.3)	6.2 (20.3)	6.2 (20.3)	6.2 (20.3)	6.2 (20.3)	6.2 (20.3)
	3RZ-FE	3RZ-FE	3RZ-FE	3RZ-FE	3RZ-FE	3RZ-FE
	16-Valve, DOHC	16-Valve, DOHC	16-Valve, DOHC	16-Valve, DOHC	16-Valve, DOHC	16-Valve, DOHC
40	95.0 x 95.0 (3.74 x 3.74)	95.0 x 95.0 (3.74 x 3.74)	95.0 x 95.0 (3.74 x 3.74)	95.0 x 95.0 (3.74 x 3.74)	95.0 x 95.0 (3.74 x 3.74)	95.0 x 95.0 (3.74 x 3.74)
	2694 (164.4)	2694 (164.4)	2694 (164.4)	2694 (164.4)	2694 (164.4)	2694 (164.4)
	9.5 : 1	9.5 : 1	9.5 : 1	9.5 : 1	9.5 : 1	9.5 : 1
	EFI	EFI	EFI	EFI	EFI	EFI
	91 or higher	91 or higher	91 or higher	91 or higher	91 or higher	91 or higher
45	108 / 4800 (SAE-NET)	108 / 4800 (SAE-NET)	108 / 4800 (SAE-NET)	108 / 4800 (SAE-NET)	108 / 4800 (SAE-NET)	108 / 4800 (SAE-NET)
	235 / 4000 (SAE-NET)	235 / 4000 (SAE-NET)	235 / 4000 (SAE-NET)	235 / 4000 (SAE-NET)	235 / 4000 (SAE-NET)	235 / 4000 (SAE-NET)
	12-48	12-48	12-48	12-48	12-48	12-48
	840	840	840	840	840	840
	1.2	1.2	1.2	1.2	1.2	1.2
50	Dry, Single Plate Diaphragm	Dry, Single Plate Diaphragm	—	—	Dry, Single Plate Diaphragm	—
	W56	W56	A340E	A340E	W56	A340E
	3.954	3.954	2.804	2.804	3.954	2.804
	2.141	2.141	1.531	1.531	2.141	1.531
	1.384	1.384	1.000	1.000	1.384	1.000
55	0.705	0.705	0.705	0.705	1.000	0.705
	0.850	0.850	—	—	0.850	—
	4.091	4.091	2.393	2.393	4.091	2.393
	—	—	—	—	—	—
	— / 3.727	— / 3.727	— / 3.727	— / 3.727	— / 3.727	— / 3.727
60	— / 8.0	— / 8.0	— / 8.0	— / 8.0	— / 8.0	— / 8.0
	Ventilated Disc	Ventilated Disc	Ventilated Disc	Ventilated Disc	Ventilated Disc	Ventilated Disc
	Leading-Trailing Drum	Leading-Trailing Drum	Leading-Trailing Drum	Leading-Trailing Drum	Leading-Trailing Drum	Leading-Trailing Drum
	Drum	Drum	Drum	Drum	Drum	Drum
	Tandem 7.5" + 7.5"	Tandem 7.5" + 7.5"	Tandem 7.5" + 7.5"	Tandem 7.5" + 7.5"	Tandem 7.5" + 7.5"	Tandem 7.5" + 7.5"
65	LSP & BV	LSP & BV	LSP & BV	LSP & BV	LSP & BV	LSP & BV
	Double Wishbone	Double Wishbone	Double Wishbone	Double Wishbone	Double Wishbone	Double Wishbone
	Leaf Spring	Leaf Spring	Leaf Spring	Leaf Spring	Leaf Spring	Leaf Spring
	Standard	Standard	Standard	Standard	Standard	Standard
	—	—	—	—	—	—
70	Recirculating Ball	Recirculating Ball	Recirculating Ball	Recirculating Ball	Recirculating Ball	Recirculating Ball
	21.2	21.2	21.2	21.2	21.2	21.2
	Integral Type	Integral Type	Integral Type	Integral Type	Integral Type	Integral Type

Item \ Area				Australia			
Body Type				Regular Cab (2WD)	Double Cab (2WD)		Extra Cab (2WD)
Vehicle Grade				DLX		SR	DLX
Model Code				LN147R-TRMDEQ3	LN147R-PRMDEQ	LN147R-PRMSEQ	LN152R-CRMDEQ
Major Dimensions & Vehicle Weights	Overall	Length	mm (in.)	4785 (188.4)	4785 (188.4), 4915 (193.5)[1]	4785 (188.4), 4915 (193.5)*[1]	5030 (198.0), 5160 (203.1)*[1]
		Width	mm (in.)	1700 (66.9)	1700 (66.9)	1700 (66.9)	1700 (66.9)
		Height	mm (in.)	1600 (63.0)	1625 (64.0)	1625 (64.0)	1605 (63.2)
	Wheel Base		mm (in.)	2850 (112.2)	2850 (112.2)	2850 (112.2)	3085 (121.5)
	Tread	Front	mm (in.)	1395 (54.9)	1395 (54.9)	1395 (54.9)	1395 (54.9)
		Rear	mm (in.)	1410 (55.5)	1410 (55.5)	1410 (55.5)	1410 (55.5)
	Room	Length	mm (in.)	1015 (40.0)	1820 (7.17)	1820 (7.17)	1515 (59.6)
		Width	mm (in.)	1405 (55.3)	1405 (55.3)	1405 (55.3)	1405 (55.3)
		Height	mm (in.)	1135 (44.7)	1165 (45.9)	1165 (45.9)	1140 (44.9), 1115 (43.9)*[6]
	Cargo Space	Length	mm (in.)	—	1355 (53.3)	1355 (53.3)	1855 (73.0)
		Width	mm (in.)	—	1465 (57.7)	1465 (57.7)	1450 (57.1)
		Height	mm (in.)	—	405 (15.9)	405 (15.9)	405 (15.9)
	Overhang	Front	mm (in.)	790 (31.1)	790 (31.1)	790 (31.1)	795 (31.3)
		Rear	mm (in.)	1135 (44.7)	1135 (44.7)	1135 (44.7)	1150 (45.2)
	Min. Running Ground Clearance		mm (in.)	200 (7.9)	200 (7.9)	200 (7.9)	200 (7.9)
	Angle of Approach		degrees	37	37	37	25
	Angle of Departure		degrees	35	35	35	25
	Curb Weight	Front	kg (lb)	820 (1808)	830 (1830)	835 (1841)	840 (1852)
		Rear	kg (lb)	455 (1003)	625 (1378)	625 (1378)	600 (1323)
		Total	kg (lb)	1275 (2811)	1455 (3208)	1460 (3219)	1440 (3175)
	Gross Vehicle Weight	Front	kg (lb)	970 (2138)	970 (2138)	970 (2138)	970 (2138)
		Rear	kg (lb)	1760 (3880)	1760 (3880)	1760 (3880)	1760 (3880)
		Total	kg (lb)	2730 (6019)	2730 (6019)	2730 (6019)	2730 (6019)
	Fuel Tank Capacity		ℓ (Imp.gal.)	69 (15.2)	66 (14.5)	66 (14.5)	69 (15.2)
	Luggage Compartment Capacity		m^3 (cu.ft.)	—	—	—	—
Performance	Max. Speed		km / h (mph)	145 (90)	145 (90)	145 (90)	145 (90)
	Max. Cruising Speed		km / h (mph)	—	—	—	—
	Max. Permissible Speed	1st Gear	km / h (mph)	35 (21)	35 (21)	35 (21)	35 (21)
		2nd Gear	km / h (mph)	59 (36)	59 (36)	59 (36)	59 (36)
		3rd Gear	km / h (mph)	95 (59)	95 (59)	95 (59)	95 (59)
		4th Gear	km / h (mph)	138 (85)	138 (85)	138 (85)	138 (85)
	Min. Turning Radius	Tire	m (ft.)	6.1 (20.0)	6.1 (20.0)	6.1 (20.0)	6.0 (19.7)
		Body	m (ft.)	6.6 (21.7)	6.6 (21.7)	6.6 (21.7)	6.5 (21.3)
Engine	Engine Type			5L-E	5L-E	5L-E	5L-E
	Valve Mechanism			8-Valve, OHC	8-Valve, OHC	8-Valve, OHC	8-Valve, OHC
	Bore x Stroke		mm (in.)	99.5 x 96.0 (3.92 x 3.78)	99.5 x 96.0 (3.92 x 3.78)	99.5 x 96.0 (3.92 x 3.78)	99.5 x 96.0 (3.92 x 3.78)
	Displacement		cm^3 (cu.in.)	2986 (182.2)	2986 (182.2)	2986 (182.2)	2986 (182.2)
	Compression Ratio			22.2 : 1	22.2 : 1	22.2 : 1	22.2 : 1
	Fuel System			EFI	EFI	EFI	EFI
	Research Octane No. or Cetane No. (Diesel)			50 or higher	50 or higher	50 or higher	50 or higher
	Max. Output (EEC)		kW / rpm	71 / 4000 (SAE-NET)	71 / 4000 (SAE-NET)	71 / 4000 (SAE-NET)	71 / 4000 (SAE-NET)
	Max. Torque (EEC)		N·m / rpm	200 / 2600 (SAE-NET)	200 / 2600 (SAE-NET)	200 / 2600 (SAE-NET)	200 / 2600 (SAE-NET)
Engine Electrical	Battery Capacity (5HR)		Voltage & Amp. hr.	12-64	12-64	12-64	12-64
	Alternator Output		Watts	660	660	660	660
	Starter Output		kW	2.2	2.2	2.2	2.2
Chassis	Clutch Type			Dry, Single Plate Diaphragm	Dry, Single Plate Diaphragm	Dry, Single Plate Diaphragm	Dry, Single Plate Diaphragm
	Transmission Type			G52	G52	G52	G52
	Transmission Gear Ratio	In First		3.928	3.928	3.928	3.928
		In Second		2.333	2.333	2.333	2.333
		In Third		1.451	1.451	1.451	1.451
		In Fourth		1.000	1.000	1.000	1.000
		In Fifth		0.851	0.851	0.851	0.851
		In Reverse		4.743	4.743	4.743	4.743
	Transfer Gear Ratio H4 / L4			—	—	—	—
	Differential Gear Ratio (Front / Rear)			— / 4.100	— / 4.100	— / 4.100	— / 4.100
	Differential Gear Size (Front / Rear)		in.	— / 8.0	— / 8.0	— / 8.0	— / 8.0
	Brake Type	Front		Ventilated Disc	Ventilated Disc	Ventilated Disc	Ventilated Disc
		Rear		Leading-Trailing Drum	Leading-Trailing Drum	Leading-Trailing Drum	Leading-Trailing Drum
	Parking Brake Type			Drum	Drum	Drum	Drum
	Brake Booster Type and Size		in.	Single 9"	Single 9"	Single 9"	Single 9"
	Proportioning Valve Type			LSP & BV	LSP & BV	LSP & BV	LSP & BV
	Suspension Type	Front		Double Wishbone	Double Wishbone	Double Wishbone	Double Wishbone
		Rear		Leaf Spring	Leaf Spring	Leaf Spring	Leaf Spring
	Stabilizer Bar	Front		—	—	—	—
		Rear		—	—	—	—
	Steering Gear Type			Recirculating Ball	Recirculating Ball	Recirculating Ball	Recirculating Ball
	Steering Gear Ratio (Overall)			21.2	21.2	21.2	21.2
	Power Steering Type			Integral Type	Integral Type	Integral Type	Integral Type

*[1]: With Rear Step Bumper
*[6]: With Moon Roof
*[9]: Transfer in Low

	Australia					
	Regular Cab (4WD)	Double Cab (4WD)	Extra Cab (4WD)		Regular Cab (4WD)	
	DLX					
	LN167R-TRMDEQ3	LN167R-PRMDEQ	LN172R-CRMDEQ	LN172R-CRMDEQ3	KZN165R-TRMDTQ	KZN165R-TRMDTQ3
5	4785 (188.4)	4785 (188.4), 4915 (193.5)*1	5030 (198.0), 5160 (203.1)*1	5030 (198.0), 5160 (203.1)*1	4785 (188.4)	4785 (188.4)
	1700 (66.9)	1700 (66.9)	1700 (66.9)	1700 (66.9)	1700 (66.9)	1700 (66.9)
	1780 (70.1)	1780 (70.1)	1770 (69.7)	1770 (69.7)	1780 (70.1)	1780 (70.1)
	2860 (112.6)	2860 (112.6)	3095 (121.9)	3095 (121.9)	2860 (112.6)	2860 (112.6)
	1440 (56.7)	1440 (56.7)	1440 (56.7)	1440 (56.7)	1440 (56.7)	1440 (56.7)
10	1425 (56.1)	1425 (56.1)	1425 (56.1)	1425 (56.1)	1425 (56.1)	1425 (56.1)
	1015 (40.0)	1820 (71.7)	1515 (59.6)	1515 (59.6)	1015 (40.0)	1015 (40.0)
	1405 (55.3)	1405 (55.3)	1405 (55.3)	1405 (55.3)	1405 (55.3)	1405 (55.3)
	1135 (44.7)	1165 (45.9)	1140 (44.9), 1115 (43.9)*6	1140 (44.9), 1115 (43.9)*6	1135 (44.7)	1135 (44.7)
	—	1355 (53.3)	1855 (73.0)	—	2160 (85.0)	—
15	—	1465 (57.7)	1450 (57.1)	—	1465 (57.7)	—
	—	405 (15.9)	405 (15.9)	—	405 (15.9)	—
	790 (31.1)	790 (31.1)	790 (31.1)	790 (31.1)	790 (31.1)	790 (31.1)
	1135 (44.7)	1135 (44.7)	1145 (45.1)	1145 (45.1)	1135 (44.7)	1135 (44.7)
	225 (8.9)	225 (8.9)	225 (8.9)	225 (8.9)	225 (8.9)	225 (8.9)
20	37	37	36	36	37	37
	35	35	34	34	34	34
	1000 (2205)	1010 (2227)	1030 (2271)	1030 (2271)	1055 (2326)	1055 (2326)
	520 (1146)	690 (1521)	665 (1466)	665 (1466)	635 (1400)	635 (1400)
	1520 (3351)	1700 (3748)	1695 (3737)	1695 (3737)	1690 (3726)	1690 (3726)
25	1170 (2579)	1170 (2579)	1170 (2579)	1170 (2579)	1170 (2579)	1170 (2579)
	1560 (3439)	1560 (3439)	1560 (3439)	1560 (3439)	1560 (3439)	1560 (3439)
	2730 (6019)	2730 (6019)	2730 (6019)	2730 (6019)	2730 (6019)	2730 (6019)
	77 (16.9)	66 (14.5)	77 (16.9)	77 (16.9)	77 (16.9)	77 (16.9)
	—	—	—	—	—	—
30	140 (87)	140 (87)	140 (87)	140 (87)	160 (99)	160 (99)
	—	—	—	—	—	—
	34 (21), 13 (8)*9	34 (21), 13 (8)*9	34 (21), 13 (8)*9	34 (21), 13 (8)*9	36 (22), 14 (8)*9	36 (22), 14 (8)*9
	58 (36), 22 (13)*9	58 (36), 22 (13)*9	58 (36), 22 (13)*9	58 (36), 22 (13)*9	68 (42), 26 (16)*9	68 (42), 26 (16)*9
	94 (58), 36 (22)*9	94 (58), 36 (22)*9	94 (58), 36 (22)*9	94 (58), 36 (22)*9	108 (67), 42 (26)*9	108 (67), 42 (26)*9
35	136 (84), 53 (32)*9	136 (84), 53 (32)*9	136 (84), 53 (32)*9	136 (84), 53 (32)*9	158 (98), 61 (37)*9	158 (98), 61 (37)*9
	6.1 (20.0)	6.1 (20.0)	6.6 (21.7)	6.6 (21.7)	6.1 (20.0)	6.1 (20.0)
	6.6 (21.7)	6.6 (21.7)	7.1 (23.3)	7.1 (23.3)	6.6 (21.7)	6.6 (21.7)
	5L-E	5L-E	5L-E	5L-E	1KZ-TE	1KZ-TE
	8-Valve, OHC	8-Valve, OHC	8-Valve, OHC	8-Valve, OHC	8-Valve, OHC	8-Valve, OHC
40	99.5 x 96.0 (3.92 x 3.78)	99.5 x 96.0 (3.92 x 3.78)	99.5 x 96.0 (3.92 x 3.78)	99.5 x 96.0 (3.92 x 3.78)	96.0 x 103.0 (3.78 x 4.06)	96.0 x 103.0 (3.78 x 4.06)
	2986 (182.2)	2986 (182.2)	2986 (182.2)	2986 (182.2)	2982 (182.0)	2982 (182.0)
	22.2 : 1	22.2 : 1	22.2 : 1	22.2 : 1	21.0 : 1	21.0 : 1
	EFI	EFI	EFI	EFI	EFI	EFI
	50 or higher	50 or higher	50 or higher	50 or higher	50 or higher	50 or higher
45	71 / 4000 (SAE-NET)	71 / 4000 (SAE-NET)	71 / 4000 (SAE-NET)	71 / 4000 (SAE-NET)	85 / 3600	85 / 3600
	200 / 2600 (SAE-NET)	200 / 2600 (SAE-NET)	200 / 2600 (SAE-NET)	200 / 2600 (SAE-NET)	315 / 2000	315 / 2000
	12-64	12-64	12-64	12-64	12-64	12-64
	840	840	840	840	840	840
	2.2	2.2	2.2	2.2	2.2	2.2
50	Dry, Single Plate Diaphragm	Dry, Single Plate Diaphragm	Dry, Single Plate Diaphragm	Dry, Single Plate Diaphragm	Dry, Single Plate Diaphragm	Dry, Single Plate Diaphragm
	G52	G52	G52	G52	R151F	R151F
	3.928	3.928	3.928	3.928	4.313	4.313
	2.333	2.333	2.333	2.333	2.330	2.330
	1.451	1.451	1.451	1.451	1.436	1.436
55	1.000	1.000	1.000	1.000	1.000	1.000
	0.851	0.851	0.851	0.851	0.838	0.838
	4.743	4.743	4.743	4.743	4.220	4.220
	1.000 / 2.566	1.000 / 2.566	1.000 / 2.566	1.000 / 2.566	1.000 / 2.566	1.000 / 2.566
	4.556 / 4.556	4.556 / 4.556	4.556 / 4.556	4.556 / 4.556	3.727 / 3.727	3.727 / 3.727
60	7.5 / 8.0	7.5 / 8.0	7.5 / 8.0	7.5 / 8.0	7.5 / 8.0	7.5 / 8.0
	Ventilated Disc	Ventilated Disc	Ventilated Disc	Ventilated Disc	Ventilated Disc	Ventilated Disc
	Leading-Trailing Drum	Leading-Trailing Drum	Leading-Trailing Drum	Leading-Trailing Drum	Leading-Trailing Drum	Leading-Trailing Drum
	Drum	Drum	Drum	Drum	Drum	Drum
	Single 9”	Single 9”	Single 9”	Single 9”	Tandem 7.5” + 7.5”	Tandem 7.5” + 7.5”
65	LSP & BV	LSP & BV	LSP & BV	LSP & BV	LSP & BV	LSP & BV
	Double Wishbone	Double Wishbone	Double Wishbone	Double Wishbone	Double Wishbone	Double Wishbone
	Leaf Spring	Leaf Spring	Leaf Spring	Leaf Spring	Leaf Spring	Leaf Spring
	Standard	Standard	Standard	Standard	Standard	Standard
	—	—	—	—	—	—
70	Recirculating Ball	Recirculating Ball	Recirculating Ball	Recirculating Ball	Recirculating Ball	Recirculating Ball
	19.6	19.6	19.6	19.6	19.6	19.6
	Integral Type	Integral Type	Integral Type	Integral Type	Integral Type	Integral Type

Item \ Area				Australia			
Body Type				Double Cab (4WD)			Regular Cab (4WD)
Vehicle Grade				DLX	SR	DLX	
Model Code				KZN165R-PRMDTQ	KZN165R-PRMSTQ	KZN165R-PRMDTQ3	VZN167R-TRMDEQ
Major Dimensions & Vehicle Weights	Overall	Length	mm (in.)	4785 (188.4)	4785 (188.4), 4915 (193.5)*1	4785 (188.4)	4785 (188.4), 4915 (193.5)*1
		Width	mm (in.)	1700 (66.9)	1700 (66.9), 1790 (70.5)*3	1700 (66.9)	1700 (66.9)
		Height	mm (in.)	1780 (70.1)	1780 (70.1), 1785 (70.3)*3	1780 (70.1)	1780 (70.1)
	Wheel Base		mm (in.)	2860 (112.6)	2860 (112.6)	2860 (112.6)	2860 (112.6)
	Tread	Front	mm (in.)	1440 (56.7)	1440 (56.7), 1485 (58.5)*3	1440 (56.7)	1440 (56.7)
		Rear	mm (in.)	1425 (56.1)	1425 (56.1), 1470 (57.9)*3	1425 (56.1)	1425 (56.1)
	Room	Length	mm (in.)	1820 (71.7)	1820 (71.7)	1820 (71.7)	1015 (40.0)
		Width	mm (in.)	1405 (55.3)	1405 (55.3)	1405 (55.3)	1405 (55.3)
		Height	mm (in.)	1165 (45.9)	1165 (45.9)	1165 (45.9)	1135 (44.7)
	Cargo Space	Length	mm (in.)	1355 (53.3)	1355 (53.3)	—	2160 (85.0)
		Width	mm (in.)	1465 (57.7)	1465 (57.7)	—	1465 (57.7)
		Height	mm (in.)	405 (15.9)	405 (15.9)	—	405 (15.9)
	Overhang	Front	mm (in.)	790 (31.1)	790 (31.1)	790 (31.1)	790 (31.1)
		Rear	mm (in.)	1135 (44.7)	1135 (44.7)	1135 (44.7)	1135 (44.7)
	Min. Running Ground Clearance		mm (in.)	225 (8.9)	225 (8.9)	225 (8.9)	225 (8.9)
	Angle of Approach		degrees	37	37	—	—
	Angle of Departure		degrees	34	34	—	—
	Curb Weight	Front	kg (lb)	1065 (2348)	1060 (2337)	1065 (2348)	975 (2149)
		Rear	kg (lb)	695 (1532)	685 (1510)	695 (1532)	660 (1455)
		Total	kg (lb)	1760 (3880)	1745 (3847)	1760 (3880)	1635 (3604)
	Gross Vehicle Weight	Front	kg (lb)	1170 (2579)	1170 (2579)	—	—
		Rear	kg (lb)	1560 (3439)	1560 (3439)	—	—
		Total	kg (lb)	2730 (6019)	2730 (6019)	2730 (6019)	2730 (6019)
	Fuel Tank Capacity		ℓ (Imp.gal.)	66 (14.5)	66 (14.5)	66 (14.5)	77 (16.9)
	Luggage Compartment Capacity		m^3 (cu.ft.)	—	—	—	—
Performance	Max. Speed		km / h (mph)	160 (99)	160 (99)	160 (99)	—
	Max. Cruising Speed		km / h (mph)	—	—	—	—
	Max. Permissible Speed	1st Gear	km / h (mph)	36 (22), 14 (8)*9	36 (22), 14 (9)*9	36 (22), 14 (9)*9	38 (23), 15 (9)*9
		2nd Gear	km / h (mph)	68 (42), 26 (16)*9	67 (42), 26 (16)*9	67 (42), 26 (16)*9	71 (44), 28 (17)*9
		3rd Gear	km / h (mph)	108 (67), 42 (26)*9	107 (66), 41 (25)*9	107 (66), 41 (25)*9	115 (71), 45 (28)*9
		4th Gear	km / h (mph)	158 (98), 61 (37)*9	156 (97), 61(38)*9	156 (97), 61(38)*9	165 (103), 65 (40)*9
	Min. Turning Radius	Tire	m (ft.)	6.1 (20.0)	6.1 (20.0)	6.1 (20.0)	6.1 (20.0)
		Body	m (ft.)	6.6 (21.7)	6.6 (21.7)	6.6 (21.7)	6.6 (21.7)
Engine	Engine Type			1KZ-TE	1KZ-TE	1KZ-TE	5VZ-FE
	Valve Mechanism			8-Valve, OHC	8-Valve, OHC	8-Valve, OHC	24-Valve, DOHC
	Bore x Stroke		mm (in.)	96.0 x 103.0 (3.78 x 4.06)	96.0 x 103.0 (3.78 x 4.06)	96.0 x 103.0 (3.78 x 4.06)	93.5 x 82.0 (3.68 x 3.23)
	Displacement		cm^3 (cu.in.)	2982 (182.0)	2982 (182.0)	2982 (182.0)	2982 (182.0)
	Compression Ratio			21.0 : 1	21.0 : 1	21.0 : 1	21.0 : 1
	Fuei System			EFI	EFI	EFI	EFI
	Research Octane No. or Cetane No. (Diesel)			50 or higher	50 or higher	50 or higher	91 or higher
	Max. Output (EEC)		kW / rpm	85 / 3600	85 / 3600 (SAE-NET)	85 / 3600 (SAE-NET)	124 / 4600 (SAE-NET)
	Max. Torque (EEC)		N·m / rpm	315 / 2000	315 / 2000 (SAE-NET)	315 / 2000 (SAE-NET)	291 / 3600 (SAE-NET)
Engine Electrical	Battery Capacity (5HR)		Voltage & Amp. hr.	12-64	12-64	12-64	12-48
	Alternator Output		Watts	840	840	840	840
	Starter Output		kW	2.2	2.2	2.2	1.4
Chassis	Clutch Type			Dry, Single Plate Diaphragm	Dry, Single Plate Diaphragm	Dry, Single Plate Diaphragm	Dry, Single Plate Diaphragm
	Transmission Type			R151F	R151F	R151F	R150F
	Transmission Gear Ratio	In First		4.313	4.313	4.313	3.830
		In Second		2.330	2.330	2.330	2.062
		In Third		1.436	1.436	1.436	1.436
		In Fourth		1.000	1.000	1.000	1.000
		In Fifth		0.838	0.838	0.838	0.838
		In Reverse		4.220	4.220	4.220	4.220
	Transfer Gear Ration H4 / L4			1.000 / 2.566	1.000 / 2.566	1.000 / 2.566	1.000 / 2.566
	Differential Gear Ratio (Front / Rear)			3.727 / 3.727	3.727 / 3.727	3.727 / 3.727	4.100 / 4.100
	Differential Gear Size (Fron /Rear)		in.	7.5 / 8.0	7.5 / 8.0	7.5 / 8.0	7.5 / 8.0V
	Brake Type	Front		Ventilated Disc	Ventilated Disc	Ventilated Disc	Ventilated Disc
		Rear		Leading-Trailing Drum	Leading-Trailing Drum	Leading-Trailing Drum	Leading-Trailing Drum
	Parking Brake Type			Drum	Drum	Drum	Drum
	Brake Booster Type and Size		in.	Tandem 7.5" + 7.5"	Tandem 7.5" + 7.5"	Tandem 7.5" + 7.5"	Tandem 7.5" + 7.5"
	Proportioning Valve Type			LSP & BV	LSP & BV	LSP & BV	LSP & BV
	Suspension Type	Front		Double Wishbone	Double Wishbone	Double Wishbone	Double Wishbone
		Rear		Leaf Spring	Leaf Spring	Leaf Spring	Leaf Spring
	Stabilizer Bar	Front		Standard	Standard	Standard	Standard
		Rear		—	—	—	—
	Steering Gear Type			Recirculating Ball	Recirculating Ball	Recirculating Ball	Recirculating Ball
	Steering Gear Ratio (Overall)			19.6	19.6	19.6	19.6
	Power Steering Type			Integral Type	Integral Type	Integral Type	Integral Type

*1: With Rear Step Bumper
*3: With 255 / 70 R 15 Tire
*6: With Moon Roof
*9: Transfer in Low

Australia					
Regular Cab (4WD)	Double Cab (4WD)				Extra Cab (4WD)
DLX		SR	DLX	SR	DLX
VZN167R-TRMDEQ3	VZN167R-PRMDEQ	VZN167R-PRMSEQ	VZN167R-PRPDEQ	VZN167R-PRPSEQ	VZN172R-CRMDEQ
4785 (188.4)	4785 (188.4), 4915 (193.5)*1	4785 (188.4), 4915 (193.5)*1	4785 (188.4), 4915 (193.5)*1	4785 (188.4), 4915 (193.5)*1	5030 (198.0), 5160 (203.1)*1
1700 (66.9)	1700 (66.9)	1700 (66.9), 1790 (70.5)*3	1700 (66.9)	1700 (66.9), 1790 (70.5)*3	1700 (66.9)
1780 (70.1)	1780 (70.1)	1780 (70.1), 1785 (70.3)*3	1780 (70.1)	1780 (70.1), 1785 (70.3)*3	1780 (70.1)
2860 (112.6)	2860 (112.6)	2860 (112.6)	2860 (112.6)	2860 (112.6)	3095 (121.8)
1440 (56.7)	1440 (56.7)	1440 (56.7), 1485 (58.5)*3	1440 (56.7)	1440 (56.7), 1485 (58.5)*3	1440 (56.7)
1425 (56.1)	1425 (56.1)	1425 (56.1), 1470 (57.9)*3	1425 (56.1)	1425 (56.1), 1470 (57.9)*3	1425 (56.1)
1015 (40.0)	1820 (71.7)	1820 (71.7)	1820 (71.7)	1820 (71.7)	1515 (59.6)
1405 (55.3)	1405 (55.3)	1405 (55.3)	1405 (55.3)	1405 (55.3)	1405 (55.3)
1135 (44.7)	1165 (45.9)	1165 (45.9)	1165 (45.9)	1165 (45.9)	1140 (44.9), 1115 (43.9)*6
—	1355 (53.3)	1355 (53.3)	1355 (53.3)	1355 (53.3)	1855 (73.0)
—	1465 (57.7)	1465 (57.7)	1465 (57.7)	1465 (57.7)	1450 (57.1)
—	405 (15.9)	405 (15.9)	405 (15.9)	405 (15.9)	405 (15.9)
790 (31.1)	790 (31.1)	790 (31.1)	790 (31.1)	790 (31.1)	790 (31.1)
1135 (44.7)	1135 (44.7)	1135 (44.7)	1135 (44.7)	1135 (44.7)	1145 (45.1)
225 (8.9)	225 (8.9)	225 (8.9)	225 (8.9)	225 (8.9)	225 (8.9)
—	—	—	—	—	—
—	—	—	—	—	—
975 (2149)	995 (2194)	995 (2194)	1000 (2205)	1000 (2205)	975 (2149)
660 (1455)	700 (1543)	700 (1543)	700 (1543)	700 (1543)	680 (1499)
1635 (3604)	1695 (3737)	1695 (3737)	1700 (3748)	1700 (3748)	1655 (3649)
—	—	—	—	—	—
—	—	—	—	—	—
2730 (6019)	2730 (6019)	2730 (6019)	2730 (6019)	2730 (6019)	2730 (6019)
77 (16.9)	66 (14.5)	66 (14.5)	66 (14.5)	66 (14.5)	77 (16.9)
—	—	—	—	—	—
—	—	—	—	—	—
—	—	—	—	—	—
38 (23), 15 (9)*9	38 (23), 15 (9)*9	38 (23), 15 (9)*9	59 (36), 23 (14)*9	59 (36), 23 (14)*9	38 (23), 15 (9)*9
71 (44), 28 (17)*9	71 (44), 28 (17)*9	71 (44), 28 (17)*9	108 (66), 42 (26)*9	108 (66), 42 (26)*9	71 (44), 28 (17)*9
115 (71), 45 (28)*9	115 (71), 45 (28)*9	115 (71), 45 (28)*9	—	—	115 (71), 45 (28)*9
165 (103), 65 (40)*9	165 (103), 65 (40)*9	165 (103), 65 (40)*9	—	—	165 (103), 65 (40)*9
6.1 (20.0)	6.1 (20.0)	6.1 (20.0)	6.1 (20.0)	6.1 (20.0)	6.6 (21.7)
6.6 (21.7)	6.6 (21.7)	6.6 (21.7)	6.6 (21.7)	6.6 (21.7)	7.1 (23.3)
5VZ-FE	5VZ-FE	5VZ-FE	5VZ-FE	5VZ-FE	5VZ-FE
24-Valve, DOHC	24-Valve, DOHC	24-Valve, DOHC	24-Valve, DOHC	24-Valve, DOHC	24-Valve, DOHC
93.5 x 82.0 (3.68 x 3.23)	93.5 x 82.0 (3.68 x 3.23)	93.5 x 82.0 (3.68 x 3.23)	93.5 x 82.0 (3.68 x 3.23)	93.5 x 82.0 (3.68 x 3.23)	93.5 x 82.0 (3.68 x 3.23)
3378 (206.1)	3378 (206.1)	3378 (206.1)	3378 (206.1)	3378 (206.1)	3378 (206.1)
9.6 : 1	9.6 : 1	9.6 : 1	9.6 : 1	9.6 : 1	9.6 : 1
EFI	EFI	EFI	EFI	EFI	EFI
91 or higher	91 or higher	91 or higher	91 or higher	91 or higher	91 or higher
124 / 4600 (SAE-NET)	124 / 4600 (SAE-NET)	124 / 4600 (SAE-NET)	124 / 4600 (SAE-NET)	124 / 4600 (SAE-NET)	124 / 4600 (SAE-NET)
291 / 3600 (SAE-NET)	291 / 3600 (SAE-NET)	291 / 3600 (SAE-NET)	291 / 3600 (SAE-NET)	291 / 3600 (SAE-NET)	291 / 3600 (SAE-NET)
12-48	12-48	12-48	12-48	12-48	12-48
840	840	840	840	840	840
1.4	1.4	1.4	1.4	1.4	1.4
Dry, Single Plate Diaphragm	Dry, Single Plate Diaphragm	Dry, Single Plate Diaphragm	—	—	Dry, Single Plate Diaphragm
R150F	R150F	R150F	A340F	A340F	R150F
3.830	3.830	3.830	2.804	2.804	3.830
2.062	2.062	2.062	1.531	1.531	2.062
1.436	1.436	1.436	1.000	1.000	1.436
1.000	1.000	1.000	0.705	0.705	1.000
0.838	0.838	0.838	—	—	0.838
4.220	4.220	4.220	2.393	2.393	4.220
1.000 / 2.566	1.000 / 2.566	1.000 / 2.566	1.000 / 2.566	1.000 / 2.566	1.000 / 2.566
4.100 / 4.100	4.100 / 4.100	4.100 / 4.100	4.100 / 4.100	4.100 / 4.100	4.100 / 4.100
7.5 / 8.0	7.5 / 8.0	7.5 / 8.0	7.5 / 8.0	7.5 / 8.0	7.5 / 8.0
Ventilated Disc	Ventilated Disc	Ventilated Disc	Ventilated Disc	Ventilated Disc	Ventilated Disc
Leading-Trailing Drum	Leading-Trailing Drum	Leading-Trailing Drum	Leading-Trailing Drum	Leading-Trailing Drum	Leading-Trailing Drum
Drum	Drum	Drum	Drum	Drum	Drum
Tandem 7.5" + 7.5"	Tandem 7.5" + 7.5"	Tandem 7.5" + 7.5"	Tandem 7.5" + 7.5"	Tandem 7.5" + 7.5"	Tandem 7.5" + 7.5"
LSP & BV	LSP & BV	LSP & BV	LSP & BV	LSP & BV	LSP & BV
Double Wishbone	Double Wishbone	Double Wishbone	Double Wishbone	Double Wishbone	Double Wishbone
Leaf Spring	Leaf Spring	Leaf Spring	Leaf Spring	Leaf Spring	Leaf Spring
Standard	Standard	Standard	Standard	Standard	Standard
—	—	—	—	—	—
Recirculating Ball	Recirculating Ball	Recirculating Ball	Recirculating Ball	Recirculating Ball	Recirculating Ball
19.6	19.6	19.6	19.6	19.6	19.6
Integral Type	Integral Type	Integral Type	Integral Type	Integral Type	Integral Type

Item \ Area				Australia	G. C. C. Countries		
Body Type				Extra Cab (4WD)	Regular Cab (2WD)		Double Cab (2WD)
Vehicle Grade				DLX	DLX		
Model Code				VZN172R-CRPDEQ	RZN142L-TRMDSV	RZN147L-TRMDSV	RZN147L-PRMDSV
Major Dimensions & Vehicle Weights	Overall	Length	mm (in.)	5030 (198.0), 5160 (203.1)*1	4495 (177.0), 4625 (182.1)*1	4785 (188.4), 4915 (193.5)*1	4785 (188.4), 4915 (193.5)*1
		Width	mm (in.)	1700 (66.9)	1700 (66.9)	1700 (66.9)	1700 (66.9)
		Height	mm (in.)	1780 (70.1)	1620 (63.8)	1620 (63.8)	1660 (65.4)
	Wheel Base		mm (in.)	3095 (121.8)	2615 (103.0)	2850 (112.2)	2850 (112.2)
	Tread	Front	mm (in.)	1440 (56.7)	1405 (55.3)	1405 (55.3)	1405 (55.3)
		Rear	mm (in.)	1425 (56.1)	1420 (55.9)	1420 (55.9)	1420 (55.9)
	Room	Length	mm (in.)	1515 (59.6)	1015 (40.0)	1015 (40.0)	1820 (71.7)
		Width	mm (in.)	1405 (55.3)	1405 (55.3)	1405 (55.3)	1405 (55.3)
		Height	mm (in.)	1140 (44.9), 1115 (43.9)*6	1135 (44.7)	1135 (44.7)	1165 (45.9)
	Cargo Space	Length	mm (in.)	1855 (73.0)	2160 (85.0)	2160 (85.0)	1355 (53.3)
		Width	mm (in.)	1450 (57.1)	1465 (57.7)	1465 (57.7)	1465 (57.7)
		Height	mm (in.)	405 (15.9)	405 (15.9)	405 (15.9)	405 (15.9)
	Overhang	Front	mm (in.)	790 (31.1)	790 (31.1)	790 (31.1)	790 (31.1)
		Rear	mm (in.)	1145 (45.1)	1140 (44.9)	1140 (44.9)	1140 (44.9)
	Min. Running Ground Clearance		mm (in.)	225 (8.9)	190 (7.5)	190 (7.5)	190 (7.5)
	Angle of Approach		degrees	—	27	27	27
	Angle of Departure		degrees	—	27	27	27
	Curb Weight	Front	kg (lb)	990 (2183)	700 (1543)	705 (1554)	720 (1587)
		Rear	kg (lb)	690 (1521)	555 (1224)	575 (1268)	635 (1400)
		Total	kg (lb)	1680 (3704)	1255 (2767)	1280 (2822)	1355 (2987)
	Gross Vehicle Weight	Front	kg (lb)	—	915 (2017)	915 (2017)	915 (2017)
		Rear	kg (lb)	—	1665 (3671)	1665 (3671)	1665 (3671)
		Total	kg (lb)	2730 (6019)	2580 (5688)	2580 (5688)	2580 (5688)
	Fuel Tank Capacity		ℓ (Imp.gal.)	77 (16.9)	56 (12.3)	69 (15.2)	66 (14.5)
	Luggage Compartment Capacity		m^3 (cu.ft.)	—	—	—	—
Performance	Max. Speed		km / h (mph)	—	150 (93)	150 (93)	150 (93)
	Max. Cruising Speed		km / h (mph)	—	—	—	—
	Max. Permissible Speed	1st Gear	km / h (mph)	59 (36), 23 (14)*9	34 (21)	34 (21)	34 (21)
		2nd Gear	km / h (mph)	108 (66), 42 (26)*9	64 (40)	64 (40)	64 (40)
		3rd Gear	km / h (mph)	—	109 (65)	109 (65)	109 (65)
		4th Gear	km / h (mph)	—	148 (92)	148 (92)	148 (92)
	Min. Turning Radius	Tire	m (ft.)	6.6 (21.7)	5.7 (18.7)	5.8 (19.0)	5.8 (19.0)
		Body	m (ft.)	7.1 (23.3)	6.1 (20.0)	6.2 (20.3)	6.2 (20.3)
Engine	Engine Type			5VZ-FE	1RZ	1RZ	1RZ
	Valve Mechanism			24-Valve, DOHC	8-Valve, OHC	8-Valve, OHC	8-Valve, OHC
	Bore x Stroke		mm (in.)	93.5 x 82.0 (3.68 x 3.23)	86.0 x 86.0 (3.39 x 3.39)	86.0 x 86.0 (3.39 x 3.39)	86.0 x 86.0 (3.39 x 3.39)
	Displacement		cm^3 (cu.in.)	3378 (206.1)	1998 (121.9)	1998 (121.9)	1998 (121.9)
	Compression Ratio			9.6 : 1	9.0 : 1	9.0 : 1	9.0 : 1
	Fuel System			EFI	Down Draft 2 Barrel	Down Draft 2 Barrel	Down Draft 2 Barrel
	Research Octane No. or Cetane No. (Diesel)			91 or higher	90 or higher	90 or higher	90 or higher
	Max. Output (EEC)		kW/ rpm	124 / 4600 (SAE-NET)	78 / 5400 (SAE-GROSS)	78 / 5400 (SAE-GROSS)	78 / 5400 (SAE-GROSS)
	Max. Torque (EEC)		N·m / rpm	291 / 3600 (SAE-NET)	170 / 3400 (SAE-GROSS)	170 / 3400 (SAE-GROSS)	170 / 3400 (SAE-GROSS)
Engine Electrical	Battery Capacity (5HR)		Voltage & Amp. hr.	12-48	12-27	12-27	12-27
	Alternator Output		Watts	840	540	540	540
	Starter Output		kW	1.4	1.2	1.2	1.2
Chassis	Clutch Type			—	Dry, Single Plate Diaphragm	Dry, Single Plate Diaphragm	Dry, Single Plate Diaphragm
	Transmission Type			A340F	G54	G54	G54
	Transmission Gear Ratio	In First		2.804	4.452	4.452	4.452
		In Second		1.531	2.398	2.398	2.398
		In Third		1.000	1.414	1.414	1.414
		In Fourth		0.705	1.000	1.000	1.000
		In Fifth		—	0.802	0.802	0.802
		In Reverse		2.393	4.472	4.472	4.472
	Transfer Gear Ratio H4 / L4			1.000 / 2.566	—	—	—
	Differential Gear Ratio (Front / Rear)			4.100 / 4.100	— / 4.454	— / 4.454	— / 4.454
	Differential Gear Size (Front / Rear)		in.	7.5 / 8.0	— / 8.0	— / 8.0	— / 8.0
	Brake Type	Front		Ventilated Disc	Ventilated Disc	Ventilated Disc	Ventilated Disc
		Rear		Leading-Trailing Drum	Leading-Trailing Drum	Leading-Trailing Drum	Leading-Trailing Drum
	Parking Brake Type			Drum	Drum	Drum	Drum
	Brake Booster Type and Size		in.	Tandem 7.5" + 7.5"	Single 9", Tandem 7.5" + 7.5"*10	Single 9", Tandem 7.5" + 7.5"*10	Single 9", Tandem 7.5" + 7.5"*10
	Proportioning Valve Type			LSP & BV	LSPV, LSP & BV*7	LSPV, LSP & BV*7	LSPV, LSP & BV*7
	Suspension Type	Front		Double Wishbone	Double Wishbone	Double Wishbone	Double Wishbone
		Rear		Leaf Spring	Leaf Spring	Leaf Spring	Leaf Spring
	Stabilizer Bar	Front		Standard	Standard	Standard	Standard
		Rear		—	—	—	—
	Steering Gear Type			Recirculating Ball	Recirculating Ball	Recirculating Ball	Recirculating Ball
	Steering Gear Ratio (Overall)			19.6	21.9, 21.2*8	21.9, 21.2*8	21.9, 21.2*8
	Power Steering Type			Integral Type	Integral Type*7	Integral Type*7	Integral Type*7

*1: With Rear Step Bumper
*2: Without Rear Step Bumper
*6: With Moon Roof
*7: Option
*8: With Power Steerin
*9: Transfer in Low
*10: With ABS

G. C. C. Countries					
Regular Cab (2WD)			Double Cab (2WD)		Regular Cab (4WD)
DLX	SR		DLX	SR	DLX
RZN144L-TRMDKV	RZN144L-TRMSKV	RZN149L-TRMSKV	RZN149L-PRMDKV	RZN149L-PRMSKV	RZN169L-TRMDKV
4495 (177.0), 4625 (182.1)*1	4495 (177.0), 4625 (182.1)*1	4785 (188.4), 4915 (193.5)*1	4785 (188.4), 4915 (193.5)*1	4785 (188.4), 4915 (193.5)*1	4915 (193.5), 4785 (188.4)*2
1700 (66.9)	1700 (66.9)	1700 (66.9)	1700 (66.9)	1700 (66.9)	1700 (66.9)
1620 (63.8)	1620 (63.8)	1620 (63.8)	1660 (65.4)	1660 (65.4)	1755 (69.1)
2615 (103.0)	2615 (103.0)	2850 (112.2)	2850 (112.2)	2850 (112.2)	2860 (112.6)
1405 (55.3)	1405 (55.3)	1405 (55.3)	1405 (55.3)	1405 (55.3)	1440 (56.7)
1420 (55.9)	1420 (55.9)	1420 (55.9)	1420 (55.9)	1420 (55.9)	1425 (56.1)
1015 (40.0)	1015 (40.0)	1015 (40.0)	1820 (71.7)	1820 (71.7)	1015 (40.0)
1405 (55.3)	1405 (55.3)	1405 (55.3)	1405 (55.3)	1405 (55.3)	1405 (55.3)
1135 (44.7)	1135 (44.7)	1135 (44.7)	1165 (45.9)	1165 (45.9)	1135 (44.7)
2160 (85.0)	2160 (85.0)	2160 (85.0)	1355 (53.3)	1355 (53.3)	2160 (85.0)
1465 (57.7)	1465 (57.7)	1465 (57.7)	1465 (57.7)	1465 (57.7)	1465 (57.7)
405 (15.9)	405 (15.9)	405 (15.9)	405 (15.9)	405 (15.9)	405 (15.9)
795 (31.3)	795 (31.3)	795 (31.3)	795 (31.3)	795 (31.3)	790 (31.1)
1140 (44.9)	1140 (44.9)	1140 (44.9)	1140 (44.9)	1140 (44.9)	1135 (44.7)
190 (7.5)	190 (7.5)	190 (7.5)	190 (7.5)	190 (7.5)	225 (8.9)
27	27	27	27	27	37
27	27	27	27	27	35
725 (1598)	740 (1631)	745 (1642)	745 (1642)	760 (1676)	895 (1973)
555 (1224)	555 (1224)	575 (1268)	635 (1400)	635 (1400)	620 (1367)
1280 (2822)	1295 (2855)	1320 (2910)	1380 (3042)	1395 (3075)	1515 (3340)
915 (2017)	915 (2017)	915 (2017)	915 (2017)	915 (2017)	1020 (2249)
1665 (3671)	1665 (3671)	1665 (3671)	1665 (3671)	1665 (3671)	1570 (3461)
2580 (5688)	2580 (5688)	2580 (5688)	2580 (5688)	2580 (5688)	2590 (5710)
56 (12.3)	56 (12.3)	56 (12.3)	66 (14.5)	66 (14.5)	77 (16.9)
—	—	—	—	—	—
150 (93)	150 (93)	150 (93)	150 (93)	150 (93)	150 (93)
—	—	—	—	—	—
46 (29)	46 (29)	46 (29)	46 (29)	46 (29)	43 (27)
86 (53)	86 (53)	86 (53)	86 (53)	86 (53)	79 (49)
132 (82)	132 (82)	132 (82)	132 (82)	132 (82)	123 (76)
183 (114)	183 (114)	183 (114)	183 (114)	183 (114)	170 (105)
5.8 (19.0)	5.8 (19.0)	5.8 (19.0)	5.8 (19.0)	5.8 (19.0)	6.1 (20.0)
6.2 (20.3)	6.2 (20.3)	6.2 (20.3)	6.2 (20.3)	6.2 (20.3)	6.6 (21.7)
3RZ-FE	3RZ-FE	3RZ-FE	3RZ-FE	3RZ-FE	3RZ-FE
16-Valves, DOHC	16-Valves, DOHC	16-Valves, DOHC	16-Valves, DOHC	16-Valves, DOHC	16-Valves, DOHC
95.0 x 95.0 (3.74 x 3.74)	95.0 x 95.0 (3.74 x 3.74)	95.0 x 95.0 (3.74 x 3.74)	95.0 x 95.0 (3.74 x 3.74)	95.0 x 95.0 (3.74 x 3.74)	95.0 x 95.0 (3.74 x 3.74)
2694 (164.4)	2694 (164.4)	2694 (164.4)	2694 (164.4)	2694 (164.4)	2694 (164.4)
9.5 : 1	9.5 : 1	9.5 : 1	9.5 : 1	9.5 : 1	9.5 : 1
EFI	EFI	EFI	EFI	EFI	EFI
90 or higher	90 or higher	90 or higher	90 or higher	90 or higher	90 or higher
107 / 4800 (SAE-GROSS)	107 / 4800 (SAE-GROSS)	107 / 4800 (SAE-GROSS)	107 / 4800 (SAE-GROSS)	107 / 4800 (SAE-GROSS)	107 / 4800 (SAE-GROSS)
232 / 4000 (SAE-GROSS)	232 / 4000 (SAE-GROSS)	232 / 4000 (SAE-GROSS)	232 / 4000 (SAE-GROSS)	232 / 4000 (SAE-GROSS)	232 / 4000 (SAE-GROSS)
12-48	12-48	12-48	12-48	12-48	12-48
840	840	840	840	840	840
1.4	1.4	1.4	1.4	1.4	1.4
Dry, Single Plate Diaphragm	Dry, Single Plate Diaphragm	Dry, Single Plate Diaphragm	Dry, Single Plate Diaphragm	Dry, Single Plate Diaphragm	Dry, Single Plate Diaphragm
W56	W56	W56	W56	W56	W56
3.954	3.954	3.954	3.954	3.954	3.954
2.141	2.141	2.141	2.141	2.141	2.141
1.384	1.384	1.384	1.384	1.384	1.384
1.000	1.000	1.000	1.000	1.000	1.000
0.850	0.850	0.850	0.850	0.850	0.850
4.091	4.091	4.091	4.091	4.091	4.091
—	—	—	—	—	1.000 / 2.566
— / 3.769	— / 3.769	— / 3.769	— / 3.769	— / 3.769	4.300 / 4.300
— / 8.0	— / 8.0	— / 8.0	— / 8.0	— / 8.0	7.5 / 8.0
Ventilated Disc	Ventilated Disc	Ventilated Disc	Ventilated Disc	Ventilated Disc	Ventilated Disc
Leading-Trailing Drum	Leading-Trailing Drum	Leading-Trailing Drum	Leading-Trailing Drum	Leading-Trailing Drum	Leading-Trailing Drum
Drum	Drum	Drum	Drum	Drum	Drum
Tandem 7.5" + 7.5"	Tandem 7.5" + 7.5"	Tandem 7.5" + 7.5"	Tandem 7.5" + 7.5"	Tandem 7.5" + 7.5"	Tandem 7.5" + 7.5"
LSPV, LSP & BV*7	LSPV, LSP & BV*7	LSPV, LSP & BV*7	LSPV, LSP & BV*7	LSPV, LSP & BV*7	LSPV, LSP & BV*7
Double Wishbone	Double Wishbone	Double Wishbone	Double Wishbone	Double Wishbone	Double Wishbone
Leaf Spring	Leaf Spring	Leaf Spring	Leaf Spring	Leaf Spring	Leaf Spring
Standard	Standard	Standard	Standard	Standard	Standard
—	—	—	—	—	—
Recirculating Ball	Recirculating Ball	Recirculating Ball	Recirculating Ball	Recirculating Ball	Recirculating Ball
21.9, 21.2*8	21.2	21.2	21.9, 21.2*8	21.2	21.2
Integral Type*7	Integral Type	Integral Type	Integral Type*7	Integral Type	Integral Type

Item \ Area				G. C. C. Countries			
Body Type				Double Cab (4WD)	Regular Cab (2WD)	Double Cab (2WD)	Double Cab (4WD)
Vehicle Grade				DLX			
Model Code				RZN169L-PRMDKV	LN141L-TRMDSV	LN146L-PRMDSV	LN166L-PRMDSV
Major Dimensions & Vehicle Weights	Overall	Length	mm (in.)	4915 (193.5), 4785 (188.4)*2	4495 (177.0), 4625 (182.1)*1	4785 (188.4), 4915 (193.5)*1	4915 (193.5), 4785 (188.4)*2
		Width	mm (in.)	1700 (66.9)	1700 (66.9)	1700 (66.9)	1700 (66.9)
		Height	mm (in.)	1785 (70.3)	1620 (63.8)	1655 (65.2)	1785 (70.3)
	Wheel Base		mm (in.)	2860 (112.6)	2615 (103.0)	2850 (112.2)	2860 (112.6)
	Tread	Front	mm (in.)	1440 (56.7)	1405 (55.3)	1405 (55.3)	1440 (56.7)
		Rear	mm (in.)	1425 (56.1)	1420 (55.9)	1420 (55.9)	1425 (56.1)
	Room	Length	mm (in.)	1820 (71.7)	1015 (40.0)	1820 (71.7)	1820 (71.7)
		Width	mm (in.)	1405 (55.3)	1405 (55.3)	1405 (55.3)	1405 (55.3)
		Height	mm (in.)	1165 (45.9)	1135 (44.7)	1165 (45.9)	1165 (45.9)
	Cargo Space	Length	mm (in.)	1355 (53.3)	2160 (85.0)	1355 (53.3)	1355 (53.3)
		Width	mm (in.)	1405 (55.3)	1465 (57.7)	1465 (57.7)	1465 (57.7)
		Height	mm (in.)	1165 (45.9)	405 (15.9)	405 (15.9)	405 (15.9)
	Overhang	Front	mm (in.)	790 (31.1)	795 (31.3)	795 (31.3)	790 (31.1)
		Rear	mm (in.)	1135 (44.7)	1140 (44.9)	1140 (44.9)	1135 (44.7)
	Min. Running Ground Clearance		mm (in.)	225 (8.9)	225 (8.9)	225 (8.9)	225 (8.9)
	Angle of Approach		degrees	37	27	27	37
	Angle of Departure		degrees	35	27	27	35
	Curb Weight	Front	kg (lb)	910 (2006)	780 (1720)	800 (1764)	965 (2127)
		Rear	kg (lb)	680 (1499)	555 (1224)	635 (1400)	680 (1499)
		Total	kg (lb)	1590 (3505)	1335 (2943)	1435 (3164)	1645 (3627)
	Gross Vehicle Weight	Front	kg (lb)	1020 (2249)	915 (2017)	915 (2017)	1020 (2249)
		Rear	kg (lb)	1570 (3461)	1665 (3671)	1665 (3671)	1570 (3461)
		Total	kg (lb)	2590 (5710)	2580 (5688)	2580 (5688)	2590 (5710)
	Fuel Tank Capacity		ℓ (Imp.gal)	66 (14.5)	56 (12.3)	66 (14.5)	66 (14.5)
	Luggage Compartment Capacity		m^3 (cu.ft.)	—	—	—	—
Performance	Max. Speed		km / h (mph)	150 (93)	145 (90)	145 (90)	140 (87)
	Max. Cruising Speed		km / h (mph)	—	—	—	—
	Max. Permissible Speed	1st Gear	km / h (mph)	43 (27)	36 (22)	36 (22)	32 (20), 14 (9)*9
		2nd Gear	km / h (mph)	79 (49)	60 (37)	60 (37)	54 (34), 24 (15)*9
		3rd Gear	km / h (mph)	123 (76)	97 (60)	97 (60)	88 (55), 38 (24)*9
		4th Gear	km / h (mph)	170 (105)	135 (84)	135 (84)	126 (78), 56 (35)*9
	Min. Turning Radius	Tire	m (ft.)	6.1 (20.0)	5.8 (19.0)	5.8 (19.0)	6.1 (20.0)
		Body	m (ft.)	6.6 (21.7)	6.2 (20.3)	6.2 (20.3)	6.6 (21.7)
Engine	Engine Type			3RZ-FE	3L	3L	3L
	Valve Mechanism			16-Valve, DOHC	8-Valve, OHC	8-Valve, OHC	8-Valve, OHC
	Bore x Stroke		mm (in.)	95.0 x 95.0 (3.74 x 3.74)	96.0 x 96.0 (3.78 x 3.78)	96.0 x 96.0 (3.78 x 3.78)	96.0 x 96.0 (3.78 x 3.78)
	Displacement		cm^3 (cu.in.)	2694 (164.4)	2778 (169.6)	2778 (169.6)	2778 (169.6)
	Compression Ratio			9.5 : 1	22.2 : 1	22.2 : 1	22.2 : 1
	Fuel System			EFI	Distributor Type	Distributor Type	Distributor Type
	Research Octane No. or Cetane No. (Diesel)			90 or higher	50 or higher	50 or higher	50 or higher
	Max. Output (EEC)		kW / rpm	107 / 4800 (SAE-GROSS)	70 / 4000 (SAE-GROSS)	70 / 4000 (SAE-GROSS)	70 / 4000 (SAE-GROSS)
	Max. Torque (EEC)		N·m / rpm	232 / 4000 (SAE-GROSS)	190 / 2400 (SAE-GROSS)	190 / 2400 (SAE-GROSS)	190 / 2400 (SAE-GROSS)
Engine Electrical	Battery Capacity (5HR)		Voltage & Amp. hr.	12-48	12-55	12-55	12-55
	Alternator Output		Watts	840	660	660	660
	Starter Output		kW	1.4	2.0	2.0	2.0
Chassis	Clutch Type			Dry, Single Plate Diaphragm	Dry, Single Plate Diaphragm	Dry, Single Plate Diaphragm	Dry, Single Plate Diaphragm
	Transmission Type			W56	G52	G52	G52
	Transmission Gear Ratio	In First		3.954	3.928	3.928	3.928
		In Second		2.141	2.333	2.333	2.333
		In Third		1.384	1.451	1.451	1.451
		In Fourth		1.000	1.000	1.000	1.000
		In Fifth		0.850	0.851	0.851	0.851
		In Reverse		4.091	4.743	4.743	4.743
	Transfer Gear Ratio H4 / L4			—	—	—	1.000 / 2.566
	Differential Gear Ratio (Front / Rear)			4.300 / 4.300	— / 4.083	— / 4.083	4.556 / 4.556
	Differential Gear Size (Front / Rear)		in.	7.5 / 8.0	— / 8.0	— / 8.0	7.5 / 8.0
	Brake Type	Front		Ventilated Disc	Ventilated Disc	Ventilated Disc	Ventilated Disc
		Rear		Leading-Trailing Drum	Leading-Trailing Drum	Leading-Trailing Drum	Leading-Trailing Drum
	Parking Brake Type			Drum	Drum	Drum	Drum
	Brake Booster Type and Size		in.	Tandem 7.5" + 7.5"	Single 9"	Single 9"	Single 9"
	Proportioning Valve Type			LSPV, LSP & BV*7	LSPV, LSP & BV*7	LSPV, LSP & BV*7	LSPV, LSP & BV*7
	Suspension Type	Front		Double Wishbone	Double Wishbone	Double Wishbone	Double Wishbone
		Rear		Leaf Spring	Leaf Spring	Leaf Spring	Leaf Spring
	Stabilizer Bar	Front		Standard	—	—	Standard
		Rear		—	—	—	—
	Steering Gear Type			Recirculating Ball	Recirculating Ball	Recirculating Ball	Recirculating Ball
	Steering Gear Ratio (Overall)			21.2	21.9, 21.2*8	21.9, 21.2*8	21.2
	Power Steering Type			Integral Type	Integral Type*7	Integral Type*7	Integral Type

*1: With Rear Step Bumper
*2: Without Rear Step Bumper
*7: Option
*8: With Power Steering
*9: Transfer in Low
*11: Models for China

	General Countries					
	Regular Cab (2WD)			Double Cab (2WD)		Regular Cab (2WD)
	DLX					
	RZN142L-TRMDS	RZN147R-TRMDS	RZN147L-TRMDS	RZN147R-PRMDS	RZN147L-PRMDS	RZN148L-TRMDK
5	4495 (177.0), 4625 (182.1)*1	4785 (188.4), 4915 (193.5)*1	4785 (188.4), 4915 (193.5)*1	4785 (188.4), 4915 (193.5)*1	4785 (188.4), 4915 (193.5)*1	4785 (188.4), 4915 (193.5)*1
	1700 (66.9)	1700 (66.9)	1700 (66.9)	1700 (66.9)	1700 (66.9)	1700 (66.9)
	1600 (63.0)	1605 (63.2)	1605 (63.2)	1630 (64.2)	1630 (64.2)	1625 (64.0)
	2615 (103.0)	2850 (112.2)	2850 (112.2)	2850 (112.2)	2850 (112.2)	2850 (112.2)
	1395 (54.9)	1395 (54.9)	1395 (54.9)	1395 (54.9)	1395 (54.9)	1405 (55.3)
10	1410 (55.5)	1410 (55.5)	1410 (55.5)	1410 (55.5)	1410 (55.5)	1420 (55.9)
	1015 (40.0)	1015 (40.0)	1015 (40.0)	1820 (71.7)	1820 (71.7)	1015 (40.0)
	1405 (55.3)	1405 (55.3)	1405 (55.3)	1405 (55.3)	1405 (55.3)	1405 (55.3)
	1135 (44.7)	1135 (44.7)	1135 (44.7)	1165 (45.9)	1165 (45.9)	1135 (44.7)
	2160 (85.0)	2160 (85.0)	2160 (85.0)	1355 (53.3)	1355 (53.3)	2160 (85.0)
15	1465 (57.7)	1465 (57.7)	1465 (57.7)	1465 (57.7)	1465 (57.7)	1465 (57.7)
	405 (15.9)	405 (15.9)	405 (15.9)	405 (15.9)	405 (15.9)	405 (15.9)
	795 (31.3)	795 (31.3)	795 (31.3)	795 (31.3)	795 (31.3)	795 (31.3)
	1140 (44.9)	1140 (44.9)	1140 (44.9)	1140 (44.9)	1140 (44.9)	1140 (44.9)
	190 (7.5)	190 (7.5)	190 (7.5)	190 (7.5)	190 (7.5)	190 (7.5)
20	27	27	27	27	27	27
	27	27	27	27	27	27
	680 (1499)	710 (1565)	710 (1565)	725 (1598)	725 (1598)	735 (1620)
	525 (1157)	555 (1224)	555 (1224)	615 (1356)	615 (1356)	565 (1246)
	1206 (2657)	1265 (2789)	1265 (2789)	1340 (2954)	1340 (2954)	1300 (2866)
25	—	—	—	—	—	—
	—	—	—	—	—	—
	2580 (5688)	2580 (5688)	2580 (5688)	2580 (5688)	2580 (5688)	2580 (5688)
	56 (12.3)	69 (15.2)	69 (15.2)	66 (14.5)	66 (14.5)	69 (15.2)
	—	—	—	—	—	—
30	150 (9.3)	150 (9.3)	150 (9.3)	150 (9.3)	150 (9.3)	150 (9.3)
	—	—	—	—	—	—
	34 (21)	34 (21)	34 (21)	34 (21)	34 (21)	42 (29)
	64 (40)	64 (40)	64 (40)	64 (40)	64 (40)	86 (53)
	109 (65)	109 (65)	109 (65)	109 (65)	109 (65)	133 (83)
35	148 (92)	148 (92)	148 (92)	148 (92)	148 (92)	175 (109)
	5.8 (19.0)	5.8 (19.0)	5.8 (19.0)	5.8 (19.0)	5.8 (19.0)	5.8 (19.0)
	6.2 (20.3)	6.2 (20.3)	6.2 (20.3)	6.2 (20.3)	6.2 (20.3)	6.2 (20.3)
	1RZ	1RZ	1RZ	1RZ	1RZ	2RZ-FE
	8-Valve, OHC	8-Valve, OHC	8-Valve, OHC	8-Valve, OHC	8-Valve, OHC	16-Valve, DOHC
40	86.0 x 86.0 (3.39 x3.39)	86.0 x 86.0 (3.39 x 3.39)	86.0 x 86.0 (3.39 x3.39)	86.0 x 86.0 (3.39 x3.39)	86.0 x 86.0 (3.39 x3.39)	95.0 x 86.0 (3.74 x 3.39)
	1998 (121.9)	1998 (121.9)	1998 (121.9)	1998 (121.9)	1998 (121.9)	2438 (148.8)
	9.0 : 1	9.0 : 1	9.0 : 1	9.0 : 1	9.0 : 1	9.5 : 1
	Down Draft 2 Barrel	Down Draft 2 Barrel	Down Draft 2 Barrel	Down Draft 2 Barrel	Down Draft 2 Barrel	EFI
	90	90	90	90	90	91 or higher
45	65/5000, 73/5000*11 (SAE-NET)	65/5000, 73/5000*11 (SAE-NET)	65/5000, 73/5000*11 (SAE-NET)	65/5000, 73/5000*11 (SAE-NET)	65/5000, 73/5000*11 (SAE-NET)	103/5000
	162/200, 163/3400*11 (SAE-NET)	162/200, 163/3400*11 (SAE-NET)	162/200, 163/3400*11 (SAE-NET)	162/200, 163/3400*11 (SAE-NET)	162/200, 163/3400*11 (SAE-NET)	212/4000
	12-27	12-27	12-27	12-27	12-27	12-48
	540	540	540	540	540	840
	1.2	1.2	1.2	1.2	1.2	1.2
50	Dry, Single Plate Diaphragm	Dry, Single Plate Diaphragm	Dry, Single Plate Diaphragm	Dry, Single Plate Diaphragm	Dry, Single Plate Diaphragm	Dry, Single Plate Diaphragm
	G54	G54	G54	G54	G54	W56
	4.452	4.452	4.452	4.452	4.452	3.954
	2.398	2.398	2.398	2.398	2.398	2.141
	1.414	1.414	1.414	1.414	1.414	1.384
55	1.000	1.000	1.000	1.000	1.000	1.000
	0.802	0.802	0.802	0.802	0.802	0.850
	4.472	4.472	4.472	4.472	4.472	4.091
	—	—	—	—	—	—
	—/4.100	—/4.100	—/4.100	—/4.100	—/4.100	—/3.727
60	—/8.0	—/8.0	—/8.0	—/8.0	—/8.0	—/8.0
	Ventilated Disc	Ventilated Disc	Ventilated Disc	Ventilated Disc	Ventilated Disc	Ventilated Disc
	Leading-Trailing Drum	Leading-Trailing Drum	Leading-Trailing Drum	Leading-Trailing Drum	Leading-Trailing Drum	Leading-Trailing Drum
	Drum	Drum	Drum	Drum	Drum	Drum
	Single 9”	Single 9”	Single 9”	Single 9”	Single 9”	Tandem 7.5” + 7.5”
65	Blend Valve	Blend Valve	Blend Valve	Blend Valve	Blend Valve	Blend Valve, LSPV*11
	Double Wishbone	Double Wishbone	Double Wishbone	Double Wishbone	Double Wishbone	Double Wishbone
	Leaf Spring	Leaf Spring	Leaf Spring	Leaf Spring	Leaf Spring	Leaf Spring
	Standard	Standard	Standard	Standard	Standard	Standard
	—	—	—	—	—	—
70	Recirculating Ball	Recirculating Ball	Recirculating Ball	Recirculating Ball	Recirculating Ball	Recirculating Ball
	21.9, 21.2*8	21.9, 21.2*8	21.9, 21.2*8	21.9, 21.2*8	21.9, 21.2*8	21.9, 21.2*8
	Integral Type*7	Integral Type*7	Integral Type*7	Integral Type*7	Integral Type*7	Integral Type*7

Item \ Area				General Countries			
Body Type				Double Cab (2WD)			Regular Cab (4WD)
Vehicle Grade				DLX	SR	DLX	
Model Code				RZN148L-PRMDK	RZN148L-PRMSK	RZN193L-PRMDK	RZN168L-TRMDK
Major Dimensions & Vehicle Weights	Overall	Length	mm (in.)	4785 (188.4), 4915 (193.5)*1	4785 (188.4), 4915 (193.5)*1	4785 (188.4), 4915 (193.5)*1	4785 (188.4), 4915 (193.5)*1
		Width	mm (in.)	1700 (66.9)	1700 (66.9)	1700 (66.9)	1700 (66.9)
		Height	mm (in.)	1650 (65.0)	1650 (65.0)	1795 (70.7)	1765 (69.5)
	Wheel Base		mm (in.)	2850 (112.2)	2850 (112.2)	2860 (112.6)	2860 (112.6)
	Tread	Front	mm (in.)	1405 (55.3)	1405 (55.3)	1440 (56.7)	1440 (56.7)
		Rear	mm (in.)	1405 (55.3)	1420 (55.9)	1425 (56.1)	1425 (56.1)
	Room	Length	mm (in.)	1820 (71.7)	1820 (71.7)	1820 (71.7)	1015 (40.0)
		Width	mm (in.)	1405 (55.3)	1405 (55.3)	1405 (55.3)	1405 (55.3)
		Height	mm (in.)	1165 (45.9)	1165 (45.9)	1165 (45.9)	1135 (44.7)
	Cargo Space	Length	mm (in.)	1335 (53.3)	1335 (53.3)	1335 (53.3)	2160 (85.0)
		Width	mm (in.)	1465 (57.7)	1465 (57.7)	1465 (57.7)	1465 (57.7)
		Height	mm (in.)	405 (15.9)	405 (15.9)	405 (15.9)	405 (15.9)
	Overhang	Front	mm (in.)	795 (31.3)	795 (31.3)	795 (31.3)	790 (31.1)
		Rear	mm (in.)	1140 (44.9)	1140 (44.9)	1140 (44.9)	1135 (44.7)
	Min. Running Ground Clearance		mm (in.)	190 (7.5)	190 (7.5)	225 (8.9)	225 (8.9)
	Angle of Approach		degrees	27	27	27	37
	Angle of Departure		degrees	27	27	27	35
	Curb Weight	Front	kg (lb)	750 (1653)	765 (1687)	815 (1797)	890 (1962)
		Rear	kg (lb)	625 (1378)	630 (1389)	660 (1455)	620 (1367)
		Total	kg (lb)	1375 (3031)	1395 (3075)	1475 (3252)	1510 (3329)
	Gross Vehicle Weight	Front	kg (lb)	—	—	—	—
		Rear	kg (lb)	—	—	—	—
		Total	kg (lb)	2580 (5688)	2580 (5688)	2580 (5688)	2580 (5688)
	Fuel Tank Capacity		ℓ (Imp.gal)	66 (14.5)	66 (14.5)	66 (14.5)	77 (16.9)
	Luggage Compartment Capacity		m^3 (cu.ft.)	—	—	—	—
Performance	Max. Speed		km / h (mph)	150 (9.3)	150 (9.3)	150 (9.3)	150 (9.3)
	Max. Cruising Speed		km / h (mph)	—	—	—	—
	Max. Permissible Speed	1st Gear	km / h (mph)	46 (29)	46 (29)	46 (29)	43 (27), 17 (11)*9
		2nd Gear	km / h (mph)	86 (53)	86 (53)	86 (53)	80 (50), 31 (19)*9
		3rd Gear	km / h (mph)	133 (83)	133 (83)	133 (83)	124 (77), 48 (30)*9
		4th Gear	km / h (mph)	175 (109)	175 (109)	175 (109)	159 (99), 67 (42)*9
	Min. Turning Radius	Tire	m (ft.)	5.8 (19.0)	5.8 (19.0)	5.8 (19.0)	6.1 (20.0)
		Body	m (ft.)	6.2 (20.3)	6.2 (20.3)	6.2 (20.3)	6.6 (21.7)
Engine	Engine Type			2RZ-FE	2RZ-FE	2RZ-FE	2RZ-FE
	Valve Mechanism			16-Valve, DOHC	16-Valve, DOHC	16-Valve, DOHC	16-Valve, DOHC
	Bore x Stroke		mm (in.)	95.0 x 86.0 (3.74 x 3.39)	95.0 x 86.0 (3.74 x 3.39)	95.0 x 86.0 (3.74 x 3.39)	95.0 x 86.0 (3.74 x 3.39)
	Displacement		cm^3 (cu.in.)	2438 (148.8)	2438 (148.8)	2438 (148.8)	2438 (148.8)
	Compression Ratio			9.5 : 1	9.5 : 1	9.5 : 1	9.5 : 1
	Fuel System			EFI	EFI	EFI	EFI
	Research Octane No. or Cetane No. (Diesel)			91 or higher	91 or higher	91 or higher	91 or higher
	Max. Output (EEC)		kW / rpm	103 / 5000	103 / 5000	103 / 5000	103 / 5000
	Max. Torque (EEC)		N·m / rpm	212 / 4000	212 / 4000	212 / 4000	212 / 4000
Engine Electrical	Battery Capacity (5HR)		Voltage & Amp. hr.	12-48	12-48	12-48	12-48
	Alternator Output		Watts	840	840	840	840
	Starter Output		kW	1.2	1.2	1.2	1.2
Chassis	Clutch Type			Dry, Single Plate Diaphragm	Dry, Single Plate Diaphragm	Dry, Single Plate Diaphragm	Dry, Single Plate Diaphragm
	Transmission Type			W56	W56	W56	W56
	Transmission Gear Ratio	In First		3.954	3.954	3.954	3.954
		In Second		2.141	2.141	2.141	2.141
		In Third		1.384	1.384	1.384	1.384
		In Fourth		1.000	1.000	1.000	1.000
		In Fifth		0.850	0.850	0.850	0.850
		In Reverse		4.091	4.091	4.091	4.091
	Transfer Gear Ratio H4 / L4			—	—	—	1.000 / 2.566
	Differential Gear Ratio (Front / Rear)			— / 3.727	— / 3.727	— / 4.300	4.300 / 4.300
	Differential Gear Size (Front / Rear)		in.	— / 8.0	— / 8.0	— / 8.0	7.5 / 8.0
	Brake Type	Front		Ventilated Disc	Ventilated Disc	Ventilated Disc	Ventilated Disc
		Rear		Leading-Trailing Drum	Leading-Trailing Drum	Leading-Trailing Drum	Leading-Trailing Drum
	Parking Brake Type			Drum	Drum	Drum	Drum
	Brake Booster Type and Size		in.	Tandem 7.5" + 7.5"	Tandem 7.5" + 7.5"	Tandem 7.5" + 7.5"	Tandem 7.5" + 7.5"
	Proportioning Valve Type			Blend Valve, LSPV*11	Blend Valve, LSPV*11	Blend Valve	Blend Valve
	Suspension Type	Front		Double Wishbone	Double Wishbone	Double Wishbone	Double Wishbone
		Rear		Leaf Spring	Leaf Spring	Leaf Spring	Leaf Spring
	Stabilizer Bar	Front		Standard	Standard	Standard	Standard
		Rear		—	—	—	—
	Steering Gear Type			Recirculating Ball	Recirculating Ball	Recirculating Ball	Recirculating Ball
	Steering Gear Ratio (Overall)			21.9, 21.2*8	21.2	21.2	19.6
	Power Steering Type			Integral Type*7	Integral Type	Integral Type	Integral Type

*1: With Rear Step Bumper
*3: With 255 / 70 R 16 Tire
*7: Option
*8: With Power Steering
*9: Transfer inLow
*11: Models for China

	General Countries					
	Double Cab (4WD)		Extra Cab (2WD)	Regular Cab (4WD)		Double Cab (4WD)
	DLX	SR	DLX			
	RZN168L-PRMDK	RZN168L-PRMSK	RZN154L-CRMDK	RZN169R-TRMDK	RZN169L-TRMDK	RZN169R-PRMDK
5	4785 (188.4), 4915 (193.5)*1	4785 (188.4), 4915 (193.5)*1	5030 (198.0), 5160 (203.1)*1	4785 (188.4), 4915 (193.5)*1	4785 (188.4), 4915 (193.5)*1	4785 (188.4), 4915 (193.5)*1
	1700 (66.9)	1700 (66.9)	1700 (66.9)	1700 (66.9)	1700 (66.9)	1700 (66.9), 1790 (70.5)*3
	1795 (70.7)	1795 (70.7)	1610 (63.4)	1770 (69.7)	1770 (69.7)	1800 (70.9), 1795 (70.7)*3
	2860 (112.6)	2860 (112.6)	3085 (121.5)	2860 (112.6)	2860 (112.6)	2860 (112.6)
	1440 (56.7)	1440 (56.7)	1395 (54.9)	1440 (56.7)	1440 (56.7)	1440 (56.7), 1485 (58.5)*3
10	1425 (56.1)	1425 (56.1)	1410 (55.5)	1425 (56.1)	1425 (56.1)	1425 (56.1)
	1820 (71.7)	1820 (71.7)	1515 (59.6)	1015 (40.0)	1015 (40.0)	1820 (71.7)
	1405 (55.3)	1405 (55.3)	1405 (55.3)	1405 (55.3)	1405 (55.3)	1405 (55.3)
	1165 (45.9)	1165 (45.9)	1140 (44.9)	1135 (44.7)	1135 (44.7)	1165 (45.9)
	1355 (53.3)	1355 (53.3)	1855 (73.0)	2160 (85.0)	2160 (85.0)	1335 (53.3)
15	1465 (57.7)	1465 (57.7)	1465 (57.7)	1465 (57.7)	1465 (57.7)	1465 (57.7)
	405 (15.9)	405 (15.9)	405 (15.9)	405 (15.9)	405 (15.9)	405 (15.9)
	795 (31.3)	795 (31.3)	795 (31.3)	790 (31.1)	790 (31.1)	790 (31.1)
	1135 (44.9)	1135 (44.9)	1140 (44.9)	1135 (44.7)	1135 (44.7)	1135 (44.7)
	225 (8.9)	225 (8.9)	190 (7.5)	225 (8.9)	225 (8.9)	225 (8.9)
20	37	37	27	37	37	37
	35	35	27	35	35	35
	905 (1995)	910 (2006)	755 (1664)	890 (1962)	890 (1962)	905 (1995)
	680 (1499)	685 (1510)	590 (1301)	620 (1367)	620 (1367)	680 (1499)
	1585 (3494)	1595 (3516)	1345 (2965)	1510 (3329)	1510 (3329)	1585 (3494)
25	—	—	—	—	—	—
	—	—	—	—	—	—
	2580 (5688)	2590 (5710)	2580 (5688)	2590 (5710)	2590 (5710)	2590 (5710)
	66 (14.5)	66 (14.5)	69 (15.2)	77 (16.39)	77 (16.39)	66 (14.5)
	—	—	—	—	—	—
30	150 (93)	150 (93)	150 (93)	150 (93)	150 (93)	150 (93)
	—	—	—	—	—	—
	43 (27), 17 (11)*9	43 (27), 17 (11)*9	45 (28)	43 (27), 16 (10)*9	43 (27), 16 (10)*9	43 (27), 16 (10)*9
	80 (50), 31 (19)*9	80 (50), 31 (19)*9	83 (52)	79 (49), 30 (19)*9	79 (49), 30 (19)*9	79 (49), 30 (19)*9
	124 (77), 48 (30)*9	124 (77), 48 (30)*9	129 (80)	123 (76), 47 (29)*9	123 (76), 47 (29)*9	123 (76), 47 (29)*9
35	159 (99), 67 (42)*9	159 (99), 67 (42)*9	179 (111)	170 (105), 65 (40)*9	170 (105), 65 (40)*9	170 (105), 65 (40)*9
	6.1 (20.0)	6.1 (20.0)	5.8 (19.0)	6.1 (20.0)	6.1 (20.0)	6.1 (20.0)
	6.6 (21.7)	6.6 (21.7)	6.2 (20.3)	6.6 (21.7)	6.6 (21.7)	6.6 (21.7)
	2RZ-FE	2RZ-FE	3RZ-FE	3RZ-FE	3RZ-FE	3RZ-FE
	16-Valve, DOHC	16-Valve, DOHC	16-Valve, DOHC	16-Valve, DOHC	16-Valve, DOHC	16-Valve, DOHC
40	95.0 x 86.0 (3.74 x 3.39)	95.0 x 86.0 (3.74 x 3.39)	95.0 x 95.0 (3.74 x 3.74)	95.0 x 95.0 (3.74 x 3.74)	95.0 x 95.0 (3.74 x 3.74)	95.0 x 95.0 (3.74 x 3.74)
	2438 (148.8)	2438 (148.8)	2694 (164.4)	2694 (164.4)	2694 (164.4)	2694 (164.4)
	9.5 : 1	9.5 : 1	9.5 : 1	9.5 : 1	9.5 : 1	9.5 : 1
	EFI	EFI	EFI	EFI	EFI	EFI
	91 or higher	91 or higher	91 or higher	91 or higher	91 or higher	91 or higher
45	103 / 5000	103 / 5000	—	—	—	—
	212 / 4000	212 / 4000	—	—	—	—
	12-48	12-48	12-48	12-48	12-48	12-48
	840	840	840	840	840	840
	1.2	1.2	1.2	1.2	1.2	1.2
50	Dry, Single Plate Diaphragm	Dry, Single Plate Diaphragm	Dry, Single Plate Diaphragm	Dry, Single Plate Diaphragm	Dry, Single Plate Diaphragm	Dry, Single Plate Diaphragm
	W56	W56	W56	W56	W56	W56
	3.954	3.954	3.954	3.954	3.954	3.954
	2.141	2.141	2.141	2.141	2.141	2.141
	1.384	1.384	1.384	1.384	1.384	1.384
55	1.000	1.000	1.000	1.000	1.000	1.000
	0.850	0.850	0.850	0.850	0.850	0.850
	4.091	4.091	4.091	4.091	4.091	4.091
	1.000 / 2.566	1.000 / 2.566	—	1.000 / 2.566	1.000 / 2.566	1.000 / 2.566
	4.300 / 4.300	4.300 / 4.300	— / 3.727	4.300 / 4.300	4.300 / 4.300	4.300 / 4.300
60	7.5 / 8.0	7.5 / 8.0	— / 8.0	7.5 / 8.0	7.5 / 8.0	7.5 / 8.0
	Ventilated Disc	Ventilated Disc	Ventilated Disc	Ventilated Disc	Ventilated Disc	Ventilated Disc
	Leading-Trailing Drum	Leading-Trailing Drum	Leading-Trailing Drum	Leading-Trailing Drum	Leading-Trailing Drum	Leading-Trailing Drum
	Drum	Drum	Drum	Drum	Drum	Drum
	Tandem 7.5" + 7.5"	Tandem 7.5" + 7.5"	Tandem 7.5" + 7.5"	Tandem 7.5" + 7.5"	Tandem 7.5" + 7.5"	Tandem 7.5" + 7.5"
65	Blend Valve, LSPV*11	Blend Valve, LSPV*11	Blend Valve	Blend Valve	Blend Valve	Blend Valve
	Double Wishbone	Double Wishbone	Double Wishbone	Double Wishbone	Double Wishbone	Double Wishbone
	Leaf Spring	Leaf Spring	Leaf Spring	Leaf Spring	Leaf Spring	Leaf Spring
	Standard	Standard	Standard	Standard	Standard	Standard
	—	—	—	—	—	—
70	Recirculating Ball	Recirculating Ball	Recirculating Ball	Recirculating Ball	Recirculating Ball	Recirculating Ball
	19.6	19.6	21.2	19.6	19.6	19.6
	Integral Type	Integral Type	Integral Type	Integral Type	Integral Type	Integral Type

Item \ Area				General Countries			
Body Type				Double Cab (4WD)		Regular Cab (2WD)	
Vehicle Grade				DLX	SR	DLX	
Model Code				RZN169L-PRMDK	RZN169L-PRMSK	LN145R-TRMDS	LN145L-TRMDS
Major Dimensions & Vehicle Weights	Overall	Length	mm (in.)	4785 (188.4), 4915 (193.5)*1	4785 (188.4), 4915 (193.5)*1	4785 (188.4), 4915 (193.5)*1	4785 (188.4), 4915 (193.5)*1
		Width	mm (in.)	1700 (66.9), 1790 (70.5)*3	1700 (66.9), 1790 (70.5)*3	1700 (66.9)	1700 (66.9)
		Height	mm (in.)	1800 (70.9), 1795 (70.7)*3	1800 (70.9), 1795 (70.7)*3	1615 (63.6), 1600 (63.0)*5	1615 (63.6), 1600 (63.0)*5
	Wheel Base		mm (in.)	2860 (112.6)	2860 (112.6)	2850 (112.2)	2850 (112.2)
	Tread	Front	mm (in.)	1440 (56.7), 1485 (58.5)*3	1440 (56.7), 1485 (58.5)*3	1395 (54.9)	1395 (54.9)
		Rear	mm (in.)	1425 (56.1), 1470 (57.9)*3	1425 (56.1), 1470 (57.9)*3	1410 (55.5)	1410 (55.5)
	Room	Length	mm (in.)	1820 (71.7)	1820 (71.7)	1015 (40.0)	1015 (40.0)
		Width	mm (in.)	1405 (55.3)	1405 (55.3)	1405 (55.3)	1405 (55.3)
		Height	mm (in.)	1165 (45.9)	1165 (45.9)	1135 (44.7)	1135 (44.7)
	Cargo Space	Length	mm (in.)	1355 (53.3)	1355 (53.3)	2160 (85.0)	2160 (85.0)
		Width	mm (in.)	1465 (57.7)	1465 (57.7)	1465 (57.7)	1465 (57.7)
		Height	mm (in.)	405 (15.9)	405 (15.9)	405 (15.9)	405 (15.9)
	Overhang	Front	mm (in.)	790 (31.1)	790 (31.1)	795 (31.3)	795 (31.3)
		Rear	mm (in.)	1135 (44.7)	1135 (44.7)	1140 (44.9)	1140 (44.9)
	Min. Running Ground Clearance		mm (in.)	225 (8.9)	225 (8.9)	190 (7.5)	190 (7.5)
	Angle of Approach		degrees	37	37	27	27
	Angle of Departure		degrees	35	35	27	27
	Curb Weight	Front	kg (lb)	905 (1995)	905 (1995)	800 (1764)	800 (1764)
		Rear	kg (lb)	680 (1499)	685 (1510)	565 (1246)	565 (1246)
		Total	kg (lb)	1585 (3494)	1595 (3516)	1365 (3009)	1365 (3009)
	Gross Vehicle Weight	Front	kg (lb)	—	—	—	—
		Rear	kg (lb)	—	—	—	—
		Total	kg (lb)	2590 (5710)	2590 (5710)	2580 (5688)	2580 (5688)
	Fuel Tank Capacity		ℓ (Imp.gal)	66 (14.5)	66 (14.5)	69 (15.2)	69 (15.2)
	Luggage Compartment Capacity		m^3 (cu.ft.)	—	—	—	—
Performance	Max. Speed		km / h (mph)	150 (93)	150 (93)	145 (90)	145 (90)
	Max. Cruising Speed		km / h (mph)	—	—	—	—
	Max. Permissible Speed	1st Gear	km / h (mph)	43 (27), 16 (10)*9	43 (27), 16 (10)*9	35 (22)	35 (22)
		2nd Gear	km / h (mph)	79 (49), 30 (19)*9	79 (49), 30 (19)*9	60 (37)	60 (37)
		3rd Gear	km / h (mph)	123 (76), 47 (29)*9	123 (76), 47 (29)*9	97 (60)	97 (60)
		4th Gear	km / h (mph)	170 (105), 65 (40)*9	170 (105), 65 (40)*9	131 (81)	131 (81)
	Min. Turning Radius	Tire	m (ft.)	6.1 (20.0)	6.1 (20.0)	5.8 (19.0)	5.8 (19.0)
		Body	m (ft.)	6.6 (21.7)	6.6 (21.7)	6.2 (20.3)	6.2 (20.3)
Engine	Engine Type			3RZ-FE	3RZ-FE	2L	2L
	Valve Mechanism			16-Valve, DOHC	16-Valve, DOHC	8-Valve, OHC	8-Valve, OHC
	Bore x Stroke		mm (in.)	95.0 x 95.0 (3.74 x 3.74)	95.0 x 95.0 (3.74 x 3.74)	92.0 x 9.0 (3.62 x 3.62)	92.0 x 9.0 (3.62 x 3.62)
	Displacement		cm^3 (cu.in.)	2694 (164.4)	2694 (164.4)	2446 (149.3)	2446 (149.3)
	Compression Ratio			9.5 : 1	9.5 : 1	22.2 : 1	22.2 : 1
	Carburetor Type or Injection Pump Type (Diesel)			EFI	EFI	Distributor Type	Distributor Type
	Research Octane No. or Cetane No. (Diesel)			90 or higher	90 or higher	50 or higher	50 or higher
	Max. Output (EEC)		kW/ rpm	—	—	61 / 4200 (SAE-NET)	61 / 4200 (SAE-NET)
	Max. Torque (EEC)		N·m / rpm	—	—	162 / 2400 (SAE-NET)	162 / 2400 (SAE-NET)
Engine Electrical	Battery Capacity (5HR)		Voltage & Amp. hr.	12-48	12-48	12-52	12-52
	Alternator Output		Watts	840	840	660	660
	Starter Output		kW	1.2	1.2	2.0	2.0
Chassis	Clutch Type			Dry, Single Plate Diaphragm	Dry, Single Plate Diaphragm	Dry, Single Plate Diaphragm	Dry, Single Plate Diaphragm
	Transmission Type			W56	W56	G52	G52
	Transmission Gear Ratio	In First		3.954	3.954	3.928	3.928
		In Second		2.141	2.141	2.333	2.333
		In Third		1.384	1.384	1.451	1.451
		In Fourth		1.000	1.000	1.000	1.000
		In Fifth		0.850	0.850	0.851	0.851
		In Reverse		4.091	4.091	4.743	4.743
	Transfer Gear Ratio H4 / L4			1.000 / 2.566	1.000 / 2.566	—	—
	Differential Gear Ratio (Front / Rear)			4.300 / 4.300	4.300 / 4.300	— / 4.100	— / 4.100
	Differential Gear Size (Front / Rear)		in.	7.5 / 8.0	7.5 / 8.0	— / 8.0	— / 8.0
	Brake Type	Front		Ventilated Disc	Ventilated Disc	Ventilated Disc	Ventilated Disc
		Rear		Leading-Trailing Drum	Leading-Trailing Drum	Leading-Trailing Drum	Leading-Trailing Drum
	Parking Brake Type			Drum	Drum	Drum	Drum
	Brake Booster Type and Size		in.	Tandem 7.5" + 7.5"	Tandem 7.5" + 7.5"	Single 9"	Single 9"
	Proportioning Valve Type			Blend Valve	Blend Valve	Blend Valve	Blend Valve, LSP & BV*12
	Suspension Type	Front		Double Wishbone	Double Wishbone	Double Wishbone	Double Wishbone
		Rear		Leaf Spring	Leaf Spring	Leaf Spring	Leaf Spring
	Stabilizer Bar	Front		Standard	Standard	—	—
		Rear		—	—	—	—
	Steering Gear Type			Recirculating Ball	Recirculating Ball	Recirculating Ball	Recirculating Ball
	Steering Gear Ratio (Overall)			19.6	19.6	21.9, 21.2*8	21.9, 21.2*8
	Power Steering Type			Integral Type	Integral Type	Integral Type*7	Integral Type*7

*1: With Rear Step Bumpe
*3: With 255 / 70 R 16 Tire
*4: With 205 R 16 Tire
*5: With 185R 14 Tire
*7: Option
*8: With Power Steering
*9: Transfer in Low
*12: Models for Turkey

	General Countries					
	Regular Cab (2WD)	Double Cab (2WD)			Regular Cab (4WD)	
	DLX					
	LN145L-TRMDS3	LN145R-PRMDS	LN145L-PRMDS	LN191L-PRMDS	LN166R-TRMDS	LN166L-TRMDS
5	4785 (188.4), 4915 (193.5)*1	4785 (188.4), 4915 (193.5)*1	4785 (188.4), 4915 (193.5)*1	4785 (188.4), 4915 (193.5)*1	4785 (188.4), 4915 (193.5)*1	4785 (188.4), 4915 (193.5)*1
	1700 (66.9)	1700 (66.9)	1700 (66.9)	1700 (66.9)	1700 (66.9)	1700 (66.9)
	1615 (63.6), 1600 (63.0)*5	1645 (64.8), 1630 (64.2)*5	1645 (64.8), 1630 (64.2)*5	1825 (71.9), 1800 (70.9)*4	1795 (70.7), 1770 (69.7)*4	1795 (70.7), 1770 (69.7)*4
	2850 (112.2)	2850 (112.2)	2850 (112.2)	2860 (112.6)	2860 (112.6)	2860 (112.6)
	1395 (54.9)	1395 (54.9)	1395 (54.9)	1440 (56.7)	1440 (56.7)	1440 (56.7)
10	1410 (55.5)	1410 (55.5)	1410 (55.5)	1425 (56.1)	1425 (56.1)	1425 (56.1)
	1015 (40.0)	1820 (71.7)	1820 (71.7)	1820 (71.7)	1015 (40.0)	1015 (40.0)
	1405 (55.3)	1405 (55.3)	1405 (55.3)	1405 (55.3)	1405 (55.3)	1405 (55.3)
	1135 (44.7)	1165 (45.9)	1165 (45.9)	1165 (45.9)	1135 (44.7)	1135 (44.7)
	2160 (85.0)	1355 (53.3)	1355 (53.3)	1355 (53.3)	2160 (85.0)	2160 (85.0)
15	1465 (57.7)	1465 (57.7)	1465 (57.7)	1465 (57.7)	1465 (57.7)	1465 (57.7)
	405 (15.9)	405 (15.9)	405 (15.9)	405 (15.9)	405 (15.9)	405 (15.9)
	795 (31.3)	795 (31.3)	795 (31.3)	790 (31.1)	790 (31.1)	790 (31.1)
	1140 (44.9)	1140 (44.9)	1140 (44.9)	1135 (44.7)	1135 (44.7)	1135 (44.7)
	190 (7.5)	190 (7.5)	190 (7.5)	225 (8.9)	225 (8.9)	225 (8.9)
20	27	27	27	37	37	37
	27	27	27	35	35	35
	800 (1764)	815 (1797)	815 (1797)	890 (1962)	955 (2105)	955 (2105)
	565 (1246)	625 (1378)	625 (1378)	665 (1466)	615 (1356)	615 (1356)
	1365 (3009)	1440 (3175)	1440 (3175)	1555 (3428)	1570 (3461)	1570 (3461)
25	—	—	—	—	—	—
	—	—	—	—	—	—
	2580 (5688)	2580 (5688)	2580 (5688)	2580 (5688)	2590 (5710)	2590 (5710)
	69 (15.2)	66 (14.5)	66 (14.5)	66 (14.5)	77 (16.9)	77 (16.9)
	—	—	—	—	—	—
30	145 (90)	145 (90)	145 (90)	140 (90)	140 (90)	140 (90)
	—	—	—	—	—	—
	35 (22)	35 (22)	35 (22)	34 (21)	34 (21), 15 (9)*9	34 (21), 15 (9)*9
	60 (37)	60 (37)	60 (37)	57 (35)	57 (35), 25 (16)*9	57 (35), 25 (16)*9
	97 (60)	97 (60)	97 (60)	92 (57)	92 (57), 40 (25)*9	92 (57), 40 (25)*9
35	131 (81)	131 (81)	131 (81)	126 (78)	126 (78), 58 (35)*9	126 (78), 58 (35)*9
	5.8 (19.0)	5.8 (19.0)	5.8 (19.0)	6.1 (20.0)	6.1 (20.0)	6.1 (20.0)
	6.2 (20.3)	6.2 (20.3)	6.2 (20.3)	6.6 (21.7)	6.6 (21.7)	6.6 (21.7)
	2L	2L	2L	3L	3L	3L
	8-Valve, OHC	8-Valve, OHC	8-Valve, OHC	8-Valve, OHC	8-Valve, OHC	8-Valve, OHC
40	92.0 x 92.0 (3.62 x 3.62)	92.0 x 92.0 (3.62 x 3.62)	92.0 x 92.0 (3.62 x 3.62)	96.0 x 96.0 (3.78 x 3.78)	96.0 x 96.0 (3.78 x 3.78)	96.0 x 96.0 (3.78 x 3.78)
	2446 (149.3)	2446 (149.3)	2446 (149.3)	2778 (169.6)	2778 (169.6)	2778 (169.6)
	22.2 : 1	22.2 : 1	22.2 : 1	22.2 : 1	22.2 : 1	22.2 : 1
	Distributor Type	Distributor Type	Distributor Type	Distributor Type	Distributor Type	Distributor Type
	50 or higher	50 or higher	50 or higher	50 or higher	50 or higher	50 or higher
45	61 / 4200 (SAE-NET)	61 / 4200 (SAE-NET)	61 / 4200 (SAE-NET)	65 / 4000	65 / 4000	65 / 4000
	162 / 2400 (SAE-NET)	162 / 2400 (SAE-NET)	162 / 2400 (SAE-NET)	185 / 2400	185 / 2400	185 / 2400
	12-52	12-52	12-52	12-55	12-55	12-55
	660	660	660	660	660	660
	2.0	2.0	2.0	2.0	2.0	2.0
50	Dry, Single Plate Diaphragm	Dry, Single Plate Diaphragm	Dry, Single Plate Diaphragm	Dry, Single Plate Diaphragm	Dry, Single Plate Diaphragm	Dry, Single Plate Diaphragm
	G52	G52	G52	G52	G52	G52
	3.928	3.928	3.928	3.928	3.928	3.928
	2.333	2.333	2.333	2.333	2.333	2.333
	1.451	1.451	1.451	1.451	1.451	1.451
55	1.000	1.000	1.000	1.000	1.000	1.000
	0.851	0.851	0.851	0.851	0.851	0.851
	4.743	4.743	4.743	4.743	4.743	4.743
	—	—	—	—	1.000 / 2.276	1.000 / 2.276
	— / 4.100	— / 4.100	— / 4.100	— / 4.556	4.556 / 4.556	4.556 / 4.556
60	— / 8.0	— / 8.0	— / 8.0	— / 8.0	7.5 / 8.0	7.5 / 8.0
	Ventilated Disc	Ventilated Disc	Ventilated Disc	Ventilated Disc	Ventilated Disc	Ventilated Disc
	Leading-Trailing Drum	Leading-Trailing Drum	Leading-Trailing Drum	Leading-Trailing Drum	Leading-Trailing Drum	Leading-Trailing Drum
	Drum	Drum	Drum	Drum	Drum	Drum
	Single 9”	Single 9”	Single 9”	Single 9”	Single 9”	Single 9”
65	Blend Valve, LSP & BV*12	Blend Valve	Blend Valve, LSP & BV*12	Blend Valve	Blend Valve	Blend Valve
	Double Wishbone	Double Wishbone	Double Wishbone	Double Wishbone	Double Wishbone	Double Wishbone
	Leaf Spring	Leaf Spring	Leaf Spring	Leaf Spring	Leaf Spring	Leaf Spring
	—	—	—	Standard	Standard	Standard
	—	—	—	—	—	—
70	Recirculating Ball	Recirculating Ball	Recirculating Ball	Recirculating Ball	Recirculating Ball	Recirculating Ball
	21.9, 21.2*8	21.9, 21.2*8	21.9, 21.2*8	21.2	19.6	19.6
	Integral Type*7	Integral Type*7	Integral Type*7	Integral Type	Integral Type	Integral Type

Item \ Area				General Countries			
Body Type				Double Cab (4WD)			Extra Cab (4WD)
Vehicle Grade				DLX		SR	DLX
Model Code				LN166R-PRMDS	LN166L-PRMDS	LN166L-PRMSS	LN171L-CRMDS
Major Dimensions & Vehicle Weights	Overall	Length	mm (in.)	4785 (188.4), 4915 (193.5)*1	4785 (188.4), 4915 (193.5)*1	4785 (188.4), 4915 (193.5)*1	5030 (198.0), 5160 (203.1)*1
		Width	mm (in.)	1700 (66.9), 1790 (70.5)*3	1700 (66.9), 1790 (70.5)*3	1700 (66.9), 1790 (70.5)*3	1700 (66.9)
		Height	mm (in.)	1825 (71.9), 1800 (70.9)*4, 1790 (70.5)*3	1825 (71.9), 1800 (70.9)*4, 1790 (70.5)*3	1825 (71.9), 1800 (70.9)*4, 1790 (70.5)*3	1755 (69.1)
	Wheel Base		mm (in.)	2860 (112.6)	2860 (112.6)	2860 (112.6)	3095 (121.9)
	Tread	Front	mm (in.)	1440 (56.7), 1485 (58.5)*3	1440 (56.7), 1485 (58.5)*3	1440 (56.7), 1485 (58.5)*3	1440 (56.7)
		Rear	mm (in.)	1425 (56.1), 1470 (57.9)*3	1425 (56.1), 1470 (57.9)*3	1425 (56.1), 1470 (57.9)*3	1425 (56.1)
	Room	Length	mm (in.)	1820 (71.7)	1820 (71.7)	1820 (71.7)	1515 (59.6)
		Width	mm (in.)	1405 (55.3)	1405 (55.3)	1405 (55.3)	1405 (55.3)
		Height	mm (in.)	1165 (45.9)	1165 (45.9)	1165 (45.9)	1140 (44.9)
	Cargo Space	Length	mm (in.)	1355 (53.3)	1355 (53.3)	1355 (53.3)	1855 (73.0)
		Width	mm (in.)	1465 (57.7)	1465 (57.7)	1465 (57.7)	1450 (57.1)
		Height	mm (in.)	405 (15.9)	405 (15.9)	405 (15.9)	405 (15.9)
	Overhang	Front	mm (in.)	790 (31.1)	790 (31.1)	790 (31.1)	790 (31.1)
		Rear	mm (in.)	1135 (44.7)	1135 (44.7)	1135 (44.7)	1135 (44.7)
	Min. Running Ground Clearance		mm (in.)	225 (8.9)	225 (8.9)	225 (8.9)	225 (8.9)
	Angle of Approach		degrees	37	37	37	37
	Angle of Departure		degrees	35	35	35	35
	Curb Weight	Front	kg (lb)	970 (2138)	970 (2138)	975 (2150)	970 (2138)
		Rear	kg (lb)	675 (1488)	675 (1488)	680 (1499)	650 (1433)
		Total	kg (lb)	1645 (3627)	1645 (3627)	1655 (3649)	1620 (3571)
	Gross Vehicle Weight	Front	kg (lb)	—	—	—	—
		Rear	kg (lb)	—	—	—	—
		Total	kg (lb)	2590 (5710)	2590 (5710)	2590 (5710)	2590 (5710)
	Fuel Tank Capacity		ℓ (Imp.gal)	66 (14.5)	66 (14.5)	66 (14.5)	77 (16.9)
	Luggage Compartment Capacity		m^3 (cu.ft.)	—	—	—	—
Performance	Max. Speed		km / h (mph)	140 (87)	140 (87)	140 (87)	140 (87)
	Max. Cruising Speed		km / h (mph)	—	—	—	—
	Max. Permissible Speed	1st Gear	km / h (mph)	34 (21), 15 (9)*9	34 (21), 15 (9)*9	34 (21), 15 (9)*9	34 (21), 15 (9)*9
		2nd Gear	km / h (mph)	57 (35), 25 (16)*9	57 (35), 25 (16)*9	57 (35), 25 (16)*9	57 (35), 25 (16)*9
		3rd Gear	km / h (mph)	92 (57), 40 (25)*9	92 (57), 40 (25)*9	92 (57), 40 (25)*9	92 (57), 40 (25)*9
		4th Gear	km / h (mph)	126 (78), 58 (35)*9	126 (78), 58 (35)*9	126 (78), 58 (35)*9	126 (78), 58 (35)*9
	Min. Turning Radius	Tire	m (ft.)	6.1 (20.0)	6.1 (20.0)	6.1 (20.0)	6.1 (20.0)
		Body	m (ft.)	6.6 (21.7)	6.6 (21.7)	6.6 (21.7)	6.6 (21.7)
Engine	Engine Type			3L	3L	3L	3L
	Valve Mechanism			8-Valve, OHC	8-Valve, OHC	8-Valve, OHC	8-Valve, OHC
	Bore x Stroke		mm (in.)	96.0 x 96.0 (3.78 x 3.78)	96.0 x 96.0 (3.78 x 3.78)	96.0 x 96.0 (3.78 x 3.78)	96.0 x 96.0 (3.78 x 3.78)
	Displacement		cm^3 (cu.in.)	2778 (169.6)	2778 (169.6)	2778 (169.6)	2778 (169.6)
	Compression Ratio			22.2 : 1	22.2 : 1	22.2 : 1	22.2 : 1
	Fuel System			Distributor Type	Distributor Type	Distributor Type	Distributor Type
	Research Octane No. or Cetane No. (Diesel)			50 or higher	50 or higher	50 or higher	50 or higher
	Max. Output (EEC)		kW / rpm	65 / 4000	65 / 4000	65 / 4000	65 / 4000
	Max. Torque (EEC)		N·m / rpm	185 / 2400	185 / 2400	185 / 2400	185 / 2400
Engine Electrical	Battery Capacity (5HR)		Voltage & Amp. hr.	12-55	12-55	12-55	12-55
	Alternator Output		Watts	660	660	660	660
	Starter Output		kW	2.0	2.0	2.0	2.0
Chassis	Clutch Type			Dry, Single Plate Diaphragm	Dry, Single Plate Diaphragm	Dry, Single Plate Diaphragm	Dry, Single Plate Diaphragm
	Transmission Type			G52	G52	G52	G52
	Transmission Gear Ratio	In First		3.928	3.928	3.928	3.928
		In Second		2.333	2.333	2.333	2.333
		In Third		1.451	1.451	1.451	1.451
		In Fourth		1.000	1.000	1.000	1.000
		In Fifth		0.851	0.851	0.851	0.851
		In Reverse		4.743	4.743	4.743	4.743
	Transfer Gear Ratio H4 / L4			1.000 / 2.276	1.000 / 2.276	1.000 / 2.276	1.000 / 2.276
	Differential Gear Ratio (Front / Rear)			4.556 / 4.556	4.556 / 4.556	4.556 / 4.556	4.556 / 4.556
	Differential Gear Size (Front / Rear)		in.	7.5 / 8.0	7.5 / 8.0	7.5 / 8.0	7.5 / 8.0
	Brake Type	Front		Ventilated Disc	Ventilated Disc	Ventilated Disc	Ventilated Disc
		Rear		Leading-Trailing Drum	Leading-Trailing Drum	Leading-Trailing Drum	Leading-Trailing Drum
	Parking Brake Type			Drum	Drum	Drum	Drum
	Brake Booster Type and Size		in.	Single 9"	Single 9"	Single 9"	Single 9"
	Proportioning Valve Type			Blend Valve	Blend Valve	Blend Valve	Blend Valve
	Suspension Type	Front		Double Wishbone	Double Wishbone	Double Wishbone	Double Wishbone
		Rear		Leaf Spring	Leaf Spring	Leaf Spring	Leaf Spring
	Stabilizer Bar	Front		Standard	Standard	Standard	Standard
		Rear		—	—	—	—
	Steering Gear Type			Recirculating Ball	Recirculating Ball	Recirculating Ball	Recirculating Ball
	Steering Gear Ratio (Overall)			19.6	19.6	19.6	19.6
	Power Steering Type			Integral Type	Integral Type	Integral Type	Integral Type

*1: With Rear Step Bumper
*3: With 255 / 70 R 16 Tire
*4: With 205 R 16 Tire
*9: Transfer in Low

COASTER

OUTLINE OF NEW FEATURES

The following changes are made for the new COASTER.

1. Model Lineup

- The five models for China (BB50L-ZGMSWC, BB50L-ZCMQWC, RZB40L-ZRMSKC, RZB40L-ZEMSKC, and RZB50L-ZGMSKC) have been discontinued.
- Two models (BB50R-ZCMSZ and BZB50R-ZCMSC) have been provided for General Countries.

2. All Engines

The TOYOTA genuine super long life coolant (SLLC) has been adopted. As result, the maintenance interval has been extended.

3. 3RZ-FE Engine

To comply with the regulations, a TWC (Three-Way Catalytic Converter) and an oxygen sensor have been added and making it unleaded to the 3RZ-FE engine models for the G.C.C. (Gulf Cooperation Council) countries.

4. Seat Belt

Seat belts have been provided as standard equipment for all seats (except auxiliary seats) on all models for Saudi Arabia.

MODEL CODE

HZB50 R–Z E M R S Q 5

1 2 3 4 5 6 7 8 9

1 BASIC MODEL CODE

CODE	ENGINE	WHEEL BASE
RZB40	3RZ-FE	Short
RZB50		Long
BB42	14B	Short
BB50	15B-FT	Long
	15B-FTE	
BB58		
BB59		Super Long
BZB40	1BZ-FPE	Short
BZB50		Long
HZB50	1HZ	

2 STEERING WHEEL POSITION

L : Left-Hand Drive
R : Right-Hand Drive

3 ROOF TYPE

B : Standard Roof
Z : High Roof

4 SEATING CAPACITY

C : 17 or 20
E : 19, 20, 22 or 23
G : 30
R : 26

5 GEAR SHIFT TYPE

F : 6-Speed Manual, Floor
M: 5-Speed Manual, Floor

6 GRADE

N : DX
R : Standard (Without Air Conditioner)
S : Standard (With Air Conditioner)
Q : EX

7 ENGINE SPECIFICATION

C : LPG
K : EFI
S : Diesel
W: Diesel, Tarbochager
Z : EFI Diesel, Tarbochager

8 DESTINATION

Q : Australia
V : G.C.C. Counries
C : China
Blank : General Countries

9 CHASSIS MODEL/COMPLETE MODEL

5 : Super Long, Seat Less Model
1 : Europe chassis (CKD)
Blank : Complete Model

MODEL LINE-UP

Australia, G.C.C. Countries, Europe

DESTINATION	ENGINE	WHEEL BASE	ROOF TYPE	SEATING CAPACITY	GRADE	MANUAL TRANSMISSION			
						5-Speed			6-Speed
						M152	M155	M156	H260
Australia	1HZ	Long	High Roof	22	DX	—	—	—	BB50R-ZEFRZQ
					Standard (Without Air Conditioner)	—	—	—	BB50R-ZEFSZQ
					Standard (With Air Conditioner)	—	—	—	BB50R-ZEFNZQ
G.C.C. Countries	3RZ-FE	Short	Standard Roof	26		—	—	RZB40L-BRMSKV	—
			High Roof	17	EX	—	—	RZB40L-ZCMQKV	—
				26	Standard (With Air Conditioner)	—	—	RZB40L-ZRMSKV	—
		Long	Standard Roof	30		—	—	RZB50L-BGMSKV	—
			High Roof			—	—	RZB50L-ZGMSKV	—
	14B	Short	Standard Roof	26		BB42L-BRMSSV	—	—	—
	1HZ	Long		30		—	HZB50L-BGMSSV	—	—
			High Roof			—	HZB50L-ZGMSSV	—	—
Europe	15B-FTE	Long	High Roof	26	Standard (Without Air Conditioner)	—	—	—	BB50L-ZRFRZW1
						—	—	—	BB50R-ZRFRZW1
					Standard (With Air Conditioner)	—	—	—	BB50L-ZRFSZW1

General Countries

: New

ENGINE	WHEEL BASE	ROOF TYPE	SEATING CAPACITY	GRADE	MANUAL TRANSMISSION			
					5-Speed			6-Speed
					M152	M155	M156	H260
3RZ-FE	Short	Standard Roof	26	Standard (Without Air Conditioner)	—	—	RZB40L-BRMRK	—
				Standard (With Air Conditioner)	—	—	RZB40L-BRMSK	—
		High Roof			—	—	RZB40L-ZRMSK	—
	Long		30		—	—	RZB50L-ZGMSK	—
14B	Short	Standard Roof	26	Standard (With Air Conditioner)	BB42L-BRMSS	—	—	—
		High Roof		Standard (Without Air Conditioner)	BB42L-BRMRS	—	—	—
					BB42L-ZRMRS	—	—	—
					BB42L-BRMRS	—	—	—
				Standard (With Air Conditioner)	BB42L-ZRMSS	—	—	—
					BB42R-ZRMSS	—	—	—
15B-FT	Long		30		—	BB50L-ZGMSW	—	—
				Standard (Without Air Conditioner)	—	BB50L-ZGMRW	—	—
15B-FTE			20	EX	—	BB50R-ZEMQZ	—	—
			19	Standard (With Air Conditioner)	—	—	—	BB50L-ZEFSZ
			23		—	—	—	BB58L-ZEFSZ
			19	EX	—	BB59R-ZEMQZ5	—	—
1HZ			30	Standard (Without Air Conditioner)	—	BB50R-ZCMSZ	—	—
	Long	Standard Roof			—	HZB50L-BGMRS	—	—
				Standard (With Air Conditioner)	—	HZB50L-BGMSS	—	—
		High Roof	20	EX	—	HZB50L-ZCMQS	—	—
			30	Standard (Without Air Conditioner)	—	HZB50L-ZGMRS	—	—
				Standard (With Air Conditioner)	—	HZB50L-ZGMSS	—	—
					—	HZB50R-ZGMSS	—	—
1BZ-FPE	Short		17	Standard (With Air Conditioner)	—	BZB40R-ZCMSC	—	—
	Long			EX	—	BZB50R-ZEMQC	—	—
				Standard (Without Air Conditioner)	—	BZB50R-ZCMSC	—	—

8

NEW FEATURES

■ ALL ENGINES

The TOYOTA genuine super long life coolant (SLLC) has been adopted. As result, the maintenance interval has been extended.

▶ Specifications ◀

Model				New	Previous
Engine Coolant	Capacity liters (US qts, Imp.qts)	3RZ-FE	M/T	9.5 (10.0, 8.4)	←
			A/T	9.3 (9.8, 8.2)	←
		14B	Without Heater	11.0 (11.6, 9.7)	←
			With Front Heater	13.0 (13.7, 11.4)	←
			With Front and Rear Heater	15.6 (16.5, 13.7)	←
		15B-FT	Without Heater	12.4 (13.1, 10.9)	←
			With Heater	13.5 (14.3, 11.9)	←
		15B-FTE	With Front and Rear Heater	17.1 (18.8, 15.7)	←
			With Front and Rear Heater (With Water Pump)	19.1 (20.2, 16.8)	←
		1HZ	Without Heater	14.0 (14.8, 12.3)	←
			With Front Heater	15.9 (15.9, 14.0)	←
			With Front and Rear Heater	16.9 (17.9, 14.9)	←
		1BZ-FPE	—	14.7 (15.5, 12.9)	←
	Type			TOYOTA Genuine SLLC	TOYOTA Genuine LLC
	Maintenance Intervals		First time	160,000 km (100,000 mile)	Every 40,000 km (25,000 mile) or 24 months Whichever comes first
			Subsequent	Every 80,000 km (50,000 mile)*2	
	Color			Pink	Red
Thermostat	Operating Temperature °C (°F)			80 – 84 (176 – 183)	←

- SLLC is pre-mixed (50% coolant and 50% distilled water), so no dilution is needed when adding or replacing SLLC in the vehicle.
- If LLC is mixed with SLLC, the interval for LLC (every 40,000 km/25,000 miles or 24 months) should be used.
- You can also apply the new maintemance interval (every 80,000 km/50,000 mile) to vehicles initially filled with LLC (red-colored) if you use SLLC (pink-color) for the coolant change.

■3RZ-FE ENGINE

1. General

- The engine has been changed to the unleaded gasoline type.
- A thin-wall, ceramic type TWC has been adopted.
- One oxygen sensor has been newly provided in front of the TWC in order to improve the exhaust reduction performance of the TWC through feedback control to the engine ECU.

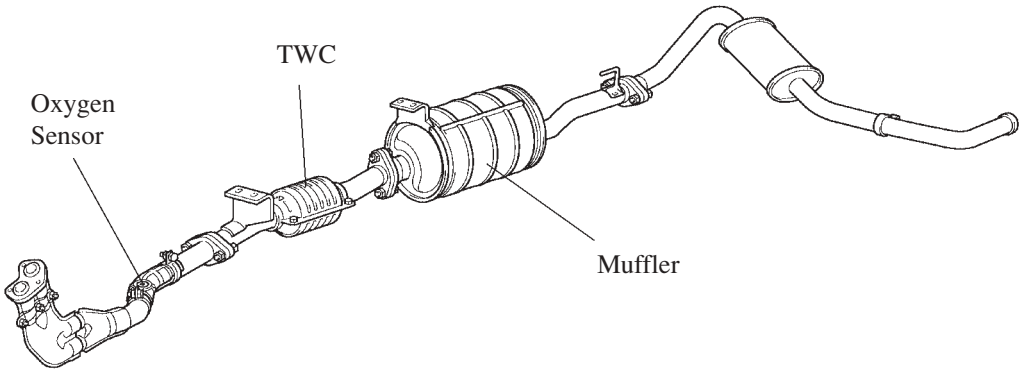

258CO02

2. TWC (Three-way Catalytic Converter)

A thin-wall, ceramic type TWC has been adopted. This TWC enables to improve exhaust emissions by optimizing and the wall thickness.

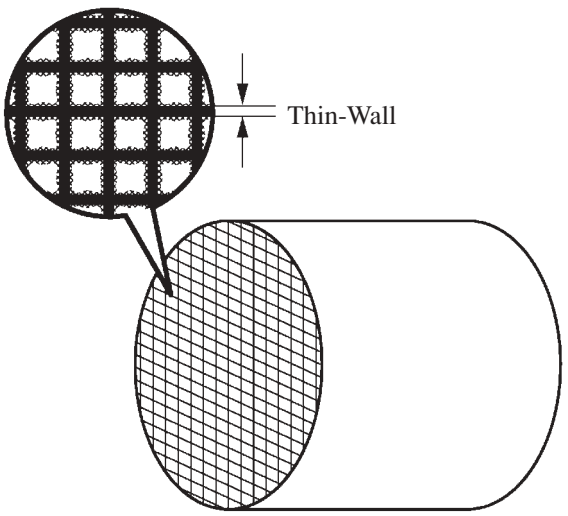

198EG06

MAJOR TECHNICAL SPECIFICATIONS

Item \ Area				Australia			G.C.C Countries
Body Type				High Roof			Standard Roof
Vehicle Grade				Standard	Standard (With Air Conditioner)	EX	Standard (With Air Conditioner)
Model Code				BB50R-ZEFRZQ	BB50R-ZEFSZQ	BB50R-ZEFNZQ	BB42L-BRMSSV
Major Dimensions & Vehicle Weights	Overall	Length	mm (in.)	6990 (275.2)	6990 (275.2)	6255 (246.6)	6255 (246.6)
		Width	mm (in.)	2025 (79.7), 2195 (86.4)*1	2025 (79.7), 2195 (86.4)*1	2025 (79.7), 2195 (86.4)*1	2025 (79.7), 2195(86.4)*1
		Height	mm (in.)	2445 (96.2)	2600 (102.4)	2585 (101.8)	2430 (95.7)
	Wheel Base		mm (in.)	3935 (154.9)	3935 (154.9)	3200 (126.0)	3200 (126.0)
	Tread	Front	mm (in.)	1690 (66.5)	1690 (66.5)	1690 (66.5)	1690 (66.5)
		Rear	mm (in.)	1490 (58.7)	1490 (58.7)	1490 (58.7)	1490 (58.7)
	Room	Length	mm (in.)	6230 (245.3)	6230 (245.3)	5490 (216.1)	5490 (216.1)
		Width	mm (in.)	1890 (74.4)	1890 (74.4)	1900 (74.8)	1900 (74.8)
		Height	mm (in.)	1665 (65.6)	1830 (72.0)	1830 (72.0)	1665 (65.6)
	Cargo Space	Length	mm (in.)	—	—	—	—
		Width	mm (in.)	—	—	—	—
		Height	mm (in.)	—	—	—	—
	Overhang	Front	mm (in.)	1150 (45.3)	1150 (45.3)	1150 (45.3)	1150 (45.3)
		Rear	mm (in.)	1905 (75.0)	1905 (75.0)	1905 (75.0)	1905 (75.0)
	Min. Running Ground Clearance		mm (in.)	185 (7.3)	185 (7.3)	175 (6.9)	175 (6.9)
	Angle of Approach		degrees	18	18	17	17, 18*2
	Angle of Departure		degrees	14	14	14	14
	Curb Weight	Front	kg (lb)	1645 - 1725 (3627 - 3803)	1645 - 1700 (3627 - 3748)	1335 - 1435 (2943 - 3164)	1490 - 1570 (3285 - 3461)
		Rear	kg (lb)	1580 - 1750 (3483 - 3858)	1595 - 1705 (3516 - 3759)	1425 - 1575 (3142 - 3472)	1490 - 1660 (3285 - 3660)
		Total	kg (lb)	3230 - 3475 (7121 - 7661)	3230 - 3475 (7121 - 7661)	2760 - 3010 (6085 - 6636)	2980 - 3210 (6510 - 7077)
	Gross Vehicle Weight	Front	kg (lb)	2400 (5291)	2400 (5291)	1820 (4012)	2020 (4453)
		Rear	kg (lb)	3270 (7209)	3270 (7209)	2690 (5930)	3160 (6967)
		Total	kg (lb)	5670 (12500)	5670 (12500)	4510 (9943)	5180 (11420)
	Fuel Tank Capacity		ℓ (Imp.gal.)	95 (20.9)	95 (20.9)	95 (20.9)	95 (20.9)
	Luggage Compartment Capacity		m^3 (cu.ft.)	0.411 (14.5)	0.411 (14.5)	0.411 (14.5)	0.411 (14.5)
Performance	Max. Speed		km / h (mph)	—	—	—	—
	Max. Cruising Speed		km / h (mph)	—	—	—	—
	Max. Permissible Speed	1st Gear	km / h (mph)	15 (9)	15 (9)	15 (9)	15 (9)
		2nd Gear	km / h (mph)	25 (16)	25 (16)	25 (16)	30 (19)
		3rd Gear	km / h (mph)	50 (31)	50 (31)	50 (31)	50 (31)
		4th Gear	km / h (mph)	85 (53)	85 (53)	85 (53)	85 (53)
		5th Gear	km / h (mph)	105 (65)	105 (65)	105 (65)	—
	Min. Turning Radius	Tire	m (ft.)	7.2 (23.6)	7.2 (23.6)	7.2 (23.6)	6.1 (20.0)
		Body	m (ft.)	7.9 (25.9)	7.9 (25.9)	7.9 (25.9)	6.8 (22.3)
Engine	Engine Type			15B-FTE	15B-FTE	15B-FTE	14B
	Valve Mechanism			16-Valve, OHV	16-Valve, OHV	16-Valve, OHV	8-Valve, OHV
	Bore x Stroke		mm (in.)	108.0 x 112.0 (4.25 x 4.41)	108.0 x 112.0 (4.25 x 4.41)	108.0 x 112.0 (4.25 x 4.41)	102.0 x 112.0 (4.02 x 4.41)
	Displacement		cm^3 (cu.in.)	4104 (250.4)	4104 (250.4)	4104 (250.4)	3661 (223.4)
	Compression Ratio			18.4 : 1	18.4 : 1	18.4 : 1	18.0 : 1
	Fuel System			Distributor Type	Distributor Type	Distributor Type	Distributor Type
	Research Octane No. or Cetane No. (Diesel)			50 or higher	50 or higher	50 or higher	50 or higher
	Max. Output (SAE-NET)		kW / rpm	100 / 2600 (EEC)	100 / 2600 (EEC)	100 / 2600 (EEC)	72 / 3400
	Max. Torque (SAE-NET)		N·m / rpm	382 / 1200 - 2200 (EEC)	382 / 1200 - 2200 (EEC)	382 / 1200 - 2200 (EEC)	240 / 1800
Engine Electrical	Battery Capacity (5HR)		Voltage & Amp. hr.	12-48	12-48	12-48	12-40, 12-48*3
	Alternator Output		Watts	1440	1440	1440	1440
	Starter Output		kW	4.5	4.5	4.5	4.5
Chassis	Clutch Type			Dry, Single Plate Diaphragm	Dry, Single Plate Diaphragm	Dry, Single Plate Diaphragm	Dry, Single Plate Diaphragm
	Transmission Type			H260	H260	H260	M152
	Transmission Gear Ratio	In First		4.772	4.772	4.772	4.802
		In Second		2.795	2.795	2.795	2.792
		In Third		1.570	1.570	1.570	1.694
		In Fourth		1.000	1.000	1.000	1.000
		In Fifth		0.775	0.775	0.775	0.788
		In Sixth		0.619	0.619	0.619	—
		In O/D		—	—	—	—
		In Reverse		4.545	4.545	4.545	5.339
	Transfer Gear Ratio H4/L4			—	—	—	—
	Differential Gear Ratio (Front/Rear)			5.625	5.625	5.625	5.625
	Differential Gear Size (Front/Rear)		in.	10.5	10.5	10.5	10.5
	Brake Type	Front		Ventilated Disc	Ventilated Disc	Ventilated Disc	Two-Leading Drum, Ventilated Disc*3
		Rear		Dual-Two-Leading	Dual-Two-Leading	Dual-Two-Leading	Dual-Two-Leading
	Parking Brake Type			Drum	Drum	Drum	Drum
	Brake Booster Type and Size		in.	Tandem, 9" + 10"	Tandem, 9" + 10"	Tandem 9" + 10"	Single, 11"
	Proportioning Valve Type			—	—	—	—
	Suspension Type	Front		Double Wishbone	Double Wishbone	Double Wishbone	Double Wishbone
		Rear		Leaf Spring	Leaf Spring	Leaf Spring	Leaf Spring
	Stabilizer Bar	Front		—	—	—	—
		Rear		—	—	—	OPT
	Steering Gear Type			Recirculating Ball	Recirculating Ball	Recirculating Ball	Recirculating Ball
	Steering Gear Ratio (Overall)			17.6	17.6	17.6	17.6
	Power Steering Type			Integral Type	Integral Type	Integral Type	Integral Type

*1 : With snokel cleaner air duct *2 : 7.00 R16 Tire (Option) *3 : Option

G.C.C Countries					
Standard Roof	High Roof		Standard Roof		High Roof
Standard (With Air Conditioner)		EX	Standard (With Air Conditioner)		
HZB50L-BGMSSV	HZB50L-ZGMSSV	RZB40L-ZCMQKV	RZB40L-BRMSKV	RZB50L-BGMSKV	RZB40L-ZRMSKV
6990 (275.2)	6990 (275.2)	6255 (246.6)	6255 (246.6)	6990 (275.2)	6255 (246.6)
2025 (79.7), 2195 (86.4)*1	2025 (79.7), 2195 (86.4)*1	2025 (79.7), 2195 (86.4)*1	2025 (79.7), 2195 (86.4)*1	2025 (79.7), 2195 (86.4)*1	2025 (79.7), 2195 (86.4)*1
2445 (96.2)	2600 (102.4)	2585 (101.8)	2430 (95.7)	2445 (96.2)	2585 (101.8)
3935 (154.9)	3935 (154.9)	3200 (126 0)	3200 (126.0)	3935 (154.9)	3200 (126.0)
1690 (66.5)	1690 (66.5)	1690 (66.5)	1690 (66.5)	1690 (66.5)	1690 (66.5)
1490 (58.7)	1490 (58.7)	1490 (58.7)	1490 (58.7)	1490 (58.7)	1490 (58.7)
6230 (245.3)	6230 (245.3)	5490 (216.1)	5490 (216.1)	6230 (245.3)	5490 (216.1)
1890 (74.4)	1890 (74.4)	1900 (74.8)	1900 (74.8)	1890 (74.4)	1900 (74.8)
1665 (65.6)	1830 (72.0)	1830 (72.0)	1830 (72.0)	1665 (65.6)	1830 (72.0)
—	—	—	—	—	—
—	—	—	—	—	—
—	—	—	—	—	—
1150 (45.3)	1150 (45.3)	1150 (45.3)	1150 (45.3)	1150 (45.3)	1150 (45.3)
1905 (75.0)	1905 (75.0)	1905 (75.0)	1905 (75.0)	1905 (75.0)	1905 (75.0)
185 (7.3)	185 (7.3)	175 (6.9)	175 (6.9)	18.5 (7.3)	175 (6.9)
18	18	17	17	17	17
14	14	14	14	14	14
1645 - 1725 (3627 - 3803)	1645 - 1700 (3627 - 3748)	1335 - 1435 (2943 - 3164)	1335 - 1455 (2943 - 3208)	1435 - 1545 (3164 - 3406)	1335 - 1435 (2943 - 3164)
1580 - 1750 (3483 - 3858)	1595 - 1705 (3516 - 3759)	1425 - 1575 (3142 - 3472)	1425 - 1635 (3142 - 3605)	1485 - 1685 (3274 - 3715)	1435 - 1605 (3164 - 3538)
3230 - 3455 (7121 - 7661)	3230 - 3475 (7121 - 7661)	2760 - 3010 (6085 - 6636)	2760 - 3090 (6085 - 6812)	2920 - 3230 (6407 - 7121)	2770 - 3040 (6107 - 6702)
2400 (5291)	2400 (5291)	1820 (4012)	2020 (4453)	2170 (4784)	2020 (4453)
3270 (7209)	3270 (7209)	2690 (5930)	2990 (6592)	3140 (6923)	2990 (6592)
5670 (12500)	5670 (12500)	4510 (9943)	5010 (11045)	5310 (11707)	5010 (11045)
95 (20.9)	95 (20.9)	95 (20.9)	95 (20.9)	95 (20.9)	95 (20.9)
0.411 (14.5)	0.411 (14.5)	0.411 (14.5)	0.411 (14.5)	0.411 (14.5)	0.411 (14.5)
—	—	—	—	—	—
—	—	—	—	—	—
20 (12)	20 (12)	20 (12)	20 (12)	20 (12)	20 (12)
35 (22)	35 (22)	40 (24)	40 (24)	40 (24)	40 (24)
60 (37)	60 (37)	70 (43)	70 (43)	70 (43)	70 (43)
100 (62)	100 (62)	115 (71)	115 (71)	115 (71)	115 (71)
—	—	—	—	—	—
7.2 (23.6)	7.2 (23.6)	6.1 (20.0)	6.1 (20.0)	7.2 (23.6)	6.1 (20.0)
7.9 (25.9)	7.9 (25.9)	6.8 (22.3)	6.8 (22.3)	7.9 (25.9)	6.8 (22.3)
1HZ	1HZ	3RZ-FE	3RZ-FE	3RZ-FE	3RZ-FE
12-Valve, OHC	12-Valve, OHC	16-Valve, DOHC	16-Valve, DOHC	16-Valve, DOHC	16-Valve, DOHC
94.0 x 100.0 (3.70 x 3.94)	94.0 x 100.0 (3.70 x 3.94)	95.0 x 95.0 (3.74 x 3.74)	95.0 x 95.0 (3.74 x 3.74)	95.0 x 95.0 (3.74 x 3.74)	95.0 x 95.0 (3.74 x 3.74)
4164 (254.1)	4164 (254.1)	2694 (164.4)	2694 (164.4)	2694 (164.4)	2694 (164.4)
22.4 : 1	22.4 : 1	9.5 : 1	9.5 : 1	9.5 : 1	9.5 : 1
Distributer Type	Distributer Type	EFI	EFI	EFI	EFI
50 or higher	50 or higher	90 or higher	90 or higher	90 or higher	90 or higher
96 / 3800	96 / 3800	112 / 4800	112 / 4800	112 / 4800	112 / 4800
285 / 2200	285 / 2200	240 / 4000	240 / 4000	240 / 4000	240 / 4000
12-40, 12-48*3	12-40, 12-48*3	12-40, 12-48*3	12-40, 12-48*3	12-40, 12-48*3	12-40, 12-48*3
1440	1440	960	960	960	960
4.5	4.5	1.4	1.4	1.4	1.4
Dry, Single Plate Diaphragm	Dry, Single Plate Diaphragm	Dry, Single Plate Diaphragm	Dry, Single Plate Diaphragm	Dry, Single Plate Diaphragm	Dry, Single Plate Diaphragm
M155	M155	M156	M156	M156	M156
4.535	4.535	5.657	5.657	5.657	5.657
2.858	2.858	2.818	2.818	2.818	2.818
1.600	1.600	1.687	1.687	1.687	1.687
1.000	1.000	1.000	1.000	1.000	1.000
0.744	0.744	0.835	0.835	0.835	0.835
—	—	—	—	—	—
—	—	—	—	—	—
5.043	5.043	5.657	5.657	5.657	5.657
—	—	—	—	—	—
5.625	5.625	5.857	5.857	6.142	6.142
10.5	10.5	10.5	10.5	10.5	10.5
Two-Leading Drum, Ventilated Disc*3	Two-Leading Drum, Ventilated Disc*3	Two-Leading Drum, Ventilated Disc*3	Two-Leading Drum, Ventilated Disc*3	Ventilated Disc	Ventilated Disc
Dual-Two-Leading	Dual-Two-Leading	Dual-Two-Leading	Dual-Two-Leading	Dual-Two-Leading	Dual-Two-Leading
Drum	Drum	Drum	Drum	Drum	Drum
Tandem, 9" + 10"	Tandem, 9" + 10"	Single, 11"	Single, 11"	Tandem, 9" + 10"	Single, 11"
—	—	—	—	—	—
Double Wishbone	Double Wishbone	Double Wishbone	Double Wishbone	Double Wishbone	Double Wishbone
Leaf Spring	Leaf Spring	Leaf Spring	Leaf Spring	Leaf Spring	Leaf Spring
—	—	—	—	—	—
OPT	OPT	Standard	OPT	OPT	OPT
Recirculating Ball	Recirculating Ball	Recirculating Ball	Recirculating Ball	Recirculating Ball	Recirculating Ball
17.6	17.6	17.6	17.6	17.6	17.6
Integral Type	Integral Type	Integral Type	Integral Type	Integral Type	Integral Type

Item \ Area				G.C.C Countries	Europe		
Body Type				High Roof			
Vehicle Grade				Standard (With Air Conditioner)	Standard		Standard (With Air Conditioner)
Model Code				RZB50L-ZGMSKV	BB50L-ZRFRZW1	BB50R-ZRFRZW1	BB50L-ZRFSZW1
Major Dimensions & Vehicle Weights	Overall	Length	mm (in.)	6990 (275.2)	6255 (246.6)	6255 (246.6)	6990 (275.2)
		Width	mm (in.)	2025 (79.7), 2195 (86.4)*1	2025 (79.7), 2195 (86.4)*1	2025 (79.7), 2195 (86.4)*1	2025 (79.7), 2195 (86.4)*1
		Height	mm (in.)	2600 (102.4)	2585 (101.8)	2585 (101.8)	2600 (102.4)
	Wheel Base		mm (in.)	3935 (154.9)	3200 (126.0)	3200 (126.0)	3935 (154.9)
	Tread	Front	mm (in.)	1690 (66.5)	1690 (66.5)	1690 (66.5)	1690 (66.5)
		Rear	mm (in.)	1490 (58.7)	1490 (58.7)	1490 (58.7)	1490 (58.7)
	Room	Length	mm (in.)	6230 (245.3)	5490 (216.1)	5490 (216.1)	6230 (245.3)
		Width	mm (in.)	1890 (74.4)	1900 (74.8)	1900 (74.8)	1890 (74.4)
		Height	mm (in.)	1830 (72.0)	1665 (65.6)	1665 (65.6)	1830 (72.0)
	Cargo Space	Length	mm (in.)	—	—	—	—
		Width	mm (in.)	—	—	—	—
		Height	mm (in.)	—	—	—	—
	Overhang	Front	mm (in.)	1150 (45.3)	1150 (45.3)	1150 (45.3)	1150 (45.3)
		Rear	mm (in.)	1905 (75.0)	1905 (75.0)	1905 (75.0)	1905 (75.0)
	Min. Running Ground Clearance		mm (in.)	185 (7.3)	175 (6.9)	175 (6.9)	185 (7.3)
	Angle of Approach		degrees	18	17	17	18
	Angle of Departure		degrees	14	14	14	14
	Curb Weight	Front	kg (lb)	1435 - 1535 (3164 - 3384)	1400 - 1450 (3086 - 3197)	1400 - 1450 (3086 - 3197)	1645 - 1700 (3627 - 3748)
		Rear	kg (lb)	1495 - 1645 (3296 - 3629)	1450 - 1590 (3197 - 3505)	1450 - 1590 (3197 - 3505)	1595 - 1705 (3516 - 3759)
		Total	kg (lb)	2930 - 3180 (6460 - 7011)	2850 - 3040 (6283 - 6702)	2850 - 3040 (6283 - 6702)	3230 - 3475 (7121 - 7661)
	Gross Vehicle Weight	Front	kg (lb)	2170 (4784)	2020 (4453)	2020 (4453)	2400 (5291)
		Rear	kg (lb)	3140 (6923)	3160 (6967)	3160 (6967)	3270 (7209)
		Total	kg (lb)	5310 (11707)	5180 (11420)	5180 (11420)	5670 (12500)
	Fuel Tank Capacity		ℓ (Imp.gal.)	95 (20.9)	95 (20.9)	95 (20.9)	95 (20.9)
	Luggage Compartment Capacity		m^3 (cu.ft.)	0.411 (14.5)	0.411 (14.5)	0.411 (14.5)	0.411 (14.5)
Performance	Max. Speed		km / h (mph)	—	—	—	—
	Max. Cruising Speed		km / h (mph)	—	—	—	—
	Max. Permissible Speed	1st Gear	km / h (mph)	20 (12)	15 (9)	15 (9)	15 (9)
		2nd Gear	km / h (mph)	40 (24)	25 (16)	25 (16)	25 (16)
		3rd Gear	km / h (mph)	70 (43)	50 (31)	50 (31)	50 (31)
		4th Gear	km / h (mph)	115 (71)	85 (53)	85 (53)	85 (53)
		5th Gear	km / h (mph)	—	105 (65)	105 (65)	105 (65)
	Min. Turning Radius	Tire	m (ft.)	7.2 (23.6)	6.1 (20.0)	6.1 (20.0)	6.1 (20.0)
		Body	m (ft.)	7.9 (25.9)	6.8 (22.3)	6.8 (22.3)	6.8 (22.3)
Engine	Engine Type			3RZ-FE	15B-FTE	15B-FTE	15B-FTE
	Valve Mechanism			16-Valve, DOHC	16-Valve, OHV	16-Valve, OHV	16-Valve, OHV
	Bore x Stroke		mm (in.)	95.0 x 95.0 (3.74 x 3.74)	108.0 x 112.0 (4.25 x 4.41)	108.0 x 112.0 (4.25 x 4.41)	108.0 x 112.0 (4.25 x 4.41)
	Displacement		cm^3 (cu.in.)	2694 (164.4)	4104 (250.4)	4104 (250.4)	4104 (250.4)
	Compression Ratio			9.5 : 1	18.4 : 1	18.4 : 1	18.4 : 1
	Fuel System			EFI	Distributor Type	Distributor Type	Distributor Type
	Research Octane No. or Cetane No. (Diesel)			90 or higher	50 or higher	50 or more higher	50 or higher
	Max. Output (SAE-NET)		kW / rpm	112 / 4800	100 / 2600 (EEC)	100 / 2600 (EEC)	100 / 2600 (EEC)
	Max. Torque (SAE-NET)		N·m / rpm	240 / 4000	382 / 1200 - 2200 (EEC)	382 / 1200 - 2200 (EEC)	382 / 1200 - 2200 (EEC)
Engine Electrical	Battery Capacity (5HR)		Voltage & Amp. hr.	1240, 1248*3	—	—	—
	Alternator Output		Watts	960	2040	2040	2040
	Starter Output		kW	1.4	4.5	4.5	4.5
Chassis	Clutch Type			Dry, Single Plate Diaphragm	Dry, Single Plate Diaphragm	Dry, Single Plate Diaphragm	Dry, Single Plate Diaphragm
	Transmission Type			M156	H260	H260	H260
	Transmission Gear Ratio	In First		5.657	4.772	4.772	4.772
		In Second		2.818	2.795	2.795	2.795
		In Third		1.687	1.570	1.570	1.570
		In Fourth		1.000	1.000	1.000	1.000
		In Fifth		0.835	0.775	0.775	0.775
		In Sixth		—	0.619	0.619	0.619
		In O/D		—	—	—	—
		In Reverse		5.657	4.545	4.545	4.545
	Transfer Gear Ratio H4/L4			—	—	—	—
	Differential Gear Ratio (Front/Rear)			6.142	5.265	5.265	5.265
	Differential Gear Size (Front/Rear)		in.	10.5	10.5	10.5	10.5
	Brake Type	Front		Ventilated Disc	Ventilated Disc	Ventilated Disc	Ventilated Disc
		Rear		Dual-Two-Leading	Dual-Two-Leading	Dual-Two-Leading	Dual-Two-Leading
	Parking Brake Type			Drum	Drum	Drum	Drum
	Brake Booster Type and Size		in.	Tandem, 9" + 10"	Tandem, 9" + 10"	Tandem, 9" + 10"	Tandem, 9" + 10"
	Proportioning Valve Type			—	—	—	—
	Suspension Type	Front		Double Wishbone	Double Wishbone	Double Wishbone	Double Wishbone
		Rear		Leaf Spring	Leaf Spring	Leaf Spring	Leaf Spring
	Stabilizer Bar	Front		—	—	—	—
		Rear		OPT	Standard	Standard	Standard
	Steering Gear Type			Recirculating Ball	Recirculating Ball	Recirculating Ball	Recirculating Ball
	Steering Gear Ratio (Overall)			17.6	17.6	17.6	17.6
	Power Steering Type			Integral Type	Integral Type	Integral Type	Integral Type

*1 : With snokel cleaner air duct *2 : 7.00 R16 Tire (Option) *3 : Option

	General Countries					
	High Roof			Standard Roof	High Roof	Standard Roof
	Standard (With Air Conditioner)	EX	Standard (With Air Conditioner)	Standard	Standard (With Air Conditioner)	Standard
	BZB40R-ZCMSC	BZB50R-ZEMQC	BZB50L-ZCMSC	BB42R-BRMRS	BB42R-ZRMSS	BB42L-BRMRS
5	6255 (246.6)	6255 (246.6)	6990 (275.2)	6255 (246.6)	6255 (246.6)	6255 (246.6)
	2025 (79.7), 2195 (86.4)*1	2025 (79.7), 2195 (86.4)*1	2025 (79.7), 2195 (86.4)*1	2025 (79.7), 2195 (86.4)*1	2025 (79.7), 2195 (86.4)*1	2025 (79.7), 2195(86.4)*1
	2585 (101.8)	2585 (101.8)	2600 (102.4)	2430 (95.7)	2585 (101.8)	2430 (95.7)
	3935 (154.9)	3200 (126.0)	3935 (154.9)	3200 (126.0)	3200 (126.0)	3200 (126.0)
	1690 (66.5)	1690 (66.5)	1690 (66.5)	1690 (66.5)	1690 (66.5)	1690 (66.5)
10	1490 (58.7)	1490 (58.7)	1490 (58.7)	1490 (58.7)	1490 (58.7)	1490 (58.7)
	5490 (216.1)	5490 (216.1)	6230 (245.3)	5490 (216.1)	5490 (216.1)	5490 (216.1)
	1900 (74.8)	1900 (74.8)	1890 (74.4)	1900 (74.8)	1900 (74.8)	1900 (74.8)
	1830 (72.0)	1830 (72.0)	1830 (72.0)	1665 (65.6)	1830 (72.0)	1665 (65.6)
	—	—	—	—	—	—
15	—	—	—	—	—	—
	—	—	—	—	—	—
	1150 (45.3)	1150 (45.3)	1150 (45.3)	1150 (45.3)	1150 (45.3)	1150 (45.3)
	1905 (75.0)	1905 (75.0)	1905 (75.0)	1905 (75.0)	1905 (75.0)	1905 (75.0)
	175 (6.9)	175 (6.9)	185 (7.3)	175 (6.9)	175 (6.9)	175 (6.9)
20	17	17	18	17, 18*2	17	17
	14	14	14	14	14	14
	1570 - 1585 (3461 - 3494)	1335 - 1435 (2943 - 3164)	1645 - 1700 (3627 - 3748)	1400 - 1480 (3086 - 3263)	1490 - 1550 (3285 - 3417)	1400 - 1480 (3086 - 3263)
	1460 - 1475 (3219 - 3252)	1425 - 1575 (3142 - 3472)	1595 - 1705 (3516 - 3759)	1440 - 1600 (3175 - 3527)	1490 - 1590 (3285 - 3616)	1440 - 1650 (3175 - 3638)
	3030 - 3060 (6680 - 6946)	2760 - 3010 (6085 - 6636)	3230 - 3475 (7121 - 7661)	2840 - 3080 (6261 - 6790)	2980 - 3190 (6570 - 7033)	2848 - 3130 (6261 - 6900)
25	1730 (3814)	1820 (4012)	2400 (5291)	2020 (4453)	2020 (4453)	2020 (4453)
	2270 (5004)	2690 (5930)	3270 (7209)	3160 (6967)	3160 (6967)	3160 (6967)
	4000 (8818)	4510 (9943)	5670 (12500)	5180 (11420)	5180 (11420)	5180 (11420)
	122 (26.8)	95 (20.9)	95 (20.9)	95 (20.9)	95 (20.9)	95 (20.9)
	0.411 (14.5)	0.411 (14.5)	0.411 (14.5)	0.411 (14.5)	0.411 (14.5)	0.411 (14.5)
30	—	—	—	—	—	—
	—	—	—	—	—	—
	15 (9)	15 (9)	15 (9)	15 (9)	15 (9)	15 (9)
	25 (16)	25 (16)	25 (16)	30 (19)	30 (19)	30 (19)
	50 (31)	50 (31)	50 (31)	50 (31)	50 (31)	50 (31)
35	85 (53)	85 (53)	85 (53)	85 (53)	85 (53)	85 (53)
	—	—	—	—	—	—
	6.1 (20.0)	6.1 (20.0)	6.1 (20.0)	6.1 (20.0)	6.1 (20.0)	6.1 (20.0)
	6.8 (22.3)	6.8 (22.3)	6.8 (22.3)	6.8 (22.3)	6.8 (22.3)	6.8 (22.3)
	1BZ-FPE	1BZ-FPE	1BZ-FPE	14B	14B	14B
40	16-Valve, OHV	16-Valve, OHV	16-Valve, OHV	8-Valve, OHV	8-Valve, OHV	8-Valve, OHV
	108.0 x 112.0 (4.25 x 4.41)	108.0 x 112.0 (4.25 x 4.41)	108.0 x 112.0 (4.25 x 4.41)	102.0 x 112.0 (4.02 x 4.41)	102.0 x 112.0 (4.02 x 4.41)	102.0 x 112.0 (4.02 x 4.41)
	4104 (250.4)	4104 (250.4)	4104 (250.4)	3661 (223.4)	3661 (223.4)	3661 (223.4)
	9.5 : 1	9.5 : 1	9.5 : 1	18.0 : 1	18.0 : 1	18.0 : 1
	Carburetor (Electronically Controlled)	Carburetor (Electronically Controlled)	Carburetor (Electronically Controlled)	Distributor Type	Distributor Type	Distributor Type
45	100 or higher	100 or higher	100 or higher	50 or higher	50 or higher	50 or higher
	85 / 3600	85 / 3600	85 / 3600	72 / 3400	72 / 3400	72 / 3400
	306 / 2000	306 / 2000	306 / 2000	240 / 1800	240 / 1800	240 / 1800
	12-64	12-64	12-64	12-52, 12-40*3	12 -40	12-52, 12-40*3, 12-64*3
	1440	1200	1200	540, 1440*3	540, 1440*3	1440
50	2.5	2.5	2.5	2.5, 4.5*3	4.5	4.5
	Dry, Single Plate Diaphragm	Dry, Single Plate Diaphragm	Dry, Single Plate Diaphragm	Dry, Single Plate Diaphragm	Dry, Single Plate Diaphragm	Dry, Single Plate Diaphragm
	M155	M155	M155	M152	M152	M152
	4.535	4.535	4.535	4.802	4.802	4.802
	2.858	2.858	2.858	2.792	2.792	2.792
55	1.600	1.600	1.600	1.694	1.694	1.694
	1.000	1.000	1.000	1.000	1.000	1.000
	0.744	0.744	0.744	0.788	0.788	0.788
	—	—	—	—	—	—
	—	—	—	—	—	—
60	5.043	5.043	5.043	5.339	5.339	5.339
	—	—	—	—	—	—
	5.625	5.625	5.625	5.125, 5.625*3	5.625, 5.857*3	5.125, 5.625*3
	10.5	10.5	10.5	10.5	10.5	10.5
	Two-Leading Drum	Two-Leading Drum	Two-Leading Drum	Two-Leading Drum, Ventilated Disc*3	Two-Leading Drum, Ventilated Disc*3	Two-Leading Drum, Ventilated Disc*3
65	Dual-Two-Leading	Dual-Two-Leading	Dual-Two-Leading	Dual-Two-Leading	Dual-Two-Leading	Dual-Two-Leading
	Drum	Drum	Drum	Drum	Drum	Drum
	Tandem, 9" + 10"	Tandem, 9" + 10"	Tandem, 9" + 10"	Single, 11"	Single, 11"	Single, 11"
	—	—	—	—	—	—
	Double Wishbone	Double Wishbone	Double Wishbone	Double Wishbone	Double Wishbone	Double Wishbone
70	Leaf Spring	Leaf Spring	Leaf Spring	Leaf Spring	Leaf Spring	Leaf Spring
	—	—	—	—	—	—
	Standard	Standard	Standard	Standard	Standard	Standard
	Recirculating Ball	Recirculating Ball	Recirculating Ball	Recirculating Ball	Recirculating Ball	Recirculating Ball
	17.6	17.6	17.6	17.6	17.6	17.6
75	Integral Type	Integral Type	Integral Type	Integral Type	Integral Type	Integral Type

Item \ Area				General Countries			
Body Type				Standard Roof	High Roof		
Vehicle Grade				Standard (With Air Conditioner)	Standard		EX
Model Code				BB42L-BRMSS	BB42L-ZRMRS	BB42L-ZRMSS	BB50R-ZEMQZ
Major Dimensions & Vehicle Weights	Overall	Length	mm (in.)	6255 (246.6)	6255 (246.6)	6255 (246.6)	6990 (275.2)
		Width	mm (in.)	2025 (79.7), 2195(86.4)*1	2025 (79.7), 2195(86.4)*1	2025 (79.7), 2195(86.4)*1	2025 (79.7)
		Height	mm (in.)	2430 (95.7)	2585 (101.8)	2585 (101.8)	2600 (102.4)
	Wheel Base		mm (in.)	3200 (126.0)	3200 (126.0)	3200 (126.0)	3935 (154.9)
	Tread	Front	mm (in.)	1690 (66.5)	1690 (66.5)	1690 (66.5)	1690 (66.5)
		Rear	mm (in.)	1490 (58.7)	1490 (58.7)	1490 (58.7)	1490 (58.7)
	Room	Length	mm (in.)	5490 (216.1)	5490 (216.1)	5490 (216.1)	6230 (245.3)
		Width	mm (in.)	1900 (74.8)	1900 (74.8)	1900 (74.8)	1890 (74.4)
		Height	mm (in.)	1665 (65.6)	1665 (65.6)	1665 (65.6)	1830 (72.0)
	Cargo Space	Length	mm (in.)	—	—	—	—
		Width	mm (in.)	—	—	—	—
		Height	mm (in.)	—	—	—	—
	Overhang	Front	mm (in.)	1150 (45.3)	1150 (45.3)	1150 (45.3)	1150 (45.3)
		Rear	mm (in.)	1905 (75.0)	1905 (75.0)	1905 (75.0)	1905 (75.0)
	Min. Running Ground Clearance		mm (in.)	175 (6.9)	175 (6.9)	175 (6.9)	175 (6.9)
	Angle of Approach		degrees	17	17	17	18
	Angle of Departure		degrees	14	14	14	14
	Curb Weight	Front	kg (lb)	1490 - 1570 (3285 - 3461)	1400 - 1450 (3086 - 3197)	1490 - 1550 (3285 - 3417)	1710 - 1725 (3770 - 3803)
		Rear	kg (lb)	1480 - 1690 (3263 - 3926)	1450 - 1590 (3197 - 3505)	1490 - 1640 (3285 - 3616)	1620 - 1650 (3571 - 3638)
		Total	kg (lb)	2970 - 3260 (6548 - 7187)	2850 - 3040 (6283 - 6702)	2980 - 3190 (6570 - 7033)	3330 - 3375 (7341 - 7441)
	Gross Vehicle Weight	Front	kg (lb)	2020 (4453)	2020 (4453)	2020 (4453)	2100 (4630)
		Rear	kg (lb)	3160 (6967)	3160 (6967)	3160 (6967)	2900 (5952)
		Total	kg (lb)	5180 (11420)	5180 (11420)	5180 (11420)	4800 (10582)
	Fuel Tank Capacity		ℓ (Imp.gal.)	95 (20.9)	95 (20.9)	95 (20.9)	95 (20.9)
	Luggage Compartment Capacity		m^3 (cu.ft.)	0.411 (14.5)	0.411 (14.5)	0.411 (14.5)	0.411 (14.5)
Performance	Max. Speed		km / h (mph)	—	—	—	—
	Max. Cruising Speed		km / h (mph)	—	—	—	—
	Max. Permissible Speed	1st Gear	km / h (mph)	15 (9)	15 (9)	15 (9)	20 (12)
		2nd Gear	km / h (mph)	30 (19)	30 (19)	30 (19)	35 (22)
		3rd Gear	km / h (mph)	50 (31)	50 (31)	50 (31)	60 (37)
		4th Gear	km / h (mph)	85 (53)	85 (53)	85 (53)	100 (62)
		5th Gear	km / h (mph)	—	—	—	—
	Min. Turning Radius	Tire	m (ft.)	6.1 (20.0)	6.1 (20.0)	6.1 (20.0)	7.2 (23.6)
		Body	m (ft.)	6.8 (22.3)	6.8 (22.3)	6.8 (22.3)	7.9 (25.9)
Engine	Engine Type			14B	14B	14B	15B-FTE
	Valve Mechanism			8-Valve, OHV	8-Valve, OHV	8-Valve, OHV	4-Valve, OHV
	Bore x Stroke		mm (in.)	102.0 x 112.0 (4.02 x 4.41)	102.0 x 112.0 (4.02 x 4.41)	102.0 x 112.0 (4.02 x 4.41)	108.0 x 112.0 (4.25 x 4.41)
	Displacement		cm^3 (cu.in.)	3661 (223.4)	3661 (223.4)	3661 (223.4)	4104 (250.4)
	Compression Ratio			18.0 : 1	18.0 : 1	18.0 : 1	18.4 : 1
	Fuel System			Distributor Type	Distributor Type	Distributor Type	Distributor Type
	Research Octane No. or Cetane No. (Diesel)			50 or more	50 or more	50 or more	50 or more
	Max. Output		kW / rpm	72 / 3400	72 / 3400	72 / 3400	100 / 2600 (EEC)
	Max. Torque (EEC)		N·m / rpm	240 / 1800	240 / 1800	240 / 1800	382 / 1200 - 2200 (EEC)
Engine Electrical	Battery Capacity (5HR)		Voltage & Amp. hr.	12-40, 12-48*3	12-52, 12-40*3	12-40, 12-48*3	12-48
	Alternator Output		Watts	540, 1440*3	540, 1440*3	1440	1440
	Starter Output		kW	2.5, 4.5*3	2.5, 4.5*3	4.5	4.5
Chassis	Clutch Type			Dry Single	Dry Single	Dry Single	Dry, Single
	Transmission Type			M152	M152	M152	M155
	Transmission Gear Ratio	In First		4.802	4.802	4.802	4.535
		In Second		2.792	2.792	2.792	2.858
		In Third		1.694	1.694	1.694	1.600
		In Fourth		1.000	1.000	1.000	1.000
		In Fifth		0.788	0.788	0.788	0.744
		In Sixth		—	—	—	—
		In O/D		—	—	—	—
		In Reverse		5.339	5.339	5.339	5.043
	Transfer Gear Ratio H4/L4			—	—	—	—
	Differential Gear Ratio (Front/Rear)			5.625, 5.857*3	5.125, 5.625*3, 6.142*3	5.625, 5.857*3	5.625
	Differential Gear Size (Front/Rear)		in.	10.5	10.5	10.5	10.5
	Brake Type	Front		Two-Leading Drum, Ventilated Disc*3	Two-Leading Drum, Ventilated Disc*3	Two-Leading Drum, Ventilated Disc*3	Two-Leading Drum, Ventilated Disc*3
		Rear		Dual-Two-Leading	Dual-Two-Leading	Dual-Two-Leading	Dual-Two-Leading
	Parking Brake Type			Drum	Drum	Drum	Drum
	Brake Booster Type and Size		in.	Single, 11”	Single, 11”	Single, 11”	Tandem, 9” + 10”
	Proportioning Valve Type			—	—	—	—
	Suspension Type	Front		Double Wishbone	Double Wishbone	Double Wishbone	Double Wishbone
		Rear		Leaf Spring	Leaf Spring	Leaf Spring	Leaf Spring
	Stabilizer Bar	Front		—	—	—	—
		Rear		—	—	—	Standard
	Steering Gear Type			Recirculating Ball	Recirculating Ball	Recirculating Ball	Recirculating Ball
	Steering Gear Ratio (Overall)			17.6	17.6	17.6	17.6
	Power Steering Type			Integral Type	Integral Type	Integral Type	Integral Type

*1 : With snokel cleaner air duct *2 : 7.00 R16 Tire (Option) *3 : Option

General Countries					
High Roof					
EX	Standard	Standard (With Air Conditioner)			Standard
BB59R-ZEMQZ5	BB50L-ZCMSZ	BB50L-ZEFSZ	BB58L-ZEFSZ	BB50L-ZGMSW	BB50L-ZGMRW
7725 (304.1)	6255 (246.6)	6990 (275.2)	6990 (275.2)	6990 (275.2)	6990 (275.2)
2025 (79.7)	2025 (79.7), 2195 (86.4)*1	2025 (79.7)	2025 (79.7)	2025 (79.7), 2195 (86.4)*1	2025 (79.7), 2195 (86.4)*1
2600 (102.4)	2585 (101.8)	2600 (102.4)	2600 (102.4)	2600 (102.4)	2600 (102.4)
3935 (154.9)	3200 (126.0)	3935 (154.9)	3935 (154.9)	3935 (154.9)	3935 (154.9)
1690 (66.5)	1690 (66.5)	1690 (66.5)	1690 (66.5)	1690 (66.5)	1690 (66.5)
1490 (58.7)	1490 (58.7)	1490 (58.7)	1490 (58.7)	1490 (58.7)	1490 (58.7)
6985 (275.0)	5490 (216.1)	6230 (245.3)	6230 (245.3)	6230 (245.3)	6230 (245.3)
1890 (74.4)	1900 (74.8)	1890 (74.4)	1890 (74.4)	1890 (74.4)	1890 (74.4)
1830 (72.0)	1665 (65.6)	1830 (72.0)	1830 (72.0)	1830 (72.0)	1830 (72.0)
—	—	—	—	—	—
—	—	—	—	—	—
—	—	—	—	—	—
1150 (45.3)	1150 (45.3)	1150 (45.3)	1150 (45.3)	1150 (45.3)	1150 (45.3)
1905 (75.0)	1905 (75.0)	1905 (75.0)	1905 (75.0)	1905 (75.0)	1905 (75.0)
185 (7.3)	175 (6.9)	185 (7.3)	185 (7.3)	185 (7.3)	185 (7.3)
18	17	18	18	18	18
14	14	14	14	14	14
1805 - 1820 (3979 - 4012)	1400 - 1450 (3086 - 3197)	1810 - 1850 (3990 - 4079)*4	1760 -1765 (3880 - 3891)	1720 - 1770 (3792 - 3902)	1630 - 1680 (3594 - 3704)
1810 - 1840 (3990 - 4057)	1450 - 1590 (3197 - 3505)	1740 - 1905 (3836 - 4206)*4	1650 - 1665 (3638 - 3671)	1565 - 1695 (3450 - 3737)	1520 - 1635 (3362 - 3649)
3615 - 3660 (7970 - 8069)	2850 - 3040 (6283 - 6702)	3590 - 3715 (7915 - 8190)*4	3410 - 3430 (7518 - 7562)	3285 - 3465 (7242 - 7639)	3155 - 3335 (6956 - 7353)
2250 (4960)	2020 (4453)	2400 (5291)	2305 (5082)	2400 (5291)	2400 (5291)
3050 (6724)	3160 (6967)	3270 (7209)	2990 (6592)	3270 (7209)	3270 (7209)
5300 (11684)	5180 (11420)	5670 (12500)	5295 (11673)	5670 (12500)	5670 (12500)
95 (20.9)	95 (20.9)	95 (20.9)	95 (20.9)	95 (20.9)	95 (14.5)
0.441 (14.5)	0.441 (14.5)	0.441 (14.5)	0.441 (14.5)	0.441 (14.5)	0.441 (14.5)
—	—	—	—	—	—
—	—	—	—	—	—
20 (12)	20 (12)	15 (9)	15 (9)	20 (12)	20 (12)
35 (22)	35 (22)	25 (16)	25 (16)	35 (22)	35 (22)
60 (37)	60 (37)	50 (31)	50 (31)	60 (37)	60 (37)
100 (62)	100 (62)	85 (53)	85 (53)	100 (62)	100 (62)
—	—	105 (65)	105 (65)	—	—
7.2 (23.6)	7.2 (23.6)	7.2 (23.6)	7.2 (23.6)	7.2 (23.6)	7.2 (23.6)
7.9 (25.9)	7.9 (25.9)	7.9 (25.9)	7.9 (25.9)	7.9 (25.9)	7.9 (25.9)
15B-FTE	15B-FTE	15B-FTE	15B-FTE	15B-FT	15B-FT
16-Valve, OHV	16-Valve, OHV	16-Valve, OHV	16-Valve, OHV	16-Valve, OHV	16-Valve, OHV
108.0 x 112.0 (4.25 x 4.41)	108.0 x 112.0 (4.25 x 4.41)	108.0 x 112.0 (4.25 x 4.41)	108.0 x 112.0 (4.25 x 4.41)	108.0 x 112.0 (4.25 x 4.41)	108.0 x 112.0 (4.25 x 4.41)
4104 (250.4)	4104 (250.4)	4104 (250.4)	4104 (250.4)	4104 (250.4)	4104 (250.4)
18.4 : 1	18.4 : 1	18.4 : 1	18.4 : 1	18.5 : 1	18.5 : 1
Distributor Type	Distributor Type	Distributor Type	Distributor Type	In-Line Type	In-Line Type
50 or higher	50 or higher	50 or higher	50 or higher	50 or higher	50 or higher
100/2600 (EEC)	100/2600 (EEC)	100/2600 (EEC)	107/2600 (EEC)	100/3000 (EEC)	100/3000 (EEC)
382/1200 - 2200 (EEC)	382/1200 - 2200 (EEC)	382/1200 - 2200 (EEC)	393/1800 (EEC)	360/1600 (EEC)	360/1600 (EEC)
12-48	12-48	12-48, 12-64*3	12-48	12-48	12-48
1440	1440	2040	2040	1440	1440
4.5	4.5	4.5	4.5	4.5	4.5
Dry Single Plate Diaphragm	Dry Single Plate Diaphragm	Dry Single Plate Diaphragm	Dry Single Plate Diaphragm	Dry Single Plate Diaphragm	Dry Single Plate Diaphragm
M155	M155	H260	H260	M155	M155
4.535	4.535	4.772	4.772	4.535	4.535
2.858	2.858	2.795	2.795	2.858	2.858
1.600	1.600	1.570	1.570	1.600	1.600
1.000	1.000	1.000	1.000	1.000	1.000
0.744	0.744	0.775	0.775	0.744	0.744
—	—	0.619	0.619	—	—
—	—	—	—	—	—
5.043	5.043	4.545	4.545	5.043	5.043
—	—	—	—	—	—
5.625	5.625	5.625	5.625	5.625	5.625
10.5	10.5	10.5	10.5	10.5	10.5
Ventilated Disc	Ventilated Disc	Ventilated Disc	Two-Leading Drum, Ventilated Disc*3	Two-Leading Drum, Ventilated Disc*3	Two-Leading Drum, Ventilated Disc*3
Dual-Two-Leading	Dual-Two-Leading	Dual-Two-Leading	Dual-Two-Leading	Dual-Two-Leading	Dual-Two-Leading
Drum	Drum	Drum	Drum	Drum	Drum
Tandem, 9" + 10"	Tandem, 9" + 10"	Tandem, 9" + 10"	Tandem, 9" + 10"	Tandem, 9" + 10"	Tandem, 9" + 10"
—	—	LSP and BV	—	—	—
Double Wishbone	Double Wishbone	Double Wishbone	Double Wishbone	Double Wishbone	Double Wishbone
Leaf Spring	Leaf Spring	Leaf Spring	Leaf Spring	Leaf Spring	Leaf Spring
—	—	—	—	—	—
Standard	Standard	Standard	Srandard	OPT	OPT
Recirculating Ball	Recirculating Ball	Recirculating Ball	Recirculating Ball	Recirculating Ball	Recirculating Ball
17.6	17.6	17.6	17.6	17.6	17.6
Integral Type	Integral Type	Integral Type	Integral Type	Integral Type	Integral Type

Item \ Area				General Countries			
Body Type				High Roof	Standard Roof	High Roof	Standard Roof
Vehicle Grade				EX	Standard		Standard (With Air Conditioner)
Model Code				HZB50L-ZCMQS	HZB50L-BGMRS	HZB50L-ZGMRS	HZB50L-BGMSS
Major Dimensions & Vehicle Weights	Overall	Length	mm (in.)	6990 (275.2)	6990 (275.2)	6990 (275.2)	6990 (275.2)
		Width	mm (in.)	2025 (79.7), 2195(86.4)*1	2025 (79.7), 2195 (86.4)*1	2025 (79.7), 2195 (86.4)*1	2025 (79.7), 2195 (86.4)*1
		Height	mm (in.)	2600 (102.4)	2600 (102.4)	2600 (102.4)	2445 (96.2)
	Wheel Base		mm (in.)	3935 (154.9)	3935 (154.9)	3935 (154.9)	3935 (154.9)
	Tread	Front	mm (in.)	1690 (66.5)	1690 (66.5)	1690 (66.5)	1690 (66.5)
		Rear	mm (in.)	1490 (58.7)	1490 (58.7), 1554 (61,2)*4	1490 (58.7)	1490 (58.7), 1544 (61.2)*4
	Room	Length	mm (in.)	6230 (24.5)	6230 (24.5)	6230 (24.5)	6230 (24.5)
		Width	mm (in.)	1890 (74.4)	1830 (72.0)	1890 (74.4)	1890 (74.4)
		Height	mm (in.)	1830 (72.0)	1665 (65.6)	1830 (72.0)	1665 (65.5)
	Cargo Space	Length	mm (in.)	—	—	—	—
		Width	mm (in.)	—	—	—	—
		Height	mm (in.)	—	—	—	—
	Overhang	Front	mm (in.)	1150 (45.3)	1150 (45.3)	1150 (45.3)	1150 (45.3)
		Rear	mm (in.)	1905 (75.0)	1905 (75.0)	1905 (75.0)	1905 (75.0)
	Min. Running Ground Clearance		mm (in.)	185 (7.3)	185 (7.3)	185 (7.3)	185 (7.3)
	Angle of Approach		degrees	18	18	18	18
	Angle of Departure		degrees	14	14	14	14
	Curb Weight	Front	kg (lb)	1670 - 1720 (3682 - 3792)	1555 - 1620 (3428 - 3571)	1555 - 1595 (3428 - 3516)	1645 - 1725 (3627 - 3803)
		Rear	kg (lb)	1570 - 1640 (3461 - 3616)	1545 - 1730 (3406 - 3814)	1555 - 1675 (3428 - 3693)	1585 - 1780 (3494 - 3924)
		Total	kg (lb)	3240 - 3360 (7143 - 7408)	3100 - 3350 (6834 - 7385)	3110 - 3270 (6856 - 7209)	3230 - 3505 (7121 - 7727)
	Gross Vehicle Weight	Front	kg (lb)	2170 (4784)	2400 (5291)	2400 (5291)	2400 (5291)
		Rear	kg (lb)	2820 (6217)	3270 (7209)	3270 (7209)	3270 (7209)
		Total	kg (lb)	4990 (11001)	5670 (12500)	5670 (12500)	5670 (12500)
	Fuel Tank Capacity		ℓ (Imp.gal.)	95 (20.9)	95 (20.9)	95 (20.9)	95 (20.9)
	Luggage Compartment Capacity		m^3 (cu.ft.)	0.411 (14.5)	0.411 (14.5)	0.411 (14.5)	0.411 (14.5)
Performance	Max. Speed		km / h (mph)	—	—	—	—
	Max. Cruising Speed		km / h (mph)	—	—	—	—
	Max. Permissible Speed	1st Gear	km / h (mph)	20 (12)	20 (12)	20 (12)	20 (12)
		2nd Gear	km / h (mph)	35 (20)	35 (20)	35 (20)	35 (20)
		3rd Gear	km / h (mph)	60 (37)	60 (37)	60 (37)	60 (37)
		4th Gear	km / h (mph)	100 (62)	100 (62)	100 (62)	100 (62)
		5th Gear	km / h (mph)	—	—	—	—
	Min. Turning Radius	Tire	m (ft.)	7.2 (23.6)	7.2 (23.6)	7.2 (23.6)	7.2 (23.6)
		Body	m (ft.)	7.9 (25.9)	7.9 (25.9)	7.9 (25.9)	7.9 (25.9)
Engine	Engine Type			1HZ	1HZ	1HZ	1HZ
	Valve Mechanism			12-Valve, OHC	12-Valve, OHC	12-Valve, OHC	12-Valve, OHC
	Bore x Stroke		mm (in.)	94.0 x 100.0 (3.70 x 3.94)	94.0 x 100.0 (3.70 x 3.94)	94.0 x 100.0 (3.70 x 3.94)	94.0 x 100.0 (3.70 x 3.94)
	Displacement		cm^3 (cu.in.)	4164 (254.1)	4164 (254.1)	4164 (254.1)	4164 (254.1)
	Compression Ratio			22.4 : 1	22.4 : 1	22.4 : 1	22.4 : 1
	Fuel System			Distributor Type	Distributor Type	Distributor Type	Distributor Type
	Research Octane No. or Cetane No. (Diesel)			50 or higher	50 or higher	50 or higher	50 or higher
	Max. Output (SAE-NET)		kW / rpm	96 / 3800	96 / 3800	96 / 3800	96 / 3800
	Max. Torque (SAE-NET)		N·m / rpm	285 / 2200	285 / 2200	285 / 2200	285 / 2200
Engine Electrical	Battery Capacity (5HR)		Voltage & Amp. hr.	12-48	12-52, 12-40*3, 12-64*3	12-52, 12-40*3	12-40, 12-48*3, 12-64*3
	Alternator Output		Watts	1440	540, 1440*3	540, 1440*3	1440
	Starter Output		kW	4.5	2.5, 4.5*3	2.5, 4.5*3	4.5
Chassis	Clutch Type			Dry, Single Plate Diaphragm	Dry, Single Plate Diaphragm	Dry, Single Plate Diaphragm	Dry, Single Plate Diaphragm
	Transmission Type			M155	M155	M155	M155
	Transmission Gear Ratio	In First		4.535	4.535	4.535	4.535
		In Second		2.858	2.858	2.858	2.858
		In Third		1.600	1.600	1.600	1.600
		In Fourth		1.000	1.000	1.000	1.000
		In Fifth		0.744	0.744	0.744	0.744
		In Sixth		—	—	—	—
		In O/D		—	—	—	—
		In Reverse		5.043	5.043	5.043	5.043
	Transfer Gear Ratio H4/L4			—	—	—	—
	Differential Gear Ratio (Front/Rear)			5.375, 5.625*3	5.375, 5.625*3	5.375, 5.625*3	5.625, 5.857*3
	Differential Gear Size (Front/Rear)		in.	10.5	10.5	10.5	10.5
	Brake Type	Front		Two-Leading Drum, Ventilated Disc*3	Two-Leading Drum, Ventilated Disc*3	Two-Leading Drum, Ventilated Disc*3	Two-Leading Drum, Ventilated Disc*3
		Rear		Dual-Two-Leading	Dual-Two-Leading	Dual-Two-Leading	Dual-Two-Leading
	Parking Brake Type			Drum	Drum	Drum	Drum
	Brake Booster Type and Size		in.	Tamdem, 9" + 10"	Tamdem, 9" + 10"	Tandem, 9" + 10"	Tamdem, 9" + 10"
	Proportioning Valve Type			—	—	—	—
	Suspension Type	Front		Double Wishbone	Double Wishbone	Double Wishbone	Double Wishbone
		Rear		Leaf Spring	Leaf Spring	Leaf Spring	Leaf Spring
	Stabilizer Bar	Front		—	—	—	—
		Rear		Standard	OPT	OPT	OPT
	Steering Gear Type			Recirculating Ball	Recirculating Ball	Recirculating Ball	Recirculating Ball
	Steering Gear Ratio (Overall)			17.6	17.6	17.6	17.6
	Power Steering Type			Integral Type	Integral Type	Integral Type	Integral Type

*1 : With snokel cleaner air duct *2 : 7.00 R16 Tire (Option) *3 : Option *4 : For Jordan

General Countries					
High Roof				Standard Roof	
Standard (With Air Conditioner)		Standard	Standard (With Air Conditioner)	Standard	Standard (With Air Conditioner)
HZB50L-ZGMSS	HZB50R-ZGMSS	RZB40L-BRMRK	RZB40L-BRMSK	RZB40L-ZRMSK	RZB50-ZGMSK
6990 (275.2)	6990 (275.2)	6255 (246.6)	6255 (246.6)	6255 (246.6)	6255 (246.6)
2025 (79.7), 2195 (86.4)*1	2025 (79.7), 2195 (86.4)*1	2025 (79.7), 2195 (86.4)*1	2025 (79.7), 2195 (86.4)*1	2025 (79.7), 2195 (86.4)*1	2025 (79.7), 2195 (86.4)*1
2600 (102.4)	2600 (102.4)	2600 (102.4)	2430 (95.7)	2585 (101.8)	2600 (102.4)
3935 (154.9)	3935 (154.9)	3200 (126.0)	3200 (126.0)	3200 (126.0)	3935 (154.9)
1690 (66.5)	1690 (66.5)	1690 (66.5)	1690 (66.5)	1690 (66.5)	1690 (66.5)
1490 (58.7)	1490 (58.7)	1490 (58.7)	1490 (58.7)	1490 (58.7)	1490 (58.7)
6230 (24.5)	6230 (245.3)	5490 (216.1)	5490 (216.1)	5490 (216.1)	6230 (245.3)
1890 (74.4)	1890 (74.4)	1900 (74.8)	1900 (74.8)	1900 (74.8)	1890 (74.4)
1830 (72.0)	1830 (72.0)	1665 (65.6)	1665 (65.6)	1830 (72.0)	1830 (72.0)
—	—	—	—	—	—
—	—	—	—	—	—
—	—	—	—	—	—
1150 (45.3)	1150 (45.3)	1150 (45.3)	1150 (45.3)	1150 (45.3)	1150 (45.3)
1905 (75.0)	1905 (75.0)	1905 (75.0)	1905 (75.0)	1905 (75.0)	1905 (75.0)
185 (7.3)	185 (7.3)	175 (6.9)	175 (6.9)	175 (6.9)	185 (7.3)
18	18	17	17	17	17
14	14	14	14	14	14
1645 - 1695 (3627 - 3737)	1645 - 1695 (3627 - 3737)	1240 - 1360 (2734 - 2998)	1330 - 1450 (2932 - 3197)	1330 - 1430 (2932 - 3153)	1430 - 1520 (3153 - 3351)
1595 - 1725 (3616 - 3803)	1595 - 1725 (3516 - 3803)	1380 - 1620 (3042 - 3751)	1420 - 1660 (3131 - 3660)	1430 - 1620 (3153 - 3571)	1490 - 1670 (3285 - 3682)
3240 - 3420 (7143 - 7540)	3240 - 3420 (7143 - 7540)	2620 - 2980 (5776 -6570)	2750 - 3110 (6063 - 6856)	2760 - 3050 (6086 - 6724)	2920 - 3190 (6437 - 7033)
2400 (5291)	2400 (5291)	2020 (4453)	2020 (4453)	2020 (4453)	2170 (4748)
3270 (7209)	3270 (7209)	2990 (6592)	2990 (6592)	2990 (6592)	3140 (2923)
5670 (12500)	5670 (12500)	5010 (11045)	5010 (11045)	5010 (11045)	5310 (11707)
95 (20.9)	95 (20.9)	95 (20.9)	95 (20.9)	95 (20.9)	95 (20.9)
0.411 (14.5)	0.411 (14.5)	0.411 (14.5)	0.411 (14.5)	0.411 (14.5)	0.411 (14.5)
—	—	—	—	—	—
—	—	—	—	—	—
20 (12)	20 (12)	20 (12)	20 (12)	20 (12)	20 (12)
35 (20)	35 (20)	40 (24)	40 (24)	40 (24)	40 (24)
60 (37)	60 (37)	70 (43)	70 (43)	70 (43)	70 (43)
100 (62)	100 (62)	115 (71)	115 (71)	115 (71)	115 (71)
—	—	—	—	—	—
7.2 (23.6)	7.2 (23.6)	6.1 (20.0)	6.1 (20.0)	6.1 (20.0)	7.2 (23.6)
7.9 (25.9)	7.9 (25.9)	6.8 (22.3)	6.8 (22.3)	6.8 (22.3)	7.9 (25.9)
1HZ	1HZ	3RZ-FE	3RZ-FE	3RZ-FE	3RZ-FE
12-Valve, OHC	12-Valve, OHC	16-Valve, DOHC	16-Valve, DOHC	16-Valve, DOHC	16-Valve, DOHC
94.0 x 100.0 (3.70 x 3.94)	94.0 x 100.0 (3.70 x 3.94)	95.0 x 95.0 (3.74 x 3.74)	95.0 x 95.0 (3.74 x 3.74)	95.0 x 95.0 (3.74 x 3.74)	95.0 x 95.0 (3.74 x 3.74)
4164 (254.1)	4164 (254.1)	2694 (164.4)	2694 (164.4)	2694 (164.4)	2694 (164.4)
22.4 : 1	22.4 : 1	9.5 : 1	9.5 : 1	9.5 : 1	9.5 : 1
Distributor Type	Distributor Type	EFI	EFI	EFI	EFI
50 or higher	50 or higher	90 or higher	90 or higher	90 or higher	90 or higher
96 / 3800	96 / 3800	108 / 4800	108 / 4800	112 / 4800	112 / 4800
285 / 2200	285 / 2200	230 / 4000	230 / 4000	240 / 4000	240 / 4000
12-40, 12-48*3, 12-64*3	12-40	12-40, 12-48*3	12-40, 12-48*3	12-40, 12-48*3	12-40, 12-48*3
1440	1440	840	960	960	960
4.5	4.5	1.4	1.4	1.4	1.4
Dry, Single Plate Diaphragm	Dry, Single Plate Diaphragm	Dry, Single Plate Diaphragm	Dry, Single Plate Diaphragm	Dry, Single Plate Diaphragm	Dry, Single Plate Diaphragm
M155	M155	M156	M156	M156	M156
4.535	4.535	5.657	5.657	5.657	5.657
2.858	2.858	2.818	2.818	2.818	2.818
1.600	1.600	1.687	1.687	1.687	1.687
1.000	1.000	1.000	1.000	1.000	1.000
0.744	0.744	0.835	0.835	0.835	0.835
—	—	—	—	—	—
—	—	—	—	—	—
5.043	5.043	5.657	5.657	5.657	5.657
—	—	—	—	—	—
5.625, 5.857*3	5.625, 5.875*3	5.857	5.857	5.857	5.857
10.5	10.5	10.5	10.5	10.5	10.5
Two-Leading Drum, Ventilated Disc*3	Two-Leading Drum, Ventilated Disc*3	Two-Leading Drum, Ventilated Disc*3	Two-Leading Drum, Ventilated Disc*3	Two-Leading Drum, Ventilated Disc*3	Two-Leading Drum, Ventilated Disc*3
Dual-Two-Leading	Dual-Two-Leading	Dual-Two-Leading	Dual-Two-Leading	Two-Leading Drum	Ventilated Disc
Drum	Drum	Drum	Drum	Drum	Drum
Tamdem, 9" + 10"	Tamdem, 9" + 10"	Single, 11"	Single, 11"	Tandem, 9" + 10"	Tandem, 9" + 10"
—	—	—	—	—	—
Double Wishbone	Double Wishbone	Double Wishbone	Double Wishbone	Double Wishbone	Double Wishbone
Leaf Spring	Leaf Spring	Leaf Spring	Leaf Spring	Leaf Spring	Leaf Spring
—	—	—	—	—	—
OPT	OPT	OPT	OPT	OPT	OPT
Recirculating Ball	Recirculating Ball	Recirculating Ball	Recirculating Ball	Recirculating Ball	Recirculating Ball
17.6	17.6	17.6	17.6	17.6	17.6
Integral Type	Integral Type	Integral Type	Integral Type	Integral Type	Integral Type

– MEMO –

HIACE

OUTLINE OF NEW FEATURES

The following changes are made for the new Hiace.

1. All Engines

The TOYOTA genuine super long life coolant (SLLC) has been adopted. As result, the maintenance interval has been extended.

2. 2RZ-E Engine

To enable the manual transmission model with the 2RZ-E engine for Australia to comply with the STEP2 exhaust emission regulations, a TWC (Three-Way Catalytic Converter) has been added and an oxygen sensor has been installed in front of the TWC.

3. Snorkel

The optional snorkel on the models for Australia has been discontinued.

4. Rear Differential

The differential ratio on the manual transmission model with the 2RZ-E engine for Australia has been changed from 4.300 to 4.100.

5. Speed Warning

A speed warning has been provided on the models for Nigeria.

6. Propeller Shaft Protector

The propeller shaft protector on the commuter models (LH184R-JRMNS and -ZRMNS) for Thailand has been discontinued.

MODEL CODE

RZH103 R – R B M R E Q

1 2 3 4 5 6 7 8

1

BASIC MODEL CODE			
CODE	DRIVE TYPE	ENGINE	WHEEL BASE
RZH102	2WD	1RZ	Standard
RZH103		2RZ-E	
RZH104		1RZ	
RZH105		2RZ-E	
RZH112		1RZ	Long
RZH113		2RZ-E	
RZH114		1RZ	
RZH115		2RZ-E	
RZH125			Super Long
RZH135			
RZH153			Long
RZH155			
LH102		2L	Standard
LH104			
LH112			Long
LH114			
LH154		5L	
LH162			Standard
LH164			
LH166	4WD		
LH172	2WD	5L or 5L-E	Long
LH174		5L	
LH176	4WD		
LH184	2WD		Super Long

2

STEERING WHEEL POSITION
L : Left-Hand Drive
R : Right-Hand Drive

3

BODY TYPE
B : 4-Door Commuter, Standard Roof
E : 4-Door Van, Standard Roof
J : 4-Door Commuter, Semi Middle Roof
R : 4-Door Van, High Roof
S : 5-Door Van
Z : 4-Door Commuter, High Roof

4

SEATING CAPACITY AND REAR SIDE WINDOW
B : 3, Panel
F : 7-15, Glass
G : 9, 10, Glass
R : 3-6, Glass (Van)
: 14, 15, Glass (Commuter)
H : 2-8, Glass

5

GEAR SHIFT TYPE
M : 5-Speed Manual, Floor
P : 4-Speed Automatic, Floor

6

GRADE
R : Standard
D : DX
G : GL
N : GL
Q : GL

7

ENGINE SPECIFICATION
E : EFI
S : Carburetor or Diesel

8

DESTINATION
Q : Australia
V : G.C.C. (Gulf Cooperation Council) Countries
X : Russia
Blank : General Countries

MODEL LINE-UP

Australia, G.C.C. Countries, Russia

DES-TINA-TION	DRIVE TYPE	EN-GINE	WHEEL BASE	BODY TYPE	SEATING CAPACITY AND REAR SIDE WINDOW	GRADE	TRANSMISSION			
							5-Speed Manual			4-Speed Automatic
							G52	G55	G56	A45DL
Australia	2WD	2RZ-E	Standard	4-Door Van	3, Panel	Standard	—	RZH103R-RBMREQ	—	—
							—	—	—	RZH103R-RBPREQ
			Long				—	RZH113R-RBMREQ	—	—
							—	—	—	RZH113R-RBPREQ
			Super Long	4-Door Commuter	3 or 13, Glass		—	RZH125R-ZRMREQ	—	—
							—	—	—	RZH125R-ZRPREQ
		5L	Standard	4-Door Van	3, Panel		—	LH162R-RBMRSQ	—	—
			Long				—	LH172R-RBMRSQ	—	—
			Super Long	4-Door Commuter	3 or 13, Glass		—	LH184R-ZRMRSQ	—	LH184R-ZRPRSQ
G. C. C. Countries	2WD	2RZ	Long	4-Door Van	3, Panel	Standard	—	RZH113L-RBMRSV	—	—
				5-Door Van			—	RZH113L-SBMRSV	—	—
					3 or 6, Glass		—	RZH113L-SRMRSV	—	—
				4-Door Commuter	2, 3, 11, 12, Glass		—	RZH115L-BRMRSV	—	—
		2RZ-E		4-Door Van	3, Panel		—	RZH113L-RBMREV	—	—
				5-Door Van			—	RZH113L-SBMREV	—	—
					3 or 6, Glass		—	RZH113L-SRMREV	—	—
				4-Door Commuter	2, 3, 11, 12, Glass		—	RZH115L-BRMREV	—	—
		5L		5-Door Van	3, Panel		—	LH172L-SBMRSV	—	—
				4-Door Commuter	2, 3, 11, 12, Glass		—	LH174L-BRMRSV	—	—
Russia	2WD	2RZ-E	Standard	4-Door Commuter	3 or 11, Glass		—	RZH105L-BFMREX	—	—
			Long		3 or 12, Glass		—	RZH115L-BRMREX	—	—
					11, Glass	GL	—	RZH155L-BFMGEX	—	—
		5L	Standard		3 or 11, Glass	Standard	—	LH164L-BFMRSX	—	—
			Long		3 or 12, Glass		—	LH174L-BRMRSX	—	—
	4WD		Standard		3 or 11, Glass		LH166L-BFMRSX	—	—	—
			Long		3 or 12, Glass		LH176L-BRMRSX	—	—	—

General Countries (1RZ, 2RZ-E)

DESTINATION	DRIVE TYPE	ENGINE	WHEEL BASE	BODY TYPE	SEATING CAPACITY AND REAR SIDE WINDOW	GRADE	TRANSMISSION			
							5-Speed Manual			4-Speed Automatic
							G52	G55	G56	A45DL
General Countries	2WD	1RZ	Standard	4-Door Van	10, Glass	GL	—	RZH102L-RGMGS	—	—
				4-Door Commuter	3 or 11, Glass	Standard	—	RZH104L-BFMRS	—	—
			Long	4-Door Van	3, Panel		—	RZH112$^{R}_{L}$-RBMRS	—	—
				5-Door Van	3 or 6, Glass		—	RZH112L-SRMRS	—	—
				4-Door Commuter	3 or 12, Glass		—	RZH114L-ZRMRS	—	—
					3, 12, 13, Glass		—	RZH114$^{R}_{L}$-BRMRS	—	—
		2RZ-E	Standard	5-Door Van	3, Panel		—	RZH103R-SBMRE	—	—
					3 or 6, Glass		—	RZH103R-SRMRE	—	—
				4-Door Commuter	3 or 11, Glass		—	RZH105R-BFMRE	—	—
						GL	—	RZH105L-BFMNE	—	—
			Long	4-Door Van	2, Panel		—	RZH153R-RBMNE	—	—
					3, Panel	Standard	—	RZH113$^{R}_{L}$-RBMRE	—	—
					3 or 6, Glass		—	RZH113R-RRMRE	—	—
					7, Glass	DX	—	RZH113R-RHMDE	—	—
				5-Door Van	3, Panel	Standard	—	RZH113R-SBMRE	—	—
					3 or 6, Glass		—	RZH113$^{R}_{L}$-SRMRE	—	—
				4-Door Commuter	11, Glass	GL	—	RZH115L-BFMGE	—	—
							—	RZH155L-BFMGE	—	—
					3 or 12, Glass	Standard	—	RZH115L-BRMRE	—	—
						GL	—	RZH115L-BRMNE	—	—
							—	RZH115L-ZRMNE	—	—
			Super Long		12, Glass		—	RZH135R-JFMGE	—	—

General Countries (2L, 5L, 5L-E)

DES-TINA-TION	DRIVE TYPE	EN-GINE	WHEEL BASE	BODY TYPE	SEATING CAPACITY AND REAR SIDE WINDOW	GRADE	TRANSMISSION			
							5-Speed Manual			4-Speed Automatic
							G52	G55	G56	A45DL
General Countries	2WD	2L	Standard	4-Door Van	3, Panel	Standard	—	LH102L-RBMRS	—	—
			Long				—	$LH112^{R}_{L}$-RBMRS	—	—
					3 or 6, Glass		—	LH112R-RRMRS	—	—
				4-Door Commuter	9 or 10, Glass		—	LH114L-BFMRS	—	—
					3 or 11, Glass		—	LH104L-BFMRS	—	—
					3 or 12, Glass		—	$LH114^{R}_{L}$-BRMRS	—	—
		5L	Standard	5-Door Van	3, Panel		—	LH162R-SBMRS	—	—
					3 or 6, Glass		—	LH162R-SRMRS	—	—
							—	—	—	LH162R-SRPRS
			Long	4-Door Van	3, Panel		—	$LH172^{R}_{L}$-RBMRS	—	—
							—	LH172R-EBMRS	—	—
						GL	—	LH172R-RBMNS	—	—
					3 or 6, Glass	Standard	—	LH172R-RRMRS	—	—
				5-Door Van	3, Panel		—	$LH172^{R}_{L}$-SBMRS	—	—
					3 or 6, Glass		—	LH172R-SRMRS	—	—
				4-Door Commuter	10, Glass	GL	—	LH154L-BFMQS	—	—
					11, Glass		—	LH154L-BFMGS	—	—
					3 or 12, Glass	Standard	—	$LH174^{R}_{L}$-BRMRS	—	—
							—	LH174R-ZRMRS	—	—
			Super Long		12, Glass	GL	—	LH184R-JRMNS	—	—
							—	LH184R-ZRMNS	—	—
		5L-E	Long	4-Door Van	3 or 6, Glass	Standard	—	—	LH172R-RRMRE	—
						GL	—	—	LH172R-RRMNE	—

NEW FEATURES

■ALL ENGINES

Cooling System

The TOYOTA genuine super long life coolant (SLLC) has been adopted. As result, the maintenance interval has been extended.

▶ Specifications ◀

Model					New	Previous
Engine Coolant	Capacity Liters (US qts, Imp.qts)	1RZ	Without Heater	M/T	8.0 (8.5, 7.0)	←
				A/T	7.7 (8.1, 6.8)	←
			With Front Heater	M/T	9.0 (9.5, 7.9)	←
				A/T	8.7 (9.2, 7.7)	←
			With Front and Rear Heater	M/T	10.0 (10.6, 8.8)	←
				A/T	9.7 (10.3, 8.5)	←
		2RZE	Without Heater	M/T	8.0 (8.5, 7.0)	←
				A/T	7.7 (8.1, 6.8)	←
			With Front Heater	M/T	9.0 (9.5, 7.9)	←
				A/T	8.7 (9.2, 7.7)	←
			With Front and Rear Heater	M/T	10.0 (10.6, 8.8)	←
				A/T	9.7 (10.3, 8.5)	←
		2L	—		9.2 (9.7, 8.1)	←
		5L	Without Heater		8.5 (9.0, 7.5)	←
			With Front Heater		9.5 (10.0, 8.4)	←
			With Front and Rear Heater		11.0 (11.6, 9.7)	←
		5L-E	—		9.3 (9.8, 8.1)	←
	Type				TOYOTA Genuine SLLC	TOYOTA Genuine LLC
	Maintenance Intervals		First time		160,000 km (100,000 mile)	Every 40,000 km (25,000 mile) or 24 months whichever comes first
			Subsequent		Every 80,000 km (50,000 mile)	
	Color				Pink	Red
Thermostat	Operating Temperatur °C (°F)				80 – 84 (176 – 183)	←

- SLLC is pre-mixed (50% coolant and 50% distilled water), so no dilution is needed when adding or replacing SLLC in the vehicle.
- If LLC is mixed with SLLC, the interval for LLC (every 40,000 km/25,000 miles or 24 months) should be used.
- You can also apply the new maintenance interval (every 80,000 km/50,000 mile) to vehicles initially filled with LLC (red-colored) if you use SLLC (pink-colored) for the coolant change.

■2RZ-E ENGINE

Exhaust System

- A ceramic type TWC has been adopted.
- One oxygen sensor has been newly provided in front of the TWC in order to improve the exhaust reduction performance of the TWC through feedback control to the engine ECU.

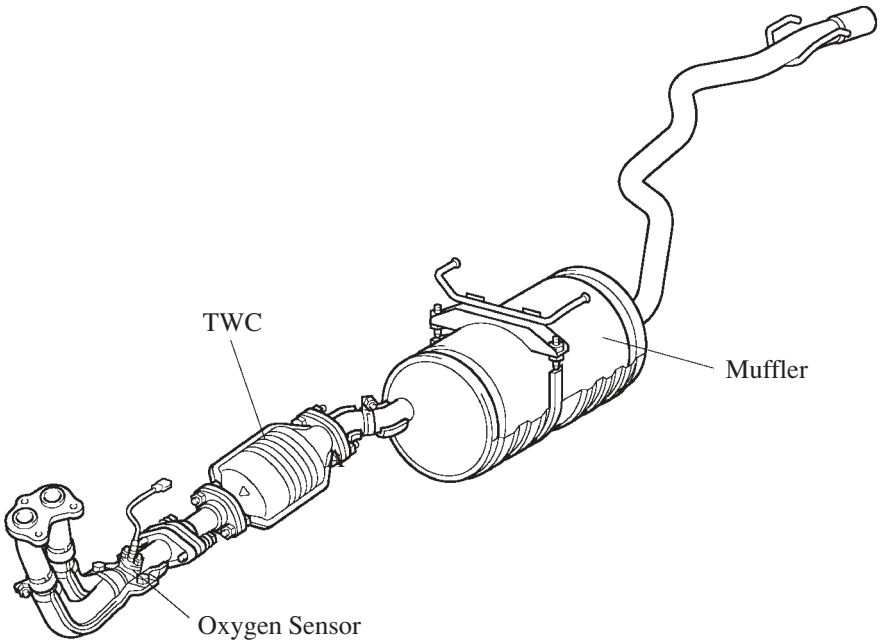

– MEMO –

MAJOR TECHNICAL SPECIFICATIONS

Item \ Area				Australia			
Body Type				4-Door Van (Standard)		4-Door Van (Long)	
Vehicle Grade				Standard			
Model Code				RZH103R-RBMREQ	RZH103R-RBPREQ	RZH113R-RBMREQ	RZH113R-RBPREQ
Major Dimensions & Vehicle Weights	Overall	Length	mm (in.)	4640 (182.7), 4595 (180.9)*1	4640 (182.7), 4595 (180.9)*1	4900 (192.9), 4855 (191.1)*1	4900 (192.9), 4855 (191.1)*1
		Width	mm (in.)	1690 (66.5)	1690 (66.5)	1690 (66.5)	1690 (66.5)
		Height	mm (in.)	1945 (76.6)	1945 (76.6)	1945 (76.6)	1945 (76.6)
	Wheel Base		mm (in.)	2330 (91.7)	2330 (91.7)	2590 (102.0)	2590 (102.0)
	Tread	Front	mm (in.)	1450 (57.1), 1465 (57.7)*2	1450 (57.1), 1465 (57.7)*2	1450 (57.1), 1465 (57.7)*2	1450 (57.1), 1465 (57.7)*2
		Rear	mm (in.)	1430 (56.3), 1445 (56.9)*2	1430 (56.3), 1445 (56.9)*2	1430 (56.3), 1445 (56.9)*2	1430 (56.3), 1445 (56.9)*2
	Room	Length	mm (in.)	980 (38.6)	980 (38.6)	980 (38.6)	980 (38.6)
		Width	mm (in.)	1480 (58.3)	1480 (58.3)	1480 (58.3)	1480 (58.3)
		Height	mm (in.)	1345 (53.0)	1345 (53.0)	1345 (53.0)	1345 (53.0)
	Cargo Space	Length	mm (in.)	2715 (106.9)	2715 (106.9)	2975 (117.1)	2975 (117.1)
		Width	mm (in.)	1540 (60.6)	1540 (60.6)	1540 (60.6)	1540 (60.6)
		Height	mm (in.)	1345 (53.0)	1345 (53.0)	1345 (53.0)	1345 (53.0)
	Overhang	Front	mm (in.)	1155 (45.5)	1155 (45.5)	1155 (45.5)	1155 (45.5)
		Rear	mm (in.)	1155 (45.5), 1110 (43.7)*1	1155 (45.5), 1110 (43.7)*1	1155 (45.5), 1110 (43.7)*1	1155 (45.5), 1110 (43.7)*1
	Min. Running Ground Clearance		mm (in.)	180 (7.1)	180 (7.1)	180 (7.1)	180 (7.1)
	Angle of Approach		degrees	19°	19°	19°	19°
	Angle of Departure		degrees	18°	18°	18°	18°
	Curb Weight	Front	kg (lb)	810 - 870 (1786 - 1918)	815 - 875 (1797 - 1929)	825 - 890 (1819 - 1962)	830 - 895 (1830 - 1973)
		Rear	kg (lb)	655 - 685 (1444 - 1510)	660 - 690 (1455 - 1521)	670 - 700 (1477 - 1543)	675 - 705 (1488 - 1554)
		Total	kg (lb)	1465 - 1555 (3230 - 3428)	1475 - 1565 (3252 - 3540)	1495 - 1590 (3296 - 3505)	1505 - 1600 (3318 - 3527)
	Gross Vehicle Weight	Front	kg (lb)	1165 - 1215 (2568 - 2679)	1170 - 1215 (2579 - 2679)	1215 - 1265 (2679 - 2789)	1220 - 1270 (2690 - 2800)
		Rear	kg (lb)	1585 - 1635 (3494 - 3605)	1585 - 1630 (3494 - 3594)	1535 - 1585 (3384 - 3494)	1530 - 1580 (3373 - 3483)
		Total	kg (lb)	2800 (6173)	2800 (6173)	2800 (6173)	2800 (6173)
	Fuel Tank Capacity		ℓ(Imp.gal.)	70 (15.4)	70 (15.4)	70 (15.4)	70 (15.4)
	Luggage Compartment Capacity		m^3 (cu.ft.)	—	—	—	—
Performance	Max. Speed		km / h (mph)	150 (93)	145 (90)	150 (93)	145 (90)
	Max. Cruising Speed		km / h (mph)	120 (74)	115 (71)	120 (74)	115 (71)
	Max. Permissible Speed	1st Gear	km / h (mph)	33 (20)	51 (31)	33 (20)	51 (31)
		2nd Gear	km / h (mph)	57 (35)	99 (61)	57 (35)	99 (61)
		3rd Gear	km / h (mph)	99 (61)	—	99 (61)	—
		4th Gear	km / h (mph)	—	—	—	—
	Min. Turning Radius	Tire	m (ft.)	4.7 (15.4)	4.7 (15.4)	5.2 (17.1)	5.2 (17.1)
		Body	m (ft.)	5.3 (17.4)	5.3 (17.4)	5.8 (19.0)	5.8 (19.0)
Engine	Engine Type			2RZ-E	2RZ-E	2RZ-E	2RZ-E
	Valve Mechanism			OHC, Chain Drive	OHC, Chain Drive	OHC, Chain Drive	OHC, Chain Drive
	Bore x Stroke		mm (in.)	95 x 86 (3.74 x 3.39)	95 x 86 (3.74 x 3.39)	95 x 86 (3.74 x 3.39)	95 x 86 (3.74 x 3.39)
	Displacement		cm^3 (cu.in.)	2438 (148.8)	2438 (148.8)	2438 (148.8)	2438 (148.8)
	Compression Ratio			8.8 : 1	8.8 : 1	8.8 : 1	8.8 : 1
	Carburetor Type or Injection Pump Type (Diesel)			EFI	EFI	EFI	EFI
	Research Octane No. or Cetane No. (Diesel)			90 or more higher	90 or more higher	90 or more higher	90 or more higher
	Max. Output (EEC)		kW / rpm	88 / 4800	88 / 4800	88 / 4800	88 / 4800
	Max. Torque (EEC)		N·m / rpm	200 / 2600	200 / 2600	200 / 2600	200 / 2600
Engine Electrical	Battery Capacity (5HR)		Voltage & Amp. hr.	12-40	12-40	12-40	12-40
	Alternator Output		Watts	840	840	840	840
	Starter Output		kW	1.0	1.0	1.0	1.0
Chassis	Clutch Type			Dry, Single Plate, Diaphragm	—	Dry, Single Plate, Diaphragm	—
	Transmission Type			G55	A45DL	G55	A45DL
	Transmission Gear Ratio	In First		4.452	2.826	4.452	2.826
		In Second		2.619	1.493	2.619	1.493
		In Third		1.517	1.000	1.517	1.000
		In Fourth		1.000	0.730	1.000	0.730
		In Fifth		0.854	—	0.854	—
		In Reverse		4.472	2.730	4.472	2.730
	Transfer Gear Ratio H4 / L4			—	—	—	—
	Differential Gear Ratio (Front / Rear)			— / 4.100	— / 4.555	— / 4.100	— / 4.555
	Differential Gear Size (Front / Rear)		in.	— / 8.07	— / 8.07	— / 8.07	— / 8.07
	Brake Type	Front		Ventilated Disc	Ventilated Disc	Ventilated Disc	Ventilated Disc
		Rear		Leading-Trailing Drum	Leading-Trailing Drum	Leading-Trailing Drum	Leading-Trailing Drum
	Parking Brake Type			Leading-Trailing Drum	Leading-Trailing Drum	Leading-Trailing Drum	Leading-Trailing Drum
	Brake Booster Type and Size		in.	Tandem 8.5" + 8.5", Tandem 8" + 9"*3	Tandem 8.5" + 8.5", Tandem 8" + 9"*3	Tandem 8.5" + 8.5", Tandem 8" + 9"*3	Tandem 8.5" + 8.5", Tandem 8" + 9"*3
	Proportioning Valve Type			LSP and BV	LSP and BV	LSP and BV	LSP and BV
	Suspension Type	Front		Double Wishbone	Double Wishbone	Double Wishbone	Double Wishbone
		Rear		Leaf Spring, Rigid	Leaf Spring, Rigid	Leaf Spring, Rigid	Leaf Spring, Rigid
	Stabilizer Bar	Front		Standard	Standard	Standard	Standard
		Rear		—	—	—	—
	Steering Gear Type			Rack and Pinion	Rack and Pinion	Rack and Pinion	Rack and Pinion
	Steering Gear Ratio (Overall)			25.82, 18.68*4	25.82, 18.68*4	25.82, 18.68*4	25.82, 18.68*4
	Power Steering Type			Integral Type	Integral Type	Integral Type	Integral Type

*1: With Step Bumper
*2: With P195 / 70 R15 Tire
*3: With ABS
*4: With Power Steering

Australia					
4-Door Commuter		4-Door Van (Standard)	4-Door Van (Long)	4-Door Commuter	
Standard					
RZH125R-ZRMREQ	RZH125R-ZRPREQ	LH162R-RBMRSQ	LH172R-RBMRSQ	LH184R-ZRMRSQ	LH184R-ZRPRSQ
5200 (204.7)	5200 (204.7)	4640 (182.7), 4595 (180.9)*1	4900 (192.9), 4855 (191.1)*1	5200 (204.7)	5200 (204.7)
1690 (66.5)	1690 (66.5)	1690 (66.5)	1690 (66.5)	1690 (66.5)	1690 (66.5)
2225 (87.6)	2225 (87.6)	1945 (76.6)	1945 (76.6)	2225 (87.6)	2225 (87.6)
2890 (113.8)	2890 (113.8)	2330 (91.7)	2590 (102.0)	2890 (113.8)	2890 (113.8)
1450 (57.1), 1465 (57.7)*2	1450 (57.1), 1465 (57.7)*2	1450 (57.1), 1465 (57.7)*2	1450 (57.1), 1465 (57.7)*2	1450 (57.1), 1465 (57.7)*2	1450 (57.1), 1465 (57.7)*2
1430 (56.3), 1445 (56.9)*2	1430 (56.3), 1445 (56.9)*2	1430 (56.3), 1445 (56.9)*2	1430 (56.3), 1445 (56.9)*2	1430 (56.3), 1445 (56.9)*2	1430 (56.3), 1445 (56.9)*2
4120 (162.2)	4120 (162.2)	980 (38.6)	980 (38.6)	4120 (162.2)	4120 (162.2)
1540 (60.6)	1540 (60.6)	1540 (60.6)	1480 (58.3)	1540 (60.6)	1540 (60.6)
1605 (63.2)	1605 (63.2)	1345 (53.0)	1345 (53.0)	1605 (63.2)	1605 (63.2)
—	—	2715 (106.9)	2975 (117.1)	—	—
—	—	1540 (60.6)	1540 (60.6)	—	—
—	—	1345 (53.0)	1345 (53.0)	—	—
1155 (45.5)	1155 (45.5)	1155 (45.5)	1155 (45.5)	1155 (45.5)	1155 (45.5)
1155 (45.5)	1155 (45.5)	1155 (45.5), 1110 (43.7)*1	1155 (45.5), 1110 (43.7)*1	1155 (45.5)	1155 (45.5)
180 (7.1)	180 (7.1)	180 (7.1)	180 (7.1)	180 (7.1)	180 (7.1)
19°	19°	19°	19°	19°	19°
18°	18°	18°	18°	18°	18°
900 - 985 (1984 - 2172)	905 - 990 (1995 - 2183)	865 - 930 (1907 - 2050)	880 - 945 (1940 - 2083)	995 - 1045 (2194 - 2304)	950 - 1050 (2094 - 2315)
805 - 820 (1775 - 1808)	810 - 825 (1786 - 1819)	665 - 695 (1466 - 1532)	680 - 710 (1499 - 1565)	815 - 830 (1797 - 1830)	820 - 835 (1808 - 1841)
1705 - 1805 (3759 - 3979)	1715 - 1815 (3781 - 4001)	1530 - 1625 (3373 - 3583)	1560 - 1655 (3439 - 3649)	1770 - 1875 (3902 - 4134)	1780 - 1885 (3924 - 4156)
1175 - 1290 (2590 - 2844)	1185 - 1300 (2612 - 2866)	1210 - 1260 (2668 - 2778)	1260 - 1310 (2778 - 2888)	1235 - 1355 (2723 - 2987)	1245 - 1365 (2745 - 3009)
1510 - 1625 (3329 - 3583)	1500 - 1615 (3560 - 3307)	1540 - 1590 (3395 - 3505)	1490 - 1540 (3285 - 3439)	1615 - 1495 (3560 - 3296)	1485 - 1605 (3274 - 3538)
2800 (6173)	2800 (6173)	2800 (6173)	2800 (6173)	2800 (6173)	2850 (6283)
70 (15.4)	70 (15.4)	70 (15.4)	70 (15.4)	70 (15.4)	70 (15.4)
—	—	—	—	—	—
150 (93)	145 (90)	140 (87)	140 (87)	140 (87)	130 (81)
120 (74)	115 (71)	—	—	—	—
33 (20)	47 (29)	30 (19)	30 (19)	30 (19)	33 (20)
57 (35)	86 (53)	51 (32)	51 (32)	51 (32)	63 (39)
99 (61)	—	87 (54)	87 (54)	87 (54)	—
—	—	—	—	—	—
5.7 (18.7)	5.7 (18.7)	4.7 (15.4)	5.2 (17.1)	5.7 (18.7)	5.7 (18.7)
6.3 (20.7)	6.3 (20.7)	5.3 (17.4)	5.8 (19.0)	6.3 (20.7)	6.3 (20.7)
2RZ-E	2RZ-E	5L	5L	5L	5L
OHC, Chain Drive	OHC, Chain Drive	OHC, Belt Drive	OHC, Belt Drive	OHC, Belt Drive	OHC, Belt Drive
95 x 86 (3.74 x 3.39)	95 x 86 (3.74 x 3.39)	99.5 x 96 (3.91 x 3.78)	99.5 x 96 (3.91 x 3.78)	99.5 x 96 (3.91 x 3.78)	99.5 x 96 (3.91 x 3.78)
2438 (148.8)	2438 (148.8)	2986 (117.6)	2986 (117.6)	2986 (117.6)	2986 (117.6)
8.8 : 1	8.8 : 1	22.2 : 1	22.2 : 1	22.2 : 1	22.2 : 1
EFI	EFI	Distributor Type	Distributor Type	Distributor Type	Distributor Type
90 or more higher	90 or more higher	48 or more higher	48 or more higher	48 or more higher	48 or more higher
88 / 4800	88 / 4800	66 / 4800	66 / 4000	66 / 4000	66 / 4000
200 / 2600	200 / 2600	192 / 2400	192 / 2400	192 / 2400	192 / 2400
12-40	12-40	12-64	12-64	12-40	12-64
840	840	960	960	960	960
1.0	1.0	2.2	2.2	2.2	2.7
Dry, Single Plate, Diaphragm	—	Dry, Single Plate, Diaphragm	Dry, Single Plate, Diaphragm	Dry, Single Plate, Diaphragm	—
G55	A45DL	G55	G55	G55	A45DL
4.452	2.826	4.452	4.452	4.452	2.826
2.619	1.493	2.619	2.619	2.619	1.493
1.517	1.000	1.517	1.517	1.517	1.000
1.000	0.730	1.000	1.000	1.000	0.730
0.854	—	0.854	0.854	0.854	—
4.472	2.730	4.472	4.472	4.472	2.730
—	—	—	—	—	—
—/4.100	—/4.555	—/4.100	—/4.100	—/4.100	—/4.875
—/8.07	—/8.07	—/8.07	—/8.07	—/8.07	—/8.07
Ventilated Disc	Ventilated Disc	Ventilated Disc	Ventilated Disc	Ventilated Disc	Ventilated Disc
Leading-Trailing Drum	Leading-Trailing Drum	Leading-Trailing Drum	Leading-Trailing Drum	Leading-Trailing Drum	Leading-Trailing Drum
Leading-Trailing Drum	Leading-Trailing Drum	Leading-Trailing Drum	Leading-Trailing Drum	Leading-Trailing Drum	Leading-Trailing Drum
Tandem 8.5" + 8.5", Tandem 8" + 9"*3	Tandem 8.5" + 8.5", Tandem 8" + 9"*3	Single 10", Tandem 8" + 9"*3	Single 10", Tandem 8" + 9"*3	Single 10", Tandem 8" + 9"*3	Single 10", Tandem 8" + 9"*3
LSP and BV	LSP and BV	LSP and BV	LSP and BV	LSP and BV	LSP and BV
Double Wishbone	Double Wishbone	Double Wishbone	Double Wishbone	Double Wishbone	Double Wishbone
Leaf Spring, Rigid	Leaf Spring, Rigid	Leaf Spring, Rigid	Leaf Spring, Rigid	Leaf Spring, Rigid	Leaf Spring, Rigid
Standard	Standard	Standard	Standard	Standard	Standard
—	—	—	—	—	—
Rack and Pinion	Rack and Pinion	Rack and Pinion	Rack and Pinion	Rack and Pinion	Rack and Pinion
25.82, 18.68*4	25.82, 18.68*4	25.82, 18.68*4	25.82, 18.68*4	25.82, 18.68*4	18.68
Integral Type	Integral Type	Integral Type	Integral Type	Integral Type	Integral Type

Item \ Area				G.C.C. Countries			
Body Type				4-Door Van (Long)	5-Door Van (Long)		4-Door Commuter
Vehicle Grade				Standard			
Model Code				RZH113L-RBMRSV	RZH113L-SBMRSV	RZH113L-SRMRSV	RZH115L-BRMRSV
Major Dimensions & Vehicle Weights	Overall	Length	mm (in.)	4900 (192.9), 4855 (191.1)*1	4900 (192.9), 4855 (191.1)*1	4900 (192.9), 4855 (191.1)*1	4900 (192.9)
		Width	mm (in.)	1690 (66.5), 1745 (68.7)*2	1690 (66.5), 1745 (68.7)*2	1690 (66.5), 1745 (68.7)*2	1690 (66.5), 1745 (68.7)*2
		Height	mm (in.)	1945 (76.6)	1945 (76.6)	1945 (76.6)	1935 (76.2)
	Wheel Base		mm (in.)	2590 (102.0)	2590 (102.0)	2590 (102.0)	2590 (102.0)
	Tread	Front	mm (in.)	1450 (57.1), 1465 (57.7)*3	1450 (57.1), 1465 (57.7)*3	1450 (57.1), 1465 (57.7)*3	1450 (57.1), 1465 (57.7)*3
		Rear	mm (in.)	1430 (56.3), 1445 (56.9)*3	1430 (56.3), 1445 (56.9)*3	1430 (56.3), 1445 (56.9)*3	1430 (56.3), 1445 (56.9)*3
	Room	Length	mm (in.)	980 (38.6)	980 (38.6)	1990 (78.3)	3865 (152.2)
		Width	mm (in.)	1480 (58.3)	1480 (58.3)	1540 (60.6)	1540 (60.6)
		Height	mm (in.)	1345 (53.0)	1345 (53.0)	1345 (53.0)	1335 (52.6)
	Cargo Space	Length	mm (in.)	2975 (117.1)	297.5 (117.1)	1965 (77.4)	—
		Width	mm (in.)	1540 (60.6)	1540 (60.6)	1540 (60.6)	—
		Height	mm (in.)	1345 (53.0)	1345 (53.0)	1345 (53.0)	—
	Overhang	Front	mm (in.)	1155 (45.5)	1155 (45.5)	1155 (45.5)	1155 (45.5)
		Rear	mm (in.)	1155 (45.5), 1110 (43.7)*1	1155 (45.5), 1110 (43.7)*1	1155 (45.5), 1110 (43.7)*1	1155 (45.5)
	Min. Running Ground Clearance		mm (in.)	180 (7.1)	180 (7.1)	180 (7.1)	180 (7.1)
	Angle of Approach		degrees	19°	19°	19°	19°
	Angle of Departure		degrees	18°	18°	18°	18°
	Curb Weight	Front	kg (lb)	870 - 900 (1918 - 1984)	875 - 910 (1929 - 2006)	895 - 925 (1973 - 2039)	915 - 945 (2017 - 2083)
		Rear	kg (lb)	660 - 685 (1455 - 1510)	670 - 700 (1477 - 1543)	705 - 720 (1554 - 1587)	765 - 780 (1687 - 1720)
		Total	kg (lb)	1530 - 1585 (3373 - 3494)	1545 - 1610 (3496 - 3549)	1600 - 1645 (3527 - 3627)	1680 - 1725 (3704 - 3803)
	Gross Vehicle Weight	Front	kg (lb)	1270 - 1290 (2800 - 2844)	1270 - 1295 (2800 - 2855)	1230 - 1260 (2712 - 2778)	1240 - 1285 (2734 - 2833)
		Rear	kg (lb)	1510 - 1530 (3329 - 3373)	1505 - 1530 (3318 - 3373)	1540 - 1570 (3395 - 3461)	1605 - 1650 (3538 - 3638)
		Total	kg (lb)	2800 (6173)	2800 (6173)	2800 (6173)	2800 (6173)
	Fuel Tank Capacity		ℓ (Imp. gal.)	70 (15.4)	70 (15.4)	70 (15.4)	70 (15.4)
	Luggage Compartment Capacity		m^3 (cu.ft.)	—	—	—	—
Performance	Max. Speed		km/h (mph)	150 (93)	150 (93)	150 (93)	150 (93)
	Max. Cruising Speed		km/h (mph)	120 (74)	120 (74)	120 (74)	120 (74)
	Max. Permissible Speed	1st Gear	km/h (mph)	35 (22)	35 (22)	35 (22)	35 (22)
		2nd Gear	km/h (mph)	60 (37)	60 (37)	60 (37)	60 (37)
		3rd Gear	km/h (mph)	104 (64)	104 (64)	104 (64)	104 (64)
		4th Gear	km/h (mph)	—	—	—	—
	Min. Turning Radius	Tire	m (ft.)	5.2 (17.1)	5.2 (17.1)	5.2 (17.1)	5.2 (17.1)
		Body	m (ft.)	5.8 (19.0)	5.8 (19.0)	5.8 (19.0)	5.8 (19.0)
Engine	Engine Type			2RZ	2RZ	2RZ	2RZ
	Valve Mechanism			OHC, Chain Drive	OHC, Chain Drive	OHC, Chain Drive	OHC, Chain Drive
	Bore x Stroke		mm (in.)	95 x 86 (3.74 x 3.39)	95 x 86 (3.74 x 3.39)	95 x 86 (3.74 x 3.39)	95 x 86 (3.74 x 3.39)
	Displacement		cm^3 (cu.in.)	2438 (148.8)	2438 (148.8)	2438 (148.8)	2438 (148.8)
	Compression Ratio			8.8 : 1	8.8 : 1	8.8 : 1	8.8 : 1
	Carburetor Type or Injection Pump Type (Diesel)			Down Draft, 2 barrel	Down Draft, 2 barrel	Down Draft, 2 barrel	Down Draft, 2 barrel
	Research Octane No. or Cetane No. (Diesel)			90 or more higher	90 or more higher	90 or more higher	90 or more higher
	Max. Output (EEC)		kW/rpm	93/4800 (SAE-GROSS)	93/4800 (SAE-GROSS)	93/4800 (SAE-GROSS)	93/4800 (SAE-GROSS)
	Max. Torque (EEC)		N·m/rpm	202/2600 (SAE-GROSS)	202/2600 (SAE-GROSS)	202/2600 (SAE-GROSS)	198/2600 (SAE-GROSS)
Engine Electrical	Battery Capacity (5HR)		Voltage & Amp. hr.	12-40, 12-48*6	12-40, 12-48*6	12-40, 12-48*6	12-40, 12-48*6
	Alternator Output		Watts	840	840	840	840
	Starter Output		kW	1.0	1.0	1.0	1.0
Chassis	Clutch Type			Dry, Single Plate, Diaphragm	Dry, Single Plate, Diaphragm	Dry, Single Plate, Diaphragm	Dry, Single Plate, Diaphragm
	Transmission Type			G55	G55	G55	G55
	Transmission Gear Ratio	In First		4.452	4.452	4.452	4.452
		In Second		2.619	2.619	2.619	2.619
		In Third		1.517	1.517	1.517	1.517
		In Fourth		1.000	1.000	1.000	1.000
		In Fifth		0.854	0.854	0.854	0.854
		In Reverse		4.472	4.472	4.472	4.472
	Transfer Gear Ratio H4/L4			—	—	—	—
	Differential Gear Ratio (Front/Rear)			—/4.300	—/4.300	—/4.300	—/4.300
	Differential Gear Size (Front/Rear)		in.	—/8.07	—/8.07	—/8.07	—/8.07
	Brake Type	Front		Ventilated Disc	Ventilated Disc	Ventilated Disc	Ventilated Disc
		Rear		Leading-Trailing Drum	Leading-Trailing Drum	Leading-Trailing Drum	Leading-Trailing Drum
	Parking Brake Type			Leading-Trailing Drum	Leading-Trailing Drum	Leading-Trailing Drum	Leading-Trailing Drum
	Brake Booster Type and Size		in.	Tandem 8.5" + 8.5", Tandem 8" + 9"*4	Tandem 8.5" + 8.5", Tandem 8" + 9"*4	Tandem 8.5" + 8.5", Tandem 8" + 9"*4	Tandem 8.5" + 8.5", Tandem 8" + 9"*4
	Proportioning Valve Type			LSP and BV	LSP and BV	LSP and BV	LSP and BV
	Suspension Type	Front		Double Wishbone	Double Wishbone	Double Wishbone	Double Wishbone
		Rear		Leaf Spring, Rigid	Leaf Spring, Rigid	Leaf Spring, Rigid	Leaf Spring, Rigid
	Stabilizer Bar	Front		Standard	Standard	Standard	Standard
		Rear		—	—	—	—
	Steering Gear Type			Rack and Pinion	Rack and Pinion	Rack and Pinion	Rack and Pinion
	Steering Gear Ratio (Overall)			—	25.82, 18.68*5	25.82, 18.68*5	25.82, 18.68*5
	Power Steering Type			Integral Type	Integral Type	Integral Type	Integral Type

*1: With Step Bumper
*2: With Snorkel Cleaner Air Duct
*3: With P195/70 R15 Tire
*4: With ABS
*5: Option

G.C.C. Countries					
4-Door Van (Long)	5-Door Van (Long)		4-Door Commuter	5-Door Van (Long)	4-Door Commuter
Standard					
RZH113L-RBMREV	RZH113L-SBMREV	RZH113L-SRMREV	RZH115L-BRMREV	LH172L-SBMRSV	LH174L-BRMRSV
4900 (192.9), 4855 (191.1)*1	4900 (192.9), 4855 (191.1)*1	4900 (192.9), 4855 (191.1)*1	4900 (192.9)	4900 (192.9), 4855 (191.1)*1	4900 (192.9)
1690 (66.5), 1745 (68.7)*2	1690 (66.5), 1745 (68.7)*2	1690 (66.5), 1745 (68.7)*2	1690 (66.5), 1745 (68.7)*2	1690 (66.5)	1690 (66.5)
1945 (76.6)	1945 (76.6)	1945 (76.6)	1935 (76.2)	1945 (76.6)	1935 (76.2)
2590 (102.0)	2590 (102.0)	2590 (102.0)	2590 (102.0)	2590 (102.0)	2590 (102.0)
1450 (57.1), 1465 (57.7)*3	1450 (57.1), 1465 (57.7)*3	1450 (57.1), 1465 (57.7)*3	1450 (57.1), 1465 (57.7)*3	1450 (57.1), 1465 (57.7)*3	1450 (57.1), 1465 (57.7)*3
1430 (56.3), 1445 (56.9)*3	1430 (56.3), 1445 (56.9)*3	1430 (56.3), 1445 (56.9)*3	1430 (56.3), 1445 (56.9)*3	1430 (56.3), 1445 (56.9)*3	1430 (56.3), 1445 (56.9)*3
980 (38.6)	1990 (78.3)	1990 (78.3)	3865 (152.2)	980 (38.6)	3865 (152.2)
1480 (58.3)	1540 (60.6)	1540 (60.6)	1540 (60.6)	1480 (58.3)	1540 (60.6)
1345 (53.0)	1345 (53.0)	1345 (53.0)	1335 (52.6)	1345 (53.0)	1335 (52.6)
2975 (117.1)	1965 (77.4)	1965 (77.4)	—	297.5 (117.7)	—
1540 (60.6)	1540 (60.6)	1540 (60.6)	—	1540 (60.6)	—
1345 (53.0)	1345 (53.0)	1345 (53.0)	—	1345 (53.0)	—
1155 (45.5)	1155 (45.5)	1155 (45.5)	1155 (45.5)	1155 (45.5)	1155 (45.5)
1155 (45.5), 1110 (43.7)*1	1155 (45.5), 1110 (43.7)*1	1155 (45.5), 1110 (43.7)*1	1155 (45.5)	1155 (45.5), 1110 (43.7)*1	1155 (45.5)
180 (7.1)	180 (7.1)	180 (7.1)	180 (7.1)	180 (7.1)	180 (7.1)
19°	19°	19°	19°	19°	19°
18°	18°	18°	18°	18°	18°
875 - 905 (1929 - 1995)	880 - 915 (1940 - 2017)	900 - 930 (1984 - 2050)	920 - 950 (2028 - 2094)	930 - 965 (2050 - 2127)	990 - 1020 (2183 - 2249)
660 - 685 (1455 - 1510)	670 - 700 (1477 - 1543)	705 - 720 (1554 - 1587)	765 - 780 (1687 - 1720)	690 - 720 (1521 - 1143)	785 - 800 (1731 - 1764)
1535 - 1590 (3384 - 3505)	1550 - 1615 (3417 - 3560)	1605 - 1650 (3538 - 3638)	1685 - 1730 (3715 - 3814)	1620 - 1685 (3571 - 3714)	1775 - 1820 (3913 - 4012)
1275 - 1295 (2811 - 2855)	1275 - 1300 (2811 - 2866)	1235 - 1275 (2723 - 2811)	1245 - 1290 (2745 - 2844)	1315 - 1335 (2899 - 2943)	1315 - 1360 (2899 - 2998)
1505 - 1525 (3318 - 3362)	1500 - 1525 (3307 - 3362)	1535 - 1565 (3384 - 3450)	1600 - 1645 (3527 - 3627)	1465 - 1485 (3230 - 3274)	1620 - 1665 (3571 - 3671)
2800 (6173)	2800 (6173)	2800 (6173)	2890 (6371)	2800 (6173)	2890 (6371)
70 (15.4)	70 (15.4)	70 (15.4)	70 (15.4)	70 (15.4)	70 (15.4)
—	—	—	—	—	—
150 (93)	150 (93)	150 (93)	150 (93)	140 (87)	140 (87)
120 (74)	120 (74)	120 (74)	120 (74)	—	—
35 (22)	35 (22)	35 (22)	35 (22)	30 (19)	30 (19)
60 (37)	60 (37)	60 (37)	60 (37)	51 (32)	51 (32)
104 (64)	104 (64)	104 (64)	104 (64)	87 (54)	87 (54)
—	—	—	—	—	—
5.2 (17.1)	5.2 (17.1)	5.2 (17.1)	5.2 (17.1)	5.2 (17.1)	5.2 (17.1)
5.8 (19.0)	5.8 (19.0)	5.8 (19.0)	5.8 (19.0)	5.8 (19.0)	5.8 (19.0)
2RZ-E	2RZ-E	2RZ-E	2RZ-E	5L	5L
OHC, Chain Drive	OHC, Chain Drive	OHC, Chain Drive	OHC, Chain Drive	OHC, Belt Drive	OHC, Belt Drive
95 x 86 (3.74 x 3.39)	95 x 86 (3.74 x 3.39)	95 x 86 (3.74 x 3.39)	95 x 86 (3.74 x 3.39)	99.5 x 96 (3.91 x 3.78)	99.5 x 96 (3.91 x 3.78)
2438 (148.8)	2438 (148.8)	2438 (148.8)	2438 (148.8)	2986 (117.6)	2986 (117.6)
8.8 : 1	8.8 : 1	8.8 : 1	8.8 : 1	22.2 : 1	22.2 : 1
EFI	EFI	EFI	EFI	Distributor Type	Distributor Type
90 or more higher	90 or more higher	90 or more higher	90 or more higher	48 or more higher	48 or more higher
93 / 4800 (SAE-GROSS)	93 / 4800 (SAE-GROSS)	93 / 4800 (SAE-GROSS)	93 / 4800 (SAE-GROSS)	66 / 4000 (SAE-GROSS)	66 / 4000 (SAE-GROSS)
202 / 2600 (SAE-GROSS)	202 / 2600 (SAE-GROSS)	202 / 2600 (SAE-GROSS)	198 / 2600 (SAE-GROSS)	192 / 2400 (SAE-GROSS)	192 / 2400 (SAE-GROSS)
12-40, 12-48*6	12-40, 12-48*6	12-40, 12-48*6	12-40, 12-48*6	12-64, 12-55 x 2*6	12-64, 12-55 x 2*6
840	840	840	840	960	960
1.0	1.0	1.0	1.0	2.2	2.2
Dry, Single Plate, Diaphragm	Dry, Single Plate, Diaphragm	Dry, Single Plate, Diaphragm	Dry, Single Plate, Diaphragm	Dry, Single Plate, Diaphragm	Dry, Single Plate, Diaphragm
G55	G55	G55	G55	G55	G55
4.452	4.452	4.452	4.452	4.452	4.452
2.619	2.619	2.619	2.619	2.619	2.619
1.517	1.517	1.517	1.517	1.517	1.517
1.000	1.000	1.000	1.000	1.000	1.000
0.854	0.854	0.854	0.854	0.854	0.854
4.472	4.472	4.472	4.472	4.472	4.472
—	—	—	—	—	—
—/4.300	—/4.300	—/4.300	—/4.300	—/4.100	—/4.100
—/8.07	—/8.07	—/8.07	—/8.07	—/8.07	—/8.07
Ventilated Disc	Ventilated Disc	Ventilated Disc	Ventilated Disc	Ventilated Disc	Ventilated Disc
Leading-Trailing Drum	Leading-Trailing Drum	Leading-Trailing Drum	Leading-Trailing Drum	Leading-Trailing Drum	Leading-Trailing Drum
Leading-Trailing Drum	Leading-Trailing Drum	Leading-Trailing Drum	Leading-Trailing Drum	Leading-Trailing Drum	Leading-Trailing Drum
Tandem 8.5" + 8.5", Tandem 8" + 9"*4	Tandem 8.5" + 8.5", Tandem 8" + 9"*4	Tandem 8.5" + 8.5", Tandem 8" + 9"*4	Tandem 8.5" + 8.5", Tandem 8" + 9"*4	Single 10", Tandem 8" + 9"*4	Single 10", Tandem 8" + 9"*4
LSP and BV	LSP and BV	LSP and BV	LSP and BV	LSP and BV	LSP and BV
Double Wishbone	Double Wishbone	Double Wishbone	Double Wishbone	Double Wishbone	Double Wishbone
Leaf Spring, Rigid	Leaf Spring, Rigid	Leaf Spring, Rigid	Leaf Spring, Rigid	Leaf Spring, Rigid	Leaf Spring, Rigid
Standard	Standard	Standard	Standard	Standard	Standard
—	—	—	—	—	—
Rack and Pinion	Rack and Pinion	Rack and Pinion	Rack and Pinion	Rack and Pinion	Rack and Pinion
25.82, 18.68*5	—	25.82, 18.68*5	25.82, 18.68*5	25.82, 18.68*5	25.82, 18.68*5
Integral Type	Integral Type	Integral Type	Integral Type	Integral Type	Integral Type

Item \ Area				Russia			
Body Type				4-Door Commuter			
Vehicle Grade				Standard		GL	Standard
Model Code				RZH105L-BFMREX	RZH115L-BRMREX	RZH155L-BFMGEX	LH164L-BFMRSX
Major Dimensions & Vehicle Weights	Overall	Length	mm (in.)	4640 (182.7)	4900 (192.9)	4950 (194.9)	4640 (182.7)
		Width	mm (in.)	1690 (66.5)	1690 (66.5)	1690 (66.5)	1690 (66.5)
		Height	mm (in.)	1935 (76.2)	1935 (76.2)	1935 (76.2)	1935 (76.2)
	Wheel Base		mm (in.)	2330 (91.7)	2590 (102.0)	2590 (102.0)	2300 (91.7)
	Tread	Front	mm (in.)	1450 (57.1), 1465 (57.7)*3	1450 (57.1), 1465 (57.7)*3	1450 (57.1), 1465 (57.7)*2	1450 (57.1), 1465 (57.7)*3
		Rear	mm (in.)	1430 (56.3), 1445 (56.9)*3	1430 (56.3), 1445 (56.9)*3	1430 (56.3), 1445 (56.9)*2	1430 (56.3), 1445 (56.9)*3
	Room	Length	mm (in.)	3485 (137.2)	3865 (152.2)	3865 (152.2)	3485 (137.2)
		Width	mm (in.)	1540 (60.6)	1540 (60.6)	1540 (60.6)	1540 (60.6)
		Height	mm (in.)	1335 (52.6)	1335 (52.6)	1335 (52.6)	1335 (52.6)
	Cargo Space	Length	mm (in.)	—	—	—	—
		Width	mm (in.)	—	—	—	—
		Height	mm (in.)	—	—	—	—
	Overhang	Front	mm (in.)	1155 (45.5)	1155 (45.5)	1205 (47.4)	1155 (45.5)
		Rear	mm (in.)	1155 (45.5)	1155 (45.5)	1155 (45.5)	1155 (45.5)
	Min. Running Ground Clearance		mm (in.)	180 (7.1)	180 (7.1)	180 (7.1)	180 (7.1)
	Angle of Approach		degrees	19°	19°	18°	19°
	Angle of Departure		degrees	18°	18°	18°	18°
	Curb Weight	Front	kg (lb)	915 - 940 (2017 - 2072)	930 - 955 (2050 - 2105)	955 - 960 (2105 - 2116)	990 - 1015 (2183 - 2238)
		Rear	kg (lb)	740 - 750 (1631 - 1653)	780 - 790 (1720 - 1742)	820 - 830 (1808 - 1830)	755 - 765 (1664 - 1687)
		Total	kg (lb)	1655 - 1690 (3649 - 3726)	1710 - 1745 (3770 - 3847)	1775 - 1790 (3913 - 3946)	1745 - 1780 (3847 - 3924)
	Gross Vehicle Weight	Front	kg (lb)	1160 - 1195 (2557 - 3395)	1265 - 1300 (2789 - 2866)	1105 - 1195 (2436 - 2635)	1250 - 1285 (2756 - 2833)
		Rear	kg (lb)	1505 - 1540 (2635 - 3318)	1590 - 1625 (3505 - 3583)	1460 - 1540 (3219 - 3395)	1465 - 1500 (3230 - 3307)
		Total	kg (lb)	2700 (5952)	2890 (6371)	2650 (5842)	2750 (6063)
	Fuel Tank Capacity		ℓ (Imp. gal.)	70 (15.4)	70 (15.4)	70 (15.4)	70 (15.4)
	Luggage Compartment Capacity		m^3 (cu.ft.)	—	—	—	—
Performance	Max. Speed		km/h (mph)	150 (93)	150 (93)	150 (93)	135 (84)
	Max. Cruising Speed		km/h (mph)	120 (74)	120 (74)	120 (74)	—
	Max. Permissible Speed	1st Gear	km/h (mph)	33 (20)	33 (20)	33 (20)	30 (19)
		2nd Gear	km/h (mph)	57 (35)	57 (35)	57 (35)	51 (32)
		3rd Gear	km/h (mph)	99 (61)	99 (61)	99 (61)	87 (54)
		4th Gear	km/h (mph)	—	—	—	—
	Min. Turning Radius	Tire	m (ft.)	4.7 (15.4)	5.2 (17.1)	5.2 (17.1)	4.7 (15.4)
		Body	m (ft.)	5.3 (17.4)	5.8 (19.0)	5.8 (19.0)	5.3 (17.4)
Engine	Engine Type			2RZ-E	2RZ-E	2RZ-E	5L
	Valve Mechanism			OHC, Chain Drive	OHC, Chain Drive	OHC, Chain Drive	OHC, Belt Drive
	Bore x Stroke		mm (in.)	95 x 86 (3.74 x 3.39)	95 x 86 (3.74 x 3.39)	95 x 86 (3.74 x 3.39)	99.5 x 96 (3.91 x 3.78)
	Displacement		cm^3 (cu.in.)	2438 (148.8)	2438 (148.8)	2438 (148.8)	2986 (117.6)
	Compression Ratio			8.8 : 1	8.8 : 1	8.8 : 1	22.2 : 1
	Carburetor Type or Injection Pump Type (Diesel)			EFI	EFI	EFI	Distributor Type
	Research Octane No. or Cetane No. (Diesel)			90 or more higher	90 or more higher	90 or more higher	48 or more higher
	Max. Output (EEC)		kW/rpm	88/4800	88/4800	88/4800	66/4000
	Max. Torque (EEC)		N·m/rpm	200/2600	200/2600	200/2600	192/2400
Engine Electrical	Battery Capacity (5HR)		Voltage & Amp. hr.	12-48	12-48	12-48	12-55 x 2
	Alternator Output		Watts	840	840	960	960
	Starter Output		kW	1.4	1.4	2.7	2.7
Chassis	Clutch Type			Dry, Single Plate, Diaphragm	Dry, Single Plate, Diaphragm	Dry, Single Plate, Diaphragm	Dry, Single Plate, Diaphragm
	Transmission Type			G55	G55	G55	G55
	Transmission Gear Ratio	In First		4.452	4.452	4.452	4.452
		In Second		2.619	2.619	2.619	2.619
		In Third		1.517	1.517	1.517	1.517
		In Fourth		1.000	1.000	1.000	1.000
		In Fifth		0.854	0.854	0.854	0.854
		In Reverse		4.472	4.472	4.472	4.472
	Transfer Gear Ratio H4/L4			—	—	—	—
	Differential Gear Ratio (Front/Rear)			—/4.300	—/4.300	—/4.300	—/4.300
	Differential Gear Size (Front/Rear)		in.	—/8.07	—/8.07	—/8.07	—/8.07
	Brake Type	Front		Ventilated Disc	Ventilated Disc	Ventilated Disc	Ventilated Disc
		Rear		Leading-Trailing Drum	Leading-Trailing Drum	Leading-Trailing Drum	Leading-Trailing Drum
	Parking Brake Type			Leading-Trailing Drum	Leading-Trailing Drum	Leading-Trailing Drum	Leading-Trailing Drum
	Brake Booster Type and Size		in.	Tandem 8.5" + 8.5"	Tandem 8.5" + 8.5"	Tandem 8.5" + 8.5"	Tandem 8.5" + 8.5"
	Proportioning Valve Type			LSP and BV	LSP and BV	LSP and BV	LSP and BV
	Suspension Type	Front		Double Wishbone	Double Wishbone	Double Wishbone	Double Wishbone
		Rear		Leaf Spring, Rigid	Leaf Spring, Rigid	4-Link, Rigid	Leaf Spring, Rigid
	Stabilizer Bar	Front		Standard	Standard	Standard	Standard
		Rear		—	—	—	—
	Steering Gear Type			Rack and Pinion	Rack and Pinion	Rack and Pinion	Rack and Pinion
	Steering Gear Ratio (Overall)			25.82, 18.68*5	25.82, 18.68*5	18.65	25.82, 18.68*5
	Power Steering Type			Integral Type	Integral Type	Integral Type	Integral Type

*1: With Step Bumper
*2: With Snorkel Cleaner Air Duct
*3: With P195/70 R15 Tire
*5: With Power Steering
*6: Option
*7: Set Option with Cold Area Spec.
*9: With Nigeria, Algeria and G.C.C. Countries

	Russia			General Countries		
	4-Door Commuter			4-Door Van (Standard)	4-Door Commuter	4-Door Van (Long)
	Standard			GL	Standard	
	LH174L-BRMRSX	LH166L-BFMRSX	LH176L-BRMRSX	RZH102L-RGMGS	RZH104L-BFMRS	RZH112R-RBMRS
	4900 (192.9)	4640 (182.7)	4900 (192.9)	4690 (184.6)	4640 (182.7)	4900 (192.9), 4855 (191.1)*1
	1690 (66.5)	1690 (66.5)	1690 (66.5)	1690 (66.5), 1745 (68.7)*2	1690 (66.5), 1745 (68.7)	1690 (66.5), 1745 (68.7)*2
	1935 (76.2)	1935 (76.2)	1935 (76.2)	1945 (76.6)	1935 (76.2)	1945 (76.6)
	2590 (102.0)	2300 (91.7)	2590 (102.0)	2590 (102.0)	2330 (91.3)	2590 (102.0)
	1450 (57.1), 1465 (57.7)*2	1445 (56.9)	1445 (56.9)	1450 (57.1), 1465 (57.7)*2	1450 (57.1), 1465 (57.7)*3	1450 (57.1), 1465 (57.7)*2
	1430 (56.3), 1445 (56.9)*2	1440 (56.7)	1440 (56.7)	1430 (56.3), 1445 (56.9)*2	1430 (56.3), 1445 (56.9)*3	1430 (56.3), 1445 (56.9)*2
	3865 (152.2)	3485 (137.2)	3865 (152.2)	3130 (123.2)	3485 (137.2)	980 (38.6)
	1540 (60.6)	1540 (60.6)	1540 (60.6)	1520 (59.8)	1540 (60.6)	1480 (58.3)
	1335 (52.6)	1335 (52.6)	1335 (52.6)	1310 (51.6)	1335 (52.6)	1345 (53.0)
	—	—	—	565 (22.2)	—	2975 (117.1)
	—	—	—	1540 (60.6)	—	1540 (60.6)
	—	—	—	1310 (51.6)	—	1345 (53.0)
	1155 (45.5)	1155 (45.5)	1155 (45.5)	1205 (47.4)	1155 (45.5)	1155 (45.5)
	1155 (45.5)	1155 (45.5)	1155 (45.5)	1155 (45.5)	1155 (45.5)	1155 (45.5), 1110 (43.7)*1
	180 (7.1)	180 (7.1)	180 (7.1)	180 (7.1)	180 (7.1)	180 (7.1)
	19°	23°	23°	18°	19°	19°
	18°	20°	20°	18°	18°	18°
	1005 - 1030 (2216 - 2271)	1075 - 1100 (2370 - 2425)	1090 - 1115 (2403 - 2458)	955 - 960 (2105 - 2116)	905 - 940 (1995 - 2072)	870 - 905 (1918 - 1995)
	765 - 775 (1687 - 1709)	795 - 805 (1753 - 1775)	805 - 815 (1775 - 1797)	755 - 765 (1664 - 1687)	735 - 750 (1620 - 1653)	665 - 690 (1466 - 1521)
	1770 - 1805 (3902 - 3979)	1870 - 1905 (4123 - 4200)	1895 - 1930 (4178 - 4255)	1710 - 1725 (3770 - 3803)	1640 - 1690 (3616 - 3726)	1535 - 1595 (3384 - 3516)
	1330 - 1370 (2932 - 3020)	1325 - 1360 (2921 - 2998)	1410 - 1445 (3109 - 3186)	1150 - 1220 (2535 - 2690)	1145 - 1195 (3524 - 2635)	1235 - 1260 (2723 - 2778)
	1600 - 1640 (3527 - 3616)	1540 - 1575 (3395 - 3472)	1675 - 1710 (3693 - 3770)	1280 - 1350 (2822 - 2976)	1505 - 1555 (3318 - 3428)	1340 - 1365 (2954 - 3009)
	2970 (6548)	2900 (6393)	3120 (6878)	2500 (5512)	2700 (5952)	2600 (5732)
	70 (15.4)	70 (15.4)	70 (15.4)	70 (15.4)	70 (15.4)	70 (15.4)
	—	—	—	—	—	—
	135 (84)	135 (84)	135 (84)	145 (90)	145 (90)	145 (90)
	—	—	—	115 (71)	115 (71)	115 (71)
	30 (19)	30 (19)	30 (19)	34 (21)	34 (21)	32 (20)
	51 (32)	51 (32)	51 (32)	58 (36)	58 (36)	54 (33)
	87 (54)	87 (54)	87 (54)	101 (62)	101 (62)	93 (58)
	—	—	—	—	—	—
	5.2 (17.1)	5.6 (18.4)	6.1 (20.0)	4.7 (15.4)	4.7 (15.4)	5.2 (17.1)
	5.8 (19.0)	6.2 (20.3)	6.7 (22.0)	5.3 (17.4)	5.3 (17.4)	5.8 (19.0)
	5L	5L	5L	1RZ	1RZ	1RZ
	OHC, Belt Drive	OHC, Belt Drive	OHC, Belt Drive	OHC, Chain Drive	OHC, Chain Drive	OHC, Chain Drive
	99.5 x 96 (3.91 x 3.78)	99.5 x 96 (3.91 x 3.78)	99.5 x 96 (3.91 x 3.78)	86 x 86 (3.39 x 3.39)	86 x 86 (3.39 x 3.39)	86 x 86 (3.39 x 3.39)
	2986 (117.6)	2986 (117.6)	2986 (117.6)	1998 (121.9)	1998 (121.9)	1998 (121.9)
	22.2 : 1	22.2 : 1	22.2 : 1	9.0 : 1	9.0 : 1	9.0 : 1
	Distributor Type	Distributor Type	Distributor Type	Down Draft, 2 barrel	Down Draft, 2 barrel	Down Draft, 2 barrel
	48 or more higher	48 or more higher	48 or more higher	90 or more higher	90 or more higher	90 or more higher
	66 / 4000	66 / 4000	66 / 4000	74 / 5400	74 / 5400	74 / 5400
	192 / 2400	192 / 2400	192 / 2400	165 / 2600	165 / 2600	165 / 2600
	12-55 x 2	12-55 x 2	12-55 x 2	12-64, 12-48*6	12-40, 12-48*6, *7	12-40
	960	960	960	840	840	840
	2.7	2.7	2.7	2.0, 2.7*2	1.0, 1.4*7	1.0
	Dry, Single Plate, Diaphragm	Dry, Single Plate, Diaphragm	Dry, Single Plate, Diaphragm	Dry, Single Plate, Diaphragm	Dry, Single Plate, Diaphragm	Dry, Single Plate, Diaphragm
	G55	G52	G52	G55	G55	G55
	4.452	3.928	3.928	4.452	4.452	4.452
	2.619	2.333	2.333	2.619	2.619	2.619
	1.517	1.451	1.451	1.517	1.517	1.517
	1.000	1.000	1.000	1.000	1.000	1.000
	0.854	0.851	0.851	0.854	0.854	0.854
	4.472	4.743	4.743	4.472	4.472	4.472
	—	1.000 / —	1.000 / —	—	—	—
	— / 4.300	4.875 / 4.875	4.875 / 4.875	— / 4.555	— / 4.555, 4.300*9	— / 4.555
	— / 8.07	7.48 / 8.07	7.48 / 8.07	— / 8.07	— / 8.07	— / 8.07
	Ventilated Disc	Ventilated Disc	Ventilated Disc	Ventilated Disc	Ventilated Disc	Ventilated Disc
	Leading-Trailing Drum	Leading-Trailing Drum	Leading-Trailing Drum	Leading-Trailing Drum	Leading-Trailing Drum	Leading-Trailing Drum
	Leading-Trailing Drum	Leading-Trailing Drum	Leading-Trailing Drum	Leading-Trailing Drum	Leading-Trailing Drum	Leading-Trailing Drum
	Tandem 8.5" + 8.5"	Tandem 8.5" + 8.5"	Tandem 8.5" + 8.5"	Tandem 8.5" + 8.5"	Tandem 8.5" + 8.5"	Tandem 8.5" + 8.5"
	LSP and BV	LSP and BV	LSP and BV	LSP and BV	LSP and BV	LSP and BV
	Double Wishbone	Double Wishbone	Double Wishbone	Double Wishbone	Double Wishbone	Double Wishbone
	Leaf Spring, Rigid	Leaf Spring, Rigid	Leaf Spring, Rigid	Leaf Spring, Rigid	Leaf Spring, Rigid	Leaf Spring, Rigid
	Standard	Standard	Standard	Standard	Standard	Standard
	—	—	—	—	—	—
	Rack and Pinion	Rack and Pinion	Rack and Pinion	Rack and Pinion	Rack and Pinion	Rack and Pinion
	25.82, 18.65*5	21.04	21.04	18.68	25.82, 18.68*5	25.82, 18.68*5
	Integral Type	Integral Type	Integral Type	Integral Type	Integral Type	Integral Type

Item \ Area				General Countries			
Body Type				4-Door Van (Long)	5-Door Van (Long)	4-Door Commuter	
Vehicle Grade				Standard			
Model Code				RZH112L-RBMRS	RZH112L-SRMRS	RZH114L-ZRMRS	RZH114R-BRMRS
Major Dimensions & Vehicle Weights	Overall	Length	mm (in.)	4900 (192.9), 4855 (191.1)*1	4900 (192.9), 4855 (191.1)*1	4900 (192.9)	4900 (192.9)
		Width	mm (in.)	1690 (66.5), 1745 (68.7)*2	1690 (66.5), 1745 (68.7)*2	1690 (66.5), 1745 (68.7)*2	1690 (66.5), 1745 (68.7)*2
		Height	mm (in.)	1945 (76.6)	1945 (76.6)	2225 (87.6)	1935 (76.2)
	Wheel Base		mm (in.)	2590 (102.0)	2590 (102.0)	2590 (102.0)	2590 (102.0)
	Tread	Front	mm (in.)	1450 (57.1), 1465 (57.7)*2	1450 (57.1), 1465 (57.7)*3	1450 (57.1), 1465 (57.7)*3	1450 (57.1), 1465 (57.7)*3
		Rear	mm (in.)	1430 (56.3), 1445 (56.9)*2	1430 (56.3), 1445 (56.9)*3	1430 (56.3), 1445 (56.9)*3	1430 (56.3), 1445 (56.9)*3
	Room	Length	mm (in.)	980 (38.6)	1990 (78.3)	3865 (152.2)	3865 (152.2)
		Width	mm (in.)	1480 (58.3)	1540 (60.6)	1540 (60.6)	1540 (60.6)
		Height	mm (in.)	1345 (53.0)	1345 (53.0)	1605 (63.2)	1335 (52.6)
	Cargo Space	Length	mm (in.)	2975 (117.1)	1965 (77.4)	—	—
		Width	mm (in.)	1540 (60.6)	1540 (60.6)	—	—
		Height	mm (in.)	1345 (53.0)	1345 (53.0)	—	—
	Overhang	Front	mm (in.)	1155 (45.5)	1155 (45.5)	1155 (45.5)	1155 (45.5)
		Rear	mm (in.)	1155 (45.5), 1110 (43.7)*1	1155 (45.5), 1110 (43.7)*1	1155 (45.5)	1155 (45.5)
	Min. Running Ground Clearance		mm (in.)	180 (7.1)	180 (7.1)	180 (7.1)	180 (7.1)
	Angle of Approach		degrees	19°	19°	19°	19°
	Angle of Departure		degrees	18°	18°	18°	18°
	Curb Weight	Front	kg (lb)	875 - 910 (1929 - 2006)	890 - 920 (1964 - 2028)	920 - 955 (2028 - 2105)	915 - 945 (2017 - 2083)
		Rear	kg (lb)	665 - 690 (1466 - 1521)	715 - 735 (1576 - 1620)	795 - 810 (1753 - 1786)	775 - 790 (1709 - 1742)
		Total	kg (lb)	1540 - 1600 (3395 - 3527)	1605 - 1655 (3538 - 3649)	1715 - 1765 (3781 - 3891)	1690 - 1735 (3726 - 3825)
	Gross Vehicle Weight	Front	kg (lb)	1235 - 1260 (2723 - 2778)	1210 - 1250 (2668 - 2756)	1255 - 1310 (2767 - 2888)	1245 - 1290 (2745 - 2844)
		Rear	kg (lb)	1340 - 1365 (2954 - 3009)	1350 - 1390 (2976 - 3064)	1580 - 1635 (3483 - 3605)	1600 - 1645 (3527 - 3627)
		Total	kg (lb)	2600 (5732)	2600 (5732)	2890 (6371)	2890 (6371)
	Fuel Tank Capacity		ℓ (Imp. gal.)	70 (15.4)	70 (15.4)	70 (15.4)	70 (15.4)
	Luggage Compartment Capacity		m^3 (cu.ft.)	—	—	—	—
Performance	Max. Speed		km/h (mph)	145 (90)	145 (90)	145 (90)	145 (90)
	Max. Cruising Speed		km/h (mph)	115 (71)	115 (71)	115 (71)	115 (71)
	Max. Permissible Speed	1st Gear	km/h (mph)	32 (20)	32 (20)	32 (20)	32 (20)
		2nd Gear	km/h (mph)	54 (33)	54 (33)	54 (33)	54 (33)
		3rd Gear	km/h (mph)	93 (58)	93 (58)	93 (58)	93 (58)
		4th Gear	km/h (mph)	—	—	—	—
	Min. Turning Radius	Tire	m (ft.)	5.2 (17.1)	5.2 (17.1)	5.2 (17.1)	5.2 (17.1)
		Body	m (ft.)	5.8 (19.0)	5.8 (19.0)	5.8 (19.0)	5.8 (19.0)
Engine	Engine Type			1RZ	1RZ	1RZ	1RZ
	Valve Mechanism			OHC, Chain Drive	OHC, Chain Drive	OHC, Chain Drive	OHC, Chain Drive
	Bore x Stroke		mm (in.)	86 x 86 (3.39 x 3.39)	86 x 86 (3.39 x 3.39)	86 x 86 (3.39 x 3.39)	86 x 86 (3.39 x 3.39)
	Displacement		cm^3 (cu.in.)	1998 (121.9)	1998 (121.9)	1998 (121.9)	1998 (121.9)
	Compression Ratio			9.0 : 1	9.0 : 1	9.0 : 1	9.0 : 1
	Carburetor Type or Injection Pump Type (Diesel)			Down Draft, 2 barrel	Down Draft, 2 barrel	Down Draft, 2 barrel	Down Draft, 2 barrel
	Research Octane No. or Cetane No. (Diesel)			90 or more higher	90 or more higher	90 or more higher	90 or more higher
	Max. Output (EEC)		kW/rpm	74/5400	74/5400	74/5400	74/5400
	Max. Torque (EEC)		N·m/rpm	165/2600	165/2600	165/2600	165/2600
Engine Electrical	Battery Capacity (5HR)		Voltage & Amp. hr.	12-40, 12-48*6, *7	12-40, 12-48*6	12-40, 12-48*6, *7	12-40
	Alternator Output		Watts	840	840	840	840
	Starter Output		kW	1.0, 1.4*6	1.0, 1.4*7	1.0, 1.4*7	1.0
Chassis	Clutch Type			Dry, Single Plate, Diaphragm	Dry, Single Plate, Diaphragm	Dry, Single Plate, Diaphragm	Dry, Single Plate, Diaphragm
	Transmission Type			G55	G55	G55	G55
	Transmission Gear Ratio	In First		4.452	4.452	4.452	4.452
		In Second		2.619	2.619	2.619	2.619
		In Third		1.517	1.517	1.517	1.517
		In Fourth		1.000	1.000	1.000	1.000
		In Fifth		0.854	0.854	0.854	0.854
		In Reverse		4.472	4.472	4.472	4.472
	Transfer Gear Ratio H4/L4			—	—	—	—
	Differential Gear Ratio (Front/Rear)			—/4.555, —/4.300*6, *9	—/4.555, —/4.300*6, *9	—/4.555, 4.300*6, *9	—/4.555
	Differential Gear Size (Front/Rear)		in.	—/8.07	—/8.07	—/8.07	—/8.07
	Brake Type	Front		Ventilated Disc	Ventilated Disc	Ventilated Disc	Ventilated Disc
		Rear		Leading-Trailing Drum	Leading-Trailing Drum	Leading-Trailing Drum	Leading-Trailing Drum
	Parking Brake Type			Leading-Trailing Drum	Leading-Trailing Drum	Leading-Trailing Drum	Leading-Trailing Drum
	Brake Booster Type and Size		in.	Tandem 8.5" + 8.5"	Tandem 8.5" + 8.5"	Tandem 8.5" + 8.5"	Tandem 8.5" + 8.5"
	Proportioning Valve Type			LSP and BV	LSP and BV	LSP and BV	LSP and BV
	Suspension Type	Front		Double Wishbone	Double Wishbone	Double Wishbone	Double Wishbone
		Rear		Leaf Spring, Rigid	Leaf Spring, Rigid	Leaf Spring, Rigid	Leaf Spring, Rigid
	Stabilizer Bar	Front		Standard	Standard	Standard	Standard
		Rear		—	—	—	—
	Steering Gear Type			Rack and Pinion	Rack and Pinion	Rack and Pinion	Rack and Pinion
	Steering Gear Ratio (Overall)			25.82, 18.68*5	25.82, 18.68*5	25.82, 18.68*5	25.82, 18.68*5
	Power Steering Type			Integral Type	Integral Type	Integral Type	Integral Type

*1: With Step Bumper
*2: With Snorkel Cleaner Air Duct
*3: With P195/70 R15 Tire
*4: With ABS
*5: With Power Steering
*6: Option
*7: Set Option with Cold Area Spec.
*8: With New Zealand
*9: With Nigeria, Algeria and G.C.C. Countries

	General Countries					
	4-Door Commuter	5-Door Van (Standard)		4-Door Commuter		4-Door Van (Long)
	Standard				GL	
	RZH114L-BRMRS	RZH103R-SBMRE	RZH103R-SRMRE	RZH105R-BFMRE	RZH105L-BFMNE	RZH153R-RBMNE
5	4900 (192.9)	4640 (182.7), 4595 (180.9)*1	4640 (182.7), 4595 (180.9)*1	4640 (182.7)	4690 (184.6)	4950 (194.9)
	1690 (66.5), 1745 (68.7)*2	1690 (66.5)	1690 (66.5)	1690 (66.5)	1690 (66.5)	1690 (66.5)
	1935 (76.2)	1945 (76.6)	1945 (76.6)	1935 (76.2)	1935 (76.2)	1985 (78.1)
	2590 (102.0)	2330 (91.7)	2330 (91.7)	2330 (91.3)	2330 (91.7)	2590 (102.0)
	1450 (57.1), 1465 (57.7)*3	1450 (57.1), 1465 (57.7)*3	1450 (57.1), 1465 (57.7)*3	1450 (57.1), 1465 (57.7)*3	1450 (57.1), 1465 (57.7)*3	1450 (57.1), 1465 (57.7)*3
10	1430 (56.3), 1445 (56.9)*3	1430 (56.3), 1445 (56.9)*3	1430 (56.3), 1445 (56.9)*3	1430 (56.3), 1445 (56.9)*3	1430 (56.3), 1445 (56.9)*3	1430 (56.3), 1445 (56.9)*3
	3865 (152.2)	980 (38.6)	1990 (78.3)	3485 (137.2)	3485 (137.2)	980 (38.6)
	1540 (60.6)	1480 (58.3)	1540 (60.6)	1540 (60.6)	1540 (60.6)	1480 (58.3)
	1335 (52.6)	1345 (53.0)	1345 (53.0)	1335 (52.6)	1335 (52.6)	1345 (53.0)
	—	2715 (106.9)	1705 (67.1)	—	—	2975 (117.1)
15	—	1540 (60.6)	1540 (60.6)	—	—	1540 (60.6)
	—	1345 (53.0)	1345 (53.0)	—	—	1345 (53.0)
	1155 (45.5)	1155 (45.5)	1155 (45.5)	1155 (45.5)	1205 (47.4)	1205 (47.4)
	1155 (45.5)	1155 (45.5), 1110 (43.7)*1	1155 (45.5), 1110 (43.7)*1	1155 (45.5)	1155 (45.5)	1155 (45.5)
	180 (7.1)	180 (7.1)	180 (7.1)	180 (7.1)	180 (7.1)	180 (7.1)
20	19°	19°	19°	19°	19°	18°
	18°	18°	18°	18°	18°	18°
	920 - 955 (2028 - 2105)	815 - 835 (1797 - 1841)	875 - 905 (1929 - 1995)	895 - 920 (1973 - 2028)	940 - 965 (2072 - 2127)	970 - 975 (2138 - 2150)
	775 - 790 (1709 - 1742)	645 - 660 (1422 - 1455)	695 - 715 (1532 - 1576)	720 - 735 (1587 - 1620)	735 - 745 (1620 - 1642)	830 - 835 (1830 - 1841)
	1695 - 1745 (3737 - 3847)	1460 - 1495 (3219 - 3296)	1570 - 1620 (3461 - 3571)	1615 - 1655 (3560 - 3649)	1675 - 1710 (3693 - 3770)	1800 - 1810 (3968 - 3990)
25	1250 - 1300 (2756 - 2866)	1195 - 1210 (2635 - 2668)	1155 - 1200 (2546 - 2646)	—	1165 - 1200 (2568 - 2646)	—
	1590 - 1640 (3505 - 3616)	1650 - 1665 (3638 - 3671)	1300 - 1345 (2866 - 2965)	—	1500 - 1535 (3307 - 3384)	—
	2890 (6371)	2860 (6305)	2500 (5512)	3030 (6680)	2970 (6548)	2750 (6063)
	70 (15.4)	70 (15.4)	70 (15.4)	70 (15.4)	70 (15.4)	70 (15.4)
	—	—	—	—	—	—
30	145 (90)	150 (93)	150 (93)	150 (93)	150 (93)	150 (93)
	115 (71)	120 (74)	120 (74)	120 (74)	120 (74)	120 (74)
	32 (20)	33 (20)	33 (20)	33 (20)	33 (20)	35 (22)
	54 (33)	57 (35)	57 (35)	57 (35)	57 (35)	60 (37)
	93 (58)	99 (61)	99 (61)	90 (61)	90 (61)	104 (604)
35	—	—	—	—	—	—
	5.2 (17.1)	4.7 (15.4)	4.7 (15.4)	4.7 (15.4)	4.7 (15.4)	5.2 (17.1)
	5.8 (19.0)	5.3 (17.4)	5.3 (17.4)	5.3 (17.4)	5.3 (17.4)	5.8 (19.0)
	1RZ	2RZ-E	2RZ-E	2RZ-E	2RZ-E	2RZ-E
	OHC, Chain Drive	OHC, Chain Drive	OHC, Chain Drive	OHC, Chain Drive	OHC, Chain Drive	OHC, Chain Drive
40	86 x 86 (3.39 x 3.39)	95 x 86 (3.74 x 3.39)	95 x 86 (3.74 x 3.39)	95 x 86 (3.74 x 3.39)	95 x 86 (3.74 x 3.39)	95 x 86 (3.74 x 3.39)
	1998 (121.9)	2438 (148.8)	2438 (148.8)	2438 (148.8)	2438 (148.8)	2438 (148.8)
	9.0 : 1	8.8 : 1	8.8 : 1	8.8 : 1	8.8 : 1	8.8 : 1
	Down Draft, 2 barrel	EFI	EFI	EFI	EFI	EFI
	90 or more higher	90 or more higher	90 or more higher	90 or more higher	90 or more higher	90 or more higher
45	74 / 5400	88 / 4800	88 / 4800	88 / 4800	88 / 4800	88 / 4800
	165 / 2600	198 / 2600	198 / 2000, 200 / 2600*8	198 / 2600	198 / 2600	198 / 2600
	12-40, 12-48*6, *7	12-40	12-40	12-40	12-40, 12-48*6, *7	12-48
	840	840	840	840	840	840
	1.0, 1.4*7	1.0	1.0	1.0	1.0, 1.4*7	1.0
50	Dry, Single Plate, Diaphragm	Dry, Single Plate, Diaphragm	Dry, Single Plate, Diaphragm	Dry, Single Plate, Diaphragm	Dry, Single Plate, Diaphragm	Dry, Single Plate, Diaphragm
	G55	G55	G55	G55	G55	G55
	4.452	4.452	4.452	4.452	4.452	4.452
	2.619	2.619	2.619	2.619	2.619	2.619
	1.517	1.517	1.517	1.517	1.517	1.517
55	1.000	1.000	1.000	1.000	1.000	1.000
	0.854	0.854	0.854	0.854	0.854	0.854
	4.472	4.472	4.472	4.472	4.472	4.472
	—	—	—	—	—	—
	—/4.555, 4.300*9	—/4.100	—/4.100	—/4.100	—/4.555, 4.300*4, *9	—/4.100
60	—/8.07	—/8.07	—/8.07	—/8.07	—/8.07	—/8.07
	Ventilated Disc	Ventilated Disc	Ventilated Disc	Ventilated Disc	Ventilated Disc	Ventilated Disc
	Leading-Trailing Drum	Leading-Trailing Drum	Leading-Trailing Drum	Leading-Trailing Drum	Leading-Trailing Drum	Leading-Trailing Drum
	Leading-Trailing Drum	Leading-Trailing Drum	Leading-Trailing Drum	Leading-Trailing Drum	Leading-Trailing Drum	Leading-Trailing Drum
	Tandem 8.5" + 8.5"	Tandem 8.5" + 8.5"	Tandem 8.5" + 8.5"	Tandem 8.5" + 8.5"	Single 10"	Tandem 8" + 9"
65	LSP and BV	LSP and BV	LSP and BV	LSP and BV	LSP and BV	LSP and BV
	Double Wishbone	Double Wishbone	Double Wishbone	Double Wishbone	Double Wishbone	Double Wishbone
	Leaf Spring, Rigid	Leaf Spring, Rigid	Leaf Spring, Rigid	Leaf Spring, Rigid	Leaf Spring, Rigid	4-Link, Rigid
	Standard	Standard	Standard	Standard	Standard	Standard
	—	—	—	—	—	Standard
70	Rack and Pinion	Rack and Pinion	Rack and Pinion	Rack and Pinion	Rack and Pinion	Rack and Pinion
	25.82, 18.68*5	25.82, 18.68*5	25.82, 18.68*5	25.82, 18.68*5	25.82, 18.68*5	18.68
	Integral Type	Integral Type	Integral Type	Integral Type	Integral Type	Integral Type

Item \ Area				General Countries			
Body Type				4-Door Van (Long)			
Vehicle Grade				Standard			DX
Model Code				RZH113R-RBMRE	RZH113L-RBMRE	RZH113R-RRMRE	RZH113R-RHMDE
Major Dimensions & Vehicle Weights	Overall	Length	mm (in.)	4900 (192.9), 4855 (191.1)*1	4900 (192.9), 4855 (191.1)*1	4900 (192.9), 4855 (191.1)*1	4900 (192.9)
		Width	mm (in.)	1690 (66.5)	1690 (66.5)	1690 (66.5)	1690 (66.5)
		Height	mm (in.)	1945 (76.6)	1945 (76.6)	1945 (76.6)	1945 (76.6)
	Wheel Base		mm (in.)	2590 (102.0)	2590 (102.0)	2590 (102.0)	2590 (102.0)
	Tread	Front	mm (in.)	1450 (57.1), 1465 (57.7)*2	1450 (57.1), 1465 (57.7)*2	1450 (57.1), 1465 (57.7)*2	1450 (57.1), 1465 (57.7)*3
		Rear	mm (in.)	1430 (56.3), 1445 (56.9)*2	1430 (56.3), 1445 (56.9)*2	1430 (56.3), 1445 (56.9)*2	1430 (56.3), 1445 (56.9)*3
	Room	Length	mm (in.)	980 (38.6)	980 (38.6)	1990 (78.3)	2470 (97.2)
		Width	mm (in.)	1480 (58.3)	1480 (58.3)	1540 (60.6)	1540 (60.6)
		Height	mm (in.)	1345 (53.0)	1345 (53.0)	1345 (53.0)	1345 (53.0)
	Cargo Space	Length	mm (in.)	2975 (117.1)	2975 (117.1)	1965 (77.4)	1485 (58.5)
		Width	mm (in.)	1540 (60.6)	1540 (60.6)	1540 (60.6)	1540 (60.6)
		Height	mm (in.)	1345 (53.0)	1345 (53.0)	1345 (53.0)	1345 (53.0)
	Overhang	Front	mm (in.)	1155 (45.5)	1155 (45.5)	1155 (45.5)	1155 (45.5)
		Rear	mm (in.)	1155 (45.5), 1110 (43.7)*1	1155 (45.5), 1110 (43.7)*1	1155 (45.5), 1110 (43.7)*1	1155 (45.5)
	Min. Running Ground Clearance		mm (in.)	180 (7.1)	180 (7.1)	180 (7.1)	180 (7.1)
	Angle of Approach		degrees	19°	19°	19°	19°
	Angle of Departure		degrees	18°	18°	18°	18°
	Curb Weight	Front	kg (lb)	870 - 905 (1918 - 1995)	880 - 915 (1940 - 2017)	845 - 905 (1863 - 1995)	835 - 930 (1841 - 2050)
		Rear	kg (lb)	665 - 690 (1466 - 1521)	665 - 690 (1466 - 1521)	690 - 705 (1521 - 1554)	765 - 785 (1687 - 1731)
		Total	kg (lb)	1535 - 1595 (3384 - 3516)	1545 - 1605 (3406 - 3538)	1535 - 1610 (3384 - 3549)	1600 - 1715 (3527 - 3781)
	Gross Vehicle Weight	Front	kg (lb)	1235 - 1260 (2723 - 2778)	1275 - 1300 (2811 - 2866)	1180 - 1255 (2601 - 2767)	955 - 1220 (2105 - 2690)
		Rear	kg (lb)	1340 - 1365 (2954 - 3009)	1500 - 1525 (3307 - 3362)	1545 - 1620 (3406 - 3571)	1330 - 1595 (2932 - 3516)
		Total	kg (lb)	2600 (5732)	2800 (6173)	2800 (6173)	2550 (5622)
	Fuel Tank Capacity		ℓ (Imp. gal.)	70 (15.4)	70 (15.4)	70 (15.4)	70 (15.4)
	Luggage Compartment Capacity		m^3 (cu.ft.)	—	—	—	—
Performance	Max. Speed		km/h (mph)	150 (93)	150 (93)	150 (93)	150 (93)
	Max. Cruising Speed		km/h (mph)	120 (74)	120 (74)	120 (74)	120 (74)
	Max. Permissible Speed	1st Gear	km/h (mph)	35 (22)	35 (22)	35 (22)	35 (22)
		2nd Gear	km/h (mph)	60 (37)	60 (37)	60 (37)	60 (37)
		3rd Gear	km/h (mph)	104 (64)	104 (64)	104 (64)	104 (64)
		4th Gear	km/h (mph)	—	—	—	—
	Min. Turning Radius	Tire	m (ft.)	5.2 (17.1)	5.2 (17.1)	5.2 (17.1)	5.2 (17.1)
		Body	m (ft.)	5.8 (19.0)	5.8 (19.0)	5.8 (19.0)	5.8 (19.0)
Engine	Engine Type			2RZ-E	2RZ-E	2RZ-E	2RZ-E
	Valve Mechanism			OHC, Chain Drive	OHC, Chain Drive	OHC, Chain Drive	OHC, Chain Drive
	Bore x Stroke		mm (in.)	95 x 86 (3.74 x 3.39)	95 x 86 (3.74 x 3.39)	95 x 86 (3.74 x 3.39)	95 x 86 (3.74 x 3.39)
	Displacement		cm^3 (cu.in.)	2438 (148.8)	2438 (148.8)	2438 (148.8)	2438 (148.8)
	Compression Ratio			8.8 : 1	8.8 : 1	8.8 : 1	8.8 : 1
	Carburetor Type or Injection Pump Type (Diesel)			EFI	EFI	EFI	EFI
	Research Octane No. or Cetane No. (Diesel)			90 or more higher	90 or more higher	90 or more higher	90 or more higher
	Max. Output (EEC)		kW/rpm	88/4800	88/4800	88/4800	88/4800
	Max. Torque (EEC)		N·m/rpm	198/2600	198/2600	198/2600, 200/2600*8	198/2600
Engine Electrical	Battery Capacity (5HR)		Voltage & Amp. hr.	12-40	12-40, 12-48*6, *7	12-40	12-40, 12-48*6
	Alternator Output		Watts	840	840	840	840
	Starter Output		kW	1.0	1.0, 1.4*6	1.0	1.0
Chassis	Clutch Type			Dry, Single Plate, Diaphragm	Dry, Single Plate, Diaphragm	Dry, Single Plate, Diaphragm	Dry, Single Plate, Diaphragm
	Transmission Type			G55	G55	G55	G55
	Transmission Gear Ratio	In First		4.452	4.452	4.452	4.452
		In Second		2.619	2.619	2.619	2.619
		In Third		1.517	1.517	1.517	1.517
		In Fourth		1.000	1.000	1.000	1.000
		In Fifth		0.854	0.854	0.854	0.854
		In Reverse		4.472	4.472	4.472	4.472
	Transfer Gear Ratio H4/L4			—	—	—	—
	Differential Gear Ratio (Front/Rear)			—/4.100	—/4.300	—/4.100	—/4.100
	Differential Gear Size (Front/Rear)		in.	—/8.07	—/8.07	—/8.07	—/8.07
	Brake Type	Front		Ventilated Disc	Ventilated Disc	Ventilated Disc	Ventilated Disc
		Rear		Leading-Trailing Drum	Leading-Trailing Drum	Leading-Trailing Drum	Leading-Trailing Drum
	Parking Brake Type			Leading-Trailing Drum	Leading-Trailing Drum	Leading-Trailing Drum	Leading-Trailing Drum
	Brake Booster Type and Size		in.	Tandem 8.5" + 8.5"	Tandem 8.5" + 8.5"	Tandem 8.5" + 8.5"	Tandem 8.5" + 8.5"
	Proportioning Valve Type			LSP and BV	LSP and BV	LSP and BV	LSP and BV
	Suspension Type	Front		Double Wishbone	Double Wishbone	Double Wishbone	Double Wishbone
		Rear		Leaf Spring, Rigid	Leaf Spring, Rigid	Leaf Spring, Rigid	Leaf Spring, Rigid
	Stabilizer Bar	Front		Standard	Standard	Standard	Standard
		Rear		—	—	—	—
	Steering Gear Type			Rack and Pinion	Rack and Pinion	Rack and Pinion	Rack and Pinion
	Steering Gear Ratio (Overall)			25.82, 18.68*5	25.82, 18.68*5	25.82, 18.68*5	25.82, 18.68*5
	Power Steering Type			Integral Type	Integral Type	Integral Type	Integral Type

*1: With Step Bumper
*2: With Snorkel Cleaner Air Duct
*3: With P195/70 R15 Tire
*5: With Power Steering
*6: Option
*7: Set Option with Cold Area Spec.
*8: With New Zealand

General Countries					
5-Door Van (Long)			4-Door Commuter		
Standard			GL		Standard
RZH113R-SBMRE	RZH113R-SRMRE	RZH113L-SRMRE	RZH115L-BFMGE	RZH155L-BFMGE	RZH115L-BRMRE
4900 (192.9), 4855 (191.1)*1	4900 (192.9), 4855 (191.1)*1	4900 (192.9)	4950 (194.9)	4950 (194.9)	4900 (192.9)
1690 (66.5)	1690 (66.5)	1690 (66.5)	1690 (66.5)	1690 (66.5)	1690 (66.5)
1945 (76.6)	1945 (76.6)	1945 (76.6)	1935 (76.2)	1935 (76.2)	1935 (76.2)
2330 (91.7)	2590 (102.0)	2590 (102.0)	2590 (102.0)	2590 (102.0)	2590 (102.0)
1450 (57.1), 1465 (57.7)*3	1450 (57.1), 1465 (57.7)*3	1450 (57.1), 1465 (57.7)*3	1450 (57.1), 1465 (57.7)*3	1465 (57.7)	1450 (57.1), 1465 (57.7)*3
1430 (56.3), 1445 (56.9)*3	1430 (56.3), 1445 (56.9)*3	1430 (56.3), 1445 (56.9)*3	1430 (56.3), 1445 (56.9)*3	1445 (56.9)	1430 (56.3), 1445 (56.9)*3
980 (38.6)	1990 (78.3)	1990 (78.3)	3865 (152.2)	3865 (152.2)	3865 (152.2)
1480 (58.3)	1540 (60.6)	1540 (60.6)	1540 (60.6)	1335 (52.6)	1540 (60.6)
1345 (53.0)	1345 (53.0)	1345 (53.0)	1335 (52.6)	—	1335 (52.6)
2975 (117.1)	1965 (77.4)	1965 (77.4)	—	—	—
1540 (60.6)	1540 (60.6)	1540 (60.6)	—	—	—
1345 (53.0)	1345 (53.0)	1345 (53.0)	—	—	—
1155 (45.5)	1155 (45.5)	1155 (45.5)	1205 (47.4)	1205 (47.4)	1155 (45.5)
1155 (45.5), 1110 (43.7)*1	1155 (45.5), 1110 (43.7)*1	1155 (45.5)	1155 (45.5)	1155 (45.5)	1155 (45.5)
180 (7.1)	180 (7.1)	180 (7.1)	180 (7.1)	180 (7.1)	180 (7.1)
19°	19°	19°	19°	19°	19°
18°	18°	18°	18°	18°	18°
830 - 850 (1830 - 1874)	850 - 910 (1874 - 2006)	850 - 910 (1874 - 2006)	925 - 950 (2039 - 2094)	955 - 960 (2105 - 2116)	925 - 955 (2039 - 2105)
660 - 675 (1455 - 1488)	700 - 720 (1543 - 1587)	700 - 720 (1543 - 1587)	780 - 800 (1720 - 1764)	820 - 830 (1808 - 1830)	775 - 790 (1709 - 1742)
1490 - 1525 (3285 - 3362)	1550 - 1630 (3417 - 3594)	1550 - 1630 (3417 - 3594)	1705 - 1750 (3759 - 3858)	1775 - 1790 (3913 - 3946)	1700 - 1745 (3748 - 3847)
1205 - 1220 (2657 - 2690)	1185 - 1255 (2612 - 2767)	1185 - 1255 (2612 - 2767)	1225 - 1250 (2701 - 2756)	1175 - 1270 (2590 - 2800)	1250 - 1295 (2756 - 2855)
1640 - 1655 (3616 - 3649)	1545 - 1615 (3406 - 3560)	1545 - 1615 (3406 - 3560)	1610 - 1635 (3549 - 3605)	1430 - 1525 (3153 - 3362)	1595 - 1640 (3516 - 3616)
2860 (6305)	2800 (6173)	2800 (6173)	2860 (6305)	2700 (5952)	2890 (6371)
70 (15.4)	70 (15.4)	70 (15.4)	70 (15.4)	70 (15.4)	70 (15.4)
—	—	—	—	—	—
150 (93)	150 (93)	150 (93)	145 (90)	150 (93)	150 (93)
120 (74)	120 (74)	120 (74)	115 (71)	120 (74)	120 (74)
35 (22)	35 (22)	35 (22)	34 (21)	33 (20)	35 (22)
60 (37)	60 (37)	60 (37)	58 (36)	57 (35)	60 (37)
104 (64)	104 (64)	104 (64)	101 (62)	90 (61)	104 (64)
—	—	—	—	—	—
5.2 (17.1)	5.2 (17.1)	5.2 (17.1)	5.2 (17.1)	5.2 (17.1)	5.2 (17.1)
5.8 (19.0)	5.8 (19.0)	5.8 (19.0)	5.8 (19.0)	5.8 (19.0)	5.8 (19.0)
2RZ-E	2RZ-E	2RZ-E	2RZ-E	2RZ-E	2RZ-E
OHC, Chain Drive	OHC, Chain Drive	OHC, Chain Drive	OHC, Chain Drive	OHC, Chain Drive	OHC, Chain Drive
95 x 86 (3.74 x 3.39)	95 x 86 (3.74 x 3.39)	95 x 86 (3.74 x 3.39)	95 x 86 (3.74 x 3.39)	95 x 86 (3.74 x 3.39)	95 x 86 (3.74 x 3.39)
2438 (148.8)	2438 (148.8)	2438 (148.8)	2438 (148.8)	2438 (148.8)	2438 (148.8)
8.8 : 1	8.8 : 1	8.8 : 1	8.8 : 1	8.8 : 1	8.8 : 1
EFI	EFI	EFI	EFI	EFI	EFI
90 or more higher	90 or more higher	90 or more higher	90 or more higher	90 or more higher	90 or more higher
88 / 4800	88 / 4800	88 / 4800	88 / 4800	88 / 4800	88 / 4800
198 / 2600	198 / 2600, 200 / 2600*8	198 / 2600, 200 / 2600*8	198 / 2600	198 / 2600	198 / 2600
12-40	12-40	12-40, 12-48*6, *7	12-40, 12-48*6, *7	12-40, 12-48*6, *7	12-40, 12-48*6, *7
840	840	840	840	840	840
1.0	1.0	1.0	1.0, 1.4*5	1.0, 1.4*2	1.0, 1.4*7
Dry, Single Plate, Diaphragm	Dry, Single Plate, Diaphragm	Dry, Single Plate, Diaphragm	Dry, Single Plate, Diaphragm	Dry, Single Plate, Diaphragm	Dry, Single Plate, Diaphragm
G55	G55	G55	G55	G55	G55
4.452	4.452	4.452	4.452	4.452	4.452
2.619	2.619	2.619	2.619	2.619	2.619
1.517	1.517	1.517	1.517	1.517	1.517
1.000	1.000	1.000	1.000	1.000	1.000
0.854	0.854	0.854	0.854	0.854	0.854
4.472	4.472	4.472	4.472	4.472	4.472
—	—	—	—	—	—
—/4.100	—/4.100	—/4.100	—/4.100	—/4.100	—/4.100
—/8.07	—/8.07	—/8.07	—/8.07	—/8.07	—/8.07
Ventilated Disc	Ventilated Disc	Ventilated Disc	Ventilated Disc	Ventilated Disc	Ventilated Disc
Leading-Trailing Drum	Leading-Trailing Drum	Leading-Trailing Drum	Leading-Trailing Drum	Leading-Trailing Drum	Leading-Trailing Drum
Leading-Trailing Drum	Leading-Trailing Drum	Leading-Trailing Drum	Leading-Trailing Drum	Leading-Trailing Drum	Leading-Trailing Drum
Tandem 8.5" + 8.5"	Tandem 8.5" + 8.5"	Tandem 8.5" + 8.5"	Single 10"	Tandem 8.5" + 8.5", Tandem 8.5" + 9"*1	Tandem 8.5" + 8.5"
LSP and BV	LSP and BV	LSP and BV	LSP and BV	LSP and BV	LSP and BV
Double Wishbone	Double Wishbone	Double Wishbone	Double Wishbone	Double Wishbone	Double Wishbone
Leaf Spring, Rigid	Leaf Spring, Rigid	Leaf Spring, Rigid	Leaf Spring, Rigid	4-Link, Rigid	Leaf Spring, Rigid
Standard	Standard	Standard	Standard	Standard	Standard
—	—	—	—	—	—
Rack and Pinion	Rack and Pinion	Rack and Pinion	Rack and Pinion	Rack and Pinion	Rack and Pinion
25.82, 18.68*5	25.82, 18.68*5	25.82, 18.68*5	25.82, 18.68*5	18.68	25.82, 18.68*5
Integral Type	Integral Type	Integral Type	Integral Type	Integral Type	Integral Type

Item \ Area				General Countries			
Body Type				4-Door Commuter			4-Door Van (Standard)
Vehicle Grade				GL			Standard
Model Code				RZH115L-BRMNE	RZH115L-ZRMNE	RZH135R-JFMGE	LH102L-RBMRS
Major Dimensions & Vehicle Weights	Overall	Length	mm (in.)	4950 (194,9)	4950 (194,9)	5250 (206.7)	4640 (182.7), 4595 (180.9)*1
		Width	mm (in.)	1690 (66.5)	1690 (66.5)	1690 (66.5)	1690 (66.5), 1745 (68.7)*2
		Height	mm (in.)	1935 (70.2)	1935 (70.2)	1970 (77.6)	1945 (76.6)
	Wheel Base		mm (in.)	2590 (102.0)	2590 (102.0)	2890 (113.8)	2330 (91.7)
	Tread	Front	mm (in.)	1450 (57.1), 1465 (57.7)*3	1450 (57.1), 1465 (57.7)*3	1465 (57.7)	1450 (57.1), 1465 (57.7)*2
		Rear	mm (in.)	1430 (56.3), 1445 (56.9)*3	1430 (56.3), 1445 (56.9)*3	1445 (56.9)	1430 (56.3), 1445 (56.9)*2
	Room	Length	mm (in.)	3865 (152.2)	3865 (152.2)	4120 (162.2)	2470 (97.2)
		Width	mm (in.)	1540 (60.6)	1540 (60.6)	1540 (60.6)	1540 (60.6)
		Height	mm (in.)	1335 (52.6)	1335 (52.6)	1360 (53.5)	1345 (53.0)
	Cargo Space	Length	mm (in.)	—	—	—	2715 (106.9)
		Width	mm (in.)	—	—	—	1540 (60.6)
		Height	mm (in.)	—	—	—	1345 (53.0)
	Overhang	Front	mm (in.)	1205 (47.4)	1205 (47.4)	1205 (47.4)	1155 (45.5)
		Rear	mm (in.)	1155 (45.5)	1155 (45.5)	1155 (45.5)	1155 (45.5), 1110 (43.7)*1
	Min. Running Ground Clearance		mm (in.)	180 (7.1)	180 (7.1)	180 (7.1)	180 (7.1)
	Angle of Approach		degrees	19°	19°	19°	19°
	Angle of Departure		degrees	18°	18°	18°	18°
	Curb Weight	Front	kg (lb)	—	—	945 - 950 (2083 - 2094)	920 - 955 (2028 - 2105)
		Rear	kg (lb)	—	—	875 - 880 (1929 - 1940)	665 - 690 (1466 - 1521)
		Total	kg (lb)	—	—	1820 - 1830 (4012 - 4034)	1585 - 1645 (3494 - 3627)
	Gross Vehicle Weight	Front	kg (lb)	—	—	1285 - 1295 (2833 - 2855)	1230 - 1255 (2712 - 2767)
		Rear	kg (lb)	—	—	1505 - 1515 (3318 - 3340)	1245 - 1270 (2745 - 2800)
		Total	kg (lb)	2800 (6173)	2800 (6173)	2800 (6173)	2500 (5512)
	Fuel Tank Capacity		ℓ (Imp. gal.)	70 (15.4)	70 (15.4)	70 (15.4)	70 (15.4)
	Luggage Compartment Capacity		m^3 (cu.ft.)	—	—	—	—
Performance	Max. Speed		km / h (mph)	150 (93)	150 (93)	150 (93)	130 (80)
	Max. Cruising Speed		km / h (mph)	120 (74)	120 (74)	120 (74)	105 (65)
	Max. Permissible Speed	1st Gear	km / h (mph)	35 (22)	35 (22)	33 (20)	26 (16)
		2nd Gear	km / h (mph)	60 (37)	60 (37)	57 (35)	44 (27)
		3rd Gear	km / h (mph)	104 (64)	104 (64)	90 (61)	76 (47)
		4th Gear	km / h (mph)	—	—	—	—
	Min. Turning Radius	Tire	m (ft.)	5.2 (17.1)	5.2 (17.1)	5.7 (18.7)	4.7 (15.4)
		Body	m (ft.)	5.8 (19.0)	5.8 (19.0)	6.3 (20.7)	5.3 (17.4)
Engine	Engine Type			2RZ-E	2RZ-E	2RZ-E	2L
	Valve Mechanism			OHC, Chain Drive	OHC, Chain Drive	OHC, Chain Drive	OHC, Belt Drive
	Bore x Stroke		mm (in.)	95 x 86 (3.74 x 3.39)	95 x 86 (3.74 x 3.39)	95 x 86 (3.74 x 3.39)	92 x 92 (3.62 x 3.62)
	Displacement		cm^3 (cu.in.)	2438 (148.8)	2438 (148.8)	2438 (148.8)	2446 (149.3)
	Compression Ratio			8.8 : 1	8.8 : 1	8.8 : 1	22.2 : 1
	Carburetor Type or Injection Pump Type (Diesel)			EFI	EFI	EFI	Distributor Type
	Research Octane No. or Cetane No. (Diesel)			90 or more higher	90 or more higher	90 or more higher	48 or more higher
	Max. Output (EEC)		kW / rpm	88 / 4800	88 / 4800	88 / 4800	60 / 4000
	Max. Torque (EEC)		N·m / rpm	198 / 2600	198 / 2600	198 / 2600	162 / 2400
Engine Electrical	Battery Capacity (5HR)		Voltage & Amp. hr.	12-40, 12-48*6, *7	12-40, 12-48*6, *7	12-48	12-60, 12-55 x 2*2, *6
	Alternator Output		Watts	840	840	840	840
	Starter Output		kW	1.0, 1.4*7	1.0, 1.4*7	1.0	2.0, 2.7*2
Chassis	Clutch Type			Dry, Single Plate, Diaphragm	Dry, Single Plate, Diaphragm	Dry, Single Plate, Diaphragm	Dry, Single Plate, Diaphragm
	Transmission Type			G55	G55	G55	G55
	Transmission Gear Ratio	In First		4.452	4.452	4.452	4.452
		In Second		2.619	2.619	2.619	2.619
		In Third		1.517	1.517	1.517	1.517
		In Fourth		1.000	1.000	1.000	1.000
		In Fifth		0.854	0.854	0.854	0.854
		In Reverse		4.472	4.472	4.472	4.472
	Transfer Gear Ratio H4 / L4			—	—	—	—
	Differential Gear Ratio (Front / Rear)			— / 4.100	— / 4.100	— / 4.100	— / 4.555
	Differential Gear Size (Front / Rear)		in.	— / 8.07	— / 8.07	— / 8.07	— / 8.07
	Brake Type	Front		Ventilated Disc	Ventilated Disc	Ventilated Disc	Ventilated Disc
		Rear		Leading-Trailing Drum	Leading-Trailing Drum	Leading-Trailing Drum	Leading-Trailing Drum
	Parking Brake Type			Leading-Trailing Drum	Leading-Trailing Drum	Leading-Trailing Drum	Leading-Trailing Drum
	Brake Booster Type and Size		in.	Tandem 8.5" + 8.5"	Tandem 8.5" + 8.5"	Single 10"	Tandem 8.5" + 8.5"
	Proportioning Valve Type			LSP and BV	LSP and BV	LSP and BV	LSP and BV
	Suspension Type	Front		Double Wishbone	Double Wishbone	Double Wishbone	Double Wishbone
		Rear		Leaf Spring, Rigid	Leaf Spring, Rigid	4-Link, Rigid	Leaf Spring, Rigid
	Stabilizer Bar	Front		Standard	Standard	Standard	Standard
		Rear		—	—	Standard	—
	Steering Gear Type			Rack and Pinion	Rack and Pinion	Rack and Pinion	Rack and Pinion
	Steering Gear Ratio (Overall)			25.82, 18.68*5	25.82, 18.68*5	18.68	25.82, 18.65*5
	Power Steering Type			Integral Type	Integral Type	Integral Type	Integral Type

*1: With Step Bumper
*2: With Snorkel Cleaner Air Duct
*3: With P195 / 70 R15 Tire
*5: With Power Steering
*6: Option
*7: Set Option with Cold Area Spec.

General Countries					
4-Door Van (Long)			4-Door Commuter		
Standard					
LH112R-RBMRS	LH112L-RBMRS	LH112R-RRMRS	LH114L-BFMRS	LH104L-BFMRS	LH114R-BRMRS
4900 (192.9), 4855 (191.1)*1	4900 (192.9), 4855 (191.1)*1	4900 (192.9), 4855 (191.1)*1	4900 (192.9)	4640 (182.7)	4900 (192.9)
1690 (66.5), 1745 (68.7)*2	1690 (66.5), 1745 (68.7)*2	1690 (66.5), 1745 (68.7)*2	1690 (66.5), 1745 (68.7)*2	1690 (66.5), 1745 (68.7)*2	1690 (66.5), 1745 (68.7)*2
1945 (76.6)	1945 (76.6)	1945 (76.6)	1935 (76.2)	1935 (76.2)	1935 (76.2)
2590 (102.0)	2590 (102.0)	2590 (102.0)	2590 (102.0)	2590 (102.0)	2590 (102.0)
1450 (57.1), 1465 (57.7)*2	1450 (57.1), 1465 (57.7)*2	1450 (57.1), 1465 (57.7)*2	1450 (57.1), 1465 (57.7)*3	1450 (57.1), 1465 (57.7)*3	1450 (57.1), 1465 (57.7)*3
1430 (56.3), 1445 (56.9)*2	1430 (56.3), 1445 (56.9)*2	1430 (56.3), 1445 (56.9)*2	1430 (56.3), 1445 (56.9)*3	1430 (56.3), 1445 (56.9)*3	1430 (56.3), 1445 (56.9)*3
980 (38.6)	980 (38.6)	1990 (78.3)	3480 (137.2)	3480 (137.2)	3480 (137.2)
1480 (58.3)	1480 (58.3)	1540 (60.6)	1540 (60.6)	1540 (60.6)	1540 (60.6)
1345 (53.0)	1345 (53.0)	1345 (53.0)	1335 (52.6)	1335 (52.6)	1335 (52.6)
2975 (117.1)	2975 (117.1)	1965 (77.4)	—	—	—
1540 (60.6)	1540 (60.6)	1540 (60.6)	—	—	—
1345 (53.0)	1345 (53.0)	1345 (53.0)	—	—	—
1155 (45.5)	1155 (45.5)	1155 (45.5)	1155 (45.5)	1155 (45.5)	1155 (45.5)
1155 (45.5), 1110 (43.7)*1	1155 (45.5), 1110 (43.7)*1	1155 (45.5), 1110 (43.7)*1	1155 (45.5)	1155 (45.5)	1155 (45.5)
180 (7.1)	180 (7.1)	180 (7.1)	180 (7.1)	180 (7.1)	180 (7.1)
19°	19°	19°	19°	19°	19°
18°	18°	18°	18°	18°	18°
930 - 965 (2050 - 2127)	935 - 970 (2061 - 2138)	945 - 980 (2083 - 2161)	965 - 1000 (2127 - 2205)	965 - 1000 (2127 - 2205)	980 - 1015 (2161 - 2238)
680 - 705 (1499 - 1554)	685 - 705 (1510 - 1554)	720 - 735 (1587 - 1620)	765 - 765 (1687 - 1687)	750 - 765 (1653 - 1687)	790 - 805 (1742 - 1775)
1610 - 1670 (3549 - 3682)	1615 - 1675 (3560 - 3693)	1665 - 1715 (3671 - 3781)	1730 - 1780 (3814 - 3924)	1715 - 1765 (3781 - 3891)	1770 - 1820 (3902 - 4012)
1280 - 1305 (2822 - 2877)	1285 - 1305 (2833 - 2877)	1300 - 1330 (2866 - 2932)	1015 - 1065 (2238 - 2348)	1215 - 1265 (2679 - 2789)	1220 - 1275 (2690 - 2811)
1295 - 1320 (2855 - 2910)	1295 - 1315 (2855 - 2899)	1270 - 1300 (2800 - 2866)	1585 - 1535 (3494 - 3384)	1485 - 1535 (3274 - 3384)	1525 - 1580 (3362 - 3483)
2600 (5732)	2600 (5732)	2600 (5732)	2600 (5732)	2750 (6063)	2800 (6173)
70 (15.4)	70 (15.4)	70 (15.4)	70 (15.4)	70 (15.4)	70 (15.4)
—	—	—	—	—	—
130 (80)	130 (80)	130 (80)	130 (80)	130 (80)	130 (80)
105 (65)	105 (65)	105 (65)	105 (65)	105 (65)	105 (65)
28 (17)	28 (17)	28 (17)	28 (17)	28 (17)	28 (17)
48 (30)	48 (30)	48 (30)	48 (30)	48 (30)	48 (30)
83 (51)	83 (51)	83 (51)	83 (51)	83 (51)	83 (51)
—	—	—	—	—	—
5.2 (17.1)	5.2 (17.1)	5.2 (17.1)	5.2 (17.1)	4.7 (15.4)	5.2 (17.1)
5.8 (19.0)	5.8 (19.0)	5.8 (19.0)	5.8 (19.0)	5.3 (17.4)	5.8 (19.0)
2L	2L	2L	2L	2L	2L
OHC, Belt Drive	OHC, Belt Drive	OHC, Belt Drive	OHC, Belt Drive	OHC, Belt Drive	OHC, Belt Drive
92 x 92 (3.62 x 3.62)	92 x 92 (3.62 x 3.62)	92 x 92 (3.62 x 3.62)	92 x 92 (3.62 x 3.62)	92 x 92 (3.62 x 3.62)	92 x 92 (3.62 x 3.62)
2446 (149.3)	2446 (149.3)	2446 (149.3)	2446 (149.3)	2446 (149.3)	2446 (149.3)
22.2 : 1	22.2 : 1	22.2 : 1	22.2 : 1	22.2 : 1	22.2 : 1
Distributor Type	Distributor Type	Distributor Type	Distributor Type	Distributor Type	Distributor Type
48 or more higher	48 or more higher	48 or more higher	48 or more higher	48 or more higher	48 or more higher
60 / 4000	60 / 4000	60 / 4000	60 / 4000	60 / 4000	60 / 4000
162 / 2400	162 / 2400	162 / 2400	162 / 2400	162 / 2400	162 / 2400
12-60, 12-55 x 2*6	12-60, 12-55 x 2*6, *7	12-60, 12-55 x 2*6	12-60, 12-55 x 2*6	12-60, 12-55 x 2*6, *7	12-60, 12-55 x 2*6
840	840, 960*9	840	840	840	840
2.0	2.0, 2.7*2	2.0	2.0, 2.7*7	2.0, 2.7*7	2.0
Dry, Single Plate, Diaphragm	Dry, Single Plate, Diaphragm	Dry, Single Plate, Diaphragm	Dry, Single Plate, Diaphragm	Dry, Single Plate, Diaphragm	Dry, Single Plate, Diaphragm
G55	G55	G55	G55	G55	G55
4.452	4.452	4.452	4.452	4.452	4.452
2.619	2.619	2.619	2.619	2.619	2.619
1.517	1.517	1.517	1.517	1.517	1.517
1.000	1.000	1.000	1.000	1.000	1.000
0.854	0.854	0.854	0.854	0.854	0.854
4.472	4.472	4.472	4.472	4.472	4.472
—	—	—	—	—	—
—/4.555	—/4.555	—/4.555	—/4.555	—/4.555	—/4.555
—/8.07	—/8.07	—/8.07	—/8.07	—/8.07	—/8.07
Ventilated Disc	Ventilated Disc	Ventilated Disc	Ventilated Disc	Ventilated Disc	Ventilated Disc
Leading-Trailing Drum	Leading-Trailing Drum	Leading-Trailing Drum	Leading-Trailing Drum	Leading-Trailing Drum	Leading-Trailing Drum
Leading-Trailing Drum	Leading-Trailing Drum	Leading-Trailing Drum	Leading-Trailing Drum	Leading-Trailing Drum	Leading-Trailing Drum
Tandem 8.5" + 8.5"	Tandem 8.5" + 8.5"	Tandem 8.5" + 8.5"	Single 10"	Single 10"	Single 10"
LSP and BV	LSP and BV	LSP and BV	LSP and BV	LSP and BV	LSP and BV
Double Wishbone	Double Wishbone	Double Wishbone	Double Wishbone	Double Wishbone	Double Wishbone
Leaf Spring, Rigid	Leaf Spring, Rigid	Leaf Spring, Rigid	Leaf Spring, Rigid	Leaf Spring, Rigid	Leaf Spring, Rigid
Standard	Standard	Standard	Standard	Standard	Standard
—	—	—	—	—	—
Rack and Pinion	Rack and Pinion	Rack and Pinion	Rack and Pinion	Rack and Pinion	Rack and Pinion
25.82, 18.68*5	25.82, 18.68*5	25.82, 18.68*5	25.82, 18.68*5	25.82, 18.68*5	25.82, 18.68*5
Integral Type	Integral Type	Integral Type	Integral Type	Integral Type	Integral Type

Item \ Area				General Countries			
Body Type				4-Door Commuter	5-Door Van (Standard)		
Vehicle Grade				Standard			
Model Code				LH114L-BRMRS	LH162R-SBMRS	LH162R-SRMRS	LH162R-SRPRS
Major Dimensions & Vehicle Weights	Overall	Length	mm (in.)	4900 (192.9)	4640 (182.7), 4595 (180.9)*1	4640 (182.7), 4595 (180.9)*1	4640 (182.7), 4595 (180.9)*1
		Width	mm (in.)	1690 (66.5), 1745 (68.7)*2	1690 (66.5), 1745 (68.7)*2	1690 (66.5), 1745 (68.7)*2	1690 (66.5), 1745 (68.7)*2
		Height	mm (in.)	1935 (76.2)	1945 (76.6)	1945 (76.6)	1945 (76.6)
	Wheel Base		mm (in.)	2590 (102.0)	2330 (91.7)	2330 (91.7)	2330 (91.7)
	Tread	Front	mm (in.)	1450 (57.1), 1465 (57.7)*3	1450 (57.1), 1465 (57.7)*3	1450 (57.1), 1465 (57.7)*3	1450 (57.1), 1465 (57.7)*3
		Rear	mm (in.)	1430 (56.3), 1445 (56.9)*3	1430 (56.3), 1445 (56.9)*3	1430 (56.3), 1445 (56.9)*3	1430 (56.3), 1445 (56.9)*3
	Room	Length	mm (in.)	3480 (137.2)	980 (38.6)	1990 (78.3)	1990 (78.3)
		Width	mm (in.)	1540 (60.6)	1480 (58.3)	1540 (60.6)	1540 (60.6)
		Height	mm (in.)	1335 (52.6)	1345 (53.0)	1345 (53.0)	1345 (53.0)
	Cargo Space	Length	mm (in.)	—	2715 (106.9)	1705 (67.1)	1705 (67.1)
		Width	mm (in.)	—	1540 (60.6)	1540 (60.6)	1540 (60.6)
		Height	mm (in.)	—	1345 (53.0)	1345 (53.0)	1345 (53.0)
	Overhang	Front	mm (in.)	1155 (45.5)	1155 (45.5)	1155 (45.5)	1155 (45.5)
		Rear	mm (in.)	1155 (45.5)	1155 (45.5), 1110 (43.7)*1	1155 (45.5), 1110 (43.7)*1	1155 (45.5), 1110 (43.7)*1
	Min. Running Ground Clearance		mm (in.)	180 (7.1)	180 (7.1)	180 (7.1)	180 (7.1)
	Angle of Approach		degrees	19°	19°	19°	19°
	Angle of Departure		degrees	18°	18°	18°	18°
	Curb Weight	Front	kg (lb)	980 - 1015 (2161 - 2238)	930 - 965 (2050 - 2127)	945 - 980 (2083 - 2161)	895 - 960 (1973 - 2116)
		Rear	kg (lb)	790 - 805 (1742 - 1775)	680 - 705 (1499 - 1554)	715 - 735 (1576 - 1620)	705 - 725 (1554 - 1598)
		Total	kg (lb)	1770 - 1820 (3902 - 4012)	1610 - 1670 (3549 - 3682)	1660 - 1715 (3660 - 3781)	1600 - 1685 (3527 - 3715)
	Gross Vehicle Weight	Front	kg (lb)	1305 - 1360 (2877 - 2998)	1235 - 1265 (2723 - 2789)	1225 - 1255 (2701 - 2767)	1180 - 1245 (2601 - 2745)
		Rear	kg (lb)	1610 - 1665 (3549 - 3671)	1235 - 1265 (2723 - 2789)	1225 - 1275 (2701 - 2811)	1450 - 1520 (3197 - 3351)
		Total	kg (lb)	2970 (6548)	2500 (5512)	2500 (5512)	2700 (5952)
	Fuel Tank Capacity		ℓ (Imp. gal.)	70 (15.4)	70 (15.4)	70 (15.4)	70 (15.4)
	Luggage Compartment Capacity		m^3 (cu.ft.)	—	—	—	—
Performance	Max. Speed		km / h (mph)	130 (80)	135 (84)	135 (84)	130 (81)
	Max. Cruising Speed		km / h (mph)	105 (65)	—	—	—
	Max. Permissible Speed	1st Gear	km / h (mph)	28 (17)	30 (19)	30 (19)	38 (24)
		2nd Gear	km / h (mph)	48 (30)	51 (32)	51 (32)	73 (45)
		3rd Gear	km / h (mph)	83 (51)	87 (54)	87 (54)	—
		4th Gear	km / h (mph)	—	—	—	—
	Min. Turning Radius	Tire	m (ft.)	5.2 (17.1)	4.7 (15.4)	4.7 (15.4)	4.7 (15.4)
		Body	m (ft.)	5.8 (19.0)	5.3 (17.4)	5.3 (17.4)	5.3 (17.4)
Engine	Engine Type			2L	5L	5L	5L
	Valve Mechanism			OHC, Belt Drive	OHC, Belt Drive	OHC, Belt Drive	OHC, Belt Drive
	Bore x Stroke		mm (in.)	92 x 92 (3.62 x 3.62)	99.5 x 96 (3.91 x 3.78)	99.5 x 96 (3.91 x 3.78)	99.5 x 96 (3.91 x 3.78)
	Displacement		cm^3 (cu.in.)	2446 (149.3)	2986 (117.6)	2986 (117.6)	2986 (117.6)
	Compression Ratio			22.2 : 1	22.2 : 1	22.2 : 1	22.2 : 1
	Carburetor Type or Injection Pump Type (Diesel)			Distributor Type	Distributor Type	Distributor Type	Distributor Type
	Research Octane No. or Cetane No. (Diesel)			48 or more higher	48 or more higher	48 or more higher	48 or more higher
	Max. Output (EEC)		kW / rpm	60 / 4000	66 / 4000	66 / 4000	66 / 4000
	Max. Torque (EEC)		N·m / rpm	162 / 2400	192 / 2400	192 / 2400	192 / 2400
Engine Electrical	Battery Capacity (5HR)		Voltage & Amp. hr.	12-64, 12-55 x 2*6	12-64, 12-55 x 2*6	12-64, 12-55 x 2*6	12-64, 12-55 x 2*6
	Alternator Output		Watts	840	960	960	960
	Starter Output		kW	2.0, 2.7*7	2.0	2.0	2.7
Chassis	Clutch Type			Dry, Single Plate, Diaphragm	Dry, Single Plate, Diaphragm	Dry, Single Plate, Diaphragm	—
	Transmission Type			G55	G55	G55	A45DL
	Transmission Gear Ratio	In First		4.452	4.452	4.452	2.826
		In Second		2.619	2.619	2.619	1.493
		In Third		1.517	1.517	1.517	1.000
		In Fourth		1.000	1.000	1.000	0.730
		In Fifth		0.854	0.854	0.854	—
		In Reverse		4.472	4.472	4.472	2.730
	Transfer Gear Ratio H4 / L4			—	—	—	—
	Differential Gear Ratio (Front / Rear)			— / 4.555	— / 4.300	— / 4.300	— / 4.875
	Differential Gear Size (Front / Rear)		in.	— / 8.07	— / 8.07	— / 8.07	— / 8.07
	Brake Type	Front		Ventilated Disc	Ventilated Disc	Ventilated Disc	Ventilated Disc
		Rear		Leading-Trailing Drum	Leading-Trailing Drum	Leading-Trailing Drum	Leading-Trailing Drum
	Parking Brake Type			Leading-Trailing Drum	Leading-Trailing Drum	Leading-Trailing Drum	Leading-Trailing Drum
	Brake Booster Type and Size		in.	Single 10”	Single 10”	Single 10”	Single 10”
	Proportioning Valve Type			LSP and BV	LSP and BV	LSP and BV	LSP and BV
	Suspension Type	Front		Double Wishbone	Double Wishbone	Double Wishbone	Double Wishbone
		Rear		Leaf Spring, Rigid	Leaf Spring, Rigid	Leaf Spring, Rigid	Leaf Spring, Rigid
	Stabilizer Bar	Front		Standard	Standard	Standard	Standard
		Rear		—	—	—	—
	Steering Gear Type			Rack and Pinion	Rack and Pinion	Rack and Pinion	Rack and Pinion
	Steering Gear Ratio (Overall)			25.82, 18.68*5	25.82, 18.68*5	25.82, 18.68*5	18.68
	Power Steering Type			Integral Type	Integral Type	Integral Type	Integral Type

*1: With Step Bumper
*2: With Snorkel Cleaner Air Duct
*3: With P195 / 70 R15 Tire
*5: With Power Steering
*6: Option
*7: Set Option with Cold Area Spec.

General Countries					
4-Door Van (Long)					5-Door Van (Long)
Standard			GL	Standard	
LH172R-RBMRS	LH172L-RBMRS	LH172R-EBMRS	LH172R-RBMNS	LH172R-RRMRS	LH172R-SBMRS
4900 (192.9), 4855 (191.1)*1	4900 (192.9), 4855 (191.1)*1	4900 (192.9), 4855 (191.1)*1	4950 (194.9)	4900 (192.9), 4855 (191.1)*1	4900 (192.9), 4855 (191.1)*1
1690 (66.5), 1745 (68.7)*2	1690 (66.5), 1745 (68.7)*2	1690 (66.5), 1745 (68.7)*2	1690 (66.5)	1690 (66.5), 1745 (68.7)*2	1690 (66.5), 1745 (68.7)
1945 (76.6)	1945 (76.6)	2225 (87.6)	1945 (76.6)	1945 (76.6)	1945 (76.6)
2590 (102.0)	2590 (102.0)	2590 (102.0)	2590 (102.0)	2590 (102.0)	2590 (102.0)
1450 (57.1), 1465 (57.7)*2	1450 (57.1), 1465 (57.7)*2	1450 (57.1), 1465 (57.7)*3	1450 (57.1), 1465 (57.7)*3	1450 (57.1), 1465 (57.7)*3	1450 (57.1), 1465 (57.7)*3
1430 (56.3), 1445 (56.9)*2	1430 (56.3), 1445 (56.9)*2	1430 (56.3), 1445 (56.9)*3	1430 (56.3), 1445 (56.9)*3	1430 (56.3), 1445 (56.9)*3	1430 (56.3), 1445 (56.9)*3
980 (38.6)	980 (38.6)	980 (38.6)	980 (38.6)	1990 (78.3)	980 (38.6)
1480 (58.3)	1480 (58.3)	1480 (58.3)	1480 (58.3)	1540 (60.6)	1480 (58.3)
1345 (53.0)	1345 (53.0)	1605 (63.2)	1345 (53.0)	1345 (53.0)	1345 (53.0)
2975 (117.1)	2975 (117.1)	2975 (117.1)	2975 (117.1)	1965 (77.4)	2975 (117.1)
1540 (60.6)	1540 (60.6)	1540 (60.6)	1540 (60.6)	1540 (60.6)	1540 (60.6)
1345 (53.0)	1345 (53.0)	1605 (63.2)	1345 (53.0)	1345 (53.0)	1345 (53.0)
1155 (45.5)	1155 (45.5)	1155 (45.5)	1205 (47.4)	1155 (45.5)	1155 (45.5)
1155 (45.5), 1110 (43.7)*1	1155 (45.5), 1110 (43.7)*1	1155 (45.5), 1110 (43.7)*1	1155 (45.5)	1155 (45.5), 1110 (43.7)*1	1155 (45.5), 1110 (43.7)*1
180 (7.1)	180 (7.1)	180 (7.1)	180 (7.1)	180 (7.1)	180 (7.1)
19°	19°	19°	18°	19°	19°
18°	18°	18°	18°	18°	18°
940 - 975 (2072 - 2150)	945 - 980 (2083 - 2161)	940 - 975 (2072 - 2150)	925 - 1000 (2039 - 2205)	955 - 990 (2105 - 2183)	945 - 980 (2083 - 2161)
685 - 710 (1510 - 1565)	685 - 710 (1510 - 1565)	715 - 740 (1576 - 1631)	675 - 700 (1488 - 1543)	725 - 740 (1598 - 1631)	695 - 720 (1532 - 1587)
1625 - 1685 (3583 - 3715)	1630 - 1690 (3594 - 3726)	1655 - 1715 (3649 - 3781)	1600 - 1700 (3527 - 3748)	1680 - 1730 (3704 - 3814)	1640 - 1700 (3616 - 3748)
1285 - 1310 (2833 - 2888)	1290 - 1315 (2844 - 2899)	1280 - 1305 (2822 - 2877)	1275 - 1335 (2811 - 2943)	1275 - 1320 (2811 - 2910)	1290 - 1315 (2844 - 2899)
1290 - 1315 (2844 - 2899)	1285 - 1310 (2833 - 2888)	1295 - 1320 (2855 - 2910)	1265 - 1325 (2789 - 2921)	1280 - 1300 (2822 - 2866)	1310 - 1285 (2888 - 2833)
2600 (5732)	2600 (5732)	2600 (5732)	2600 (5732)	2600 (5732)	2600 (5732)
70 (15.4)	70 (15.4)	70 (15.4)	70 (15.4)	70 (15.4)	70 (15.4)
—	—	—	—	—	—
135 (84)	135 (84)	135 (84)	135 (84)	135 (84)	135 (84)
—	—	—	—	—	—
30 (19)	30 (19)	30 (19)	30 (19)	51 (32)	30 (19)
51 (32)	51 (32)	51 (32)	51 (32)	87 (54)	51 (32)
87 (54)	87 (54)	87 (57)	87 (54)	—	87 (54)
—	—	—	—	—	—
5.2 (17.1)	5.2 (17.1)	4.7 (15.4)	5.2 (17.1)	5.2 (17.1)	5.2 (17.1)
5.8 (19.0)	5.8 (19.0)	5.3 (17.4)	5.8 (19.0)	5.8 (19.0)	5.8 (19.0)
5L	5L	5L	5L	5L	5L
OHC, Belt Drive	OHC, Belt Drive	OHC, Belt Drive	OHC, Belt Drive	OHC, Belt Drive	OHC, Belt Drive
99.5 x 96 (3.91 x 3.78)	99.5 x 96 (3.91 x 3.78)	99.5 x 96 (3.91 x 3.78)	99.5 x 96 (3.91 x 3.78)	99.5 x 96 (3.91 x 3.78)	99.5 x 96 (3.91 x 3.78)
2986 (117.6)	2986 (117.6)	2986 (117.6)	2986 (117.6)	2986 (117.6)	2986 (117.6)
22.2 : 1	22.2 : 1	22.2 : 1	22.2 : 1	22.2 : 1	22.2 : 1
Distributor Type	Distributor Type	Distributor Type	Distributor Type	Distributor Type	Distributor Type
48 or more higher	48 or more higher	48 or more higher	48 or more higher	48 or more higher	48 or more higher
66 / 4000	66 / 4000	66 / 4000	66 / 4000	66 / 4000	66 / 4000
192 / 2400	192 / 2400	192 / 2400	192 / 2400	192 / 2400	192 / 2400
12-64	12-64, 12-55 x 2*6, *7	12-64, 12-55 x 2*6	12-64, 12-55 x 2*6	12-64, 12-55 x 2*6	12-64, 12-55 x 2*6
960	960	960	960	960	960
2.2	2.2, 2.7*2	2.2	2.2	2.2	2.2
Dry, Single Plate, Diaphragm	Dry, Single Plate, Diaphragm	Dry, Single Plate, Diaphragm	Dry, Single Plate, Diaphragm	Dry, Single Plate, Diaphragm	Dry, Single Plate, Diaphragm
G55	G55	G55	G55	G55	G55
4.452	4.452	4.452	4.452	4.452	4.452
2.619	2.619	2.619	2.619	2.619	2.619
1.517	1.517	1.517	1.517	1.517	1.517
1.000	1.000	1.000	1.000	1.000	1.000
0.854	0.854	0.854	0.854	0.854	0.854
4.472	4.472	4.472	4.472	4.472	4.472
—	—	—	—	—	—
—/4.300	—/4.300	—/4.300	—/4.300	—/4.300	—/4.300
—/8.07	—/8.07	—/8.07	—/8.07	—/8.07	—/8.07
Ventilated Disc	Ventilated Disc	Ventilated Disc	Ventilated Disc	Ventilated Disc	Ventilated Disc
Leading-Trailing Drum	Leading-Trailing Drum	Leading-Trailing Drum	Leading-Trailing Drum	Leading-Trailing Drum	Leading-Trailing Drum
Leading-Trailing Drum	Leading-Trailing Drum	Leading-Trailing Drum	Leading-Trailing Drum	Leading-Trailing Drum	Leading-Trailing Drum
Tandem 8.5" + 8.5"	Tandem 8.5" + 8.5"	Tandem 8.5" + 8.5"	Single 10"	Tandem 8.5" + 8.5"	Single 10"
LSP and BV	LSP and BV	LSP and BV	LSP and BV	LSP and BV	LSP and BV
Double Wishbone	Double Wishbone	Double Wishbone	Double Wishbone	Double Wishbone	Double Wishbone
Leaf Spring, Rigid	Leaf Spring, Rigid	Leaf Spring, Rigid	Leaf Spring, Rigid	Leaf Spring, Rigid	Leaf Spring, Rigid
Standard	Standard	Standard	Standard	Standard	Standard
—	—	—	—	—	—
Rack and Pinion	Rack and Pinion	Rack and Pinion	Rack and Pinion	Rack and Pinion	Rack and Pinion
25.82, 18.68*5	25.82, 18.68*5	25.82, 18.68*5	18.68	25.82, 18.68*5	25.82, 18.68*5
Integral Type	Integral Type	Integral Type	Integral Type	Integral Type	Integral Type

Item \ Area				General Countries			
Body Type				5-Door Van (Long)		4-Door Commuter	
Vehicle Grade				Standard		GL	
Model Code				LH172L-SBMRS	LH172R-SRMRS	LH154L-BFMQS	LH154L-BFMGS
Major Dimensions & Vehicle Weights	Overall	Length	mm (in.)	4900 (192.9)	4900 (192.9), 4855 (191.1)*1	4950 (194.9)	4950 (194.9)
		Width	mm (in.)	1690 (66.5), 1745 (68.7)	1690 (66.5), 1745 (68.7)	1690 (66.5), 1745 (68.7)*2	1690 (66.5), 1745 (68.7)*2
		Height	mm (in.)	1945 (76.6)	1945 (76.6)	1935 (76.2)	1935 (76.2)
	Wheel Base		mm (in.)	2590 (102.0)	2590 (102.0)	2590 (102.0)	2590 (102.0)
	Tread	Front	mm (in.)	1450 (57.1), 1465 (57.7)*3	1450 (57.1), 1465 (57.7)*3	1465 (57.7)	1465 (57.7)
		Rear	mm (in.)	1430 (56.3), 1445 (56.9)*3	1430 (56.3), 1445 (56.9)*3	1445 (56.9)	1445 (56.9)
	Room	Length	mm (in.)	980 (38.6)	1990 (78.3)	3865 (152.2)	3865 (152.2)
		Width	mm (in.)	1480 (58.3)	1540 (60.6)	1335 (52.6)	1335 (52.6)
		Height	mm (in.)	1345 (53.0)	1345 (53.0)	—	—
	Cargo Space	Length	mm (in.)	2975 (117.1)	1965 (77.4)	—	—
		Width	mm (in.)	1540 (60.6)	1540 (60.6)	—	—
		Height	mm (in.)	1345 (53.0)	1345 (53.0)	—	—
	Overhang	Front	mm (in.)	1155 (45.5)	1155 (45.5)	1205 (47.4)	1205 (47.4)
		Rear	mm (in.)	1155 (45.5)	1155 (45.5), 1110 (43.7)*1	1155 (45.5)	1155 (45.5)
	Min. Running Ground Clearance		mm (in.)	180 (7.1)	180 (7.1)	180 (7.1)	180 (7.1)
	Angle of Approach		degrees	19°	19°	19°	19°
	Angle of Departure		degrees	18°	18°	18°	18°
	Curb Weight	Front	kg (lb)	950 - 985 (2094 - 2172)	905 - 970 (1995 - 2138)	1020 - 1025 (2249 - 2260)	1020 - 1025 (2249 - 2260)
		Rear	kg (lb)	695 - 720 (1532 - 1587)	720 - 740 (1587 - 1631)	870 - 880 (1918 - 1940)	840 - 850 (1852 - 1874)
		Total	kg (lb)	1645 - 1705 (3627 - 3759)	1625 - 1710 (3583 - 3770)	1890 - 1905 (4167 - 4200)	1860 - 1875 (4101 - 4134)
	Gross Vehicle Weight	Front	kg (lb)	1295 - 1315 (2855 - 2899)	1240 - 1305 (2734 - 2877)	1095 - 1170 (2414 - 2579)	1150 - 1230 (2535 - 2712)
		Rear	kg (lb)	1285 - 1305 (2833 - 2877)	1495 - 1560 (3296 - 3439)	1430 - 1505 (3153 - 3318)	1380 - 1450 (3042 - 3197)
		Total	kg (lb)	2600 (5732)	2800 (6173)	2600 (5732)	2600 (5732)
	Fuel Tank Capacity		ℓ (Imp. gal.)	70 (15.4)	70 (15.4)	70 (15.4)	70 (15.4)
	Luggage Compartment Capacity		m^3 (cu.ft.)	—	—	—	—
Performance	Max. Speed		km/h (mph)	135 (84)	135 (84)	135 (84)	135 (84)
	Max. Cruising Speed		km/h (mph)	—	—	—	—
	Max. Permissible Speed	1st Gear	km/h (mph)	30 (19)	30 (19)	30 (19)	30 (19)
		2nd Gear	km/h (mph)	51 (32)	51 (32)	51 (32)	51 (32)
		3rd Gear	km/h (mph)	87 (54)	87 (54)	87 (54)	87 (54)
		4th Gear	km/h (mph)	—	—	—	—
	Min. Turning Radius	Tire	m (ft.)	5.2 (17.1)	5.2 (17.1)	5.2 (17.1)	5.2 (17.1)
		Body	m (ft.)	5.8 (19.0)	5.8 (19.0)	5.8 (19.0)	5.8 (19.0)
Engine	Engine Type			5L	5L	5L	5L
	Valve Mechanism			OHC, Belt Drive	OHC, Belt Drive	OHC, Belt Drive	OHC, Belt Drive
	Bore x Stroke		mm (in.)	99.5 x 96 (3.91 x 3.78)	99.5 x 96 (3.91 x 3.78)	99.5 x 96 (3.91 x 3.78)	99.5 x 96 (3.91 x 3.78)
	Displacement		cm^3 (cu.in.)	2986 (117.6)	2986 (117.6)	2986 (117.6)	2986 (117.6)
	Compression Ratio			22.2 : 1	22.2 : 1	22.2 : 1	22.2 : 1
	Carburetor Type or Injection Pump Type (Diesel)			Distributor Type	Distributor Type	Distributor Type	Distributor Type
	Research Octane No. or Cetane No. (Diesel)			48 or more higher	48 or more higher	48 or more higher	48 or more higher
	Max. Output (EEC)		kW/rpm	66/4000	66/4000	66/4000	66/4000
	Max. Torque (EEC)		N·m/rpm	192/2400	192/2400	192/2400	192/2400
Engine Electrical	Battery Capacity (5HR)		Voltage & Amp. hr.	12-64, 12-55 x 2*6	12-64, 12-55 x 2*6	12-64, 12-55 x 2*6	12-64, 12-55 x 2*6
	Alternator Output		Watts	960	960	960	960
	Starter Output		kW	2.2, 2.7*7	2.2	2.2	2.2
Chassis	Clutch Type			Dry, Single Plate, Diaphragm	Dry, Single Plate, Diaphragm	Dry, Single Plate, Diaphragm	Dry, Single Plate, Diaphragm
	Transmission Type			G55	G55	G55	G55
	Transmission Gear Ratio	In First		4.452	4.452	4.452	4.452
		In Second		2.619	2.619	2.619	2.619
		In Third		1.517	1.517	1.517	1.517
		In Fourth		1.000	1.000	1.000	1.000
		In Fifth		0.854	0.854	0.854	0.854
		In Reverse		4.472	4.472	4.472	4.472
	Transfer Gear Ratio H4/L4			—	—	—	—
	Differential Gear Ratio (Front/Rear)			—/4.300	—/4.300	—/4.300	—/4.300
	Differential Gear Size (Front/Rear)		in.	—/8.07	—/8.07	—/8.07	—/8.07
	Brake Type	Front		Ventilated Disc	Ventilated Disc	Ventilated Disc	Ventilated Disc
		Rear		Leading-Trailing Drum	Leading-Trailing Drum	Leading-Trailing Drum	Leading-Trailing Drum
	Parking Brake Type			Leading-Trailing Drum	Leading-Trailing Drum	Leading-Trailing Drum	Leading-Trailing Drum
	Brake Booster Type and Size		in.	Single 10"	Single 10"	Single 10"	Single 10"
	Proportioning Valve Type			LSP and BV	LSP and BV	LSP and BV	LSP and BV
	Suspension Type	Front		Double Wishbone	Double Wishbone	Double Wishbone	Double Wishbone
		Rear		Leaf Spring, Rigid	Leaf Spring, Rigid	4-Link, Rigid	4-Link, Rigid
	Stabilizer Bar	Front		Standard	Standard	Standard	Standard
		Rear		—	—	—	—
	Steering Gear Type			Rack and Pinion	Rack and Pinion	Rack and Pinion	Rack and Pinion
	Steering Gear Ratio (Overall)			25.82, 18.68*5	25.82, 18.68*5	18.68	18.68
	Power Steering Type			Integral Type	Integral Type	Integral Type	Integral Type

*1: With Step Bumper
*2: With Snorkel Cleaner Air Duct
*3: With P195/70 R15 Tire
*5: With Power Steering
*6: Option
*7: Set Option with Cold Area Spec.
*10: With Egypt

	General Countries					
	4-Door Commuter					4-Door Van (Long)
	Standard			GL		Standard
	LH174R-BRMRS	LH174L-BRMRS	LH174R-ZRMRS	LH184R-JRMNS	LH184R-ZRMNS	LH172R-RRMRE
	4900 (192.9)	4900 (192.9)	4900 (192.9)	5250 (206.7)	5250 (206.7)	4900 (192.9), 4855 (191.1)*1
	1690 (66.5), 1745 (68.7)*2	1690 (66.5), 1745 (68.7)*2	1690 (66.5), 1745 (68.7)*2	1690 (66.5)	1690 (66.5)	1690 (66.5), 1745 (68.7)*2
	1935 (76.2)	1935 (76.2)	222.5 (87.6)	1970 (77.6)	1970 (77.6)	1945 (76.6)
	2590 (102.0)	2590 (102.0)	2590 (102.0)	1970 (77.6)	1970 (77.6)	2590 (102.0)
	1450 (57.1), 1465 (57.7)*3	1450 (57.1), 1465 (57.7)*3	1450 (57.1), 1465 (57.7)*3	1465 (57.7)	1465 (57.7)	1450 (57.1), 1465 (57.7)*3
	1430 (56.3), 1445 (56.9)*3	1430 (56.3), 1445 (56.9)*3	1430 (56.3), 1445 (56.9)*3	1445 (56.9)	1445 (56.9)	1430 (56.3), 1445 (56.9)*3
	3865 (52.2)	3865 (52.2)	3865 (152.2)	4120 (162.2)	4120 (162.2)	1990 (78.3)
	1540 (60.6)	1540 (60.6)	1540 (60.6)	1335 (52.6)	1335 (52.6)	1540 (60.6)
	1335 (52.6)	1335 (52.6)	1335 (52.6)	1605 (63.2)	1605 (63.2)	1345 (53.0)
	—	—	—	—	—	1965 (77.4)
	—	—	—	—	—	1540 (60.6)
	—	—	—	—	—	1345 (53.0)
	1155 (45.5)	1155 (45.5)	1155 (45.5)	1205 (47.4)	1205 (47.4)	1155 (45.5)
	1155 (45.5)	1155 (45.5)	1155 (45.5)	1155 (45.5)	1155 (45.5)	1155 (45.5), 1110 (43.7)*1
	180 (7.1)	180 (7.1)	180 (7.1)	180 (7.1)	180 (7.1)	180 (7.1)
	19°	19°	19°	19°	19°	19°
	18°	18°	18°	18°	18°	18°
	985 - 1020 (2172 - 2249)	990 - 1025 (2183 - 2260)	985 - 1020 (2172 - 2249)	990 - 1055 (2183 - 2326)	980 - 1045 (2161 - 2304)	990 - 1005 (2183 - 2216)
	795 - 810 (1753 - 1786)	795 - 810 (1753 - 1786)	825 - 840 (1819 - 1852)	850 - 855 (1874 - 1885)	860 - 865 (1896 - 1907)	710 - 730 (1565 - 1609)
	1780 - 1830 (3924 - 4034)	1785 - 1835 (3935 - 4045)	1810 - 1860 (3990 - 4101)	1840 - 1910 (4057 - 4211)	1840 - 1910 (4057 - 4211)	1700 - 1735 (3748 - 3825)
	1315 - 1370 (2899 - 3020)	1320 - 1375 (2910 - 3031)	1320 - 1375 (2910 - 3031)	1360 - 1445 (2998 - 3186)	1350 - 1435 (2976 - 3164)	1325 - 1335 (2921 - 2943)
	1600 - 1655 (3527 - 3649)	1595 - 1650 (3516 - 3638)	1615 - 1670 (3560 - 3682)	1605 - 1690 (3538 - 3726)	1615 - 1700 (3560 - 3748)	1465 - 1475 (3230 - 3252)
	2970 (6548)	2970 (6548)	2970 (6548)	3050 (6724)	3050 (6724)	2800 (6173)
	70 (15.4)	70 (15.4)	70 (15.4)	70 (15.4)	70 (15.4)	70 (15.4)
	—	—	—	—	—	—
	135 (84)	135 (84)	135 (84)	135 (84)	135 (84)	135 (84)
	—	—	—	—	—	—
	30 (19)	30 (19)	30 (19)	30 (19)	30 (19)	56 (35)
	51 (32)	51 (32)	51 (32)	51 (32)	51 (32)	95 (59)
	87 (54)	87 (54)	87 (54)	87 (54)	87 (54)	—
	—	—	—	—	—	—
	5.2 (17.1)	5.2 (17.1)	5.2 (17.1)	5.7 (18.7)	5.7 (18.7)	5.2 (17.1)
	5.8 (19.0)	5.8 (19.0)	5.8 (19.0)	6.3 (20.7)	6.3 (20.7)	5.8 (19.0)
	5L	5L	5L	5L	5L	5L-E
	OHC, Belt Drive	OHC, Belt Drive	OHC, Belt Drive	OHC, Belt Drive	OHC, Belt Drive	OHC, Belt Drive
	99.5 x 96 (3.91 x 3.78)	99.5 x 96 (3.91 x 3.78)	99.5 x 96 (3.91 x 3.78)	99.5 x 96 (3.91 x 3.78)	99.5 x 96 (3.91 x 3.78)	99.5 x 96 (3.91 x 3.78)
	2986 (117.6)	2986 (117.6)	2986 (117.6)	2986 (117.6)	2986 (117.6)	2986 (117.6)
	22.2 : 1	22.2 : 1	22.2 : 1	22.2 : 1	22.2 : 1	22.2 : 1
	Distributor Type	Distributor Type	Distributor Type	Distributor Type	Distributor Type	Distributor Type
	48 or more higher	48 or more higher	48 or more higher	48 or more higher	48 or more higher	48 or more higher
	66 / 4000	66 / 4000, 62 / 4000*10	66 / 4000	66 / 4000	66 / 4000	66 / 4000
	192 / 2400	192 / 2400, 185 / 2400*10	192 / 2400	192 / 2400	192 / 2400	192 / 2400
	12-64, 12-55 x 2*6, *7	12-64, 12-55 x 2*6, *7	12-64, 12-55 x 2*6	12-64, 12-55 x 2*6	12-64, 12-55 x 2*6	12-64, 12-55*6
	960	960	960	960	960	960
	2.2	2.2	2.2	2.2	2.2	2.2
	Dry, Single Plate, Diaphragm	Dry, Single Plate, Diaphragm	Dry, Single Plate, Diaphragm	Dry, Single Plate, Diaphragm	Dry, Single Plate, Diaphragm	Dry, Single Plate, Diaphragm
	G55	G55	G55	G55	G55	G56
	4.452	4.452	4.452	4.452	4.452	4.452
	2.619	2.619	2.619	2.619	2.619	2.398
	1.517	1.517	1.517	1.517	1.517	1.414
	1.000	1.000	1.000	1.000	1.000	1.000
	0.854	0.854	0.854	0.854	0.854	0.854
	4.472	4.472	4.472	4.472	4.472	4.472
	—	—	—	—	—	—
	—/4.300	—/4.300	—/4.300	—/4.300	—/4.300	—/4.300
	—/8.07	—/8.07	—/8.07	—/8.07	—/8.07	—/8.07
	Ventilated Disc	Ventilated Disc	Ventilated Disc	Ventilated Disc	Ventilated Disc	Ventilated Disc
	Leading-Trailing Drum	Leading-Trailing Drum	Leading-Trailing Drum	Leading-Trailing Drum	Leading-Trailing Drum	Leading-Trailing Drum
	Leading-Trailing Drum	Leading-Trailing Drum	Leading-Trailing Drum	Leading-Trailing Drum	Leading-Trailing Drum	Leading-Trailing Drum
	Single 10”	Single 10”	Single 10”	Single 10”	Single 10”	Tandem 8.5” + 8.5”
	LSP and BV	LSP and BV	LSP and BV	LSP and BV	LSP and BV	LSP and BV
	Double Wishbone	Double Wishbone	Double Wishbone	Double Wishbone	Double Wishbone	Double Wishbone
	Leaf Spring, Rigid	Leaf Spring, Rigid	Leaf Spring, Rigid	Liaf Spring, Rigid	Liaf Spring, Rigid	Leaf Spring, Rigid
	Standard	Standard	Standard	Standard	Standard	Standard
	—	—	—	—	—	—
	Rack and Pinion	Rack and Pinion	Rack and Pinion	Rack and Pinion	Rack and Pinion	Rack and Pinion
	25.82, 18.68*5	25.82, 18.68*5	25.82, 18.68*5	18.68	18.68	25.82, 18.68*5
	Integral Type	Integral Type	Integral Type	Integral Type	Integral Type	Integral Type

Item \ Area				General Countries
Body Type				4-Door Van (Long)
Vehicle Grade				GL
Model Code				LH172R-RRMNE
Major Dimensions & Vehicle Weights	Overall	Length	mm (in.)	4950 (194.9)
		Width	mm (in.)	1690 (66.5), 1745 (68.7)*2
		Height	mm (in.)	1945 (76.6)
	Wheel Base		mm (in.)	2590 (102.0)
	Tread	Front	mm (in.)	1450 (57.1), 1465 (57.7)*3
		Rear	mm (in.)	1430 (56.3), 1445 (56.9)*3
	Room	Length	mm (in.)	1990 (78.3)
		Width	mm (in.)	1540 (60.6)
		Height	mm (in.)	1345 (53.0)
	Cargo Space	Length	mm (in.)	1965 (77.4)
		Width	mm (in.)	1540 (60.6)
		Height	mm (in.)	1345 (53.0)
	Overhang	Front	mm (in.)	1205 (47.4)
		Rear	mm (in.)	1155 (45.5)
	Min. Running Ground Clearance		mm (in.)	180 (7.1)
	Angle of Approach		degrees	18°
	Angle of Departure		degrees	18°
	Curb Weight	Front	kg (lb)	995 - 1010 (2194 - 2227)
		Rear	kg (lb)	710 - 730 (1565 - 1609)
		Total	kg (lb)	1705 - 1740 (3759 - 3836)
	Gross Vehicle Weight	Front	kg (lb)	1330 - 1340 (2932 - 2954)
		Rear	kg (lb)	1460 - 1470 (3219 - 3241)
		Total	kg (lb)	2800 (6173)
	Fuel Tank Capacity		ℓ (Imp. gal.)	70 (15.4)
	Luggage Compartment Capacity		m^3 (cu.ft.)	—
Performance	Max. Speed		km/h (mph)	135 (84)
	Max. Cruising Speed		km/h (mph)	—
	Max. Permissible Speed	1st Gear	km/h (mph)	30 (18)
		2nd Gear	km/h (mph)	56 (35)
		3rd Gear	km/h (mph)	95 (59)
		4th Gear	km/h (mph)	—
	Min. Turning Radius	Tire	m (ft.)	5.2 (17.1)
		Body	m (ft.)	5.8 (19.0)
Engine	Engine Type			5L-E
	Valve Mechanism			OHC, Belt Drive
	Bore x Stroke		mm (in.)	99.5 x 96 (3.91 x 3.78)
	Displacement		cm^3 (cu.in.)	2986 (117.6)
	Compression Ratio			22.2 : 1
	Carburetor Type or Injection Pump Type (Diesel)			Distributor Type
	Research Octane No. or Cetane No. (Diesel)			48 or more higher
	Max. Output (EEC)		kW/rpm	66/4000
	Max. Torque (EEC)		N·m/rpm	192/2400
Engine Electrical	Battery Capacity (5HR)		Voltage & Amp. hr.	12-64, 12-55 x 2*6
	Alternator Output		Watts	960
	Starter Output		kW	2.2
Chassis	Clutch Type			Dry, Single Plate, Diaphragm
	Transmission Type			G56
	Transmission Gear Ratio	In First		4.452
		In Second		2.398
		In Third		1.414
		In Fourth		1.000
		In Fifth		0.854
		In Reverse		4.472
	Transfer Gear Ratio H4/L4			—
	Differential Gear Ratio (Front/Rear)			—/4.300
	Differential Gear Size (Front/Rear)		in.	—/8.07
	Brake Type	Front		Ventilated Disc
		Rear		Leading-Trailing Drum
	Parking Brake Type			Leading-Trailing Drum
	Brake Booster Type and Size		in.	Single 10"
	Proportioning Valve Type			LSP and BV
	Suspension Type	Front		Double Wishbone
		Rear		Leaf Spring, Rigid
	Stabilizer Bar	Front		Standard
		Rear		—
	Steering Gear Type			Rack and Pinion
	Steering Gear Ratio (Overall)			25.82, 18.68*5
	Power Steering Type			Integral Type

*2: With Snorkel Cleaner Air Duct
*3: With P195/70 R15 Tire
*5: With Power Steering
*6: Option

RAV4

OUTLINE OF NEW FEATURES

The following changes are made for the new RAV4.

1. Model Line-up

The 1AZ-FE engine has been discontinued and the 2AZ-FE engine has been introduced on the model for Australia.

2. Exterior

- The designs of the front bumper and radiator grille have been changed.
- A large-diameter fog light has been newly provided at each end of the front bumper. Hole covers have been provided on the models without fog lights.
- The designs of the headlights have been changed.
- The outer lens color of the side turn-signal lights have been changed from amber to clear.
- The designs of the rear combination lights have been changed.
- The designs of the spare wheel cover have been changed.
- Windshield glass with shielding ceramic has been provided on all models.
- A defogger function has been provided on the back door glass of all models.
- The color of the privacy glass on the back door has been changed from dark green to cool green.
- The design of the aluminum disc wheels for the 215/70R16 and 235/60R16 tires has been changed.
- The following exterior colors have been added:

Added Color No.	Added Color Name
040	Super White II
4R4	Beige Metallic
3Q3	Dark Red Mica Metallic
6T6	Light Green Metallic
1E0	Dark Gray Mica
6R4	Dark Green Mica

3. Interior

- The designs of the meter cluster have been changed.
- The shapes of the center cluster have been changed.
- Soft-feel paint has been adopted in the instrument panel unit of the models for Europe.
- The designs of the shift knob have been changed.
- The designs of the steering wheel have been changed.
- The designs of the heater control panel have been changed.
- Steering pad switches for operating the audio system have been made available as optional equipment on the steering wheel of the models for Europe.
- The designs of the door assist grips have been changed.
- Key illumination has been provided as standard equipment on the models for the G.C.C. (Gulf Cooperation Council) countries and General Countries.
- The shape of the manual, glare-resistant inner mirror has been changed.
- The vanity mirror on the sun visor has been changed to a hard-case vanity mirror.
- A vanity light has been provided on the sun visor on the models for Europe.
- A room separator only for the rear section has been provided on the models for Europe equipped with curtain shield airbags. (This is available as a set option on the models with rear three-point seat belts.) For the models without curtain shield airbag, the room separator has been provided for the front side.

4. 1ZZ-FE Engine

SLLC (Super Long Life Coolant) has been newly adopted.

5. 1AZ-FE Engine

Unleaded gasoline model has been changed as follows.

- To improve fuel economy, the operating angle of the camshaft has been changed.
- A throttle body with a built-in link-less throttle position sensor has been adopted. Accordingly, an ETCS-i (Electronic Throttle Control System-intelligent) function has been adopted.
- The exhaust manifold has been changed from dual pipes to a single pipe.
- To comply with the exhaust emission regulations, the models for Europe and the G. C. C. countries have adopted an under floor catalyst.
- SLLC (Super Long Life Coolant) has been newly adopted.
- The models for Europe have adopted injectors with improved atomization of fuel in order to comply with the STEP IV exhaust emission regulations.
- The fuel tube on the models for Europe and the G.C.C. countries has been changed from the rubber tube joint to the quick connector joint type.
- The shape of the fuel tank of all models, except for the general export models, has been changed.
- The alternator of the automatic transaxle has been changed to a segment conductor type.
- A linear type accelerator pedal position sensor has been adopted.
- The cooling fan system on the models for Europe and the G.C.C. countries, which was controlled by the water temperature switch, has been changed to ECU control.
- The evaporative purge flow rate in the models for Europe and the G.C.C. countries has been changed.

6. 2AZ-FE Engine

- The 2AZ-FE engine has been newly adopted on the models for Australia.
- An under floor under floor catalyst has been adopted to comply with the STEP II. exhaust emission regulations.

7. 1CD-FTV Engine

- SLLC (Super Long Life Coolant) has been newly adopted.
- The fuel tube has been changed from the rubber tube joint to the quick connector joint type.
- The diagnosis system has been corresponded to the Euro-OBD (Europe On-Board Diagnosis) that complies with European regulation.

8. E350 Series Manual Transaxle

The gear ratio of the E350 series manual transaxle, which has been adopted with the respective engines, has been partially changed.

9. Automatic Transaxle

An ATF (Automatic Transmission Fluid) warmer has been newly adopted on the models with an automatic transaxle (this is unavailable on the models for the G.C.C. countries).

10. Suspension

- The damping characteristics of the No. 2 front lower arm bushing have been changed to attain a higher damping force.
- The linear control valve and the base valve of the front shock absorber have been changed to different-diameter laminated valves.
- The construction of the rear wheel bearing has been changed for weight reduction.

11. Brake

- A silent valve has been adopted in the solenoid in the ABS (Anti-lock Brake System) brake actuator in order to reduce the operating sound.
- The VSC (Vehicle Stability Control) system has been made available as optional equipment on the models for Europe and Australia. Models equipped with VSC are provided with the following functions: ABS with EBD (Electronic Brake Force Distribution), Brake Assist, and TRC (Traction Control) system.
- To control VSC, braking control has been adopted under the conditions in which the limitations of the tires are not exceeded.

12. Power Steering System

The shaft control valve characteristics of the power steering gear has been changed.

13. Body

- An energy absorbing reinforcement has been added in the head impact protection area of the roof panel.
- The return spring of the outside door handle has been strengthened to improve its operating feel.
- Impact energy absorbing pads have been provided in the dash area behind the floor carpet, in consideration of safety.
- The dash silencer and the door trims have been changed to a sound absorbing construction.
- A sound insulation material to reduce the sounds transmitted from the engine has been adopted in the instrument panel.

14. Seat

- Along with the adoption of the curtain shield airbags and side airbags, the construction of the seat frames, headrests, and the outer shields has been changed.
- CRS anchor brackets have been provided at the rear seats on Europe and Australia model.

15. Seat Belt

- The size of the buckle and the tongue of the seat belts for the front seats and the outer rear seats has been changed on all models.
- The buckle and the tongue of the 3-point seat belt for the rear center seat on the 5-door models for Europe and Australia have been changed.
- A no-contact type buckle switch for seatbelt warning has been adopted on the driver's seat of the models for Europe.
- The width of the webbing of the outer belt of the 3-point seat belt for the rear seats has been changed from 49 mm to 47 mm.
- The shoulder anchor slip joint for the outer rear seats on all models has been changed.
- The shape of the shoulder belt guide on the 3-door model has been changed to improve the ease of use.

16. Multiplex Communication

CAN (Controller Area Network) communication has been adopted for the brake control system on the models equipped with VSC.

17. Manual Headlight Beam Level Control System

A headlight leveling mechanism has been provided on the models for Saudi Arabia.

18. Combination Meter

The design and construction of combination meter has been changed.

19. Wiper System

The rubber blades of the front wipers now have surfaces coated with graphite. These rubber blades, which minimize the sound of the impact that is created when the wipers swing back, also offer a longer use life.

20. Air Conditioner

- An automatic air conditioner system has been made available as optional equipment on the models for Europe.
- The front blower motor has been changed to a compact and lightweight type.
- A defroster logic function, which positively introduces fresh air in the defroster mode in order to prevent the window from fogging, has been adopted on the models for Europe with a manual and automatic air conditioner system.

21. Automatic Glare-Resistant Inner Mirror

- An automatic glare-resistant inner mirror has been made available as optional equipment for all destinations.

22. Engine Immobilizer System

On the new RAV4 models, the transponder key ECU controls the engine immobilizer system by communicating with the engine ECU. Also the encoding of the ID in the ignition key and the ID stored in the transponder key ECU has been changed from the conventional fixed encoding to an encrypted encoding type. As a result, the theft deterrence performance has been improved.
(Except for the 1ZZ-FE engine for Europe models.)

23. SRS Airbag System

- A dual-stage SRS airbag system has been adopted for the driver's and front passenger airbags on the models for Europe. In this system, the deployment pressure of the airbags can be controlled in two stages.
- SRS side airbags and curtain shield airbags have been made available as optional equipment on the models for Europe, Australia, and the G.C.C. countries.

24. Cruise Control System

- Along with the adoption of ETCS-i (Electronic Throttle Control System-intelligent), the control of the cruise control system has been changed on the 1AZ-FE and 2AZ-FE engine models.
- The cruise control ECU has been integrated with the engine ECU.

25. Navigation System

The version of the navigation system has been updated with new functions.

26. Audio System

Steering pad switches have been made available as optional equipment on the models for Europe.

MODEL CODE

ACA21 L – A W M N K W

1 2 3 4 5 6 7 8

1 BASIC MODEL CODE

CODE	DRIVE TYPE	ENGINE
ACA20	4WD	1AZ-FE
ACA21		
ACA22		2AZ-FE
ACA23		
CLA20		1CD-FTV
CLA21		
ZCA25	2WD	1ZZ-FE
ZCA26		

2 STEERING WHEEL POSITION

L : Left-Hand Drive
R : Right-Hand Drive

3 MODEL NAME

A: RAV4

4 BODY TYPE

W: 5-Door Wagon
Z : 3-Door Wagon

5 GEAR SHIFT TYPE

M: 5-Speed Manual, Floor
P : 4-Speed Automatic, Floor

6 GRADE

N: —

7 ENGINE SPECIFICATION

K : DOHC and EFI
Y : Common-Rail Diesel

8 DESTINATION

W: Europe
Q : Australia
V : G.C.C. (Gulf Cooperation Council) Countries
Blank: General Countries

MODEL LINE-UP

DESTINATION	ENGINE	BODY TYPE	DRIVE TYPE	TRANSAXLE				
				5-Speed Manual			4-Speed Automatic	
				E352F	E353F	C54	E359F	U140F
Europe	1AZ-FE	3 Door	4WD	ACA20 R/L -AZMNKW	—	—	—	—
				—	—	—	—	ACA20 R/L -AWZNKW
		5 Door		ACA21 R/L -AWMNKW	—	—	—	—
				—	—	—	—	ACA21 R/L -AWPNKW
	1ZZ-FE	3 Door	2WD	—	—	ZCA25 R/L -AZMNKW	—	—
		5 Door		—	—	ZAC26 R/L -AWMNKW	—	—
	1CD-FTV	3 Door	4WD	—	CLA20 R/L -AZMNYW	—	—	—
		5 Door		—	CLA21 R/L -AWMNYW	—	—	—
Australia	2AZ-FE	3 Door	4WD	—	—	—	ACA22R -AZMNKQ	—
				—	—	—	—	ACA22R -AZPNKQ
		5 Door		—	—	—	ACA23R -AWMNKQ	—
				—	—	—	—	ACA23R -AWPNKQ
G.C.C. Countries	1AZ-FE	3 Door	4WD	—	—	—	—	ACA20L -AZPNKV
		5 Door		ACA21L -AWMNKV	—	—	—	—
				—	—	—	—	ACA21L -AWPNKV
General Countries	1AZ-FE	5 Door	4WD	ACA21 R/L -AWMNK	—	—	—	—
				—	—	—	—	ACA21 R/L -AWPNK

: NEW

NEW FEATURES

■EXTERIOR

1. Front View

- The front bumper gives the vehicle a wide and powerful look while maintaining a stylish shape.
- The front grille consists of a three-dimensional mesh pattern that is laid out above and below a bar located in the center of the grille. Thus, it gives the vehicle a sporty yet high quality exterior appearance.
- The headlights incorporate oval turn signal lights to achieve a sporty exterior look.
- A large-diameter, round fog light has been newly provided at each end of the front bumper to give the vehicle exterior an SUV-like appearance. Deep-dished hole covers have been provided on the models without the fog lights.

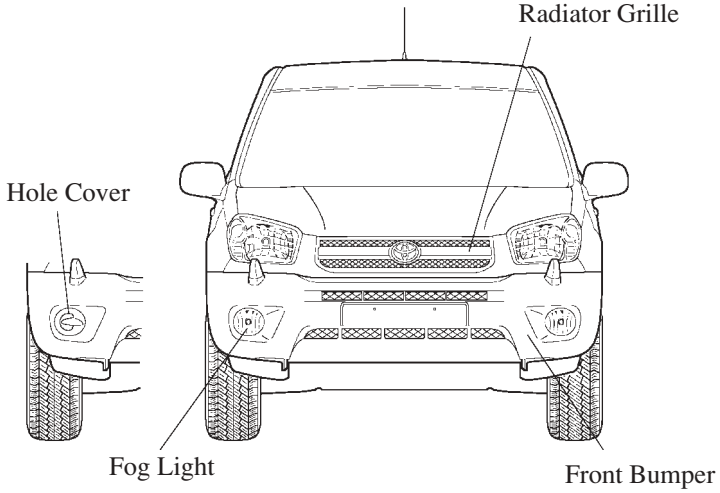

New RAV4

258RV02

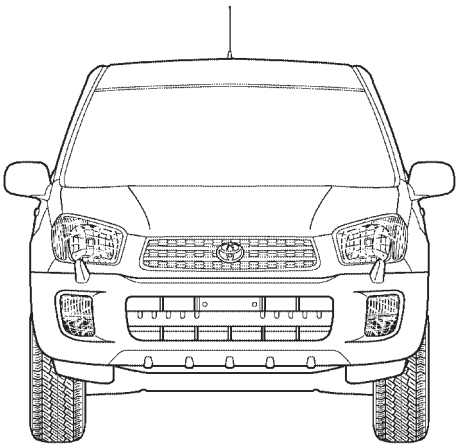

Previous RAV4

258RV03

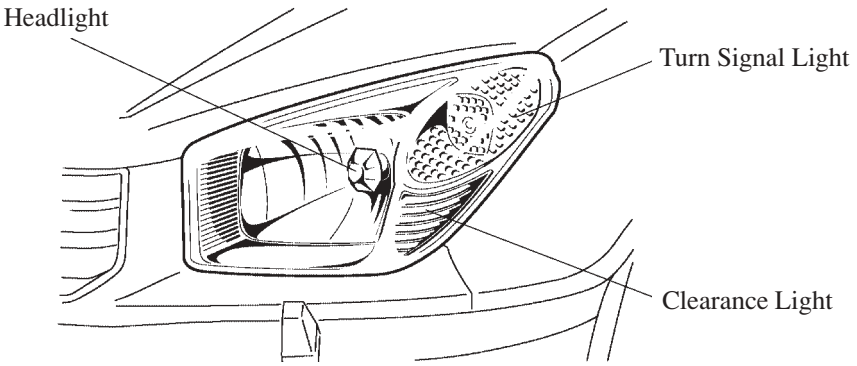

258RV04

2. Rear View

The rear combination lights with the cut lens surface have been discontinued. The new lights show the shape of the internal extensions in order to achieve a sportier exterior appearance.

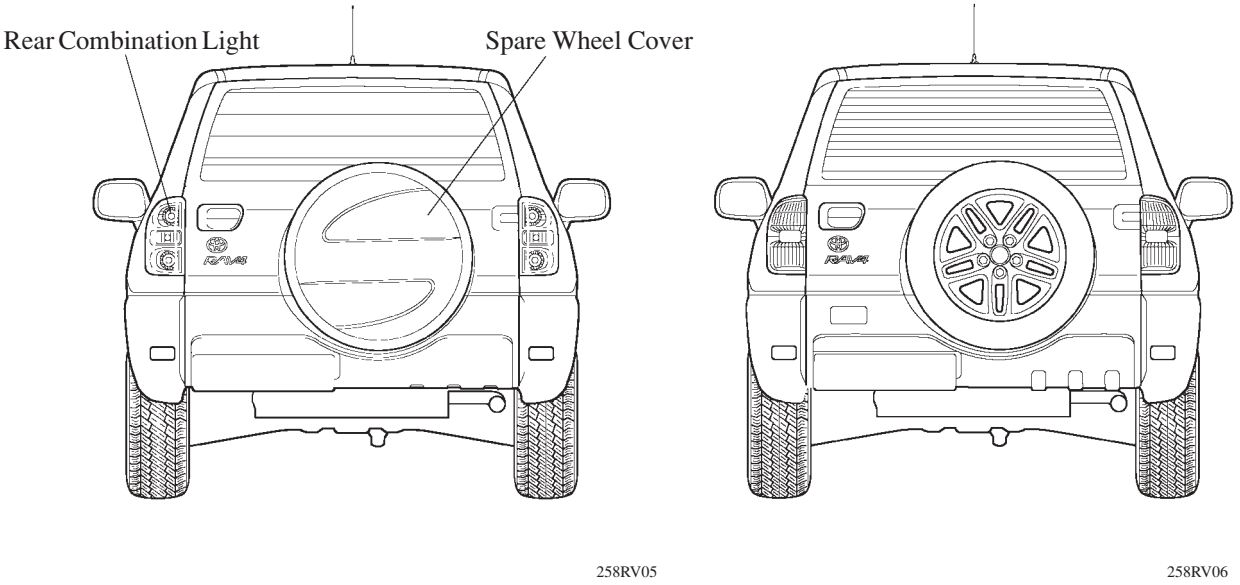

New RAV4 **Previous RAV4**

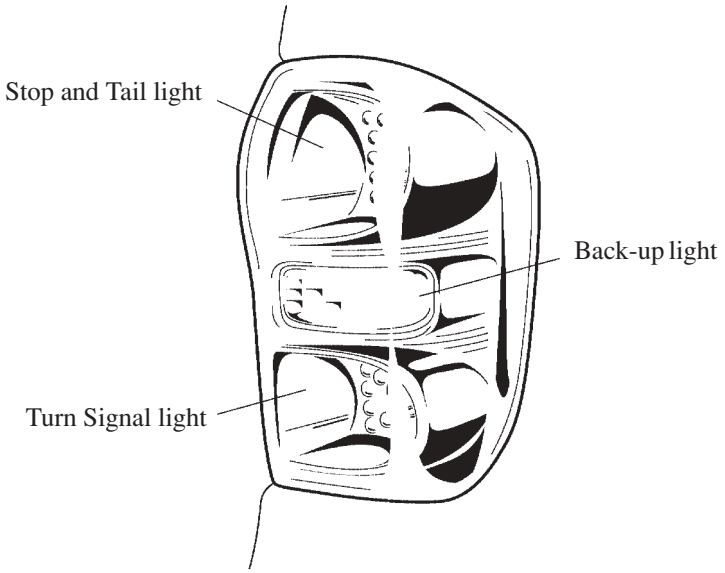

3. Windshield and Door Glass

The color of the privacy glass on the back door has been changed from dark green to cool green.

Destination	Windshield Glass	Front Door Glass	Rear Door Glass	Rear Door Quarter Glass	Quarter Window Glass	Back Door Glass
General Countries, Europe, Australia, G.C.C. countries	Green	Green UV Cut	Green UV Cut	Green UV Cut	Green UV Cut	Green UV Cut
Europe (optional equipment)	Green	Green UV Cut	Privacy	Privacy	Privacy	Privacy

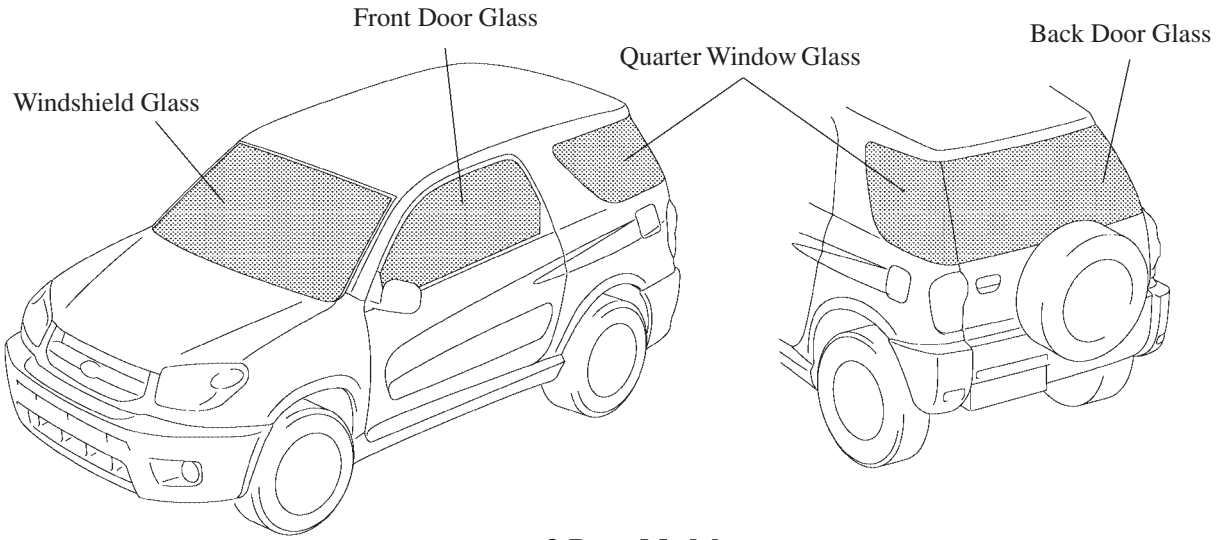

3-Door Model

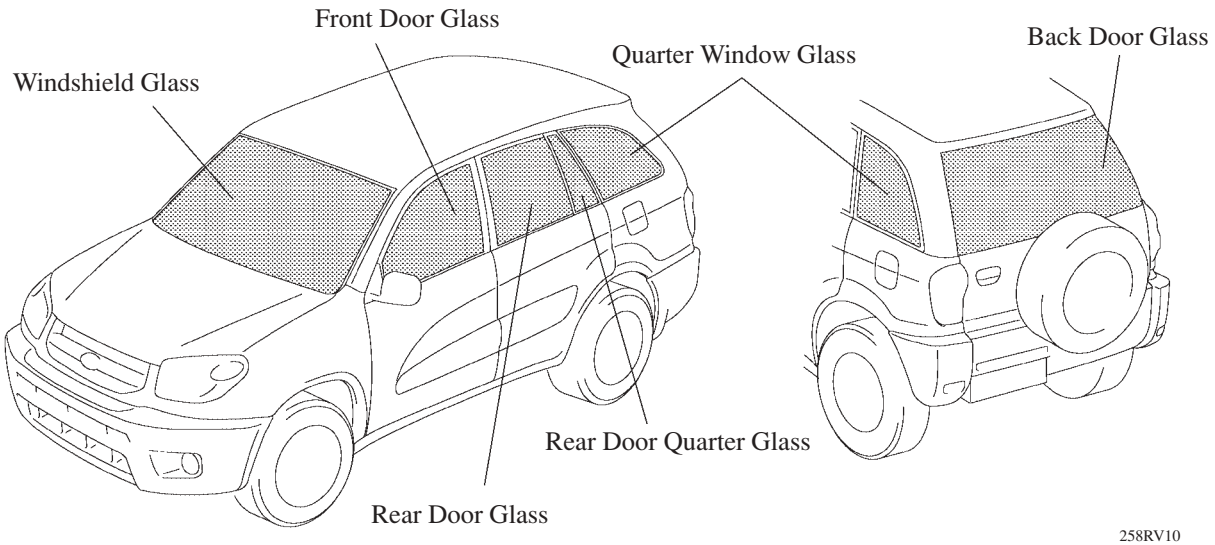

5-Door Model

10

■INTERIOR

1. Instrument Panel

- The meter clusters have been made to look three-dimensional and the color of their dial plates has been changed to white in order to achieve a sporty exterior appearance.
- The center cluster is now independent from the instrument panel. It has been changed to a metallic-decorated panel to achieve a high-quality look.
- Soft-feel paint* has been adopted in the upper area of the instrument panel on the models for Europe in order to improve its quality.
- Compared to the previous model, the silver painted areas of the instrument panel and the console have been changed to a paint with more luster.

*: The paint is designed soft to the touch.

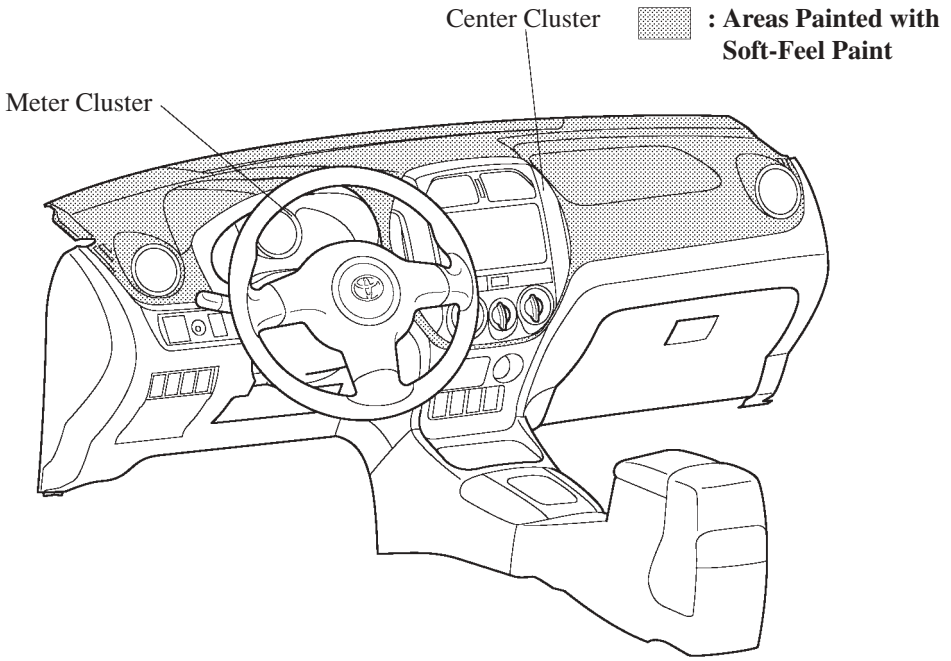

258RV13

2. Shift Knob

The designs of the shift knob have been changed.

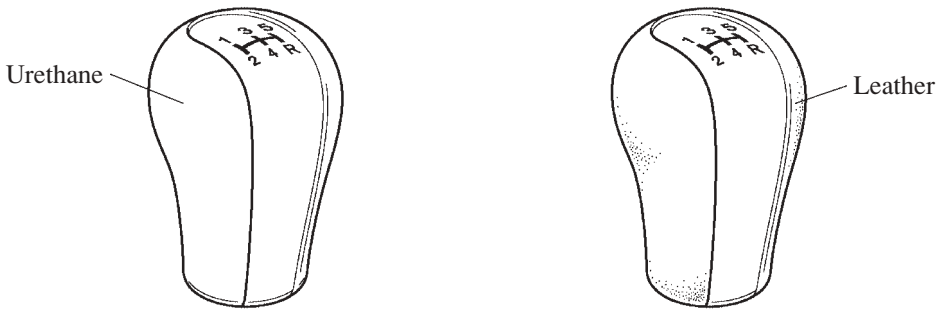

Standard Equipment **Optional Equipment** 258RV73

10

3. Heater Control Panel

- The shapes of the operating switches and knobs on the heater control panel have been changed.
- Along with the availability of the autmatic air conditioner system as new optional equipment on the models for Europe, a control panel for the automatic air conditioner system has been newly provided. (For detail, see page 526)

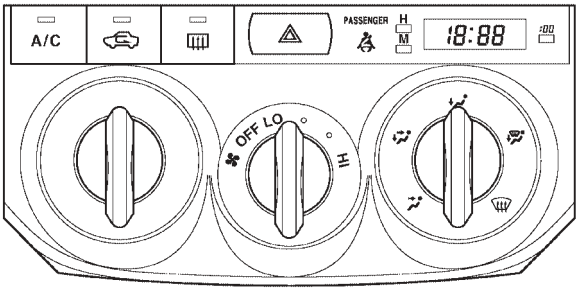

258RV14

for Manual

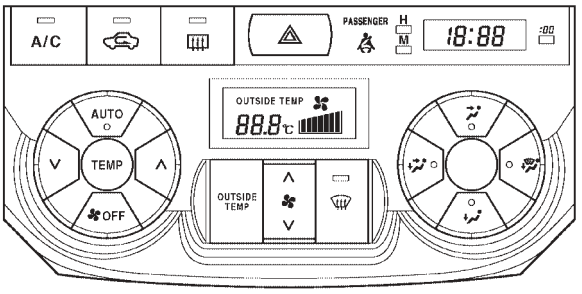

258RV15

for Automatic

4. Steering Wheel

- The steering wheel has been changed to a new, general-purpose three-spoke type.
- Steering pad switches to operate the audio system have been made available as optional equipment on the models for Europe.

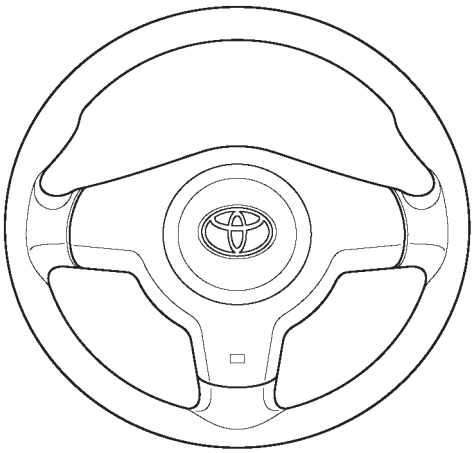

258RV16

Standard

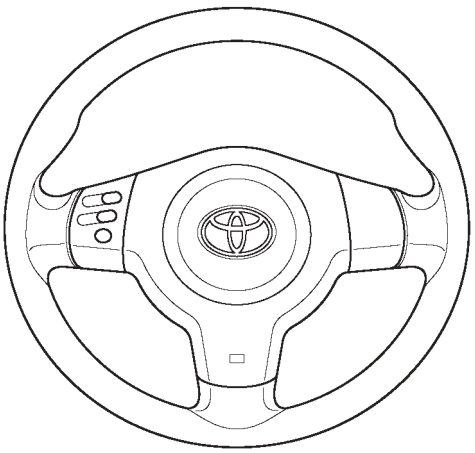

258RV17

With Steering Pad Switch

5. Pillar Garnish

- The shapes of the pillar garnishes have been changed on the models that support the curtain shield airbags.
- Hooks for attaching a room separator only in the rear section have been provided on the models for Europe equipped with curtain shield airbags. (They are available as a set option on the models with rear three-point seat belts.)

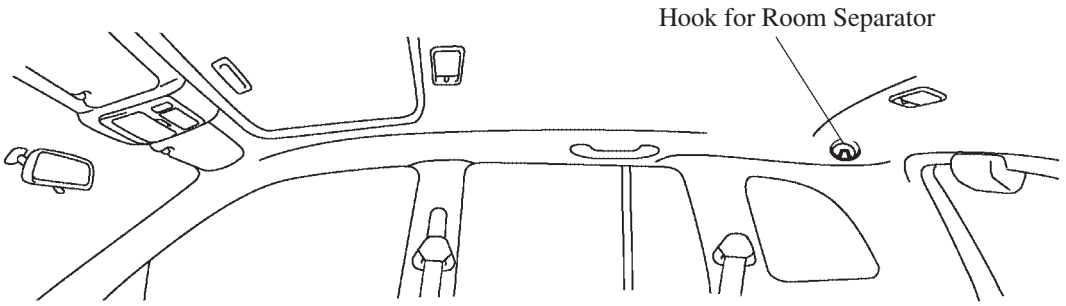

258RV18

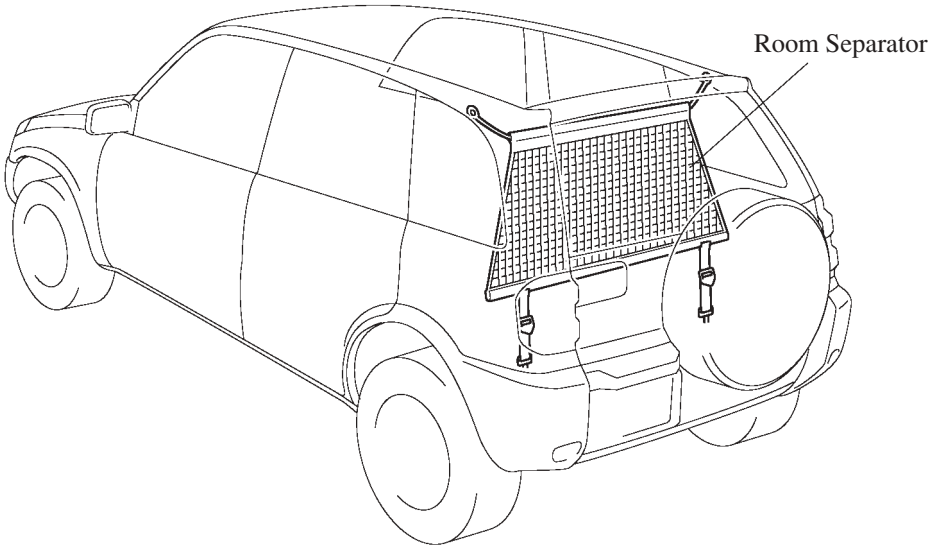

258RV19

6. Door Assist Grip

- The decorative portion of the surface treatment on the door assist grip has been changed from the conventional type to one with a high-quality look.

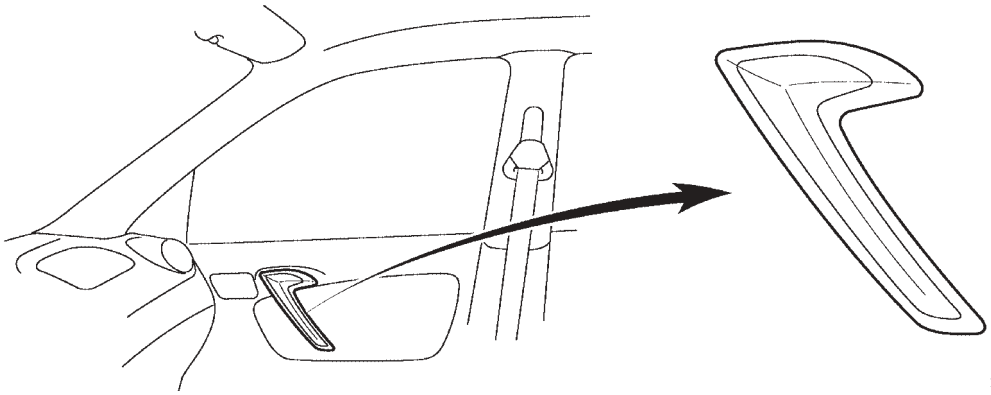

258RV20

7. Sun Visor

- The vanity mirror of the sun visor has been changed to a hard-case vanity mirror.
- A vanity light has been provided on the sun visor of the models for Europe.

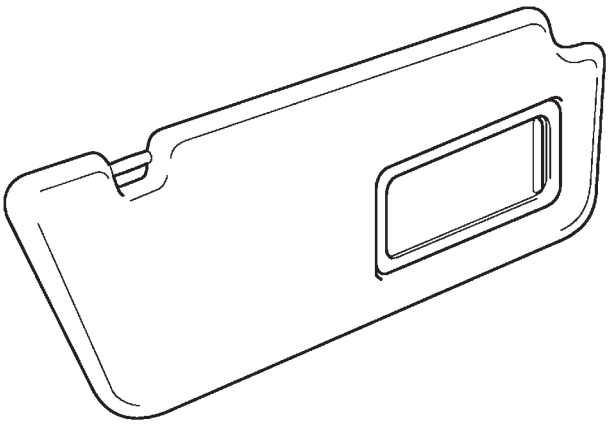

258RV22

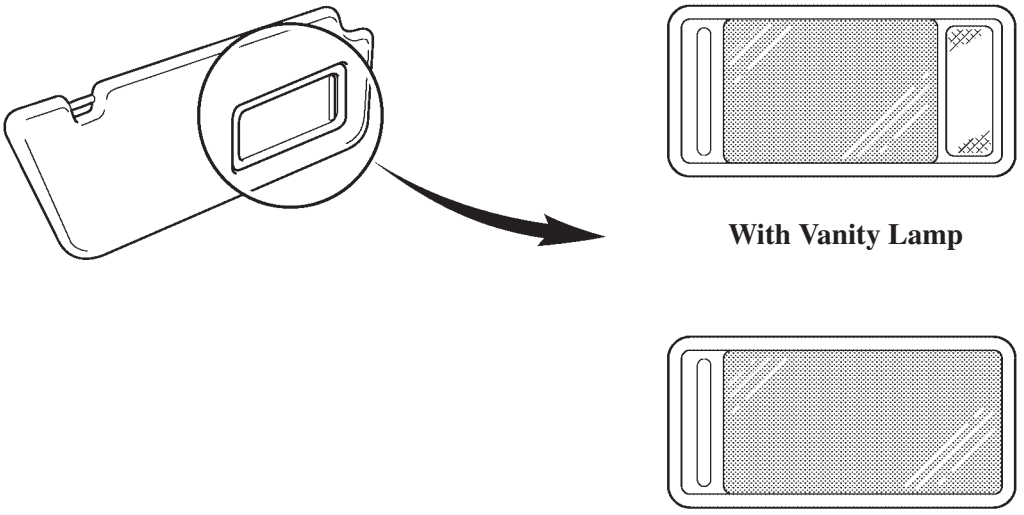

With Vanity Lamp

Without Vanity Lamp

258RV23

■ 1ZZ-FE ENGINE

Cooling System

The TOYOTA genuine Super Long Life Coolant (SLLC) has been adopted. As result, the maintenance interval has been extended.

▶ Specifications ◀

Model			New		Previous
Engine Coolant	Capacity liters (US qts, Imp.qts)		M/T (with Heater)	6.5 (6.9, 5.7)	←
			A/T (with Heater)	6.2 (6.5, 5.4)	
			M/T (without Heater)	5.7 (6.0, 5.0)	
			A/T (without Heater)	5.6 (5.6, 4.9)	
	Type		TOYOTA Genuine SLLC		TOYOTA Genuine LLC
	Color		Pink		Red
	Maintenance Intervals for Europe	First time	160,000 km (100,000 mile)		60,000 km (37,500 mile)
		Subsequent	Every 80,000 km (50,000 mile)		Every 30,000 km (18,000 mile)
	Maintenance Interval For General Countries	Replace at first time	160,000 km (100,000 mile)		Replace Every 40,000 km (25,000 mile) or 24 months Whichever comes first.
		Replace at first time subsequent	Every 80,000 km (50,000 mile)		
Thermostat	Operating Temperature °C (°F)		80 – 84 (176 – 183)		←

- SLLC is pre-mixed (50% coolant and 50% distilled water), so no dilution is needed when adding or replacing SLLC in the vehicle.
- If LLC is mixed with SLLC, the interval for LLC (every 30,000 km (18,000 mile) for Europe model/40,000 km (25,000 mile) or 24 months whichever comes first for General Countries model) should be used.
- You can also apply the new maintenance interval (every 30,000 km (18,000 mile) for Europe model/40,000 km (25,000 mile) or 24 months whichever comes first for General Countries model) to vehicle initially filled with LLC (red-colored), if you use SLLC (pink-colored) for the coolant change.

■ 1AZ-FE ENGINE

1. Major Difference (from previous 1AZ-FE engine)

Item	Outline	
Destination	Europe & G.C.C. Countries	General Countries*
Intake and Exhaust System (See Page 420)	● A throttle body with a built-in throttle control motor has been adopted. ● The exhaust system has been revised to optimize exhaust performance. In addition, the 2 TWCs located directly below the exhaust manifold have been integrated into 1 TWC, and a TWC has been added under the floor. ● A ultra thin-wall, high-cell density ceramic type TWC has been adopted.	● A throttle body with a built-in throttle control motor has been adopted. ● The exhaust system has been revised to optimize exhaust performance. In addition, the 2 TWCs located directly below the exhaust manifold have been integrated into 1 TWC, and a TWC has been added under the floor. ● A ultra thin-wall, high-cell density ceramic type TWC has been adopted.
Valve Mechanism	● The cam profile has been changed in conjunction with the change in the valve timing.	● The cam profile has been changed in conjunction with the change in the valve timing.
Fuel System (See Page 422)	● The compact 12-hole type injector with high atomizing performance has been adopted. ● Quick connectors have been adopted for joining the fuel tubes. ● The shape of the fuel tank has been changed.	● The compact 12-hole type injector with high atomizing performance has been adopted. ● Quick connectors have been adopted for joining the fuel tubes.
Cooling System (See Page 424)	● The engine ECU controls the operation of the cooling fan has been adopted. ● SLLC (Super Long Life Coolant) has been adopted.	● SLLC (Super Long Life Coolant) has been adopted.
Charging System (See Page 425)	● A segment conductor type alternator has been adopted on the automatic transaxle model.	● A segment conductor type alternator has been adopted on the automatic transaxle model.
Engine Control System (See Page 427)	● The ETCS-i (Electronic Throttle Control System-intelligent) has been adopted. ● A planar type air fuel ratio sensor has been adopted. ● A flat type knock sensor has been adopted. ● A linear type accelerator pedal position sensor has been adopted. ● A no-contact type throttle position sensor has been adopted. ● The number of the air fuel ratio sensor and the oxygen sensor become one. ● The purge flow rate has been changed.	● The ETCS-i (Electronic Throttle Control System-intelligent) has been adopted. ● A planar type air fuel ratio sensor has been adopted. ● A flat type knock sensor has been adopted. ● A linear type accelerator pedal position sensor has been adopted. ● The number of the air fuel ratio sensor and the oxygen sensor become one. ● A no-contact type throttle position sensor has been adopted.

*: Only for Unleaded Gasoline Engine Model

▶ Engine Specifications ◀

Model				New	Previous
No. of Cyli. & Arrangement				4-Cylinder, Inline	←
Valve Mechanism				16-Valve DOHC, Chain Drive	←
Combustion Chamber				Pentroof Type	←
Manifolds				Cross-Flow	←
Fuel System				EFI	←
Ignition System				DIS	←
Displacement cm^3 (cu. in.)				1998 (121.9)	←
Bore & Stroke mm (in.)				86.0 x 86.0 (3.39 x 3.39)	←
Compression Ratio		Unleaded Gasoline		9.8 : 1	←
Max. Output (EEC)		Unleaded Gasoline		110 kW @ 6000 rpm	←
Max. Torque (EEC)		Unleaded Gasoline		192 N·m @ 4000 rpm	←
Valve Timing	Intake	Unleaded Gasoline	Open	3 – 43° BTDC	–4° – 46° BTDC
			Close	60° – 20° ATDC	60° – 10° ATDC
	Exhaust		Open	37° BBDC	45° BBDC
			Close	3° ATDC	←
Fuel Octane Number RON		Unleaded Gasoline		95 or More	←
Oil Grade				API SL, EC or ILSAC	API SJ, EC or ILSAC
Emission Regulation				European STEP IV	European STEP III

2. Intake and Exhaust System

Throttle Body

- A DC motor with excellent response and minimal power consumption is used for the throttle control motor. The engine ECU performs the duty ratio control of the direction and the amperage of the current that flows to the throttle control motor in order to regulate the opening angle of the throttle valve.
- The link-less type throttle body has adopted and it realizes excellent throttle control.
  For details of ETCS-i control, refer to see page 438.

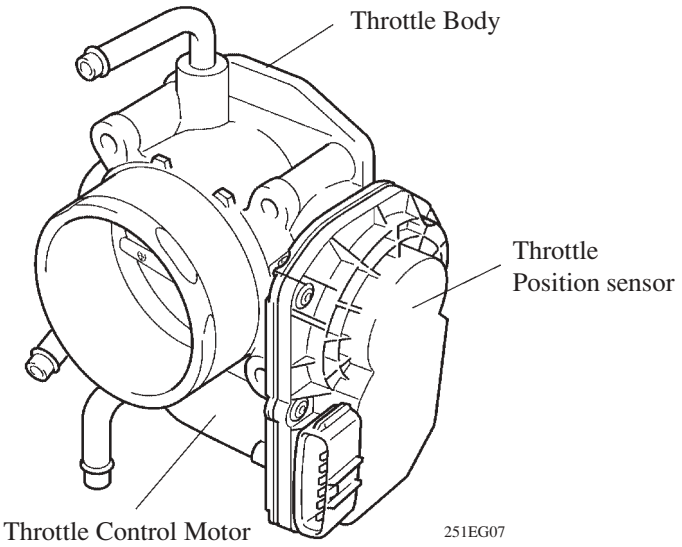

Exhaust Manifold

- To comply with the STEP-IV exhaust emission regulations in Europe, the exhaust manifold has been changed from dual pipes to a single pipe, and the warm-up performance of the catalyst has been improved, in order to reduce the exhaust emissions during the starting of the engine.
- Along with the change to a single pipe, the number of startup converters (TWC) has been changed from two to one.
- The branches of the exhaust manifold have been changed from the unequal-length to an equal-length type, in order to improve engine performance in the low- to medium-speed range, and fuel economy in the high-speed range.

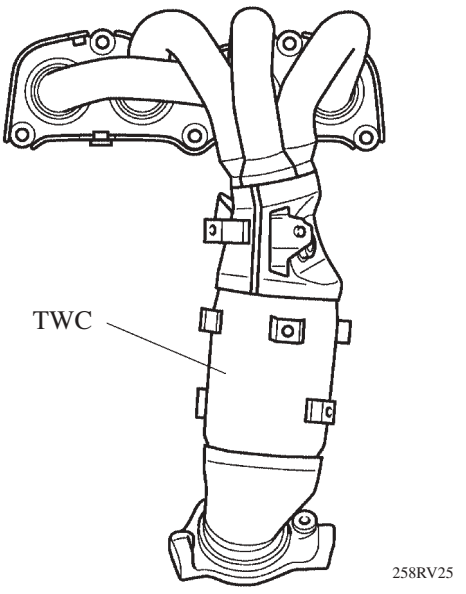

New

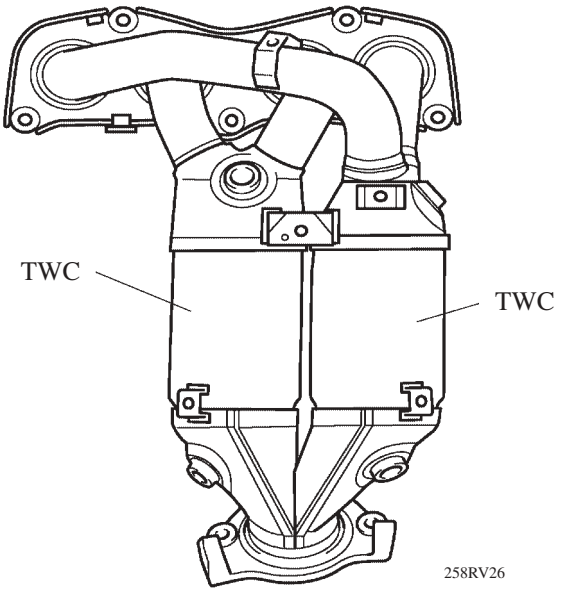

Previous

Three-Way Catalytic Converter

- The ceramic type TWC (Three-Way Catalytic Converter) has been adopted directly below the exhaust manifold and under floor. This TWC enables to improvement in reducing the amount of exhaust emissions by optimizing the cell's density and wall thickness.

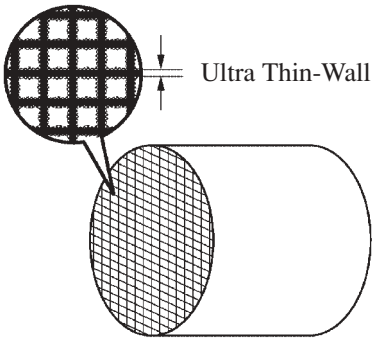

198EG06

Exhaust Pipe

- To comply with the STEP-IV exhaust emission regulations on the models for Europe and the G. C. C. countries, their exhaust pipe system has adopted an under floor catalyst and a double-wall pipe upstream from the catalyst.

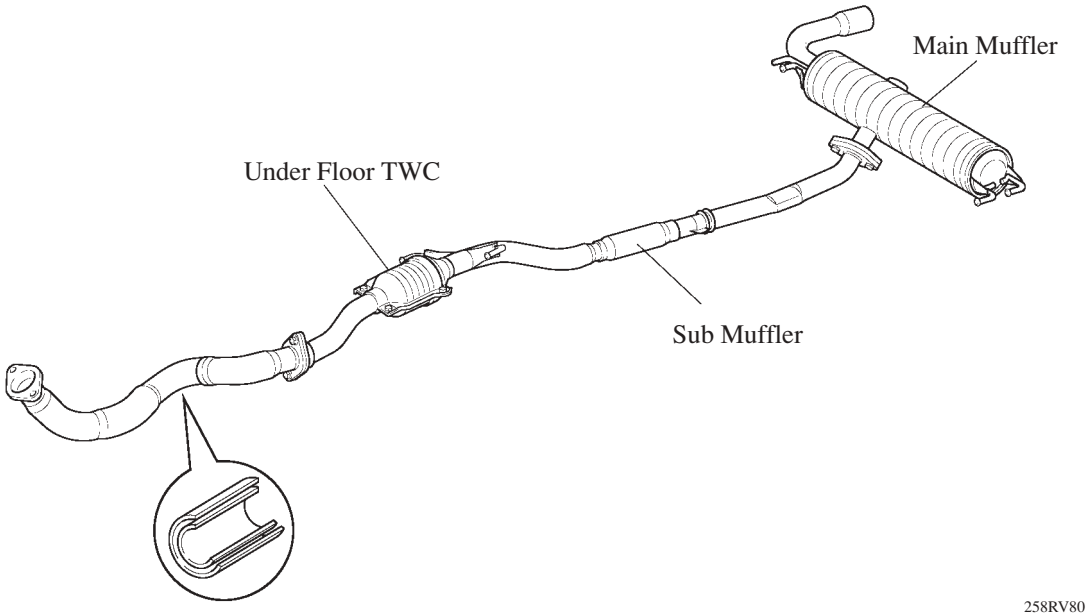

258RV80

3. Fuel System

Fuel Injector

- An injector, based on the compact 12-hole type injector of the previous model, with moving parts that have been made lightweight and the magnetic circuit optimized performance has been adopted.
- The injector nozzle has been placed closer to the orifice, thus reducing the distance between the injector and the intake valve. This reduces the amount of fuel that adheres to the intake port, which improves fuel economy and reduces exhaust emissions.
- The diameter of the new injector orifice has been increased from 0.18 mm (0.0071 in.) to 0.20 mm (0.0079 in.) because a slight increase in the orifice diameter increases the injection angle and facilitates the instantaneous mixture of fuel with air. This promotes the atomization of fuel into a fine mist.
- The orifice of the new injector has been changed from the straight type to the taper type. As a result, the fuel supply efficiency has been increased in order to ensure the reliable supply of fuel into the combustion chamber.

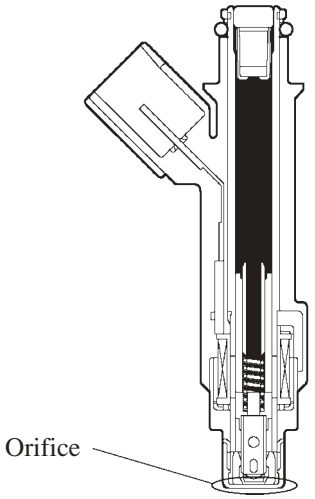

New

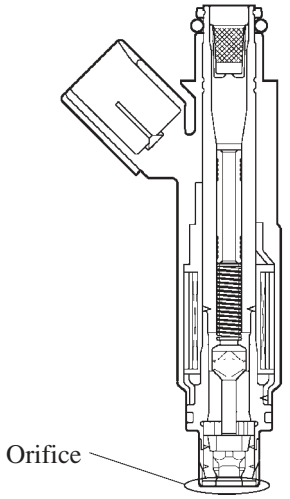

Previous

251EG10

New	Previous
0.2 mm (0.0079 in.) 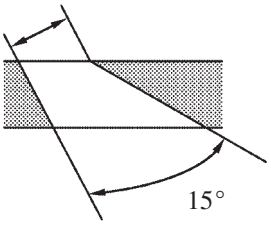 251EG04	0.18 mm (0.0071 in.) 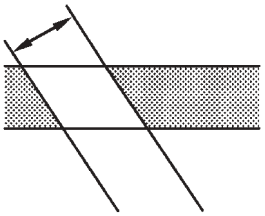 251EG05

Fuel Pipe

- The rubber tube joints for the fuel tubes on the models for Europe and the G.C.C. countries have been changed to quick-connector joints.

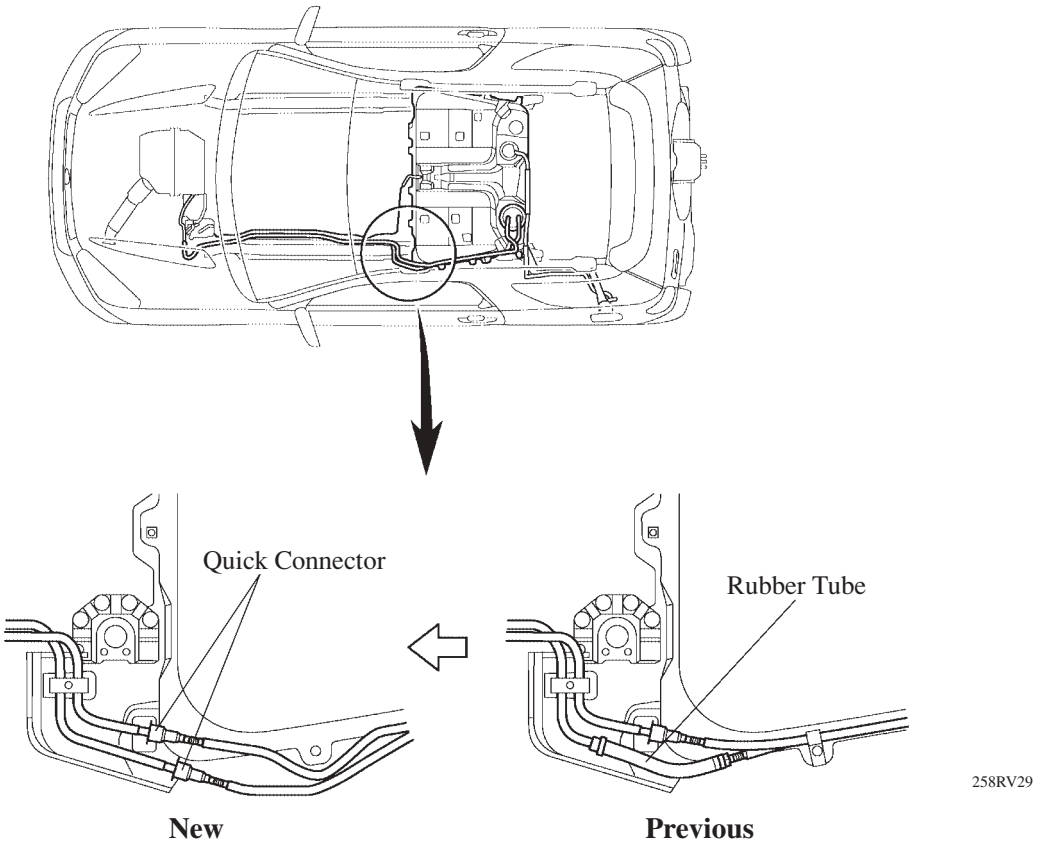

Fuel Tank

The shape of the fuel tank has been changed on the models other than the general countries models.

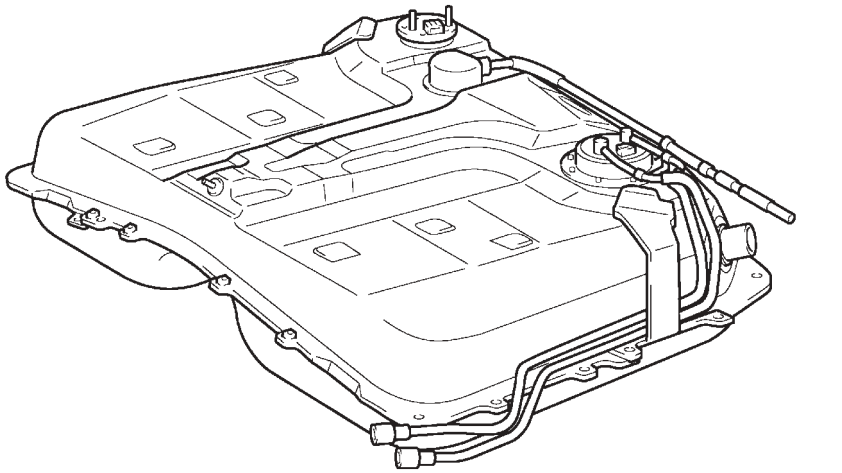

4. Cooling System

Genuine Toyota SLLC (Super Long Life Coolant) has been adopted. As a result, the maintenance interval has been extended. For detailed specifications, refer to page 417.

▶ Specifications ◀

Model		New			Previous
Engine Coolant	Capacity liter (US qts, Imp.qts)	Europe	M/T	6.3 (6.7, 5.6)	←
			A/T	6.6 (7.0, 5.8)	
		G. C. C Countries	M/T	6.6 (7.0, 5.8)	
			A/T	6.5 (6.9, 5.7)	
		General Countries	M/T	6.4 (6.7, 5.6)	
			A/T	6.3 (6.6, 5.5)	

5. Charging System

- Instead of the conventional type alternator, a compact and lightweight segment conductor type alternator has been adopted for automatic transaxle model. This type of alternator generates high amperage output in a highly efficient manner.
- This alternator has a joined segment conductor system, in which multiple segment conductors are welded together to form the stator. Compared to the conventional winding system, the electrical resistance is reduced due to the shape of the segment conductors, and their arrangement helps to make the alternator more compact.

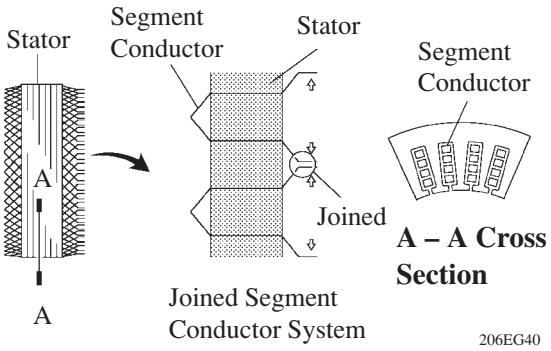

Segment Conductor Type Alternator

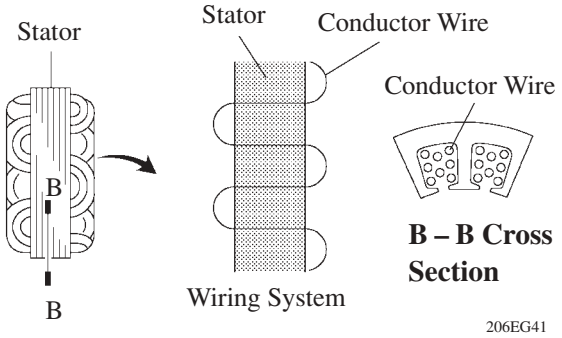

Conventional Type Alternator

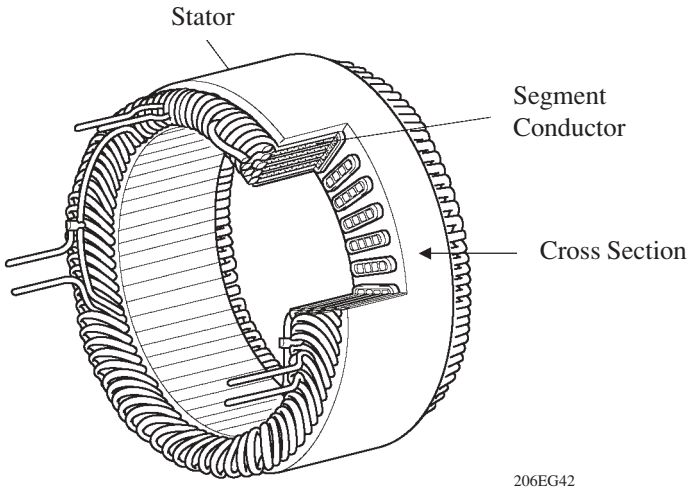

Stator of Segment Conductor type Alternator

▶ Specifications ◀

Type	Segment Conductor (SE0)
Rated Voltage	12 V
Output Rated	100 A
Initial Output Starting Speed	1500 rpm Max.

▶ Wiring Diagram ◀

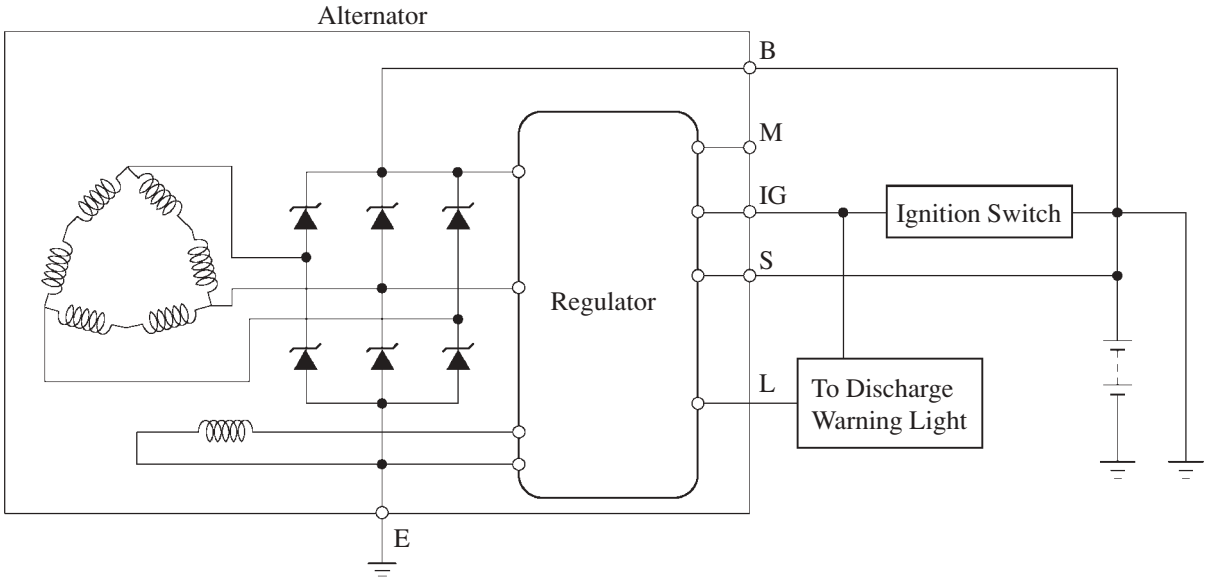

6. Engine Control System

General

The engine control system of the 1AZ-FE engine on the new RAV4 has following system.

System	Outline	New	Previous
EFI (Electronic Fuel Injection)	An L-type EFI system directly detects the intake air mass with a hot wire type mass air flow meter.	○	○
ESA (Electronic Spark Advance)	Ignition timing is determined by the engine ECU based on signals from various sensors. The engine ECU corrects ignition timing in response to engine knocking.	○	○
ETCS-i (Electronic Throttle Control System-intelligent) (See page 438)	● Optimally controls the throttle valve opening in accordance with the amount of accelerator pedal effort and the condition of the engine and the vehicle. ● A link-less type is used, without an accelerator cable. ● An accelerator pedal position sensor is provided on the accelerator pedal. ● A no-contact type throttle position sensor and accelerator pedal position sensor are used. ● Controls the fast idle and idle speed.	○	—
VVT-i (Variable Valve Timing-intelligent)	Controls the intake camshaft to an optimal valve timing in accordance with the engine condition.	○	○
Air Fuel Ratio Sensor, Oxygen Sensor Heater Control	Maintains the temperature of the air fuel ratio sensor or oxygen sensor at an appropriate level to increase accuracy of detection of the oxygen concentration in the exhaust gas.	○	○
Air Conditioner Cut-off Control*1	By turning the air conditioner compressor ON or OFF in accordance with the engine condition, drivability is maintained.	○	○
Cooling Fan Control System	Radiator cooling fan operation is controlled by water temperature sensor signal (THW) and the condition of the air conditioner operation.	○	—
Fuel Pump Control	Fuel pump operation is controlled by signal from the engine ECU.	○	○
	A fuel cut control is adopted to stop the fuel pump when the airbag is deployed during front or side collision.	○	○
Evaporative Emission Control	The engine ECU controls the purge flow of evaporative emission (HC) in the charcoal canister in accordance with engine conditions.	○	○
Engine Immobilizer*2	Prohibits fuel delivery and ignition if an attempt is made to start the engine with an invalid ignition key.	○	○
	The ID code stored in the transponder key ECU is compared with that of the transponder tip in the ignition key.	○	—
Diagnosis	When the engine ECU detects a malfunction, the engine ECU diagnoses and memorizes the failed section.	○	○
	All the DTCs (Diagnostic Trouble Codes) have been made to correspond to the SAE controlled codes.	○	—
Fail-Safe	When the engine ECU detects a malfunction, the engine ECU stops or controls the engine according to the data already stored in the memory.	○	○

*1: With Air Conditioner Models
*2: With Engine Immobilizer Model

Construction

The configuration of the engine control system in the 1AZ-FE in the new RAV4 is as shown in the following chart.

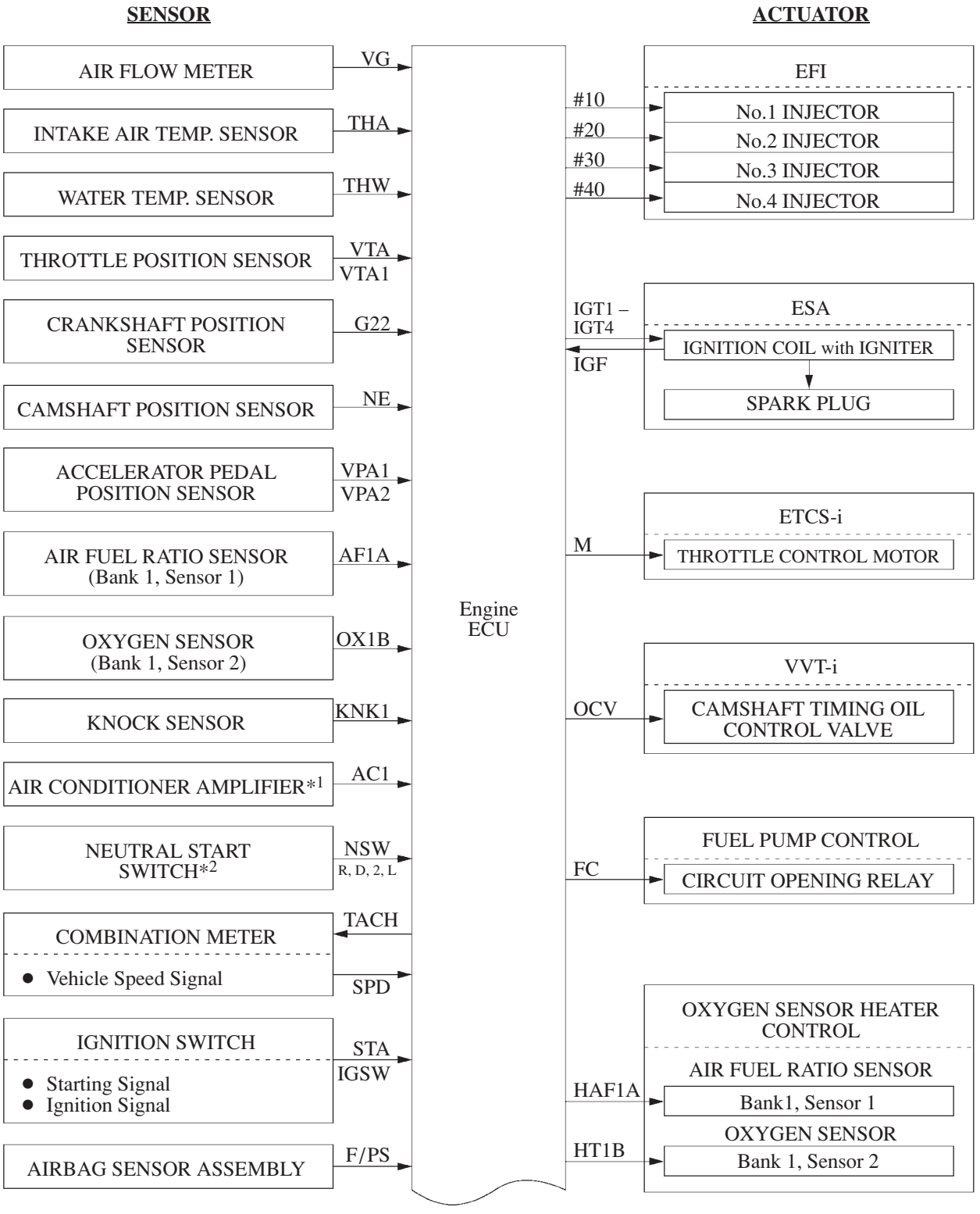

(Continued)

258RV38

*1: With Air Conditioner

*2: Only for Automatic Transaxle

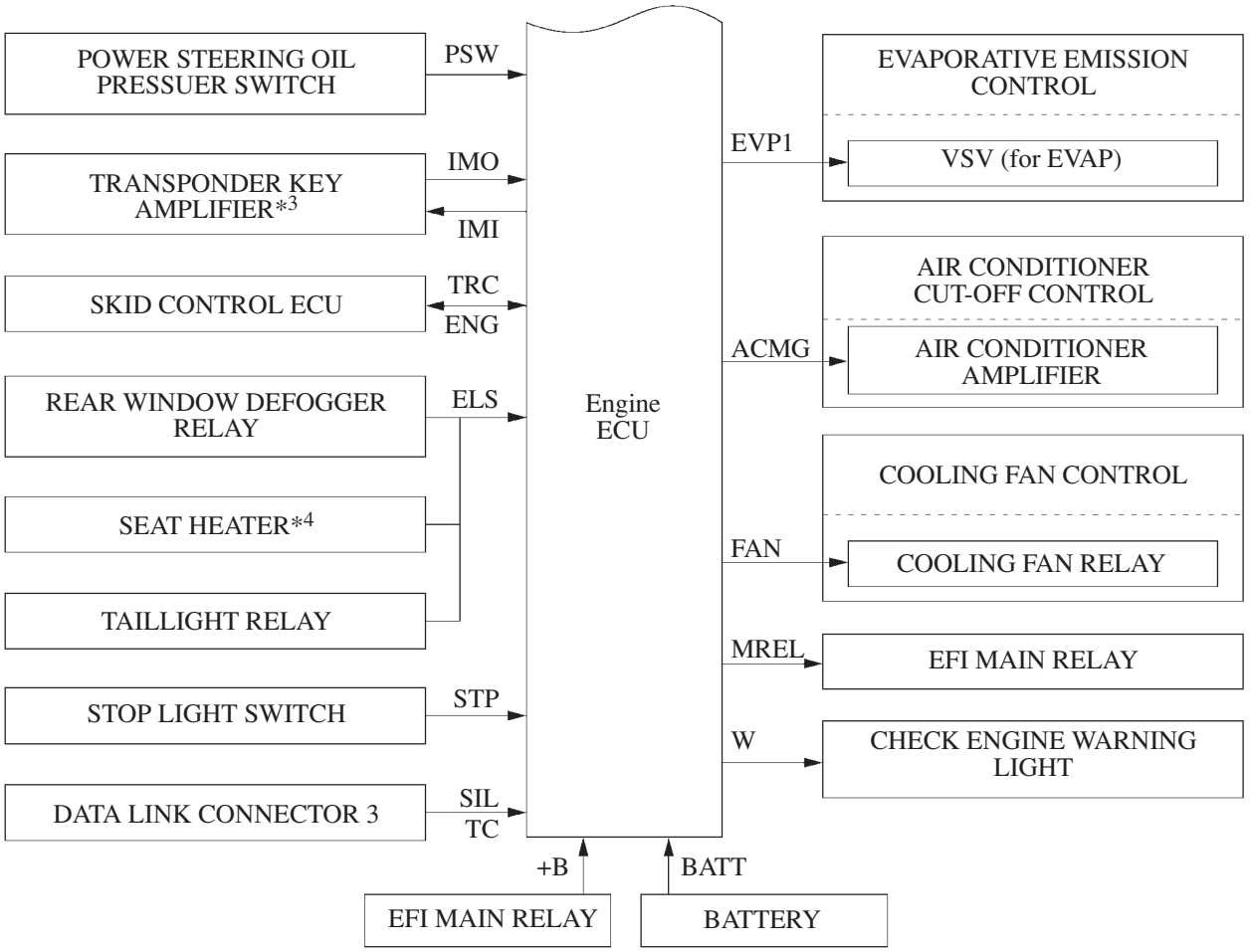

258RV39

*3: With Engine Immobilizer
*4: With Seat Heater

10

Engine Control System Diagram

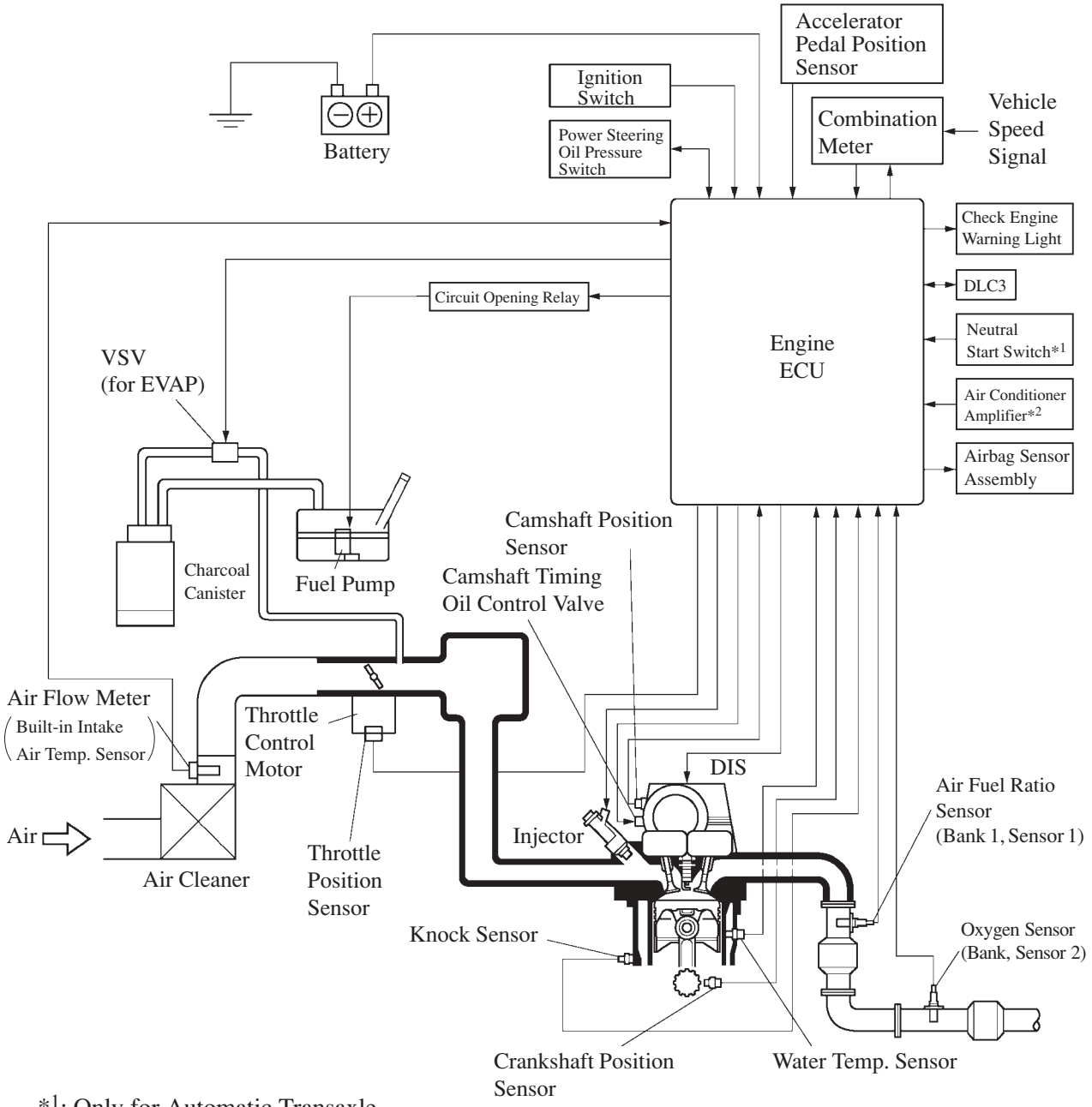

*1: Only for Automatic Transaxle
*2: With Air Conditioner

258RV40

Layout of Main Components

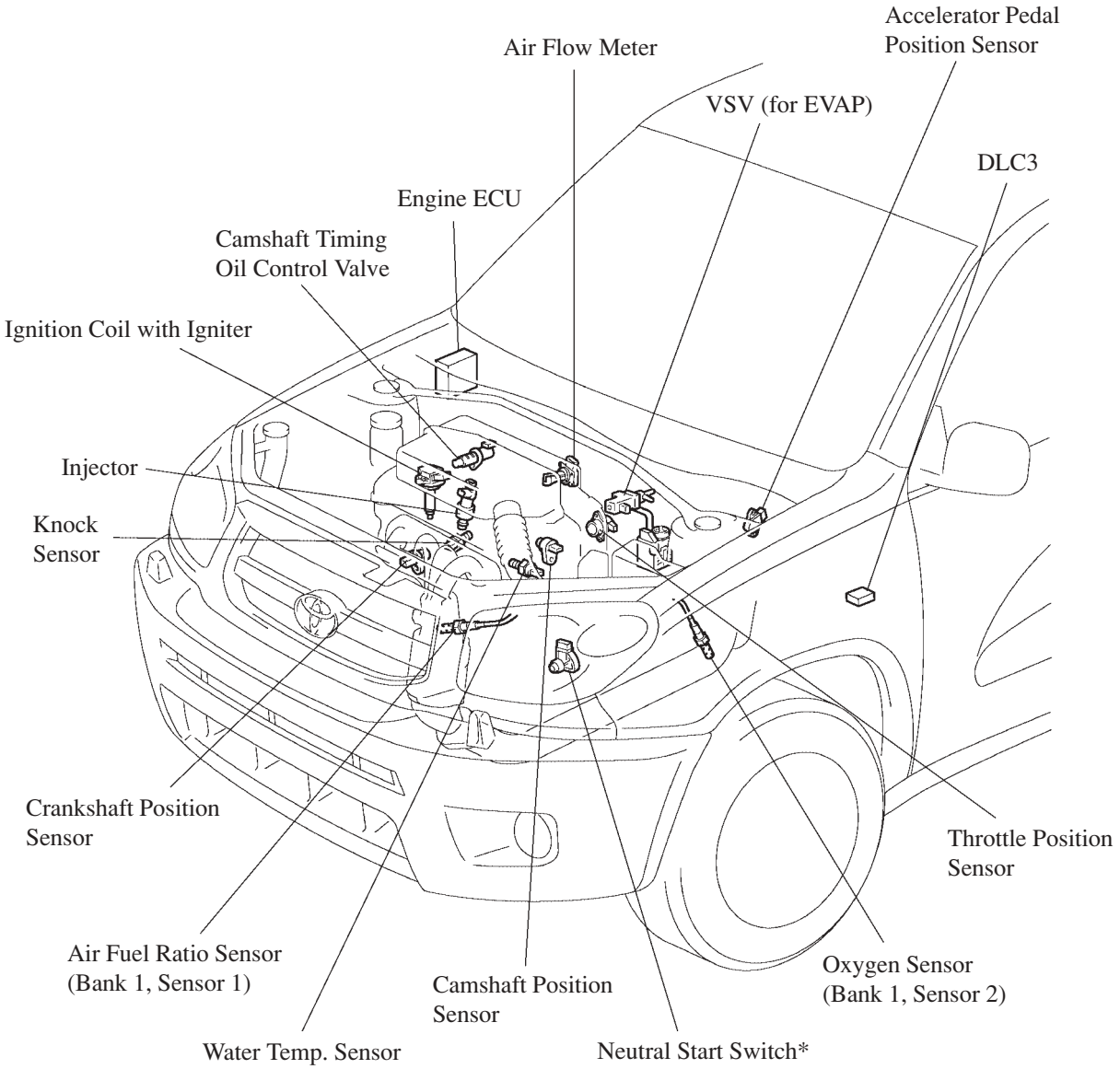

*: Only for Automatic Transaxle

Main Components of Engine Control System

1) General

The following table compares the main components for new and previous 1AZ-FE engine.

Components	New		Previous	
	Outline	Quantity	Outline	Quantity
Engine ECU	32-bit CPU	1	←	1
Air Fuel Ratio Sensor (Bank 1, Sensor 1)	with Heater Type (Planar Type)	1	with Heater Type (Cup Type)	2
Oxygen Sensor (Bank 1, Sensor 2)	with Heater Type (Cup Type)	1	←	2
Air Flow Meter	Hot-wire Type	1	←	
Crankshaft Position Sensor (Rotor Teeth)	Pick-up Coil Type (36-2)	1	←	
Camshaft position Sensor (Rotor Teeth)	Pick-up Coil Type (3)	1	←	
Knock Sensor	Built-in Piezoelectric Element Type (Flat Type)	1	Built-in Piezoelectric Element Type (Resonant Type)	1
Accelerator Pedal Position Sensor	Linear Type	1	—	
Throttle Position Sensor	No-contact Type	1	Linear Type	1

2) Air Fuel Ratio Sensor (Planar Type)

The planar type of air fuel ratio sensor has been adopted.
The air-fuel ratio sensor is the planar type. Compared to the conventional type, the sensor and heater portions of the planar type are narrower overall. Because the heat of the heater acts directly on the alumina and zirconia (of the sensor portion), it accelerates the activation of the sensor.

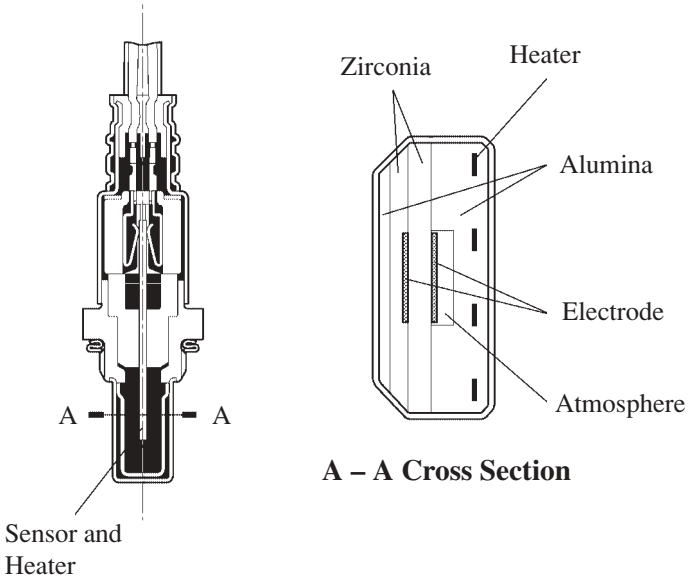

3) Knock Sensor (Flat Type)

a. General

In the conventional type knock sensor (resonant type), a vibration plate which has the same resonance point as the knocking frequency of the engine is built in and can detect the vibration in this frequency band.

On the other hand, a flat type knock sensor (non-resonant type) has the ability to detect vibration in a wider frequency band from about 6 kHz to 15 kHz, and has the following features.

- The engine knocking frequency will change a bit depending on the engine speed. The flat type knock sensor can detect the vibration even when the engine knocking frequency is changed. Thus the vibration detection ability is increased compared to the conventional type knock sensor, and a more precise ignition timing control is possible.

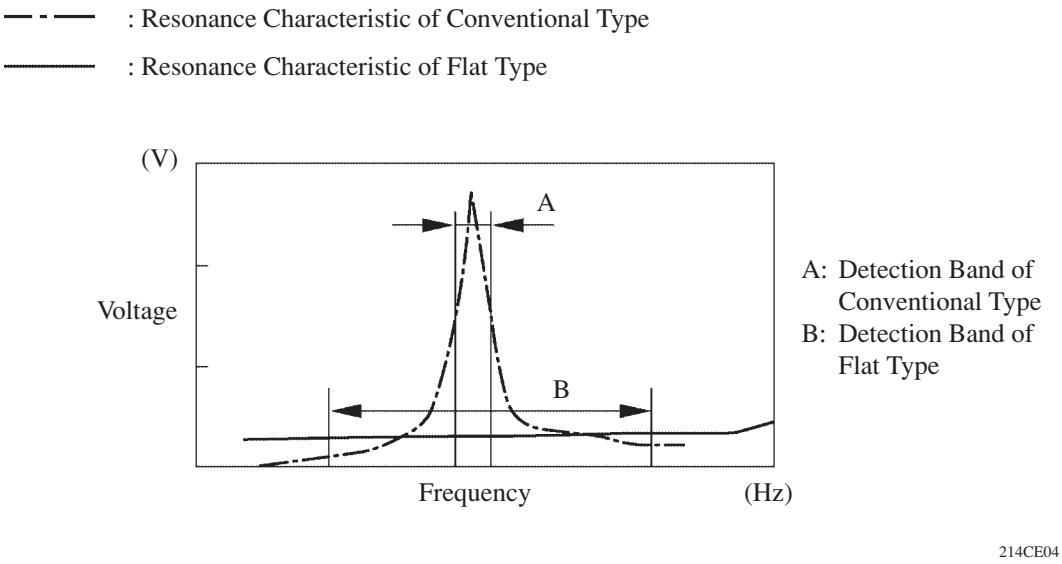

Characteristic of Knock Sensor

b. Construction

- The flat type knock sensor is installed on the engine through the stud bolt installed on the cylinder block. For this reason, a hole for the stud bolt is running through in the center of the sensor.
- Inside of the sensor, a steel weight is located on the upper portion and a piezoelectric element is located under the weight through the insulator.
- The open/short circuit detection resistor is integrated.

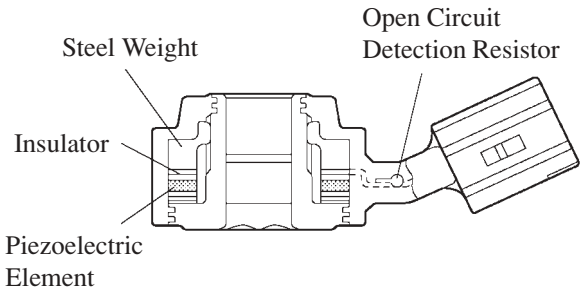

Flat Type Knock Sensor (Non-Resonant Type)

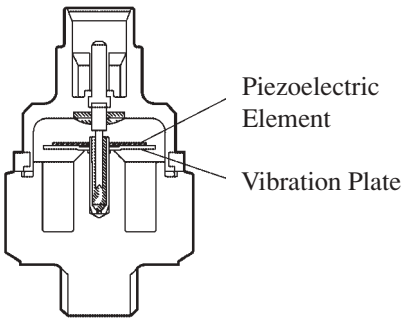

Conventional Type Knock Sensor (Resonant Type)

c. Operation

The knocking vibration is transmitted to the steel weight and its inertia applies pressure to the piezoelectric element. The action generates electromotive force.

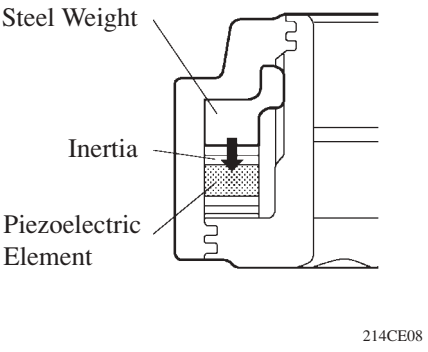

d. Open/Short Circuit Detection Resistor

During the ignition is ON, the open/short circuit detection resistor in the knock sensor and the resistor in the engine ECU keep the voltage at the terminal KNK1 of engine constant.
An IC (Integrated Circuit) in the engine ECU is always monitoring the voltage of the terminal KNK1. If the open/short circuit occurs between the knock sensor and the engine ECU, the voltage of the terminal KNK1 will change and the engine ECU detects the open/short circuit and stores DTC (Diagnostic Trouble Code).

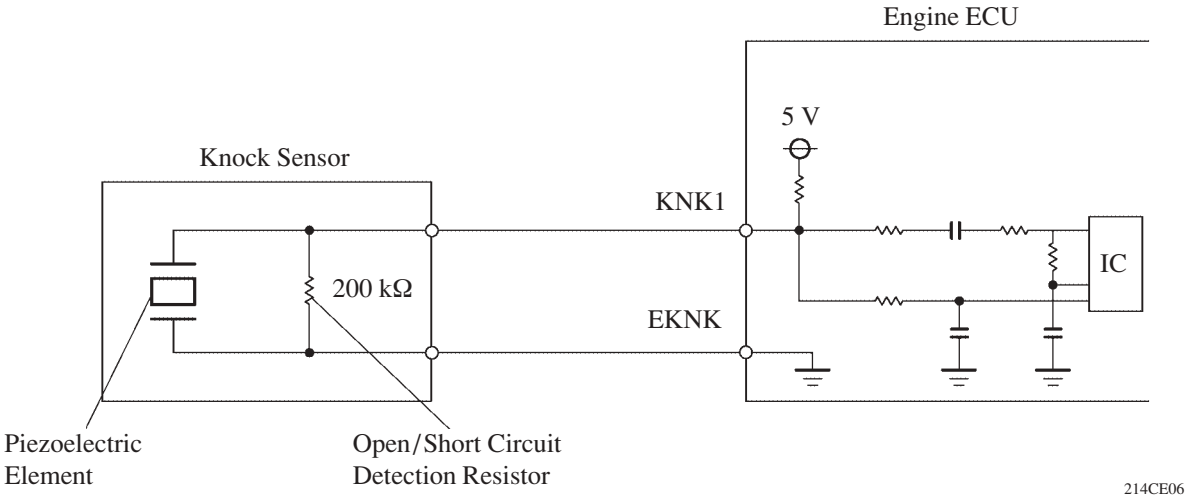

Service Tip

- In accordance with the adoption of open/short circuit detection resistor, the inspection method for the sensor has been changed. For details, refer to the 1AZ-FE engine Repair Manual Supplement (Pub. No. RM1079E).
- To prevent the water accumulation in the connector, make sure to install the flat type knock sensor in the position as shown in the following illustration.

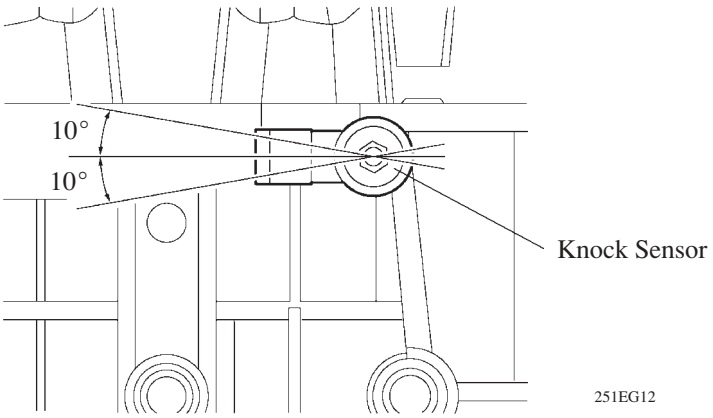

10

4) Accelerator pedal position sensor

This sensor converts the accelerator pedal depressed angles into electric signals with two different characteristics and outputs them to the engine ECU. One is the VPA1 signal that linearly outputs the voltage along the entire range of the accelerator pedal depressed angle. The other is the VPA2 signal that outputs on offset voltage.

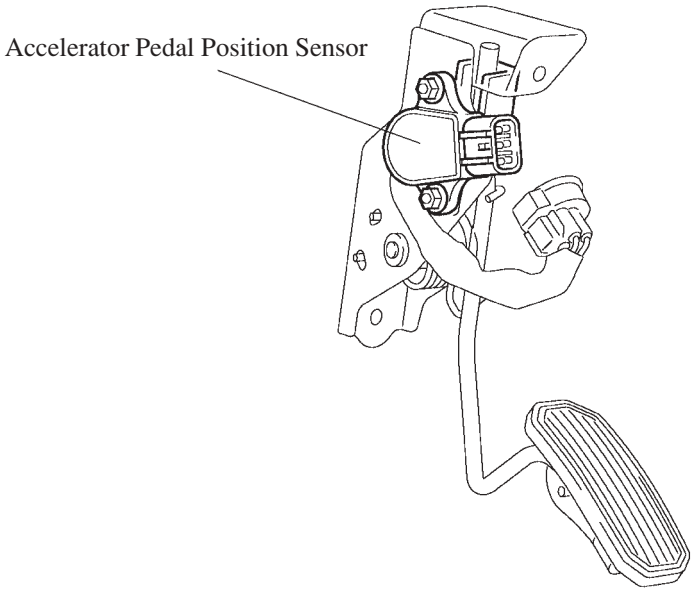

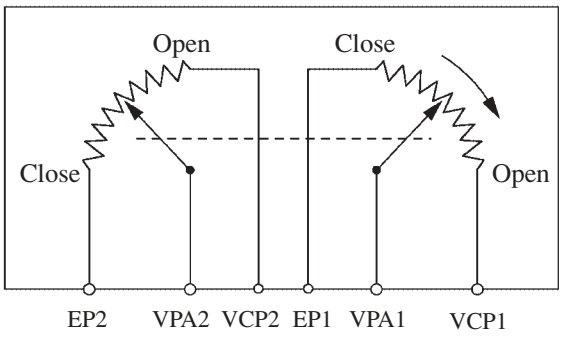

Accelerator Pedal Position Sensor

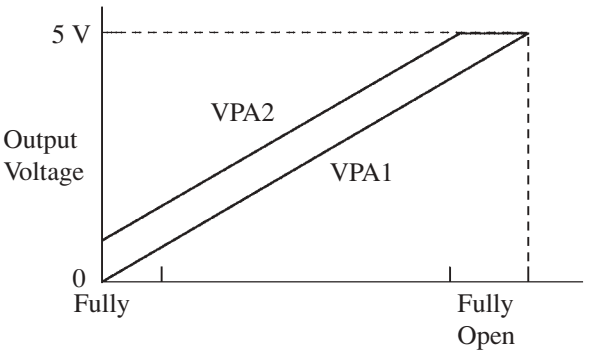

Accelerator Pedal Depressed Angle 251EG13

5) Throttle position sensor (no-contact type)

The throttle position sensor is mounted on the throttle body, to detect the opening angle of the throttle valve, the throttle position sensor converts the magnetic flux density that changes when the magnetic yoke (located on the same axis as the throttle shaft) rotates around the Hall IC into electric signals to operate the throttle control motor.

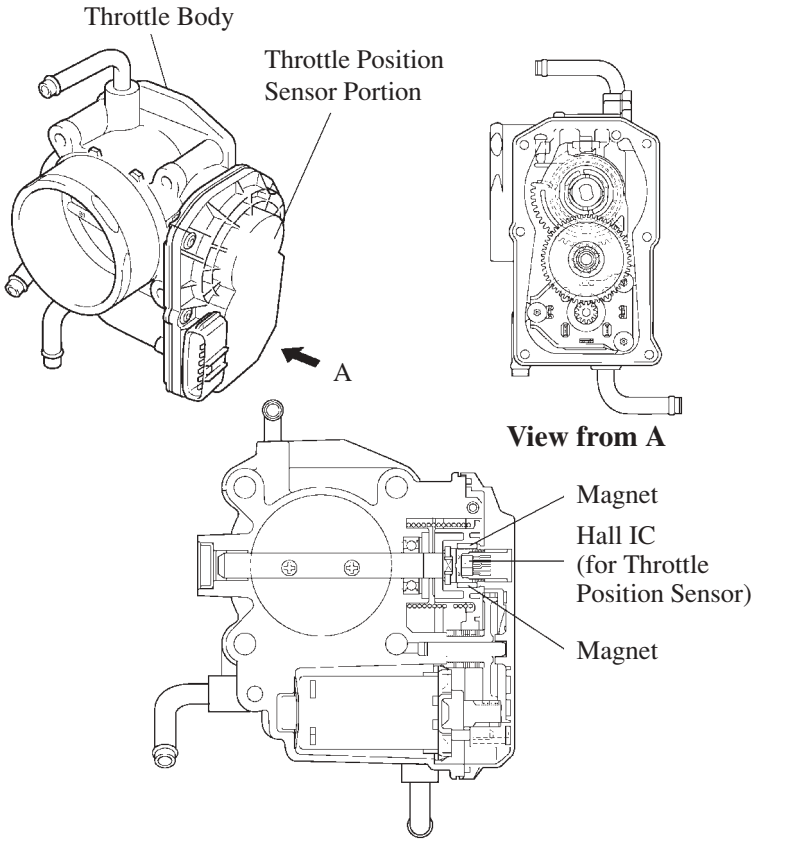

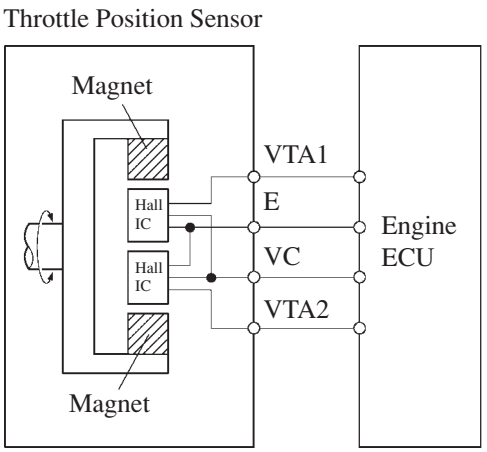

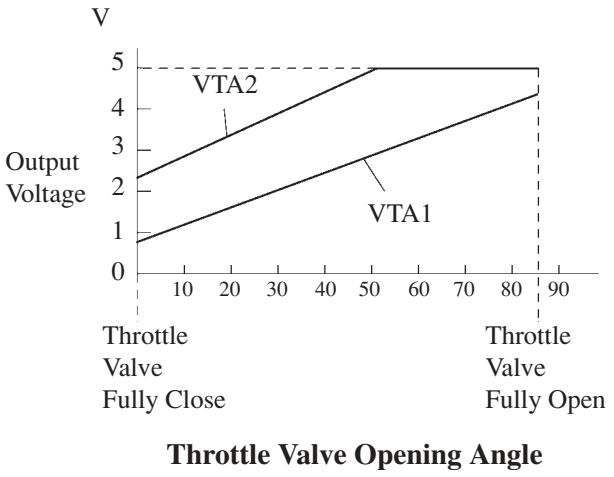

Service Tip

The inspection method differs from the conventional throttle position sensor because this sensor uses a Hall IC. For details, refer to the 1AZ-FE engine Repair Manual Supplement (Pub. No. RM1079E).

10

ETCS-i (Electronic Throttle Control System-intelligent)

- The ETCS-i is used, providing excellent throttle control in all the operating ranges.
- In the conventional throttle body, the throttle valve opening in determined invariably by the amount of the accelerator pedal effort. In contrast, the ETCS-i uses the engine ECU to calculate the optimal throttle valve opening that is appropriate for the respective driving condition and uses a throttle control motor to control the opening.
- The linear type accelerator pedal position sensor has been adopted.
- No-contact type throttle position sensor has been adopted.
- The ETCS-i controls the ISC (Idle Speed Control) system, the TRC (Traction Control) and the VSC (Vehicle Stability Control) system.
- In case of an abnormal condition, this system transfers to the limp mode.

▶ System Diagram ◀

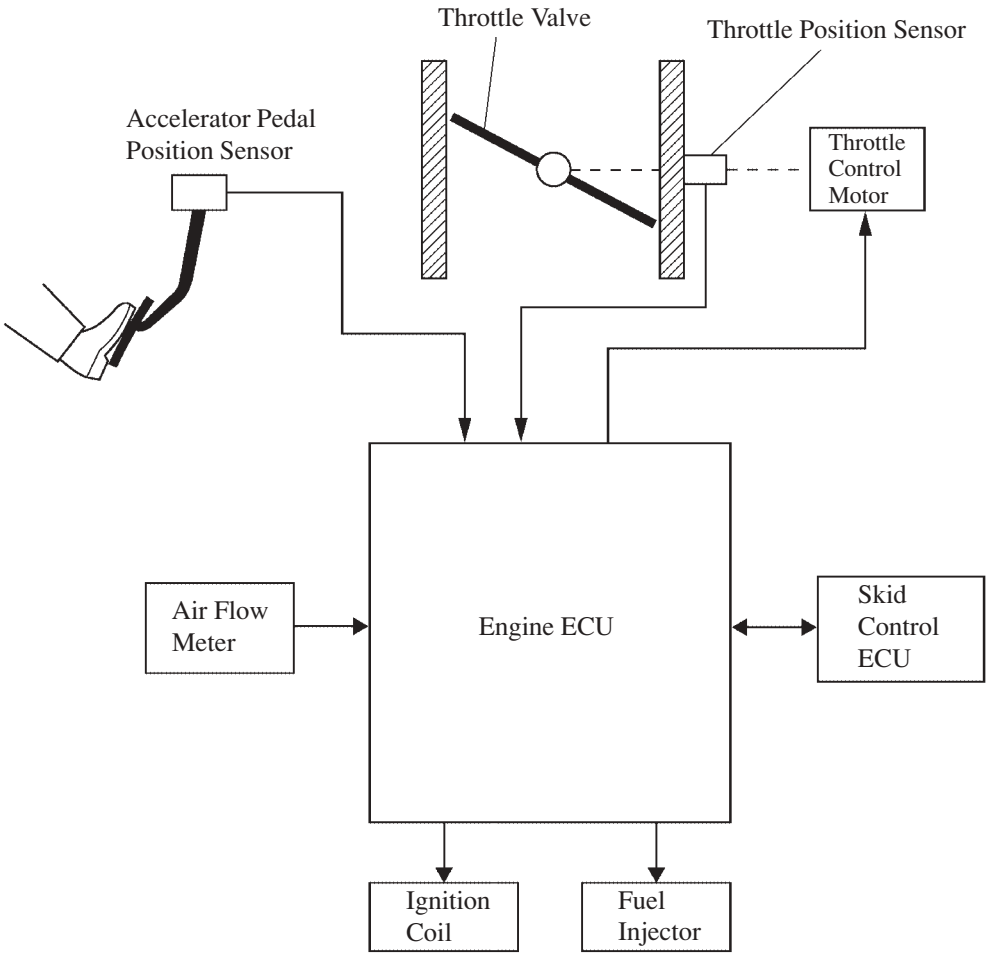

208EG44

1) Construction

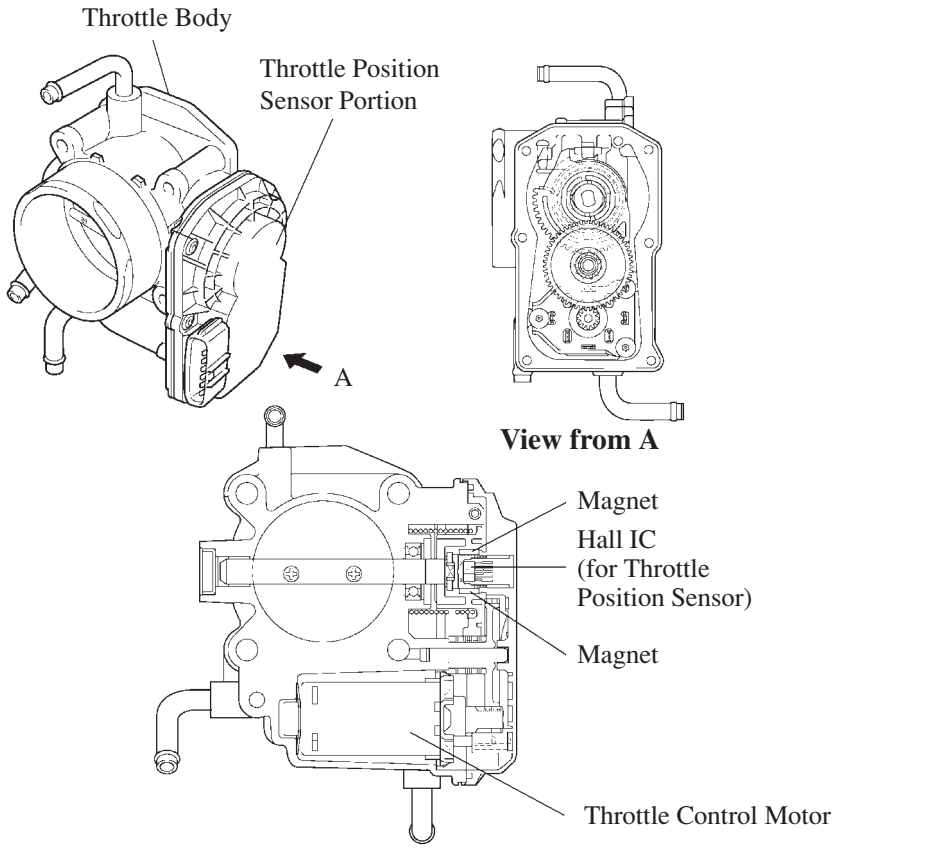

Cross Section

a. Throttle Position Sensor

The throttle position sensor is mounted on the throttle body, to detect the opening angle of the throttle valve. For details, refer to Main Components of Engine Control System section on page 437.

b. Throttle Control Motor

A DC motor with excellent response and minimal power consumption is used for the throttle control motor. The engine ECU performs the duty ratio control of the direction and the amperage of the current that flows to the throttle control motor in order to regulate the opening of the throttle valve.

2) Operation

a. General

The engine ECU drives the throttle control motor by determining the target throttle valve opening in accordance with the respective operating condition.

1) Non-Linear Control

2) Idle Speed Control

3) TRC Throttle Control

4) VSC Coordination Control

5) Cruise Control

b. Non-Linear Control

Controls the throttle to an optimal throttle valve opening that is appropriate for the driving condition such as the amount of the accelerator pedal effort and the engine speed in order to realize excellent throttle control and comfort in all operating ranges.

▶ Control Examples During Acceleration and Deceleration ◀

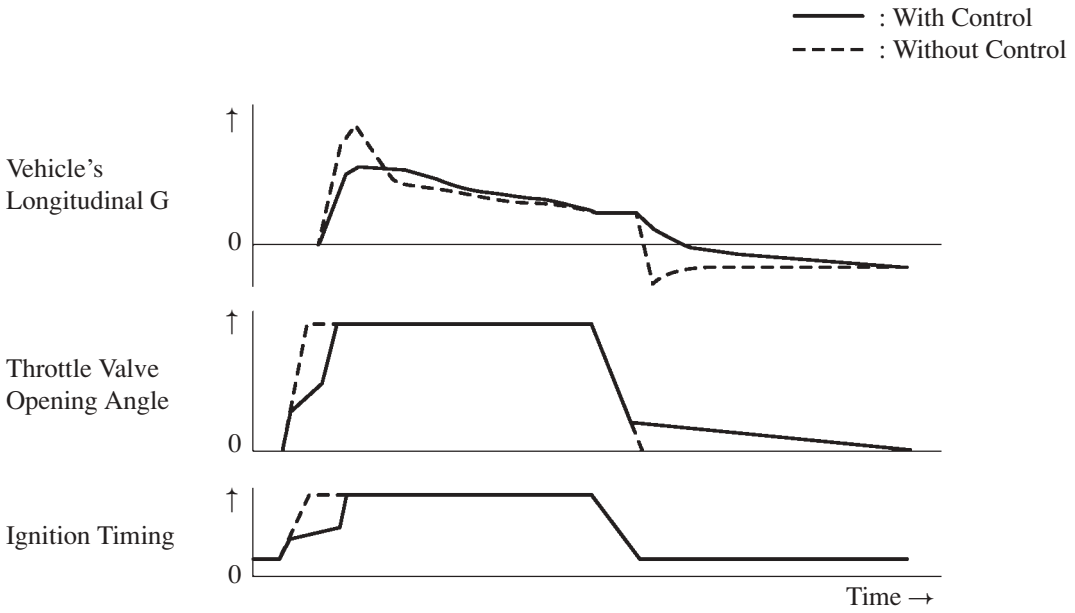

150EG37

c. Idle Speed Control

The engine ECU controls the throttle valve in order to constantly maintain an ideal idle speed.

d. TRC Throttle Control

As part of the TRC system, the throttle valve is closed by a demand signal from the skid control ECU if an excessive amount of slippage is created at a driving wheel, thus facilitating the vehicle in providing excellent stability and driving force.

e. VSC Coordination Control

In order to bring the effectiveness of the VSC system control into full play, the throttle valve opening angle is controlled by effecting a coordination control with the skid control ECU.

f. Cruise Control

An engine ECU with an integrated cruise control ECU directly actuates the throttle valve for operation of the cruise control.

3) Fail-Safe of Accelerator Pedal Position Sensor

- The accelerator pedal position sensor comprises two (main and sub) sensor circuits. If a malfunction occurs in either one of the sensor circuits, the engine ECU detects the abnormal signal voltage difference between these two sensor circuit and switches to the limp mode. In the limp mode, the remaining circuit is used to calculate the accelerator pedal opening, in order to operate the vehicle under limp mode control.

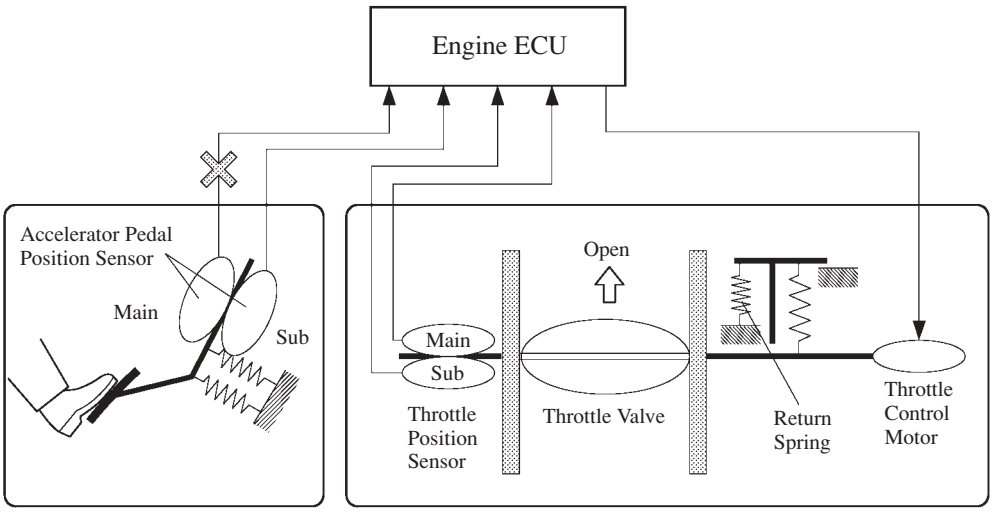

- If both circuits malfunction, the engine ECU detects the abnormal signal voltage from these two sensor circuits and discontinues the throttle control. At this time, the vehicle can be driven within its idling range.

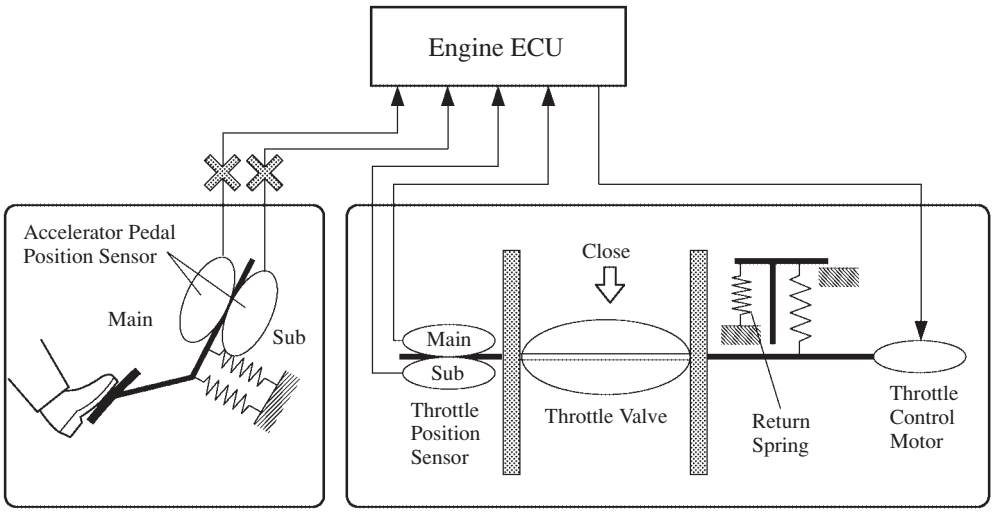

4) Fail-Safe of Throttle Position Sensor

- The throttle position sensor comprises two (main and sub) sensor circuits. If a malfunction occurs in either one of the sensor circuits, the engine ECU detects the abnormal signal voltage difference between these two sensor circuits, cuts off the current to the throttle control motor, and switches to the limp mode. Then, the force of the return spring causes the throttle valve to return and stay at the prescribed opening. At this time, the vehicle can be driven in the limp mode while the engine output is regulated through the control of the fuel injection and ignition timing in accordance with the accelerator opening.
- The same control as above is effected if the engine ECU detects a malfunction in the throttle control motor system.

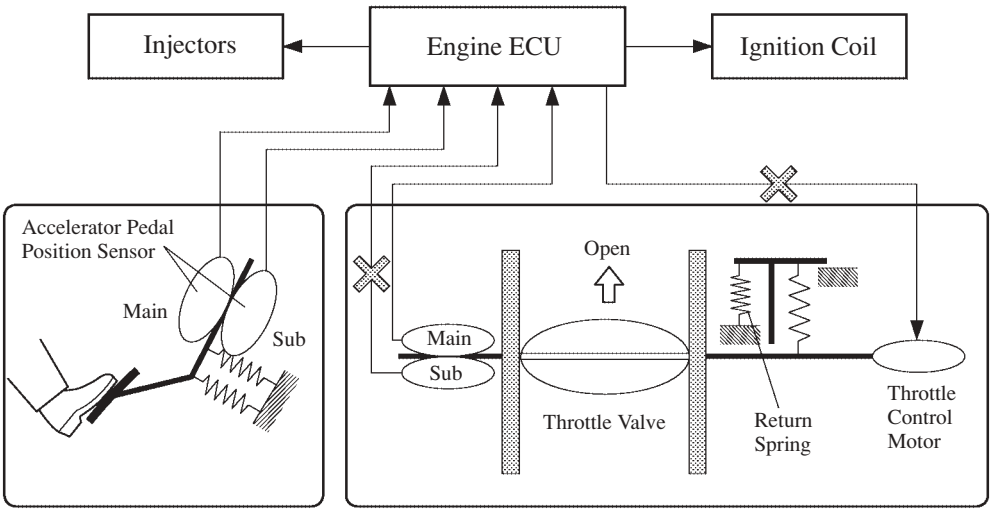

Cooling Fan Control

The cooling fan system, on the models for Europe and the G. C. C. countries, which was controlled by the water temperature switch, has been changed to engine ECU control.

- A cooling fan system in which the engine ECU controls the cooling fan speed in accordance with the signals from the water temperature sensor, etc. has been newly adopted. As a result, the water temperature switch of the previous model has been discontinued in order to simplify the system.
- The engine ECU controls the cooling fan speeds in accordance with the water temperature and the operating conditions of the A/C compressor and A/C pressure switch. This control is accomplished by operating the 2 fan motors in 2 stages through low speed (series connection) and high speed (parallel connection).

▶ Wiring Diagram ◀

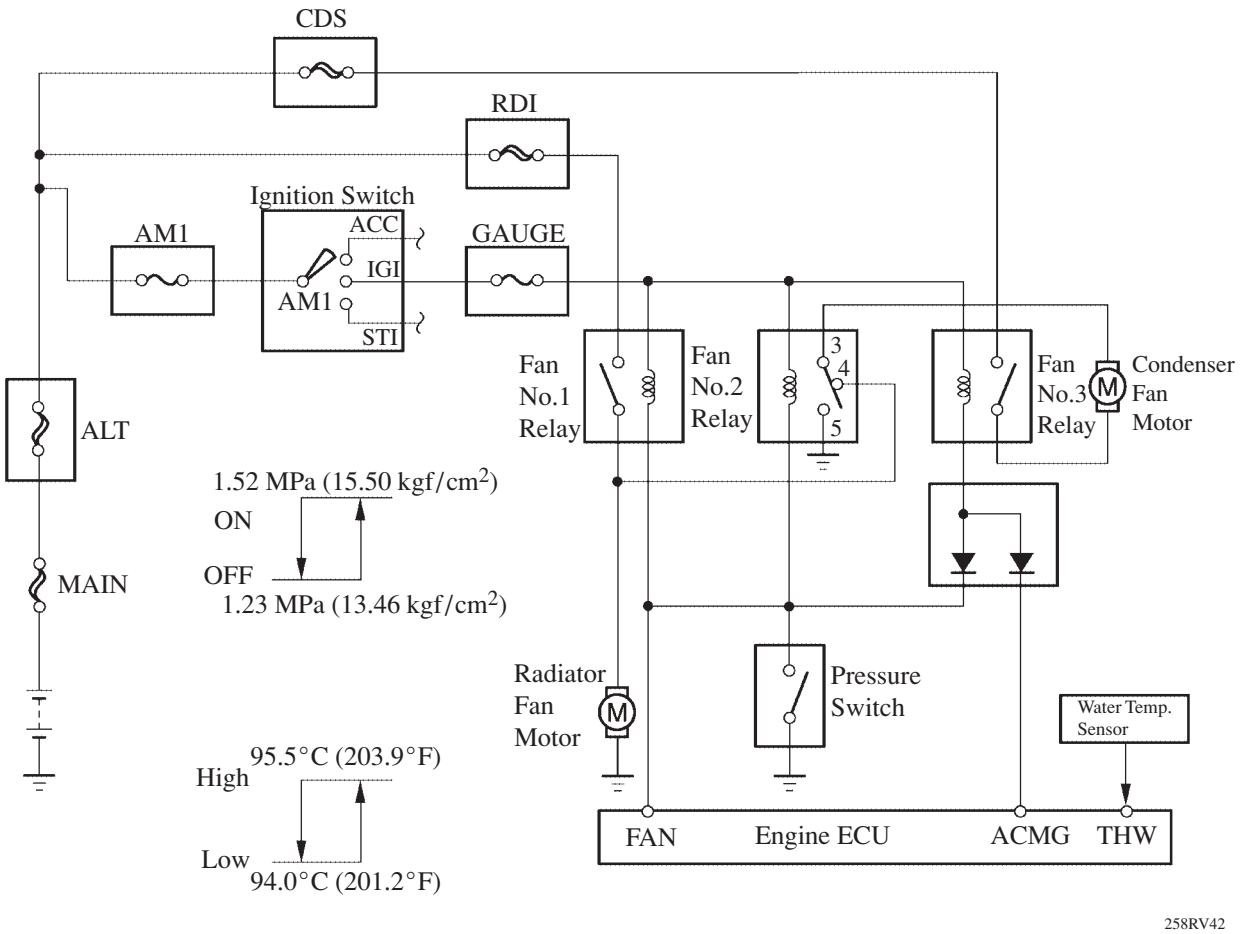

▶ Cooling Fan Operation ◀

A/C Compressor	A/C Pressure Switch	Water Temperature	Relay Operation			Cooling Fan Motor Connection	Cooling Fan Operation
			No.1	No.2	No.3		
OFF	OFF	Low	OFF	3 to 4	OFF	OFF	OFF
	OFF	High	ON	3 to 5	ON	Parallel	High
ON	OFF	Low	OFF	3 to 4	ON	Series	Low
	ON	Low	ON	3 to 5	ON	Parallel	High
	OFF	High	ON	3 to 5	ON	Parallel	High
	ON	High	ON	3 to 5	ON	Parallel	High

Purge VSV

Purge flow rate of the models for Europe has been changed from 40 liters per minute to 60 liters per minute.

Diagnosis

The ETCS-i has been adopted and some of the DTCs have been further divided into smaller detection areas than in the past. As a result, multiple DTCs (Diagnostic Trouble Codes) have been added.
The items that appear in the chart below indicate the DTCs that have been newly added.
For details, refer to the 1AZ-FE engine Repair Manual Supplement (Pub. No. RM1079E).
As a result of the adoption of the SAE controlled codes, the DTCs have been changed as described below.

▶ Diagnostic Trouble Code ◀

DTC No.	Detection Item	DTC No.	Detection Item
P0010	Camshaft Position "A" Actuator Circuit (Bank 1)	P0123	Throttle/Pedal Position Sensor/Switch "A" Circuit High Input
P0011	Camshaft position "A" – Timing Over-Advanced or System performance (Bank 1)	P0220	Throttle/Pedal Position Sensor/Switch "B" Circuit
P0012	Camshaft Position "A" – Timing Over-Retarded (Bank 1)	P0222	Throttle/Pedal Position Sensor/Switch "B" Circuit Low Input
P0016	Camshaft Position – Camshaft Position Correlation (Bank 1 Sensor A)	P0223	Throttle/Pedal Position Sensor/Switch "B" Circuit High Input
P0031	Oxygen Sensor Heater Control Circuit Low (Bank 1 Sensor 1) *	P0327	Knock Sensor 1 Circuit Low Input (Bank 1 or Single Sensor)
P0032	Oxygen Sensor Heater Control Circuit High (Bank 1 Sensor 1) *	P0328	Knock Sensor 1 Circuit High Input (Bank 1 or Single Sensor)
P0037	Oxygen Sensor Heater Control Circuit Low (Bank 1 Sensor 2)	P0339	Crankshaft Position Sensor "A" Circuit Intermittent
P0038	Oxygen Sensor Heater Control Circuit High (Bank 1 Sensor 2)	P0341	Camshaft Position Sensor "A" Circuit Range/performance (Bank 1 or Single Sensor)
P0102	Mass or Volume Air Flow Circuit Low Input	P0351	Ignition Coil "A" Primary/Secondary Circuit
P0103	Mass or Volume Air Flow Circuit High Input	P0352	Ignition Coil "B" Primary/Secondary Circuit
P0112	Intake Air Temperature Circuit Low Input	P0353	Ignition Coil "C" Primary/Secondary Circuit
P0113	Intake Air Temperature Circuit High Input	P0354	Ignition Coil "D" Primary/Secondary Circuit
P0117	Water Temperature Circuit low Input	P0443	Evaporative Emission Control System Purge Control Valve Circuit
P0118	Water Temperature Circuit High Input	P0504	Brake Switch "A"/"B" correlation
P0122	Throttle/Pedal Position Sensor/Switch "A" Circuit Low Input	P0560	System Voltage
P0604	Internal Control Module Random Access Memory (RAM) Error	P2125	Throttle/Pedal Position Sensor/Switch "E" Circuit
P0606	ECU/PCM Processor	P2127	Throttle/Pedal Position Sensor/Switch "E" Circuit Low Input
P0607	Control Module Performance	P2128	Throttle/Pedal Position Sensor/Switch "E" Circuit High Input
P0617	Starter Relay Circuit High	P2135	Throttle/Pedal Position Sensor/Switch "A"/"B" Voltage Correlation

(Continued)

*: Although the title(DTC description) says "oxygen sensor", this DTC is related to the "air fuel ratio sensor".

DTC No.	Detection Item	DTC No.	Detection Item
P0657	Actuator Supply Voltage Circuit/Open	P2138	Throttle Pedal Position Sensor/Switch "D"/"E" Voltage Correlation
P2102	Throttle Actuator Control Motor Circuit Low	P2195	Oxygen Sensor Signal Stuck Lean (Bank 1 Sensor 1) *
P2103	Throttle Actuator Control Motor Circuit High	P2196	Oxygen Sensor Signal Stuck Rich (Bank 1 Sensor 1) *
P2111	Throttle Actuator Control System – Stuck Open	P2237	Oxygen Sensor Pumping current Circuit/Open (for A/F sensor) (Bank 1 Sensor 1)
P2112	Throttle Actuator Control System – Stuck Closed	P2238	Oxygen Sensor Pumping current Circuit/Low (for A/F sensor) (Bank 1 Sensor 1)
P2118	Throttle Actuator Control Motor Current Range/Performance	P2239	Oxygen Sensor Pumping current Circuit/High (for A/F sensor) (Bank 1 Sensor 1)
P2119	Throttle Actuator Control Throttle Body Range/Performance	P2251	Oxygen Sensor Reference Ground Circuit/Open (for A/F sensor) (Bank 1 Sensor 1)
P2120	Throttle/Pedal Position Sensor/Switch "D" Circuit	P2252	Oxygen Sensor Reference Ground Circuit Low (for A/F sensor) (Bank 1 Sensor 1)
P2121	Throttle/Pedal Position Sensor/Switch "D" Circuit Range/Performance	P2253	Oxygen Sensor Reference Ground Circuit High (for A/F sensor) (Bank 1 Sensor 1)
P2122	Throttle/Pedal Position Sensor/Switch "D" Circuit Low Input	P2A00	Air Fuel Ratio Sensor Circuit Slow Response (Bank 1 Sensor 1)
P2123	Throttle/Pedal Position Sensor/Switch "D" Circuit High Input	B2799	Engine Immobilizer System Malfunction

*: Although the title (DTC description) says "oxygen sensor", this DTC is related to the "air fuel ratio sensor".

Fail-Safe

When the engine ECU detects a malfunction, the engine ECU stops or controls the engine according to the data already stored in the memory.

▶ Fail-Safe Control List ◀

Location on Malfunction	Description Control
Air Flow Meter	In case of a single malfunction, the engine could operate poorly or the catalyst could overheat if the engine continues to be controlled with the signals from the sensors. Therefore, the engine ECU effects control by using the values in the engine ECU or stops the engine.
Accelerator Pedal Position Sensor (For details, see page 436)	In a case of a signal malfunction, the engine ECU calculates the accelerator pedal opening angle that is limited by the dual system sensor value and continues effecting throttle valve control. If both system malfunction, the engine ECU considers that the accelerator pedal is fully closed.
Throttle Position Sensor (For details, see page 437)	In a case of signal malfunction, the engine ECU cuts off the current to the throttle control motor. The throttle valve returns to the prescribed opening by the force of the return spring. The engine ECU then adjusts the engine output by controlling the fuel injection and ignition timing in accordance with the accelerator pedal opening angle to enable the vehicle to continue driving.
Water Temp. Sensor and Intake Air Temp. Sensor	In a case of signal malfunction, the use of the values from the sensors will make the air-fuel ratio become too rich or too lean, which could causes the engine to stall or to run poorly during cold operation. Therefore, the engine ECU fixes the air-fuel ratio to the stoichiometric ratio and uses the constant values of 80°C water temperature and 20°C intake air temperature to perform the calculation.
Knock Sensor	In a case of signal malfunction in the knock sensor or in the knocking signal system (open or short circuit), the engine could become damaged if the timing is advanced despite the presence of knocking. Therefore, if a malfunction is detected in the knock sensor system, the engine ECU turns the timing retard correction of the knock sensor into the maximum retard value.
Ignition Coil (with Igniter)	In a case of signal malfunction in the ignition system, such as an open circuit in the ignition coil, the catalyst could become overheated due to engine misfire. Therefore, if the (IGf) ignition signal is not input twice or more in a row, the engine ECU determines that a malfunction occurred in the ignition system and stops only the injection of fuel into the cylinder with the malfunction.
Camshaft Position Sensor	In case of a signal malfunction (open or short circuit) or a mechanical malfunction, the engine ECU stops the VVT-i control.

■2AZ-FE ENGINE

1. General

- The 1AZ-FE engine has been discontinued on the models for Australia. Instead, a 2AZ-FE engine has been introduced.
- The 2AZ-FE engine, which is an in-line, 4-cylinder, 2.4-liter, 16-valve DOHC engine, has greater bore and stroke than the 1AZ-FE engine.
- This engine has following features that have been adapted in order to realize the further improvement of the engine performance and to reduce exhaust emissions.
  - – Meets the STEP II regulation requirements.
  - – ETCS-i (Electronic Throttle Control System-intelligent) has been adopted.

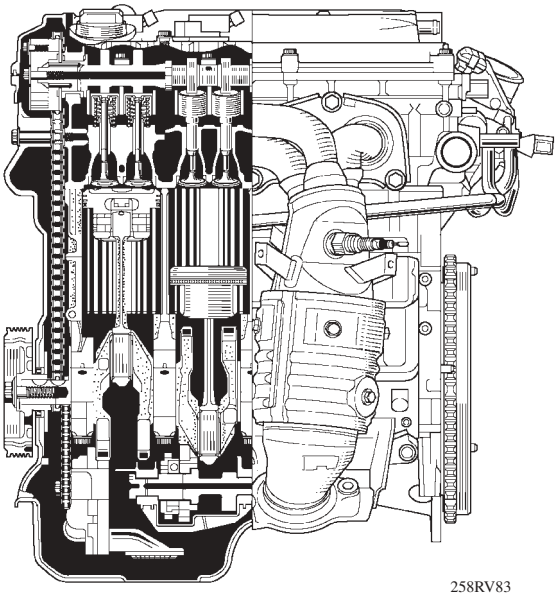

258RV83

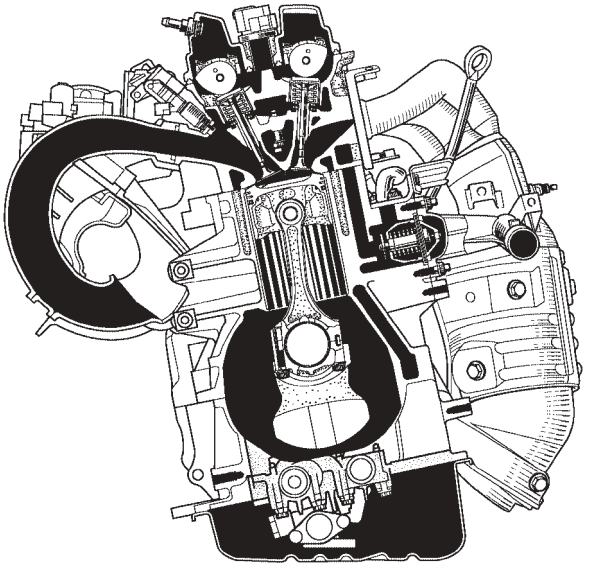

258RV33

▶ Engine Specifications ◀

Model		New	Previous
Engine Type		2AZ-FE	1AZ-FE
No. of Cyls. & Arrangement		4-Cylinder, In-line	←
Valve Mechanism		16-Valve DOHC, Chain Drive (with VVT-i)	←
Combustion Chamber		Pentroof Type	←
Manifolds		Cross-Flow	←
Fuel System		EFI	←
Displacement	cm^3 (cu. in.)	2362 (144.2)	1988 (121.9)
Bore x Stroke	mm (in.)	88.5 x 96.0 (3.48 x 3.78)	86.0 x 86.0 (3.39 x 3.39)
Compression Ratio		9.6 : 1	9.8 : 1
Max. Output	(EEC)	120 kW @ 5600 rpm	110 kW@ 6000 rpm
Max. Torque	(EEC)	224 N·m @ 4000 rpm	192 N·m @ 4000 rpm
Oil Grade		API SJ, SL, EC or ILSAC	API SJ, EC or ILSAC
Emission Regulation		European STEP II	ADR37

▶ Valve Timing ◀

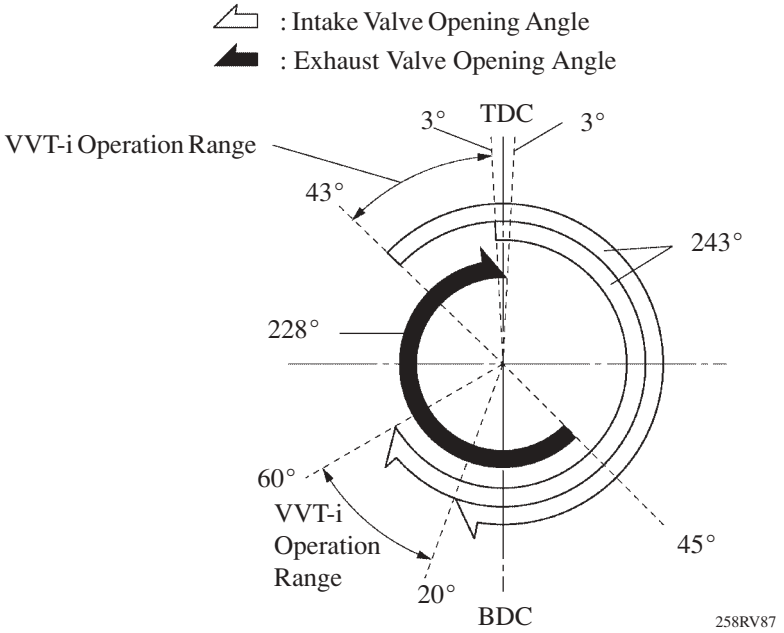

2. Feature of 2AZ-FE Engine

The 2AZ-FE engine has been able to achieve the following performance through the adoption of the item listed below.

(1) High performance and good fuel economy

(2) Low noise and vibration

(3) Lightweight and compact design

(4) Good serviceability

(5) Clean emission

Item	(1)	(2)	(3)	(4)	(5)
The VVT-i system is used.	○				○
The ETCS-i has been newly adopted.	○				
A cylinder block made of aluminum alloy along with a magnesium head cover has been adopted.			○		
The taper squish shape has been adopted for the piston head.	○				○
The DIS (Direct Ignition System) makes ignition timing adjustment unnecessary.	○			○	○
A serpentine belt drive system has been adopted, and the brackets and the engine have been integrated.			○	○	
Timing chain has been used.			○	○	
The fuel returnless system has been adopted.			○	○	○
Quick connectors are used to connect the fuel hose with the fuel pipes.				○	
12-hole type fuel injectors with high atomizing performance have been adopted.	○				○
Iridium-tipped spark plugs have been adopted.	○			○	
Intake manifold made of plastic has been adopted.			○		
A thin-wall, high-cell density ceramic type TWC (Three-Way Catalytic Converter) has been adopted.					○
The 2-way exhaust control system has been adopted in main muffler.		○			
The use of an air fuel ratio sensor allows precise control.					○
A resin gear balance shaft has been adopted.		○	○		

3. Major Difference

The major difference between the 2AZ-FE engine on the new RAV4 and the 1AZ-FE engine on the previous RAV4 are the following:

System		Features
Engine Proper	Cylinder Block	● The cylinder bore has been changed.
	Piston	● The piston diameter has been increased.
	Crankshaft	● The balance shaft drive gear has been installed onto the crankshaft. ● A balance shaft has been adopted.
Valve Mechanism		● The cam profile has been changed in conjunction with the change in the valve timing.
Cooling System		● The TOYOTA genuine Super Long Life Coolant has been adopted.
Intake and Exhaust system		● The link-less type throttle body has been adopted. ● A high temperature resistant exhaust manifold with an integrated TWC (Three-Way Catalytic Converter) has been adopted. ● The 2 startup converters have been changed to a single startup converter. ● The exhaust pipe system has adopted an under floor catalyst, and a double-wall pipe upstream of the catalyst.
Fuel System		● The 12-hole type injector has been improved.
Charging System		● The segment conductor type alternator has been adopted in the automatic transaxle model.
Engine Control System		● The ETCS-i (Electronic Throttle Control system-intelligent) has been adopted. ● The planar type air fuel ratio sensor has been adopted. ● The no-contact sensor has been adopted in the throttle position sensor. ● The linear type accelerator position sensor has been adopted. ● The number of the air fuel ratio sensor and the oxygen sensor become one.
Diagnosis		● Along with the adoption of the ETCS-i, the DTCs (Diagnostic Trouble Codes) have been added.

4. Engine Proper

Cylinder Head Cover

- A lightweight magnesium alloy diecast cylinder head cover is used.
- The cylinder head cover gasket and the spark plug gasket have been integrated to reduce the number of parts.

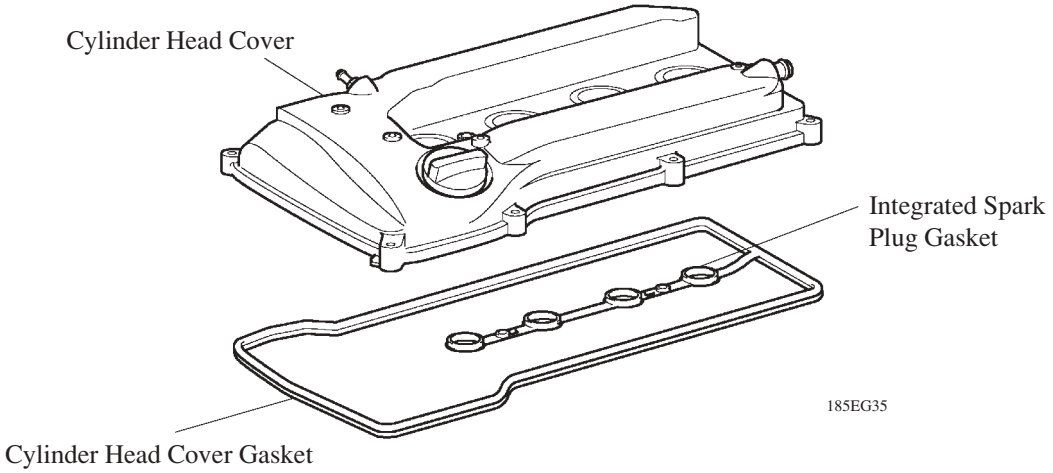

Cylinder Head Gasket

- A steel-laminate type cylinder head gasket has been adopted.

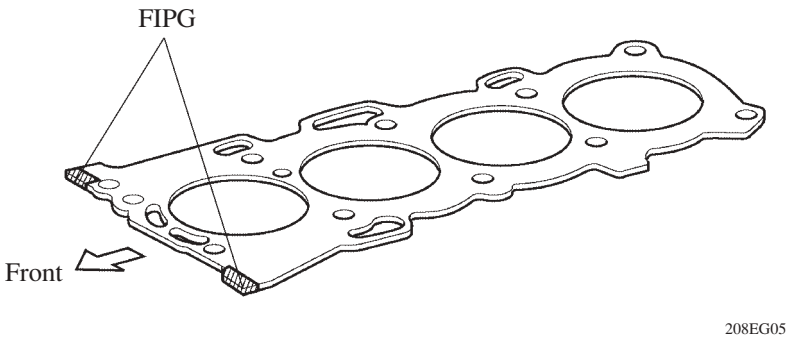

Cylinder Head

- The taper squish combustion chamber has been used to realize the highly engine's knocking resistance and fuel efficiency.
- An upright intake port has been used to realize the highly intake efficiency.
- Installing the injectors in the cylinder head enables the injectors inject fuel as close as possible to the combustion chamber. This prevents the fuel from adhering to the intake port walls, which reduces HC exhaust emissions.
- The routing of the water bypass jacket in the cylinder head has been optimized to realize the highly cooling performance. In addition, a water bypass passage has been provided below the exhaust ports to reduce the number of parts and to achieve weight reduction.

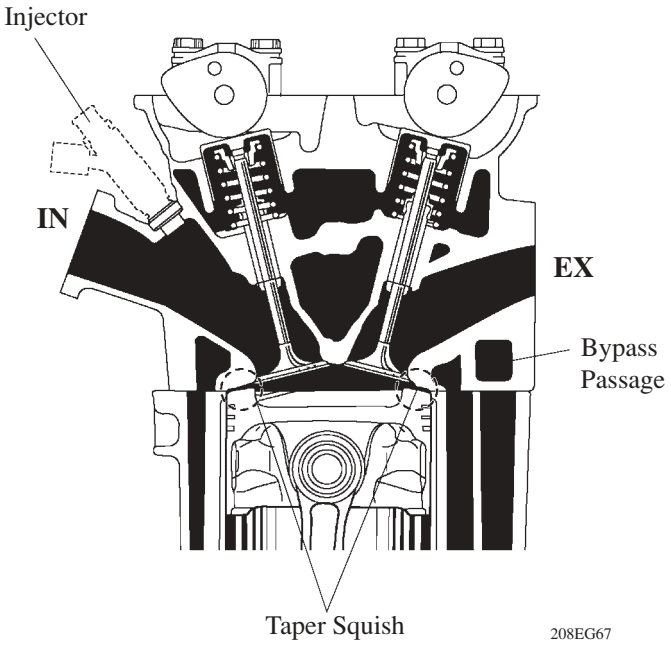

A – A Cross Section

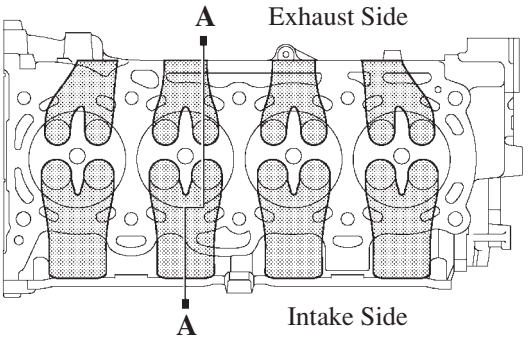

View from the Back Side

Cylinder Block

- Lightweight aluminum alloy is used for the cylinder block.
- By producing the thin cast-iron liners and aluminum alloy cylinder block as a unit realizes the compact design. The liner is thin, so that boring is not possible.
- Passage holes are provided in the bulkhead of the cylinder block. As a result, the air at the bottom of the cylinder flows smoother, and pumping loss (back pressure at the bottom of the piston generated by the piston's reciprocal movement) is reduced.
- The oil filter and the air conditioner compressor bracket are integrated the crankcase, also the water pump swirl camber, the thermostat housing and the rear oil seal retainer integrated the cylinder block.

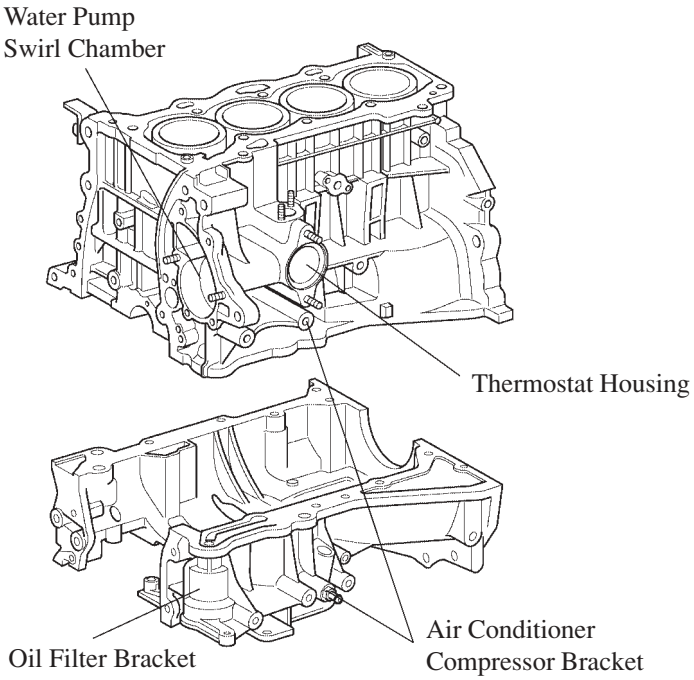

185EG42

▶ Air Flow During Engine Revolution ◀

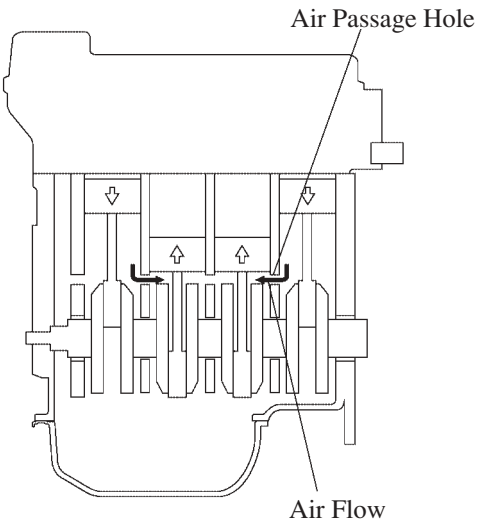

179EG04

Piston

- The piston is made of aluminum alloy and skirt area is made compact and lightweight.
- The piston head portion has adopted a taper squish shape.
- The piston skirt has been coated with resin.
- Full floating type piston pins are used.
- By increasing the machining precision of the cylinder bore diameter, the outer diameter of the piston has been made into one type.

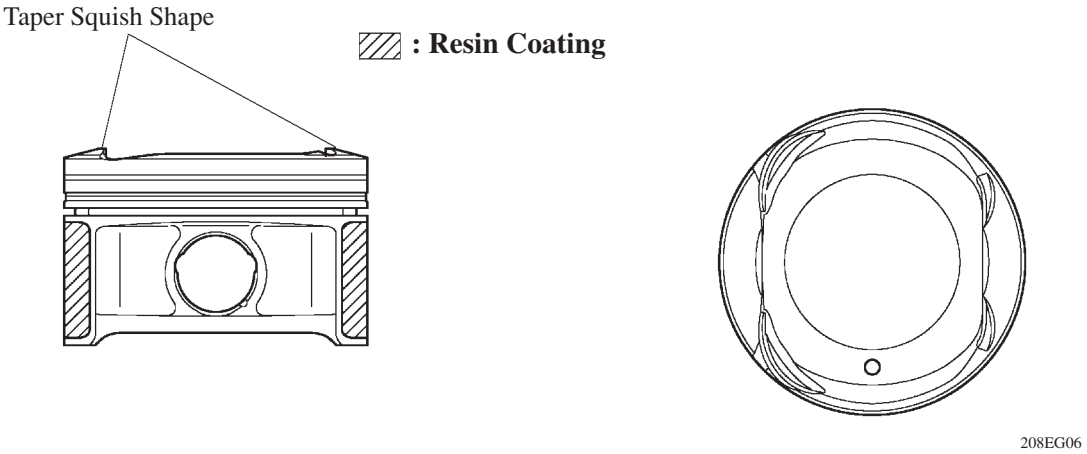

View from the Top Side

Connecting Rod

- The connecting rods and caps are made of high strength steel for weight reduction.
- Nutless-type plastic region tightening bolts of the connecting rod are adopted for a lighter design.

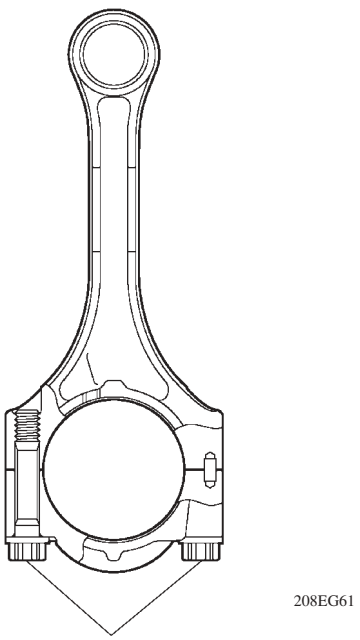

Plastic Region Tightening Bolts

Crankshaft

- The crankshaft has 5 journals and 8 balance weight.
- The precision and surface roughness of the pins and journal have been realized to reduce friction.
- The balance shaft drive gear has been installed onto the crankshaft.
- The crankshaft is made of forged steel.

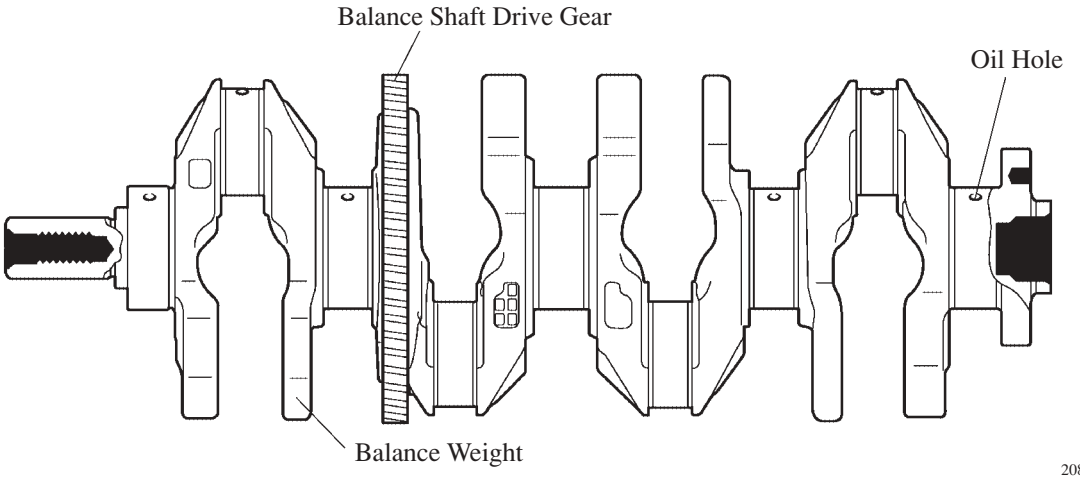

Balance Shaft

- A balance shaft has been adopted to reduce vibrations.
- A direct-drive system has been adopted which makes use of gear that is installed onto the counterweight of crankshaft.
- In addition, a resin gear has been adopted on the driven side to suppress noise and offer lightweight design.

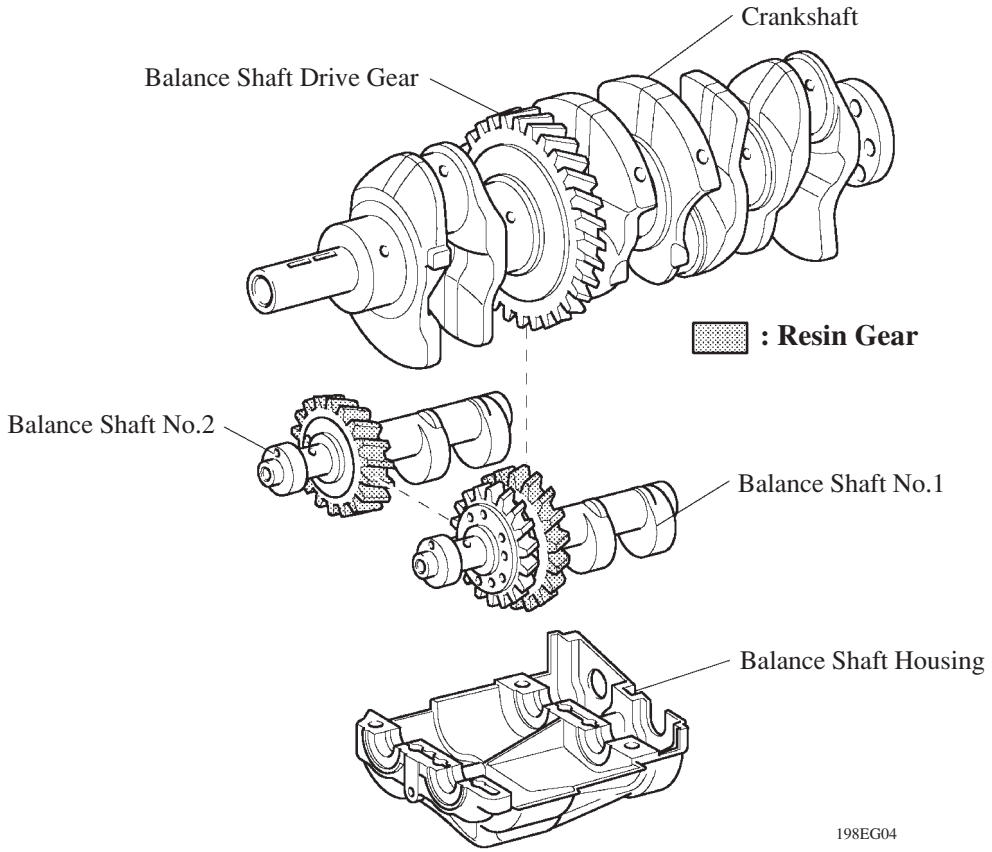

5. Valve Mechanism

General

- Each cylinder is equipped with 2 intake valves and 2 exhaust valves. Intake and exhaust efficiency has been increased due to the larger total port areas.
- The valves are directly opened and closed by 2 camshafts.
- The intake and exhaust camshafts are driven by a chain. The VVT-i system used for the intake camshaft is used to realize good fuel economy and engine performance and to reduce exhaust emissions. For details, see page 479 in the VVT-i system section.
- The shimless type valve lifter is used.

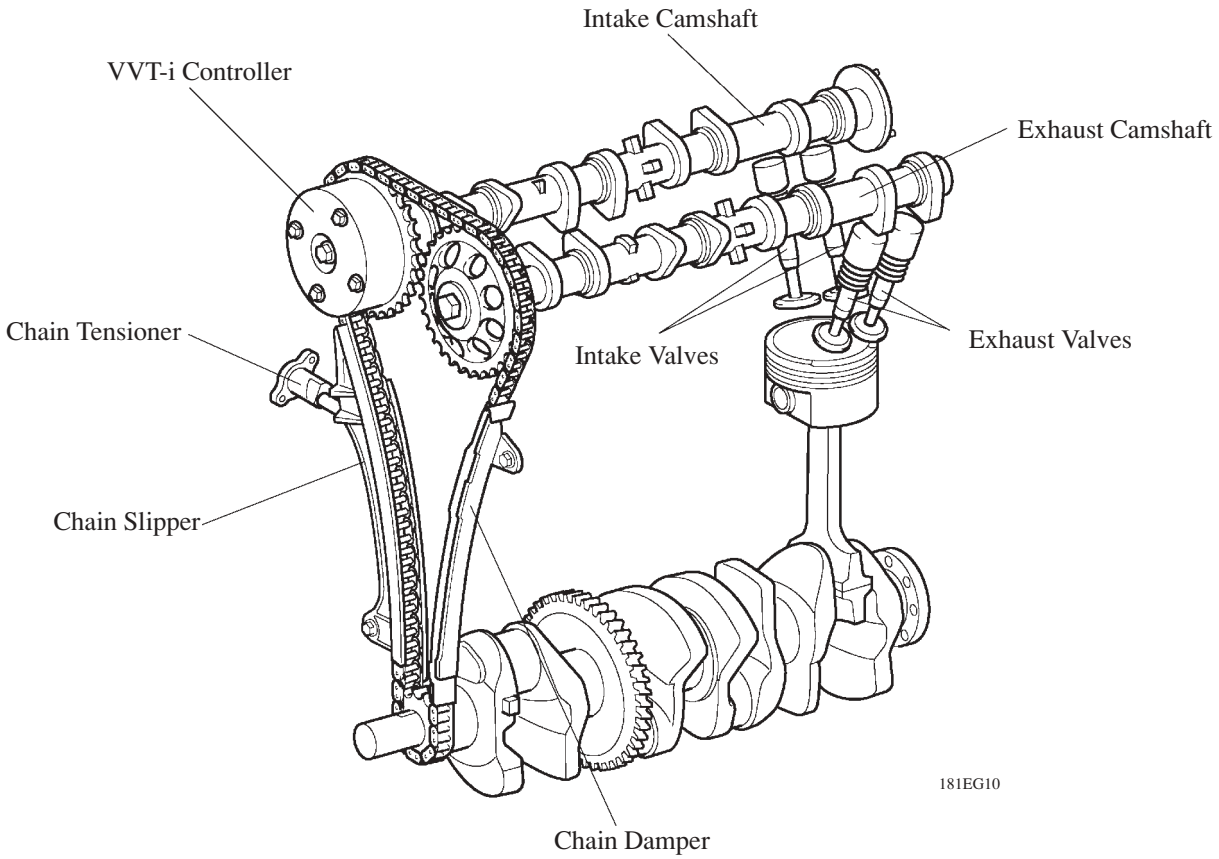

Camshaft

- The intake camshaft is provided with timing rotor to trigger the camshaft position sensor.
- In conjunction with the adoption of the VVT-i system, an oil passage is provided in the intake camshaft in order to supply engine oil pressure to the VVT-i system.
- A VVT-i controller has been installed on the front of the intake camshaft to vary the timing of the intake valves.

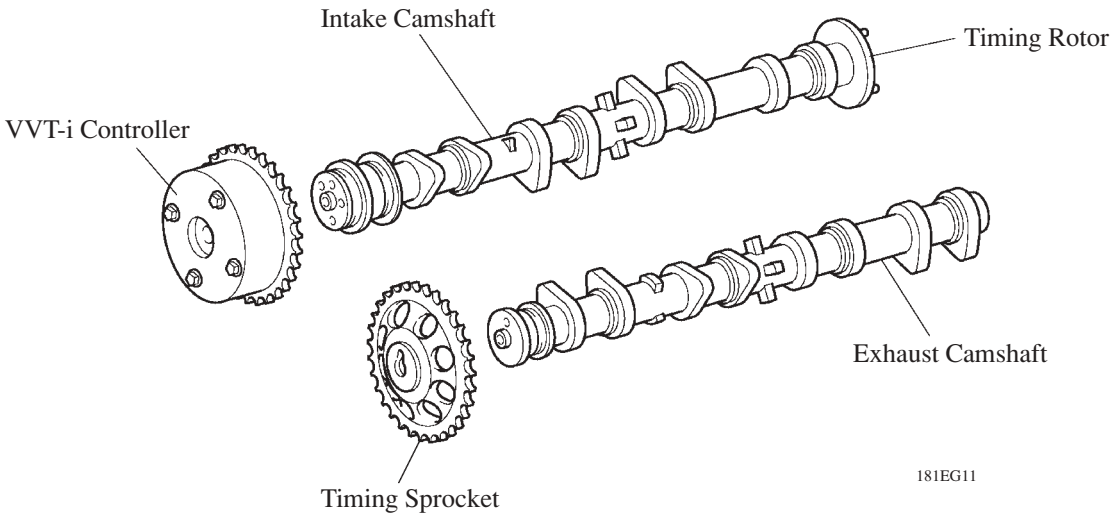

Intake and Exhaust Valves

- Intake and exhaust valves with large-diameter valve face have been adopted to improve the intake air and exhaust gas flow.
- Narrow valves stems have been adopted to reduce the intake and exhaust resistance and for weight reduction.

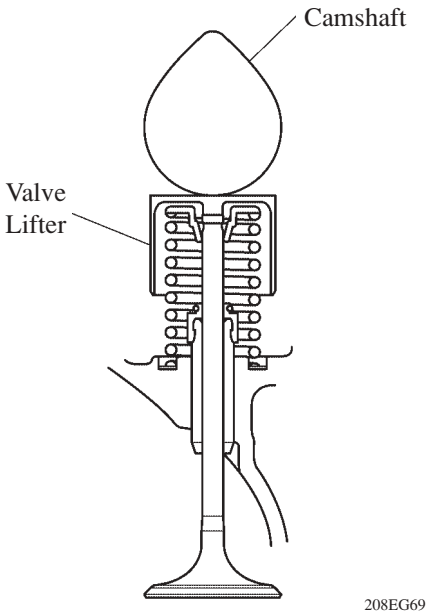

- Along with the increased amount of valve lift, shimless valve lifters that provided a large cam contact surface have been adopted. The adjustment of the valve clearance is accomplished by selecting and replacing the appropriate valve lifters.

Service Tip

The valve lifters are available in 35 size increment of 0.020 mm (0.008 in.), from 5.60 mm (0.199 in.) to 5.740 mm (0.266 in.).
For details, refer to the 2AZ-FE engine Repair Manual Supplement (Pub. No. RM1079E).

Timing Chain

- A roller chain with 8 mm pitch has been adopted.
- The timing chain is lubricated by oil jet.

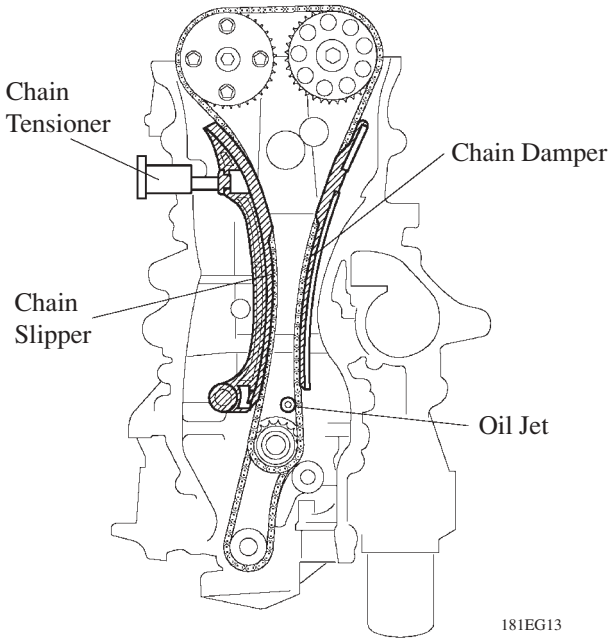

Chain Tensioner

- The chain tensioner uses a spring and oil pressure to maintain proper chain tension at all time. The chain tensioner suppresses noise generated by the chain.
  A ratchet type non-return mechanism is also used.
- To improve serviceability, the chain tensioner is constructed so that it can be removed and installed from the outside of the timing chain cover.

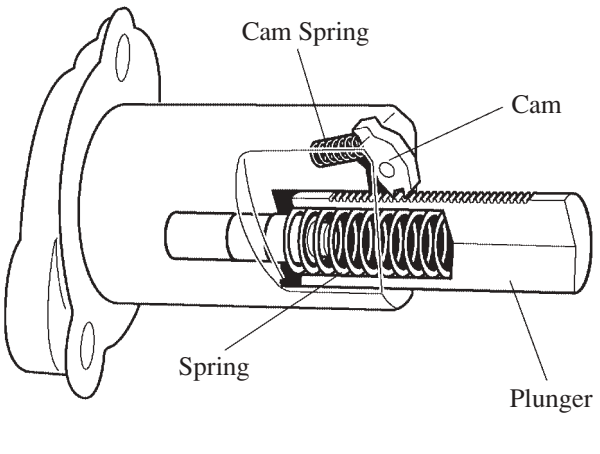

6. Lubrication System

General

- The lubrication circuit is fully pressurized and oil passes through an oil filter.
- The trochoidal type oil pump is chain-driven by the crankshaft.
- The oil filter is attached downward from the crankcase to improve serviceability.
- Along with the adoption of the VVT-i system, the cylinder head is provided with a VVT-i controller and a camshaft timing oil control valve. This system is operated by the engine oil.

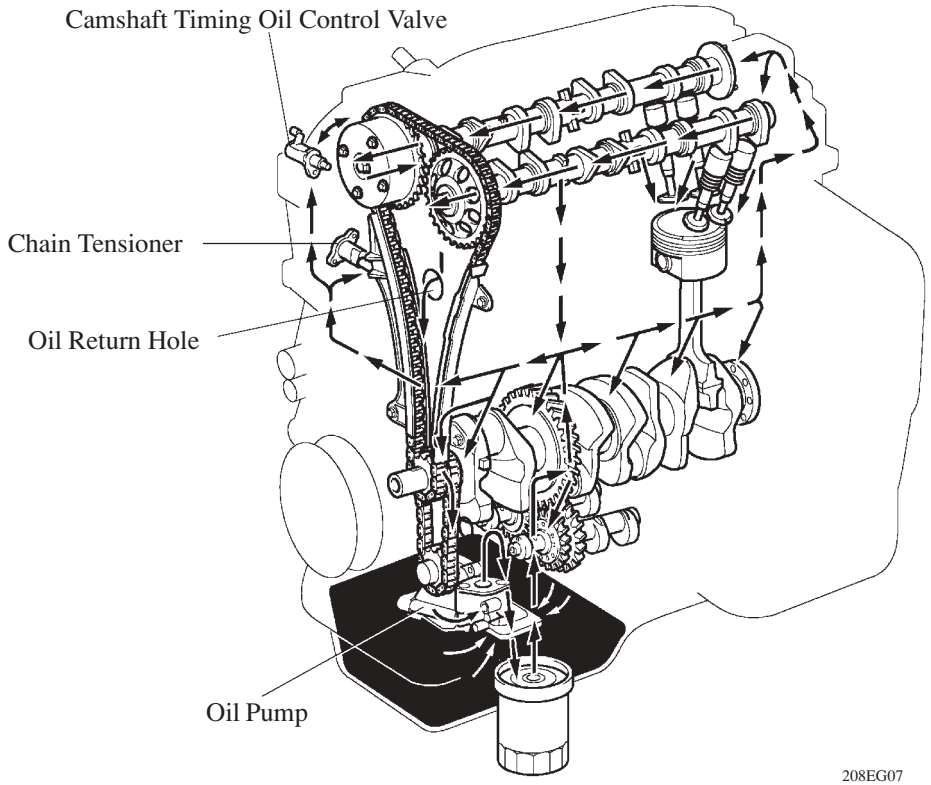

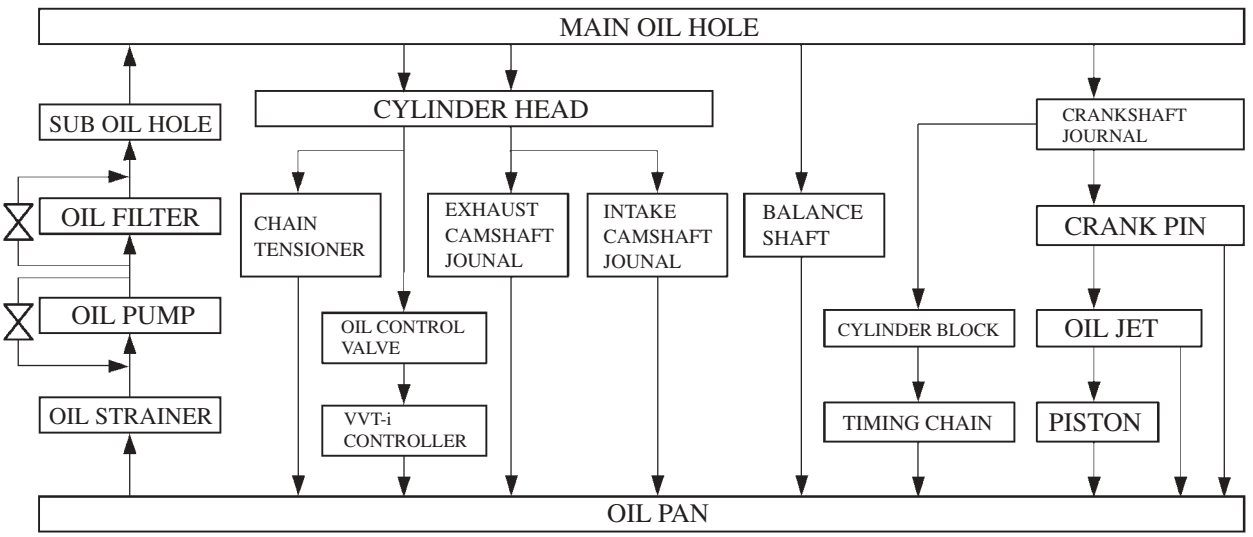

▶ Specifications ◀

Oil Capacity	Dry	4.5 liters (4.8 US qts, 4.0 Imp. qts)
	with Oil Filter	3.8 liters (4.0 US qts, 3.3 Imp. qts)
	without Oil Filter	3.6 liters (3.8 US qts, 3.2 Imp. qts)

Oil Pump

- The trochoidal type oil pump is chain driven by the crankshaft, and fits compactly inside the timing chain cover.
- Friction has been reduced by means of 2 relief holes in the internal relief system.

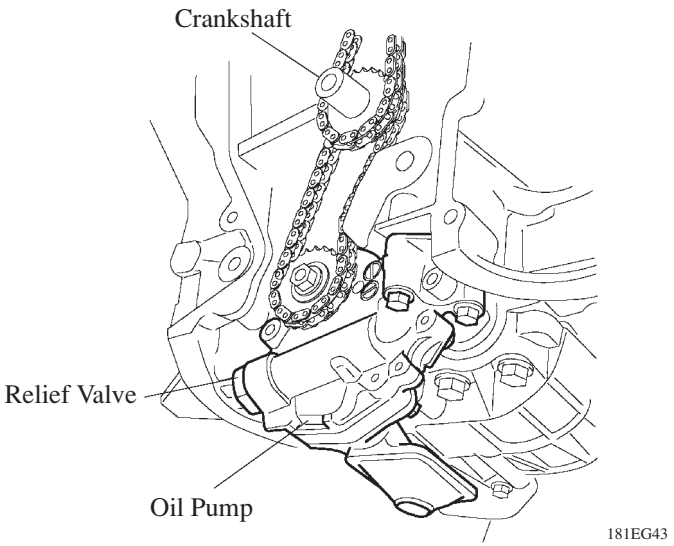

7. Cooling System

- The cooling system is a pressurized, forced-circulation type.
- A thermostat with a bypass valve is located on the water inlet housing to maintain suitable temperature distribution in the cooling system.
  This prevents sudden jumps in temperature while the engine is warming up.
- The flow of the engine coolant makes a U-turn in the cylinder block to ensure a smooth flow of the engine coolant. In addition, a bypass passage is enclosed in the cylinder head and the cylinder block.
- Warm water from the engine is sent to the throttle body to prevent freeze-up.

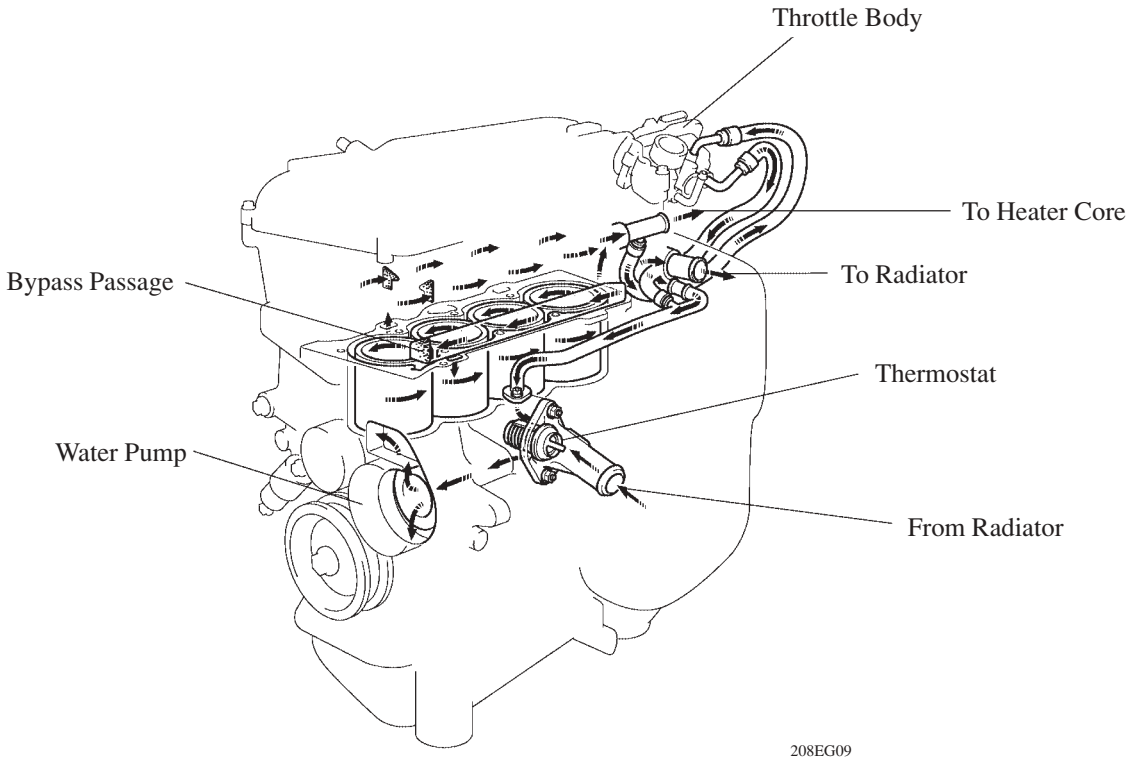

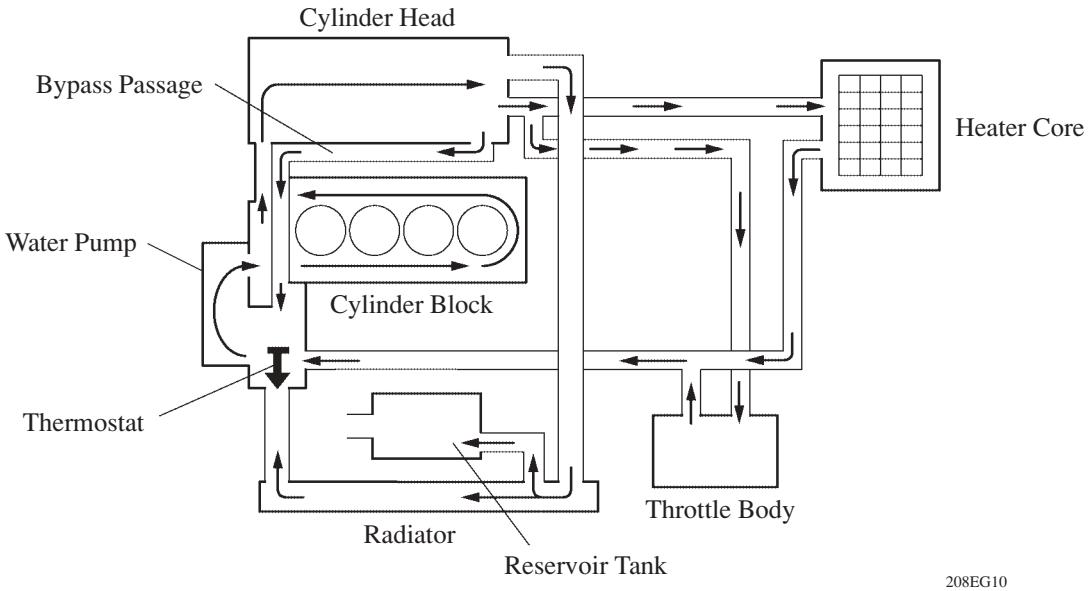

▶ Specifications ◀

Engine Coolant	Capacity liters (US qts, Imp. qts)	M/T	6.6 (7.0, 5.8)
		A/T	6.8 (7.2, 6.0)
	Type	TOYOTA Super Long Life Coolant	
Thermostat	Opening Temperature °C (°F)	80 – 84 (176 – 183)	

Super Long Life Coolant

Genuine Toyota SLLC (Super Long Life Coolant) has been adopted. As a result, the maintenance interval has been extended. For detailed specifications, refer to page 417.

8. Intake and Exhaust System

General

- The adoption of ETCS-i (Electronic Throttle Control System-intelligent) has realized excellent throttle control.
- The intake manifold has been made of plastic to reduce the weight and the amount of heat transferred from the cylinder head.
- 2-way exhaust control system is provided to reduce noise and vibration in the main muffler.

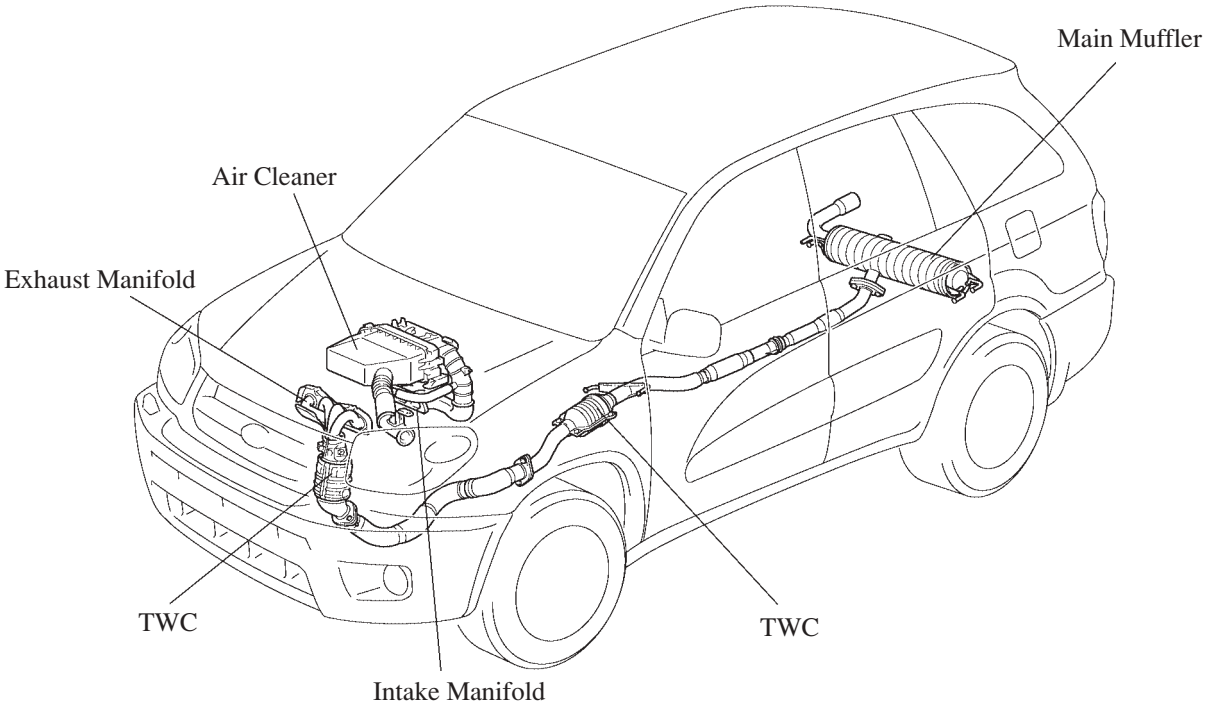

258RV34

Air Cleaner

- A flameless, full-fabric air filter has been adopted to reduce weight and to simplify its disposal.

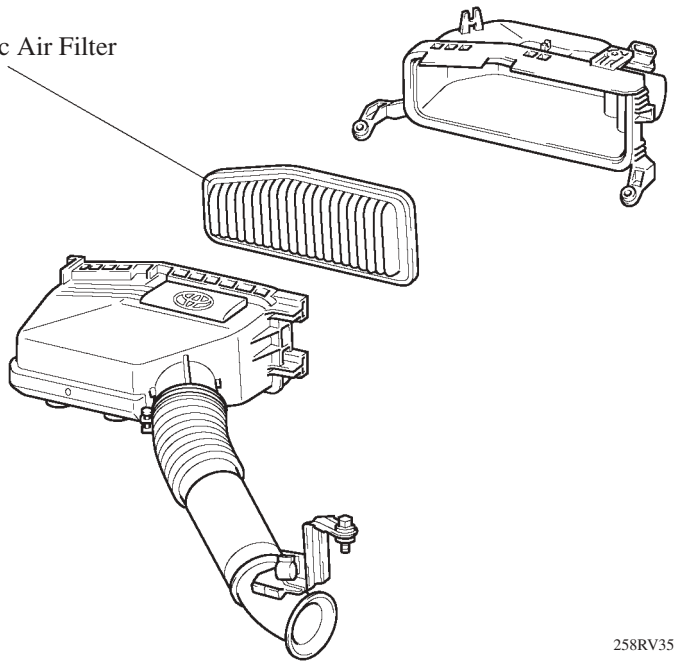

Throttle Body

- An electronic throttle body with a built-in throttle position sensor and a throttle control motor has been adopted.
- The adoption of the link-less type ETCS-i has realized excellent throttle control.
  For details of ETCS-i control, refer to page 438.
- A DC motor with excellent response and minimal power consumption is used for the throttle control motor. The ECU performs the duty ratio control of the direction and the amperage of the current that flows to the throttle motor in order to regulate the opening angle of the throttle valve.
- For details on the throttle position sensor control, which are the same as on the 1AZ-FE engine, refer to page 437.

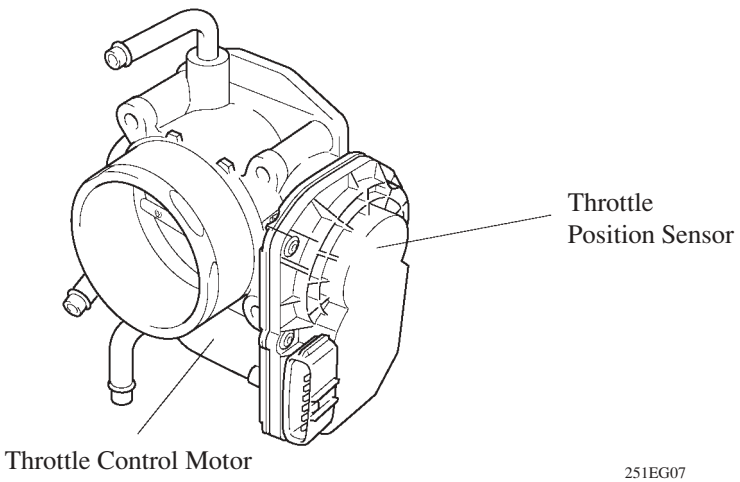

Intake Manifold

- The intake manifold has been made of plastic to reduce the weight and the amount of heat transferred from the cylinder head. As a result, it has become possible to reduce the intake air temperature and improve the intake volumetric efficiency.
- A resonator is installed inside the air intake chamber which makes use of the intake pulse to improve torque in the mid-speed range.
- The intake manifold cover is used on the intake manifold to reduce intake air noise.

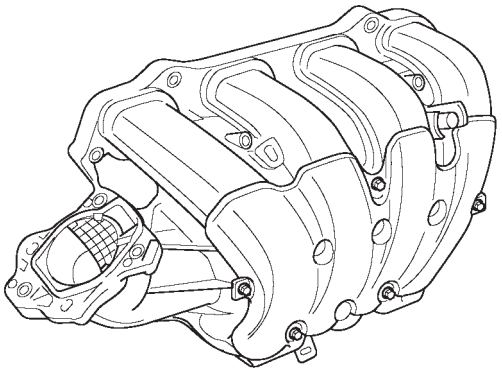

198EG34

Exhaust Manifold

- A stainless steel exhaust manifold is used for weight reduction.
- A single pipe has been adopted for the startup converter case in order to improve the warm-up performance of the catalyst and reduce exhaust emissions during starting.

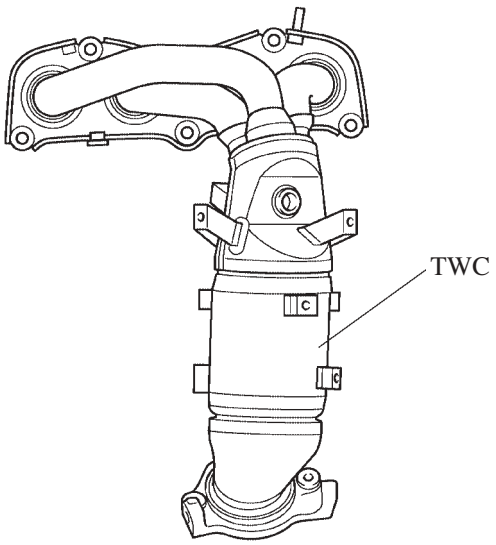

258RV36

Three-Way Catalytic Converter

- The ceramic type TWC (Three-Way Catalytic Converter) has been adopted directly below the exhaust manifold and under floor. This TWC enables to improve exhaust emissions by optimizing the cell's density and the wall thickness.

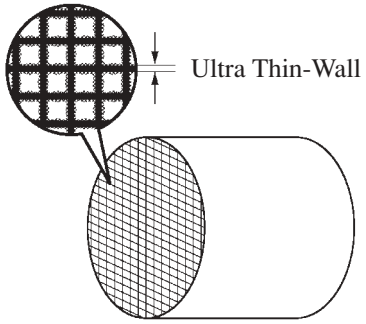

198EG06

Exhaust Pipe

- To comply with the STEP-III exhaust emission regulations, an under floor catalyst has been adopted, and the pipe upstream from the catalyst has been changed to a double-wall construction.
- To improve the power performance of the engine, a 2-way exhaust control system which is same as the 1AZ-FE engine has been adopted in the main muffler.

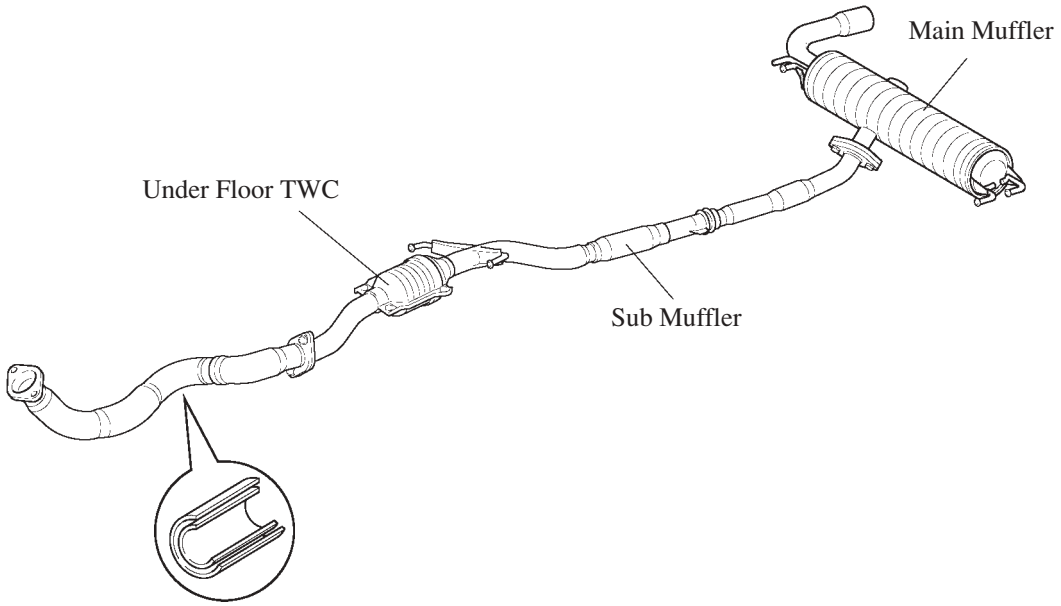

258RV27

9. Fuel System

General

- A fuel returnless system has been used to reduce evaporative emissions.
- A compact fuel pump in which a fuel filter and pressure regulator are integrated in the module fuel pump assembly has been adopted.
- A quick connector has been adopted to connect the fuel pipe with the fuel hose to improve serviceability.
- The aluminum die-cast delivery pipe has been integrated with the pulsation damper.
- Newly designed, 12-hole, ultra-fine mist type injectors have been adopted.

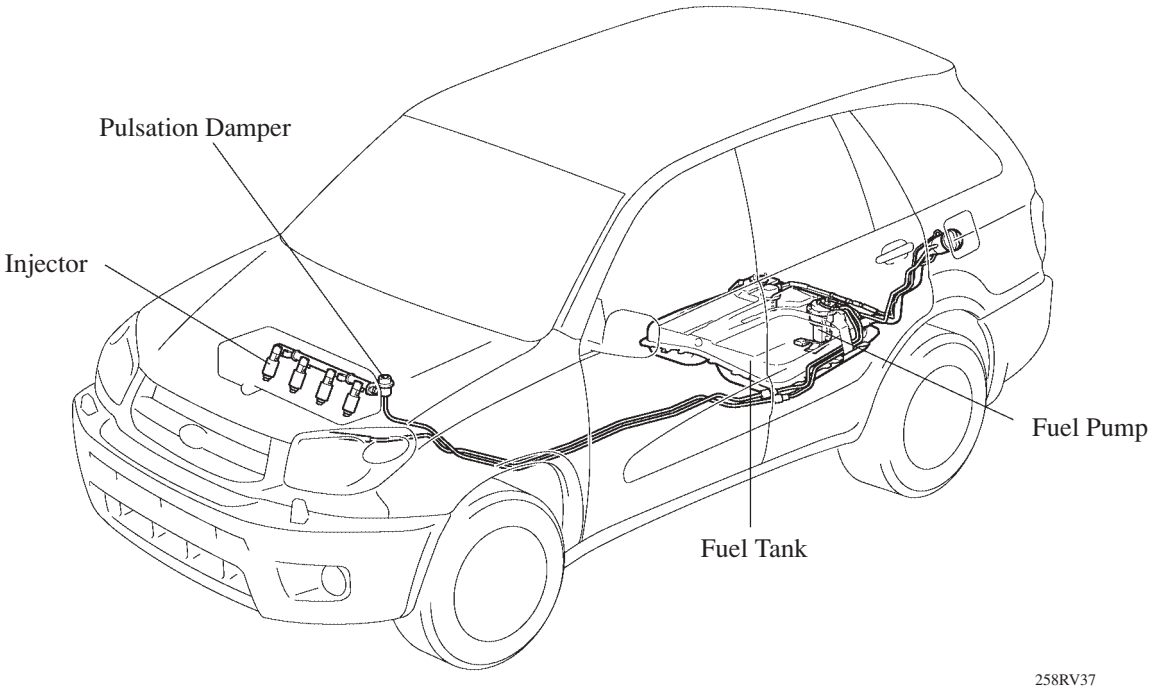

258RV37

Fuel Returnless System

- This system has been adopted to reduce the evaporative emission. As shown below, integrating the fuel filter, pressure regulator, and fuel sender gauge with fuel pump assembly makes it possible to discontinue the return of fuel from the engine area and prevent temperature rise inside the fuel tank.

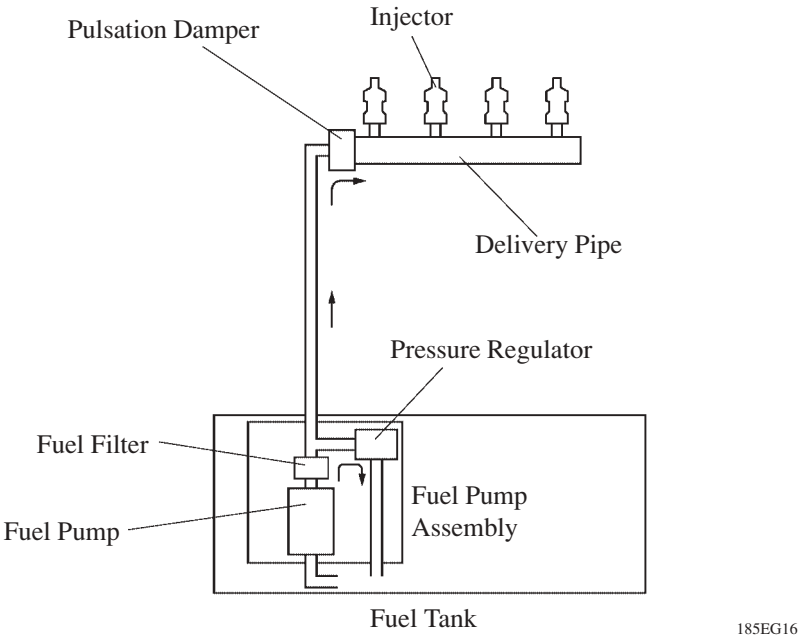

Fuel Pipe

As with the 1AZ-FE engine, quick connectors have been adopted. For details, see page 423.

Fuel Injector

The same fuel injectors as in the 1AZ-FE engine have been adopted. For details, see page 422.

Fuel Pump

A compact fuel in which a fuel filter, pressure regulator, and fuel sender gauge are integrated in the fuel pump assembly has been adopted.

▶ Specifications of Pressure Regulation ◀

Adjusting Pressure	kPa (kgf/cm^2)	324 ± 3.0 (3.3 ± 0.03)

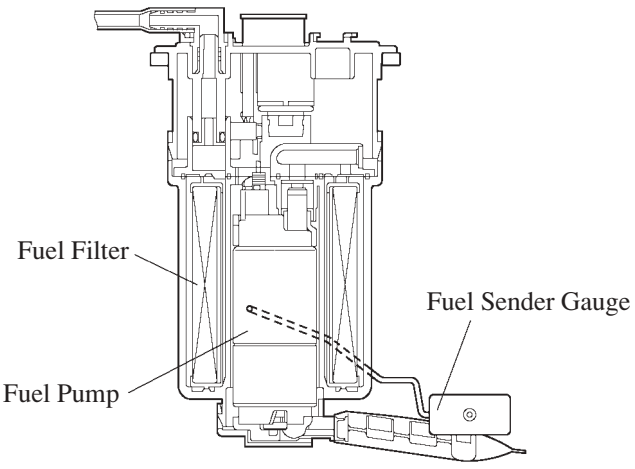

10. Ignition System

General

- A DIS (Direct Ignition System) has been adopted. The DIS improves the ignition timing accuracy, reduces high-voltage loss, and enhances the overall reliability of the ignition system by eliminating the distributor.
  The DIS in this engine is an independent ignition system which has one ignition coil (with igniter) for each cylinder.
- Iridium-tipped spark plugs have been adopted.

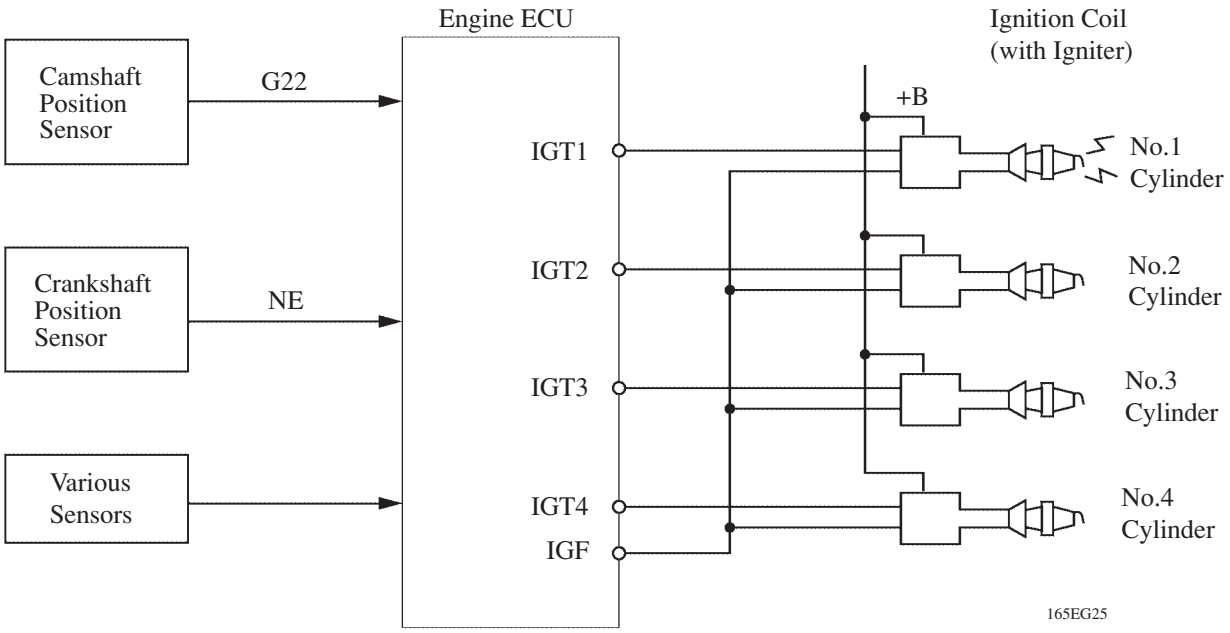

Ignition Coil

The DIS provides 4 ignition coils, one for each cylinder. The spark plug caps, which provide contact to the spark plugs, are integrated with an ignition coil. Also, an igniter is enclosed to simply the system.

10

Spark Plug

Iridium-tipped spark plugs have been adopted to realize a 192,000 km (120,000 mile) maintenance-free operation. By making the center electrode of iridium, the same ignition performance as of the platinum-tipped spark plug and further improvement of durability have been realized.

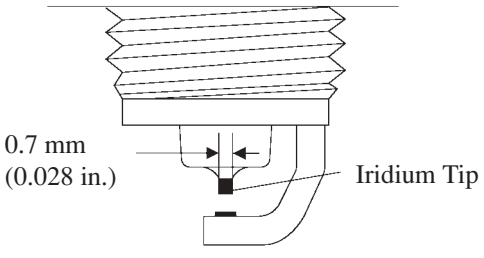

▶ Specifications ◀

DENSO	SK20R11
NGK	IFR6A11
Plug Gap	1.0 – 1.1 mm (0.0394 – 0.043 in.)

11. Charging System

- Instead of the conventional type alternator, a compact and lightweight segment conductor type alternator has been adopted for automatic transaxle model. This type of alternator generates high amperage output in a highly efficient manner.
- This alternator has a joined segment conductor system, in which multiple segment conductors are welded together to form the stator. Compared to the conventional winding system, the electrical resistance is reduced due to the shape of the segment conductors, and their arrangement helps to make the alternator more compact.

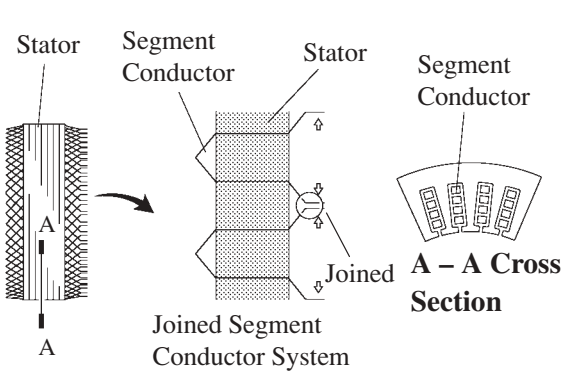

Segment Conductor Type Alternator

206EG40

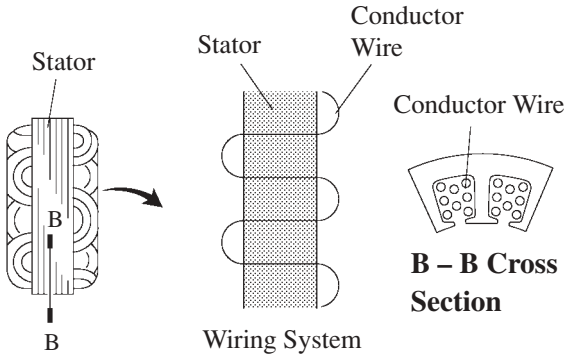

Conventional Type Alternator

206EG41

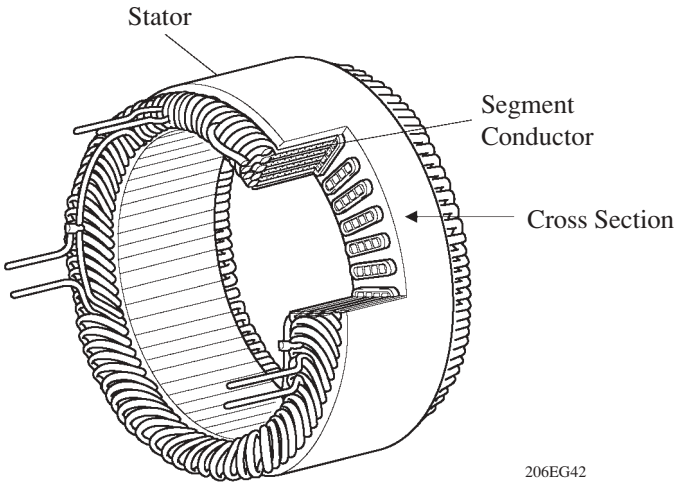

206EG42

Stator of Segment Conductor type Alternator

▶ Specifications ◀

Type	Segment Conductor (SE0)
Rated Voltage	12 V
Output Rated	100 A
Initial Output Starting Speed	1500 rpm Max.

▶ Wiring Diagram ◀

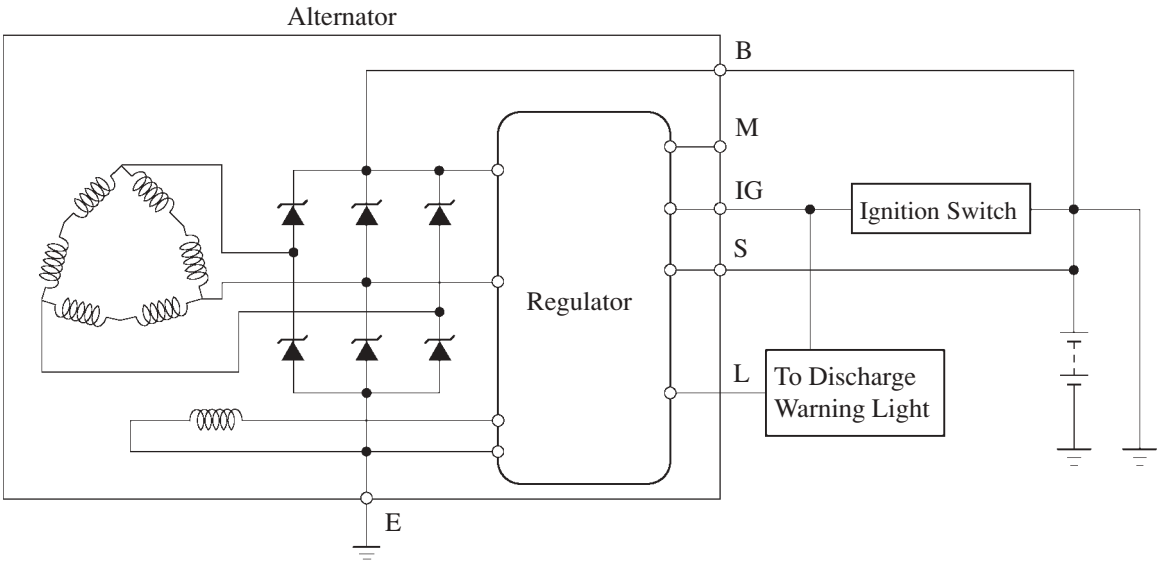

251EG03

12. Serpentine Belt Drive System

General

- Accessory components are driven by a serpentine belt consisting of a single V-ribbed belt. It reduces the overall engine length, weight and number of engine parts.
- An automatic tensioner eliminates the need for tension adjustment.

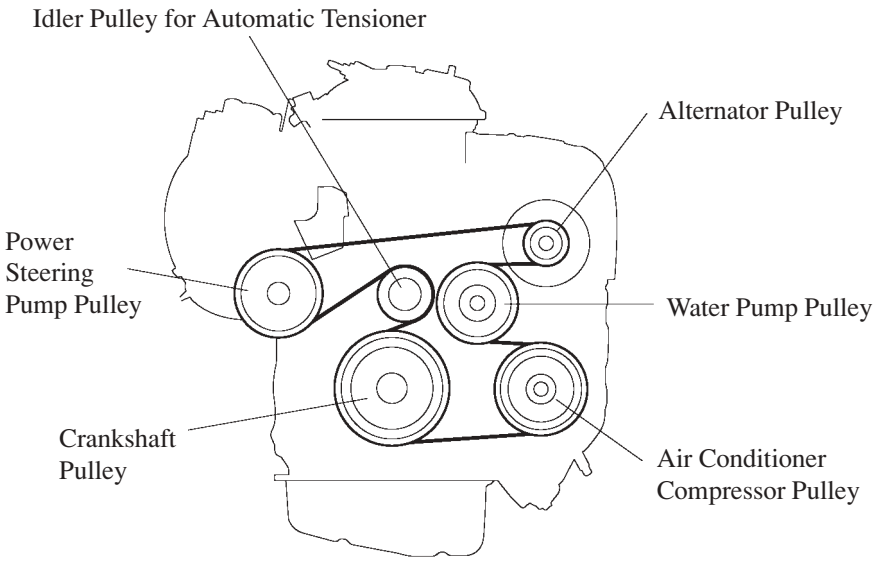

Automatic Tensioner

- The automatic tensioner consists of an idler pulley, and a tensioner. The idler pulley maintains belt tension by the force of the spring that is located in the tensioner.
- Due to the different suppliers used, the tensioner comes in two types, although their basic operation remain the same and they are interchangeable.

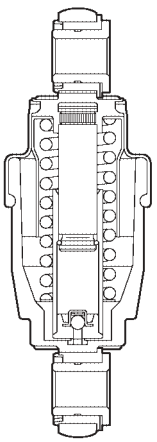

A – A Cross Section

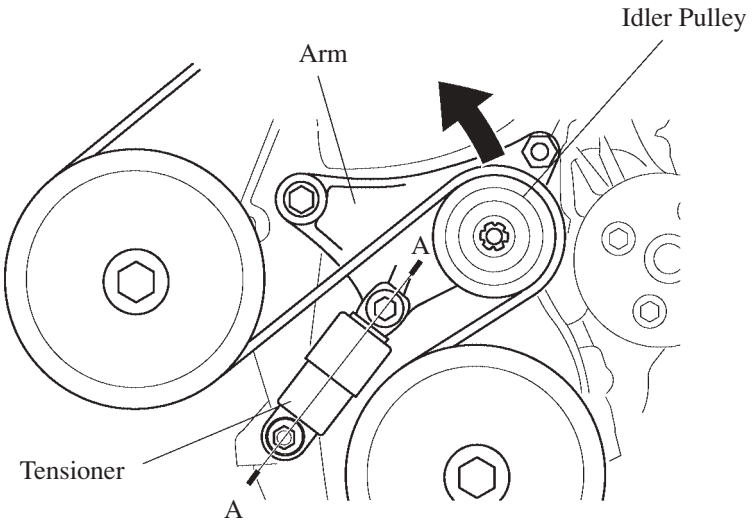

13. Engine Control System

General

The engine control system of the 2AZ-FE engine has following system.

System	Outline
EFI (Electronic Fuel Injection)	An L-type EFI system directly detects the intake air mass with a hot wire type air flow meter.
ESA (Electronic Spark Advance)	Ignition timing is determined by the engine ECU based on signals from various sensors. The engine ECU corrects ignition timing in response to engine knocking.
ETCS-i (Electronic Throttle Control System-intelligent) (See page 478)	● Optimally controls the throttle valve opening in accordance with the amount of accelerator pedal effort and the condition of the engine and the vehicle. ● A link-less type is used, without an accelerator cable. ● A linear type accelerator pedal position sensor is provided on the accelerator pedal. ● A no-contact type throttle position sensor is used. ● Controls the fast idle and idle speed.
VVT-i (Variable Valve Timing-intelligent) (See page 479)	Controls the intake camshaft to an optimal valve timing in accordance with the engine condition.
Air Fuel Ratio Sensor and Oxygen Sensor Heater Control	Maintains the temperature of the air fuel ratio sensor or oxygen sensor at an appropriate level to increase accuracy of detection of the oxygen concentration in the exhaust gas.
Air Conditioner Cut-off Control*1	By turning the air conditioner compressor ON or OFF in accordance with the engine condition, drivability is maintained.
Cooling Fan Control (See page 480)	Radiator cooling fan operation is controlled by water temperature sensor signal (THW) and the condition of the air conditioner operation.
Fuel Pump Control	Fuel pump operation is controlled by signal from the engine ECU.
	A fuel cut control is adopted to stop the fuel pump when any airbag is deployed during front or side collision.
Evaporative Emission Control	The engine ECU controls the purge flow of evaporative emission (HC) in the charcoal canister in accordance with engine conditions.
Engine Immobilizer*2	Prohibits fuel delivery and ignition if an attempt is made to start the engine with an invalid ignition key.
	The ID code stored in the transponder key ECU is compared with that of the transponder tip in the ignition key.
Diagnosis (See page 480)	When the engine ECU detects a malfunction, the engine ECU diagnoses and memorizes the failed section.
	All the DTCs (Diagnostic Trouble Codes) have been made to correspond to the SAE controlled codes.
Fail-Safe (See page 481)	When the engine ECU detects a malfunction, the engine ECU stops or controls the engine according to the data already stored in the memory.

*1: With Air Conditioner Model
*2: With Engine Immobilizer Model

Construction

The configuration of the engine control system in the 2AZ-FE engine in the new RAV4 is as shown in the following chart.

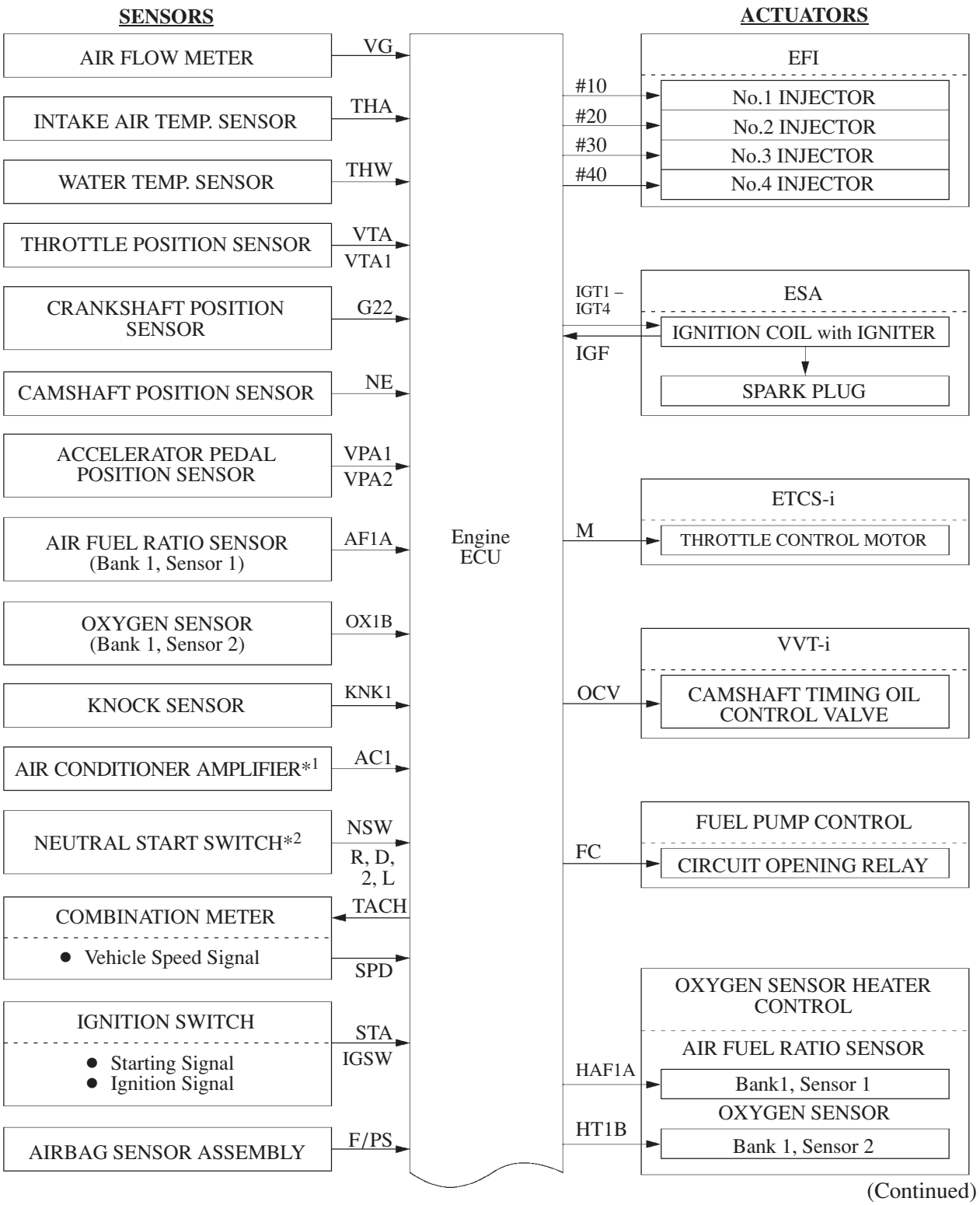

(Continued)

*1: With Air Conditioner

*2: Only for Automatic Transaxle

258RV38

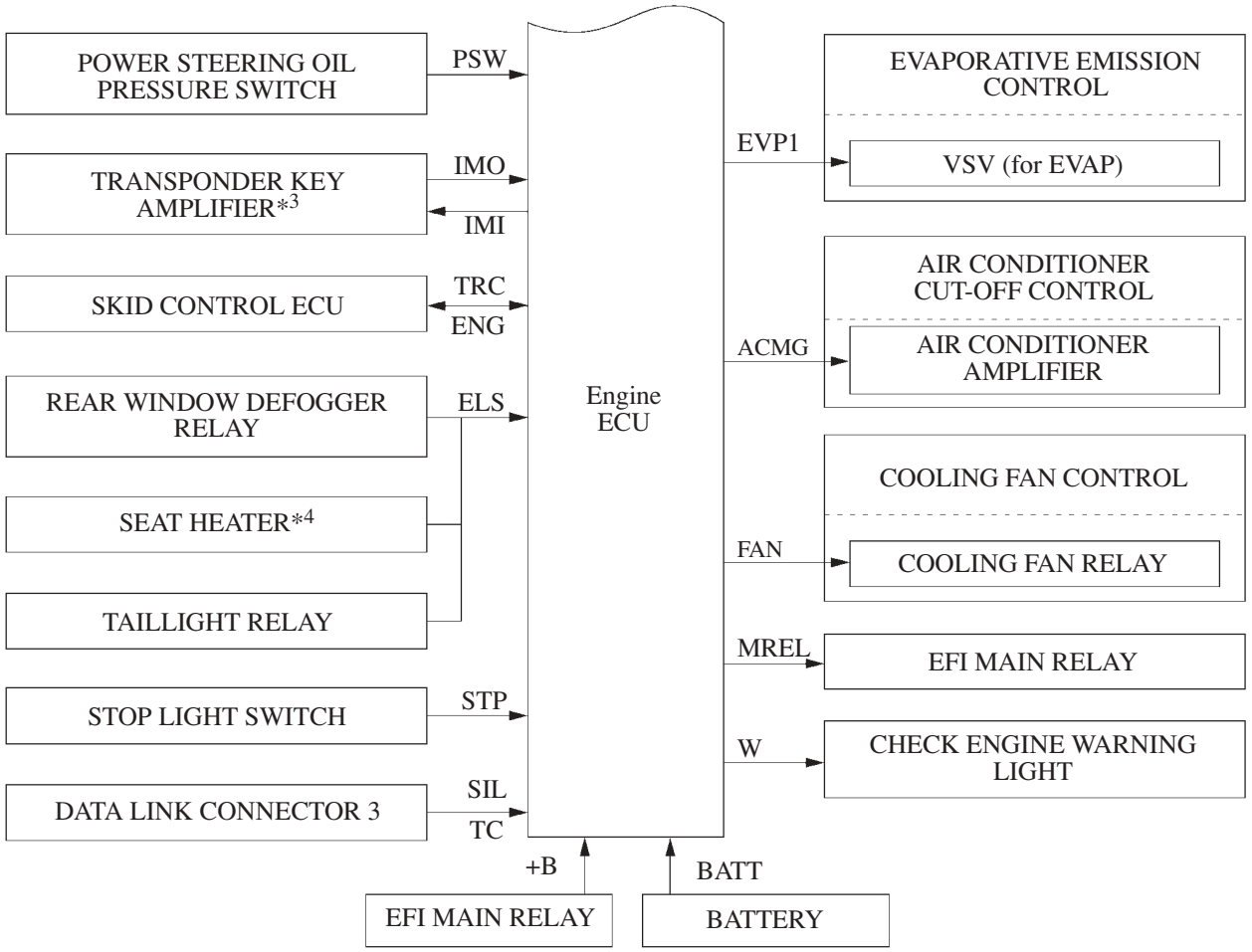

258RV39

*3: With Engine Immobilizer
*4: With Seat Heater

10

Engine Control System Diagram

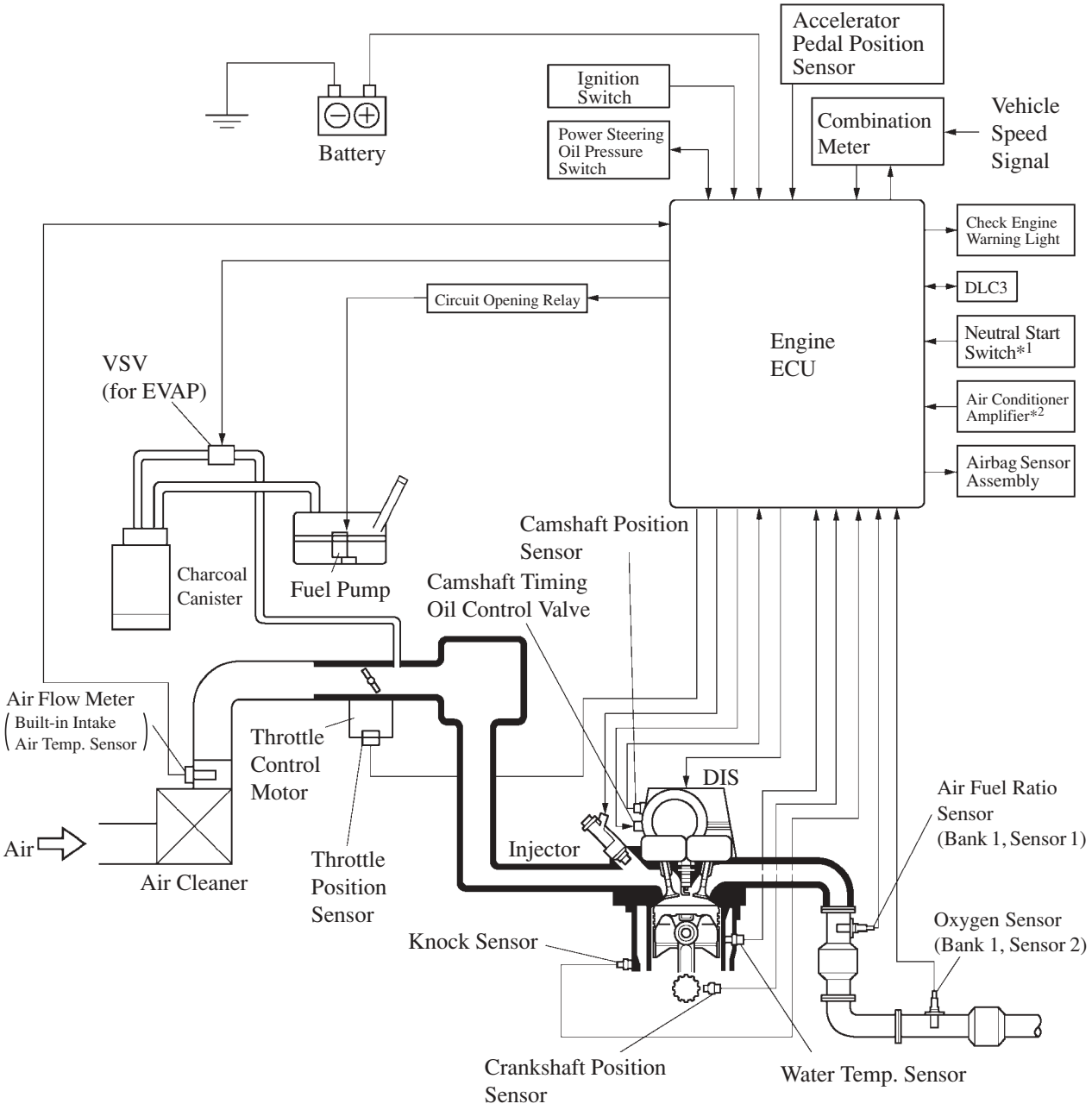

*1: Only for Automatic Transaxle
*2: With Air Conditioner

258RV40

Layout of Main Components

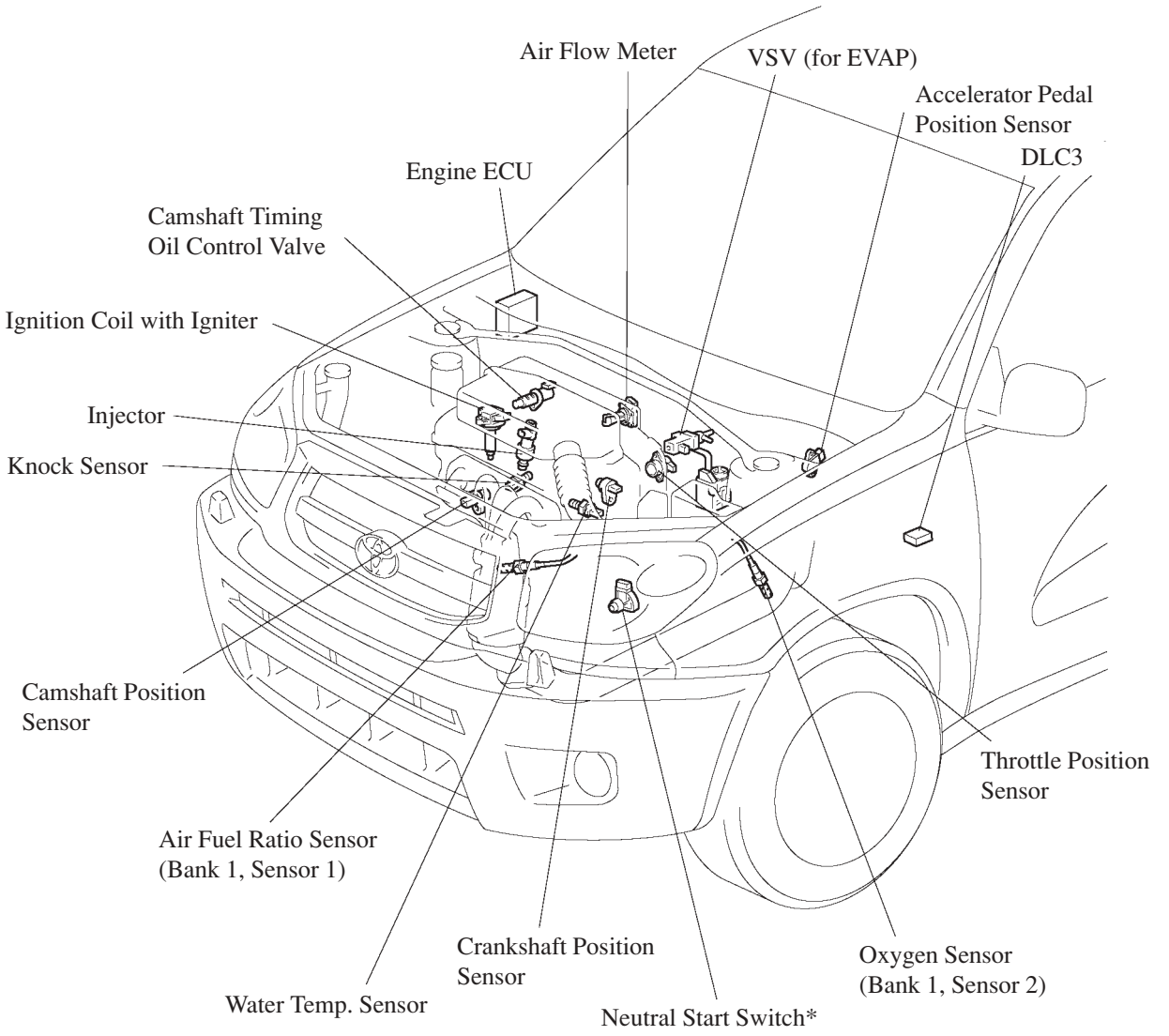

*: Only for Automatic Transaxle

258RV41

Main Components of Engine Control System

1) General

The following table shows the main components.

Components	Outline	Quantity
Engine ECU	32-bit CPU	1
Air Fuel Ratio Sensor (Bank 1, Sensor 1)	with Heater Type (Planar Type)	1
Oxygen Sensor (Bank 1, Sensor 2)	with Heater Type (Cup type)	1
Air Flow Meter	Hot-wire Type	1
Crankshaft Position Sensor (Rotor Teeth)	Pick-up Coil Type (36-2)	1
Camshaft position Sensor (Rotor Teeth)	Pick-up Coil Type (3)	1
Knock Sensor	Built-in Piezoelectric Element Type (Flat Type)	1
Accelerator Pedal Position Sensor	Linear Type	1
Throttle Position Sensor	No-contact Type	1

2) Air fuel ratio sensor (Planar type)

The same air fuel ratio sensor as in the 1AZ-FE engine has been adopted. For details, see page 432.

3) Knock Sensor (Flat type)

The same knock sensor as in the 1AZ-FE engine has been adopted. For details, see page 433.

4) Accelerator pedal position sensor (Linear type)

The same accelerator pedal position sensor as in the 1AZ-FE engine has been adopted. For details, see page 436.

5) Throttle position sensor (no-contact type)

The same throttle position sensor as in the 1AZ-FE engine has been adopted. For details, see page 437.

ETCS-i (Electronic Throttle Control System-intelligent)

The ETCS-i of the 2AZ-FE engine effects the same control as in the 1AZ-FE engine. For details, see page 438.

VVT-i (Variable Valve Timing-intelligent) System

The VVT-i system designed to control the intake camshaft within a wide range of 50° (of crankshaft angle) to provide a valve timing that is optimally suited to the engine condition, thus realizing improved torque in all the speed ranges and fuel economy, and reduce exhaust emission. The actual intake valve timing is feedback by means of the camshaft position sensor for constant control to the target valve timing.

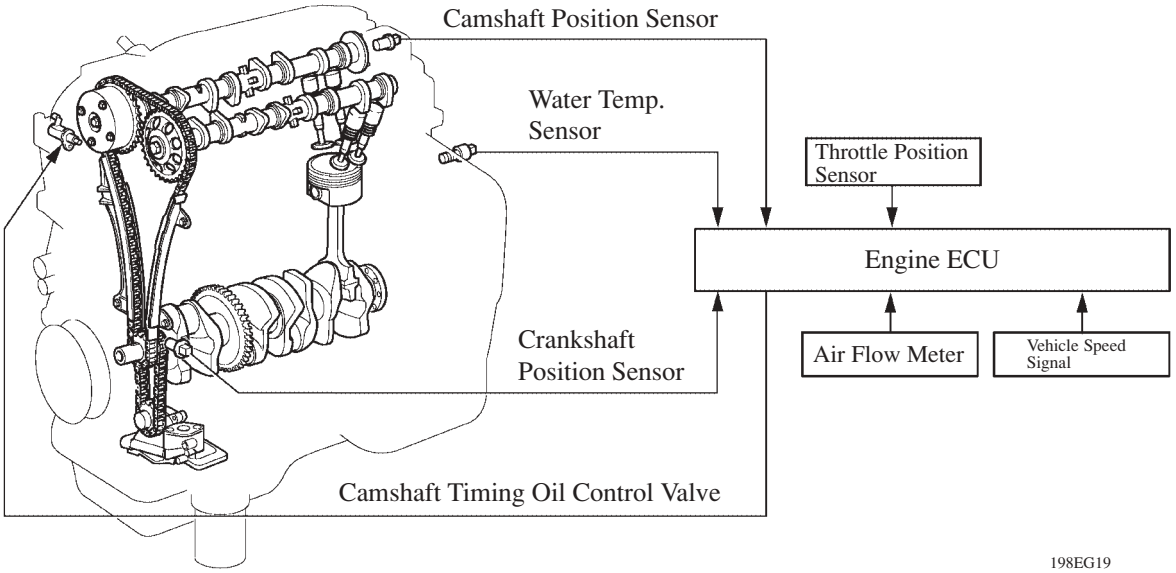

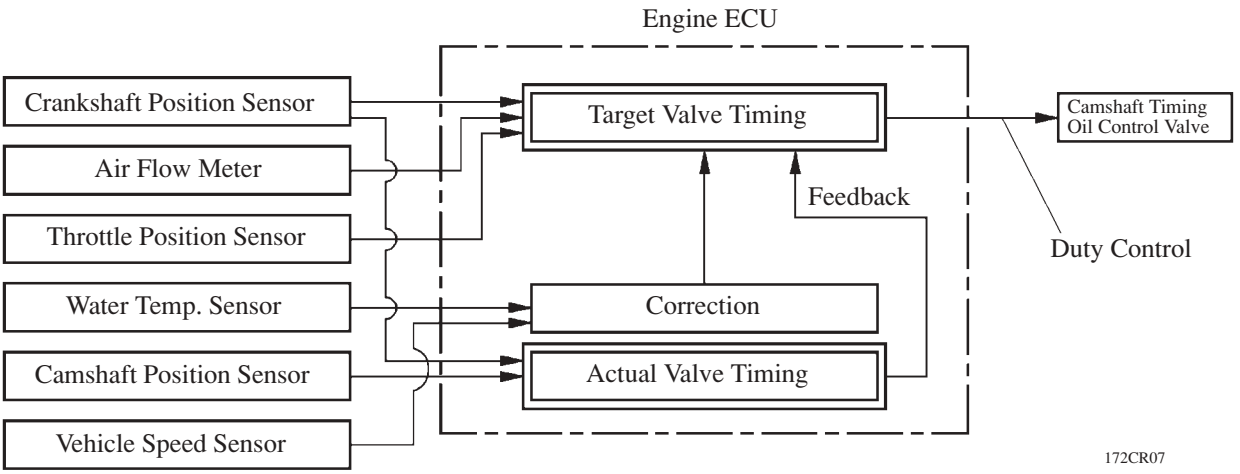

Cooling Fan Control

The cooling fan control is the same as the control on the 1AZ-FE engine. For details, see page 443.

Purge VSV

The purge flow rate has been set to 60 liters per minute.

Diagnosis

When the engine ECU detects malfunction, the engine ECU makes a diagnosis and memorizes the failed section. Furthermore, check engine warning light in the combination meter illuminates or blinks to inform the driver. The engine ECU will also store the DTC (Diagnostic Trouble Code) of the malfunctions. The DTC can be read by connecting a hand-held tester (5-digit code). For detail, see page the 2AZ-FE Repair Manual Supplement (Pub No. RM1079E).
As a result of the adoption of the SAE controlled codes, the DTCs have been changed as described below.

▶ Diagnostic Trouble Code ◀

DTC No.	Detection Item	DTC No.	Detection Item
P0010	Camshaft Position “A” Actuator Circuit (Bank 1)	P0123	Throttle/Pedal Position Sensor/Switch “A” Circuit High Input
P0011	Camshaft position “A” – Timing Over-Advanced or System performance (Bank 1)	P0220	Throttle/Pedal Position Sensor/Switch “B” Circuit
P0012	Camshaft Position “A” – Timing Over-Retarded (Bank 1)	P0222	Throttle/Pedal Position Sensor/Switch “B” Circuit Low Input
P0016	Camshaft Position – Camshaft Position Correlation (Bank 1 Sensor A)	P0223	Throttle/Pedal Position Sensor/Switch “B” Circuit High Input
P0031	Oxygen Sensor Heater Control Circuit Low (Bank 1 Sensor 1)*	P0327	Knock Sensor 1 Circuit Low Input (Bank 1 or Single Sensor)
P0032	Oxygen Sensor Heater Control Circuit High (Bank 1 Sensor 1)*	P0328	Knock Sensor 1 Circuit High Input (Bank 1 or Single Sensor)
P0102	Mass or Volume Air Flow Circuit Low Input	P0339	Crankshaft Position Sensor “A” Circuit Intermittent
P0103	Mass or Volume Air Flow Circuit High Input	P0341	Camshaft Position Sensor “A” Circuit Range/performance (Bank 1 or Single Sensor)
P0112	Intake Air Temperature Circuit Low Input	P0351	Ignition Coil “A” Primary/Secondary Circuit
P0113	Intake Air Temperature Circuit High Input	P0352	Ignition Coil “B” Primary/Secondary Circuit
P0117	Water Temperature Circuit low Input	P0353	Ignition Coil “C” Primary/Secondary Circuit
P0118	Water Temperature Circuit High Input	P0354	Ignition Coil “D” Primary/Secondary Circuit
P0122	Throttle/Pedal Position Sensor/Switch “A” Circuit Low Input	P0504	Brake Switch “A”/“B” correlation

(Continued)

*: Although the title (DTC description) says “oxygen sensor”, this DTC is related to the “air fuel ratio sensor”.

DTC No.	Detection Item	DTC No.	Detection Item
P0604	Internal Control Module Random Access Memory (RAM) Error	P2123	Throttle/Pedal Position Sensor/Switch "D" Circuit High Input
P0606	ECU/PCM Processor	P2125	Throttle/Pedal Position Sensor/Switch "E" Circuit
P0607	Control Module Performance	P2127	Throttle/Pedal Position Sensor/Switch "E" Circuit Low Input
P0657	Actuator Supply Voltage Circuit/Open	P2128	Throttle/Pedal Position Sensor/Switch "E" Circuit High Input
P2102	Throttle Actuator Control Motor Circuit Low	P2135	Throttle Pedal Position Sensor/Switch "A"/"B" Voltage Correlation
P2103	Throttle Actuator Control Motor Circuit High	P2138	Throttle Pedal Position Sensor/Switch "D"/"E" Voltage Correlation
P2111	Throttle Actuator Control System – Stuck Open	P2237	Oxygen Sensor Pumping current Circuit/Open (for A/F sensor) (Bank 1 Sensor 1)
P2112	Throttle Actuator Control System – Stuck Closed	P2238	Oxygen Sensor Pumping current Circuit/Low (for A/F sensor) (Bank 1 Sensor 1)
P2118	Throttle Actuator Control Motor Current Range/Performance	P2239	Oxygen Sensor Pumping current Circuit/ High (for A/F sensor) (Bank 1 Sensor 1)
P2119	Throttle Actuator Control Throttle Body Range/Performance	P2251	Oxygen Sensor Reference Ground Circuit/ Open (for A/F sensor) (Bank 1 Sensor 1)
P2120	Throttle/Pedal Position Sensor/Switch "D" Circuit	P2252	Oxygen Sensor Reference Ground Circuit Low (for A/F sensor) (Bank 1 Sensor 1)
P2121	Throttle/Pedal Position Sensor/Switch "D" Circuit Range/Performance	P2253	Oxygen Sensor Reference Ground Circuit High (for A/F sensor) (Bank 1 Sensor 1)
P2122	Throttle/Pedal Position Sensor/Switch "D" Circuit Low Input	B2799	Engine Immobilizer System Malfunction

*: Although the title(DTC description) says "oxygen sensor", this DTC is related to the "air fuel ratio sensor".

Fail-Safe

When the engine ECU detects a malfunction, the engine ECU stops or controls the engine according to the data already stored in memory. The fail-safe control list and the actual fail-safe control are the same as on the 1AZ-FE engine. For details, see page 446.

■ 1CD-FTV ENGINE

1. Cooling System

The TOYOTA genuine Super Long Life Coolant (SLLC) has been adopted. As result, the maintenance interval has been extended. For detailed specifications, refer to page 417.

▶ Specifications ◀

Model		New		Previous
Engine Coolant	Capacity liters (US qts, Imp.qts)	M/T	7.6 (8.0, 6.6)	←

2. Fuel System

- The rubber tube joints of the fuel tubes on the models for Europe have been changed to quick-connector joints. For details, see page 423.

■E350 SERIES MANUAL TRANSAXLE

The gear ratio of the transaxle has been set as follows:

Model Code		ACA2**-A*MNK*	CLA2**-A*MNYW	ACA2**-A*MNK*
Engine		1AZ-FE	1CD-FTV	2AZ-FE
Transaxle		E352F (4WD)	E353F (4WD)	E359F (4WD)
Gear Ratio	1st	3.833	←	←
	2nd	2.045	←	1.913
	3rd	1.333	←	1.258
	4th	1.028	0.972	0.972
	5th	0.820	0.731	0.775
	Reverse	3.583	←	←
Final Gear Ratio		4.562	4.235	4.562
Oil Type		SAE 75W-90, API GL-3	←	←
Oil Capacity liter (US qts., Imp. qts.)		3.4 (3.2, 3.9)	←	←

■AUTOMATIC TRANSAXLE

An ATF (Automatic Transaxle Fluid) warmer has been newly adopted.

- While the engine is being warmed up, the ATF warmer effects a heat exchange between the engine coolant and ATF before the thermostat of the engine opens. This promotes the rise in the ATF temperature, which shortens the startup time of the flex-lockup control of the automatic transaxle and improves fuel economy.
- While the engine is operating under a low to medium load after it has been warmed up, the ATF warmer uses the engine coolant to cool the ATF, before the coolant is cooled in the radiator. This reduces friction in the automatic transaxle and improves fuel economy.
- While the engine is operating under a high load after it has been warmed up, if the ATF temperature becomes higher than the engine coolant temperature, the ATF warmer functions as a cooler to cool the ATF. Because the temperature of the engine coolant that cools the ATF is high, a radiator with a large heat dissipation capability has been provided in order to ensure the proper amount of cooling performance.

10

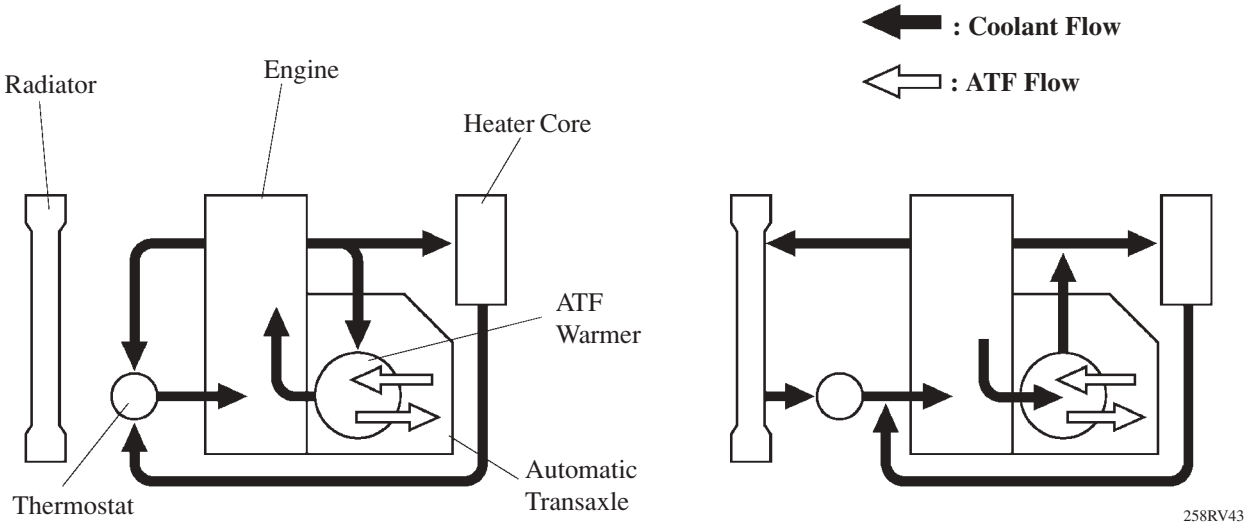

Coolant Flow with Thermostat Closed **Coolant Flow with Thermostat Open**

■ FRONT SHOCK ABSORBER

The linear control valve and the base valve of the front shock absorber have been changed to different-diameter laminated valves.

- This shock absorber generates the damping force in the low piston speed range in order to realize a flat ride comfort.
- The responsiveness of the damping force has been increased to help ensure the vehicle's road tracking performance.

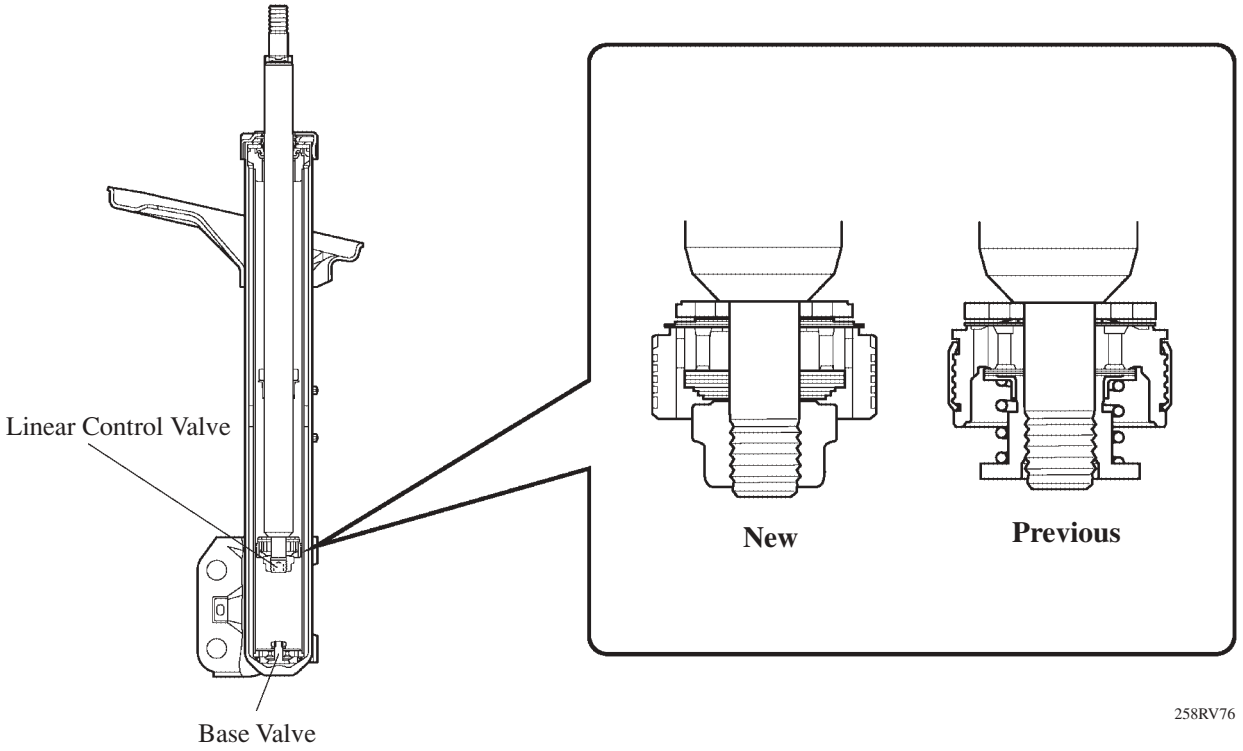

■BRAKE CONTROL SYSTEM (ABS with EBD, BRAKE ASSIST, TRC and VSC)

1. General

A VSC (Vehicle Stability Control) system has been made available as optional equipment on the models for Europe and Australia.

The brake control system of the models equipped with VSC has the following functions:

Function	Outline
ABS (Anti-lock Brake System)	The ABS helps prevent the wheels from locking when the brakes are applied firmly or when braking on a slippery surface.
EBD (Electronic Brake force Distribution)	The EBD control utilizes ABS, realizing the proper brake force distribution between front and rear wheels in accordance with the driving conditions. In addition, during cornering braking, it also controls the brake forces of right and left wheels, helping to maintain the vehicle behavior.
Brake Assist	Brake assist applies the sufficient pressure on the brake pedal if the brake pedal operation is not sufficient when urgent braking is needed.
TRC (Traction Control)	The TRC system helps prevent the drive wheels from slipping if the driver presses the accelerator pedal excessively when starting off or accelerating on a slippery surface.
VSC (Vehicle Stability Control)	The VSC system helps prevent the vehicle from slipping sideways as a result of strong front wheel skid or strong rear wheel skid during cornering.

- This model uses the CAN (Controller Area Network) communication system for communication between the skid control ECU, steering angle sensor and yaw rate & deceleration sensor.
- The “skid control ECU and brake actuator”, and the “yaw rate sensor and deceleration sensor”, are integrated units, respectively.
- A trochoid gear type pump has been adopted for the pump in the brake actuator.
- A pressure regulator valve has been adopted to regulate the pressure of the fluid that is supplied to the pump.

Service Tip

When brake control system (ABS with EBD) is activated, the brake pedal could shudder, which is a normal occurrence of the system in operation and should not be considered a malfunction.

▶ System Diagram ◀

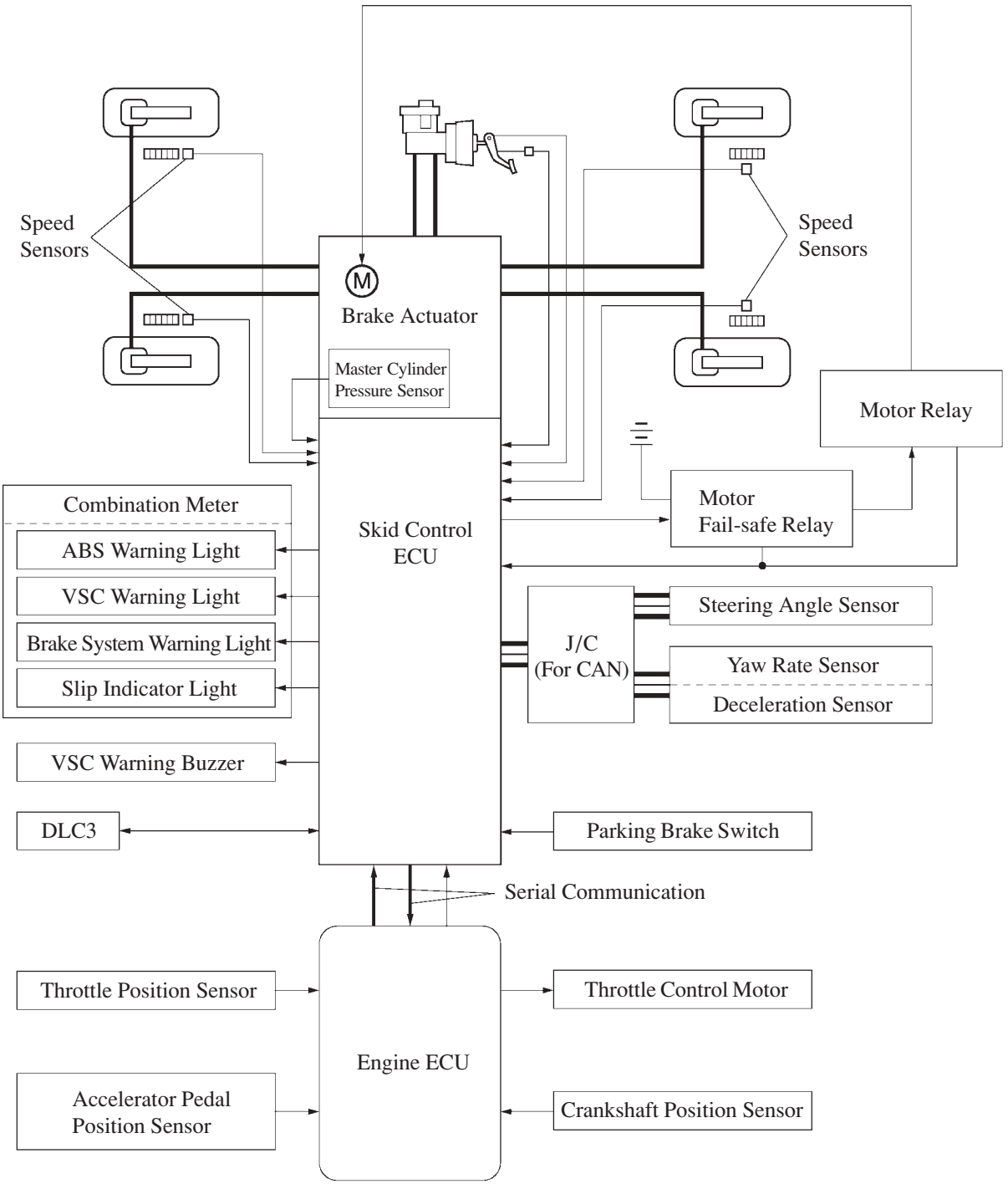

: CAN (Controller Area Network)

258RV72

2. Outline of EBD Control

General

The distribution of the brake force, which was performed mechanically in the past, is now performed under electrical control of the skid control ECU, which controls the braking force in accordance with the vehicle's driving conditions.

Front / Rear Wheels Brake Force Distribution

If the brakes are applied while the vehicle is moving straight forward, the transfer of the road reduces the load that is applied to the rear wheels. The skid control ECU determines this condition by way of the signals from the speed sensor, and the brake actuator regulates the distribution of the brake force of the rear wheels to optimally control.
For example, the amount of the brake force that is applied to the rear wheels during braking varies whether or not the vehicle is carrying a load. The amount of the brake force that is applied to the rear wheels also varies in accordance with the extent of the deceleration.
Thus, the distribution of the brake force to the rear is optimally controlled in order to effectively utilize the braking force of the rear wheels under these conditions.

▶ EBD Control Concept ◀

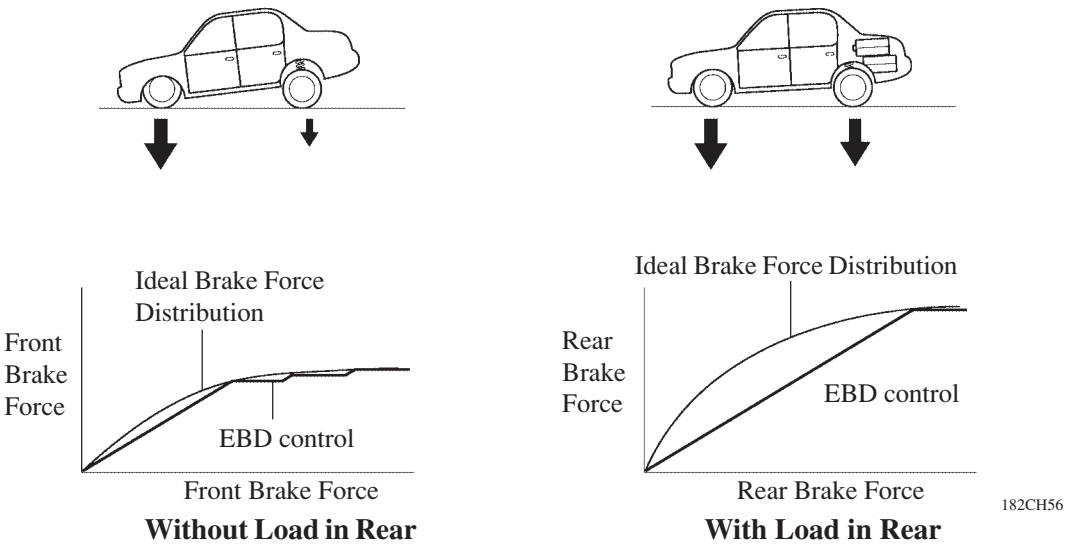

Right / Left Wheels Brake Force Distribution (During Cornering Braking)

When the brakes are applied while the vehicle is cornering, the load that applied to the inner wheel decreases to the outer wheel increases. The skid control ECU determines this condition by way of the signals from the speed sensor, and the brake actuator regulates the brake force in order to optimally control the distribution of the brake force to the inner wheel and outer wheel.

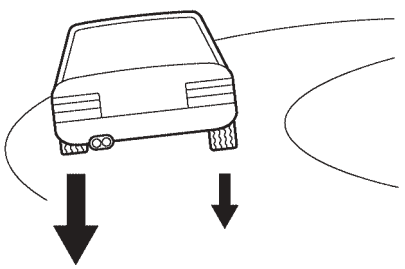

10

3. Outline of Brake Assist System

- The Brake Assist System interprets a quick push of the brake pedal as emergency braking and supplements the braking power applied if the driver has not stepped hard enough on the brake pedal. In emergencies, drivers, especially inexperienced ones, often panic and do not apply sufficient pressure on the brake pedal. Based on the signals from the master cylinder pressure sensor, the skid control ECU calculates the speed and the amount of the brake pedal application and then determines the intention of the driver to make an emergency braking. If the skid control ECU determines that the driver intends emergency braking, the system activates the brake actuator to increase the brake fluid pressure, which applies the sufficient pressure on the brake pedal.
  The Brake Assist System in combination with ABS helps improve the vehicle's brake performance.
  A key feature of Brake Assist system is that the timing and the degree of braking assistance are designed to ensure that the driver does not discern anything unusual about the braking operation. When the driver intentionally eases up on the brake pedal, the system reduces the amount of assistance it provides.

▶ In case that the driver's depressing force is small when applying emergency braking ◀

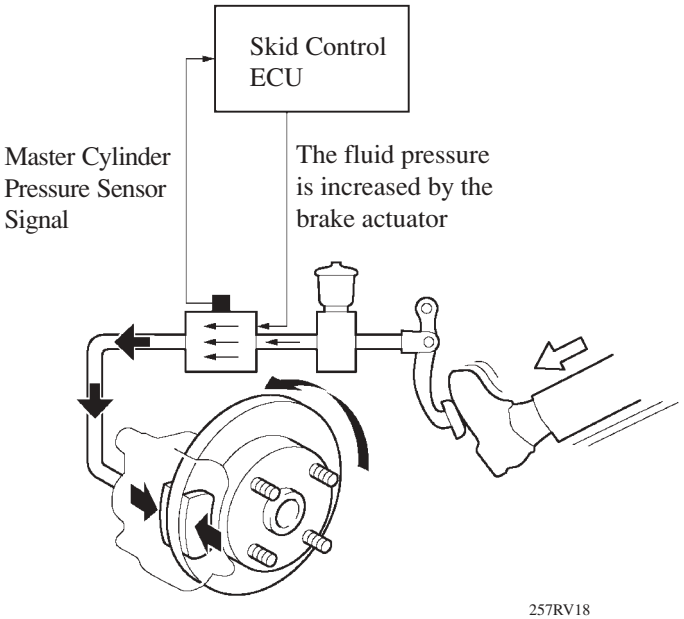

With Brake Assist System

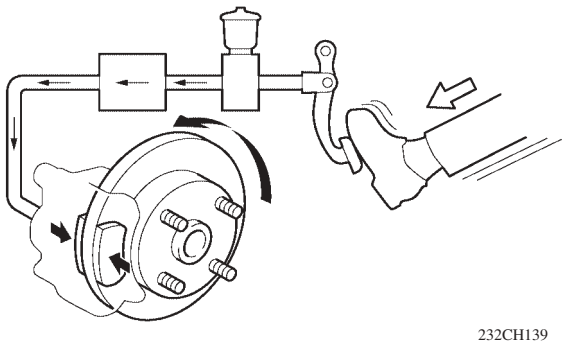

Without Brake Assist System*

*: This is no difference of the maximum brake performance between the vehicles with and without brake assist system.

4. Outline of TRC System

- If the driver presses the accelerator pedal aggressively when starting off or accelerating on a slippery surface, the drive wheel could slip due to the excessive amount of torque that is generated. By applying hydraulic brake control to the drive wheels and regulating the throttle to control the engine output, the TRC system helps minimize the slippage of the drive wheels, thus generating the drive force that is appropriate for the road surface conditions.
- For example, a comparison may be made between two vehicles, one with the TRC system and the other without. If the driver of each vehicle operates the accelerator pedal in a rough manner while driving over a surface with different surface friction characteristics, the drive wheel on the slippery surface could slip as illustrated. As a result, the vehicle can not start smoothly.
  However, when the vehicle is equipped with the TRC system, the skid control ECU instantly determines the state of the vehicle and operates the brake actuator in order to apply the brake of the slipping drive wheel. Furthermore, the engine ECU receives the signals from the skid control ECU and regulates the throttle in order to control the engine output. Thus, the system can help maintain a stable driving force.

▶ Driving condition on road with different surface friction characteristics ◀

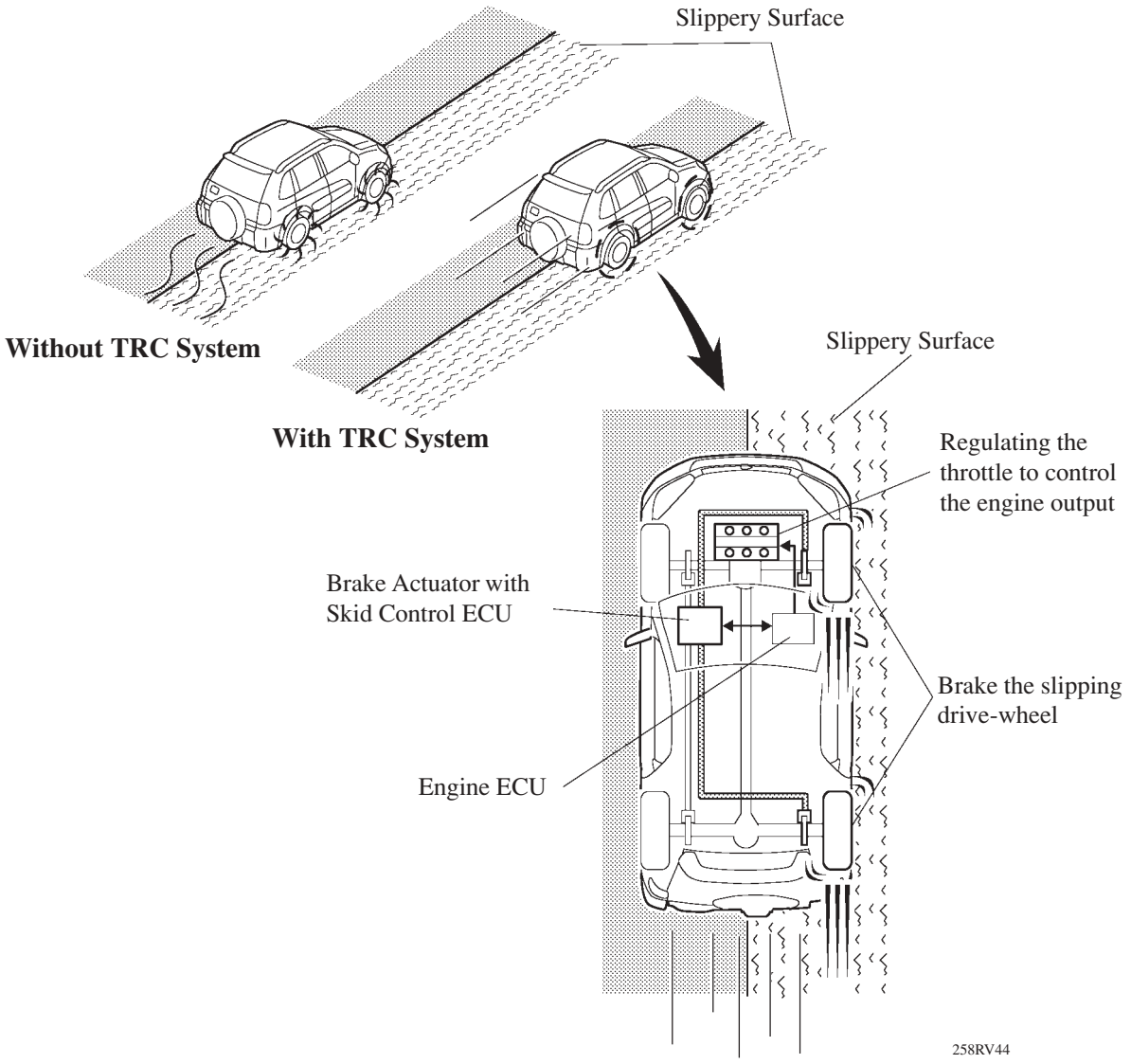

5. Outline of VSC System

General

The followings are two examples that can be considered as circumstances in which the tires exceed their lateral grip limit.
The VSC system is designed to help control the vehicle behavior by controlling the engine output and the brakes at each wheel when the vehicle is under one of the conditions indicated below.

- When the front wheels lose grip in relation to the rear wheels (front wheel skid tendency).
- When the rear wheels lose grip in relation to the front wheels (rear wheel skid tendency).

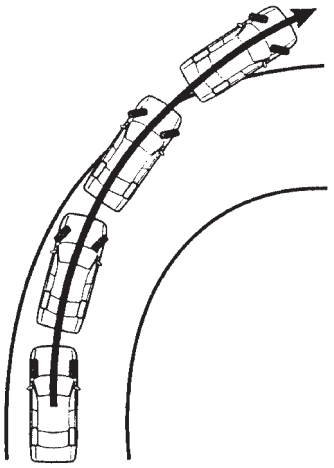

151CH17

Front Wheel Skid Tendency

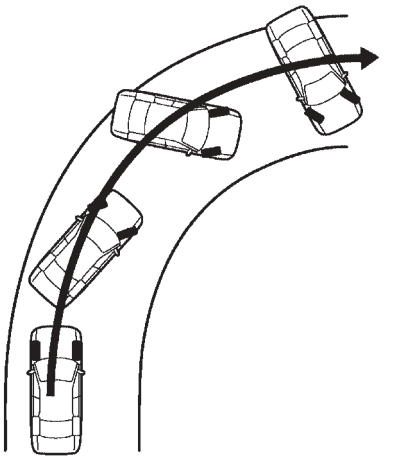

189CH100

Rear Wheel Skid Tendency

Method for Determining the Vehicle Condition

To determine the condition of the vehicle, sensors detect the steering angle, vehicle speed, vehicle's yaw rate, and the vehicle's lateral acceleration, which are then calculated by the skid control ECU.

1) Determining Front Wheel Skid

Whether or not the vehicle is in the state of front wheel skid is determined by the difference between the target yaw rate and the vehicle's actual yaw rate.
When the vehicle's actual yaw rate is smaller than the yaw rate (a target yaw rate that is determined by the vehicle speed and steering angle) that should be rightfully generated when the driver operates the steering wheel, it means the vehicle is making a turn at a greater angle than the locus of travel.
Thus, the skid control ECU determines that there is a large tendency to front wheel skid.

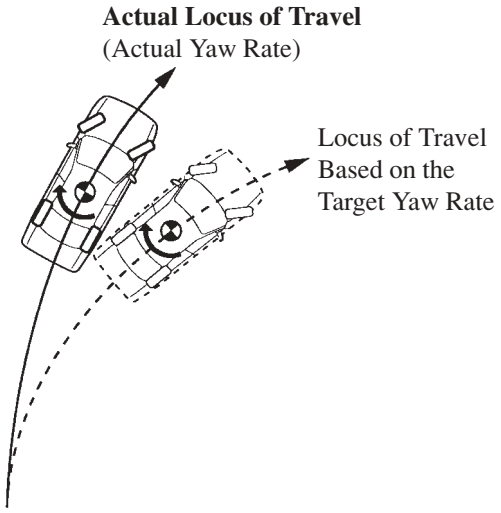

151CH19

2) Determining Rear Wheel Skid

Whether or not the vehicle is in the state of rear wheel skid is determined by the values of the vehicle's slip angle and the vehicle's slip angular velocity (time-dependent changes in the vehicle's slip angle). When the vehicle's slip angle is large, and the slip angular velocity is also large, the skid control ECU determines that the vehicle has a large rear wheel skid tendency.

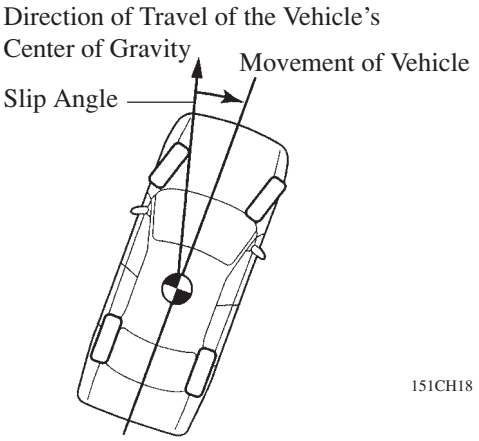

Method for VSC Operation

When the skid control ECU determines that the vehicle exhibits a tendency to front wheel skid or rear wheel skid, it decreases the engine output and applies the brake of a front or rear wheel to control the vehicle's yaw moment.
The basic operation of the VSC is described below. However, the control method differs depending on the vehicle's characteristics and driving conditions.

1) Dampening a Strong Front Wheel Skid

When the skid control ECU determines that there is a large front wheel skid tendency, it counteracts in accordance with the extent of that tendency. The skid control ECU controls the engine power output and applies the brakes of the front wheels and rear wheel of the inner circle of the turn in order to help restrain the front wheel skid tendency.

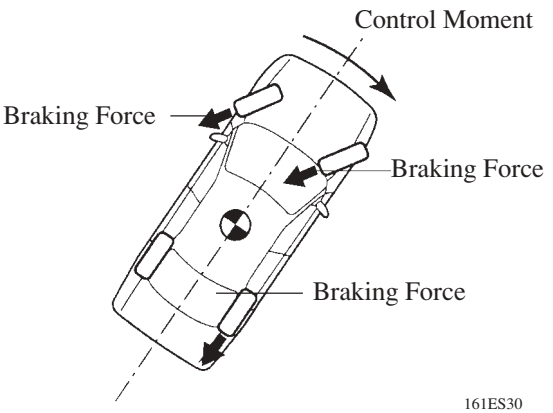

Making a Right Turn

2) Dampening a Strong Rear Wheel Skid

When the skid control ECU determines that there is a large rear wheel skid tendency, it counteracts in accordance with the extent of that tendency. It applies the brakes of the front wheel of the outer circle of the turn, and generates an outward moment of inertia in the vehicle, in order to help restrain the rear wheel skid tendency. Along with the reduction in the vehicle speed caused by the braking force, which helps dampen a strong rear wheel skid tendency.
In some cases, the skid control ECU applies the brake of the rear wheels, as necessary.

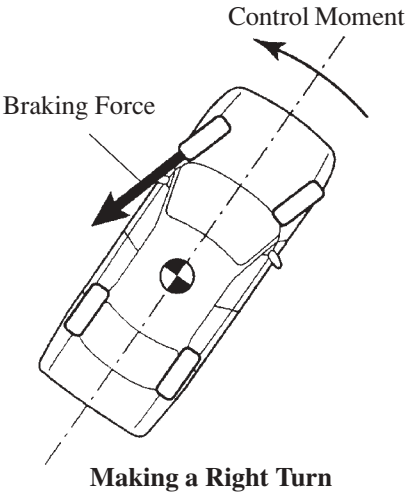

Making a Right Turn

Braking Control Under the Conditions in Which the Tires Do Not Exceed the Lateral Limitations of the Vehicle

1) During Cornering Braking

The VSC system determines the cornering conditions of the vehicle in accordance with the signals provided by the yaw rate & deceleration sensor, and the speed sensor. It determines the extent of the brake pedal application by the driver in accordance with the signals provided by the master cylinder pressure sensor.

When the vehicle is braking while cornering, the brake actuator increases the brake fluid pressure to the front outer wheel of the turn, and simultaneously controls the brake fluid pressure to the inner wheel of the turn. This generates a moment of inertia that inhibits the vehicle from veering further inward of the turn. As a result, this system provides the excellent vehicle stability and braking performance.

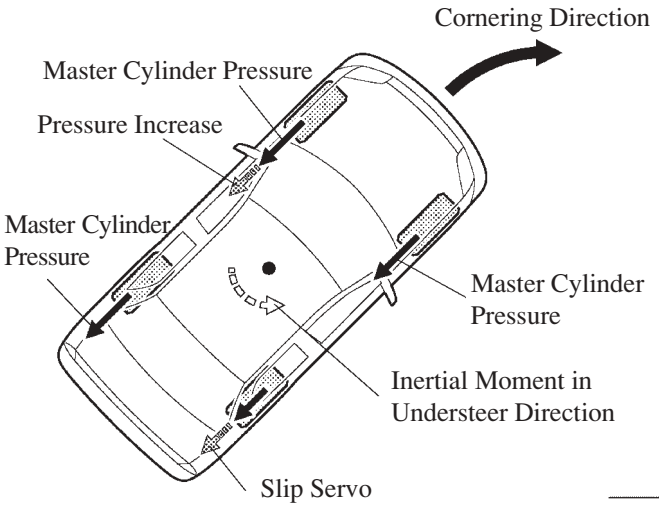

257RV36

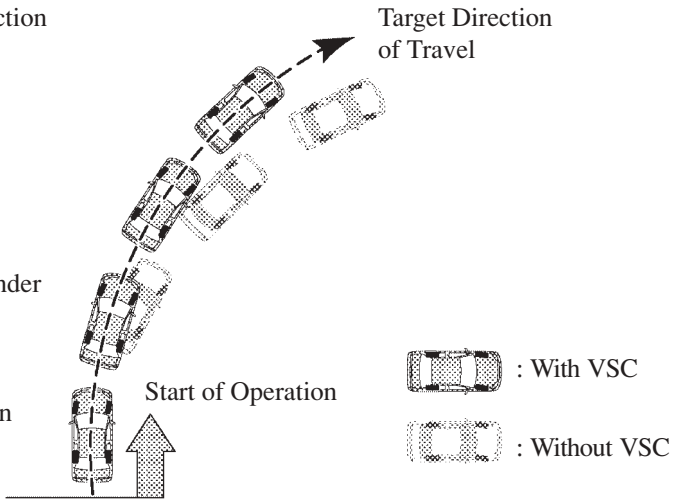

257RV37

2) During High-Speed Straightline Braking

The VSC system determines the extent of the brake pedal application by the driver in accordance with the signals provided by the master cylinder pressure sensor, and the high-speed driving conditions in accordance with the signals provided by the speed sensor.
When the fluid pressure in the master cylinder reaches a predetermined value while the vehicle is braking at a predetermined speed or higher, the system controls the brake fluid pressure applied to the rear wheels as a result of the driver's further application of the brake pedal. This helps suppress the slippage of the rear tires and provides the excellent stability of the vehicle.
To compensate for the reduction in the braking force due to the suppression of the fluid pressure to the rear brakes, the brake actuator increases the fluid pressure to the front wheel brakes, in order to provide the proper braking force required by the driver.

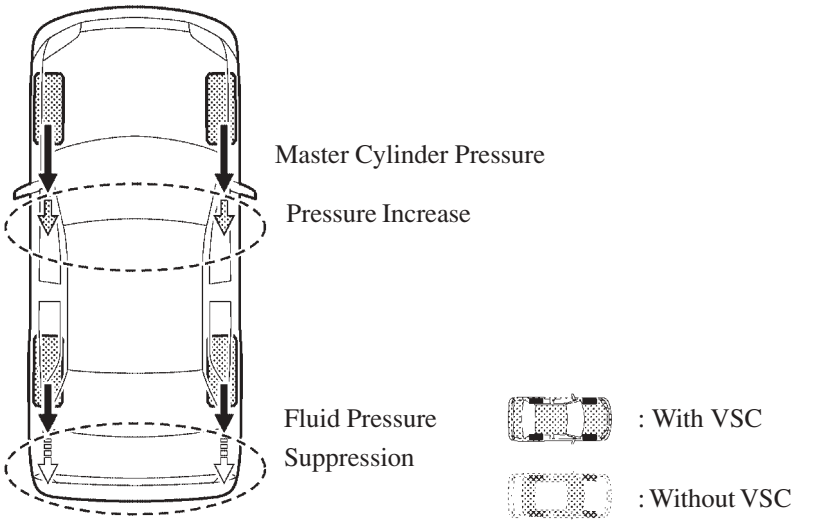

257RV38

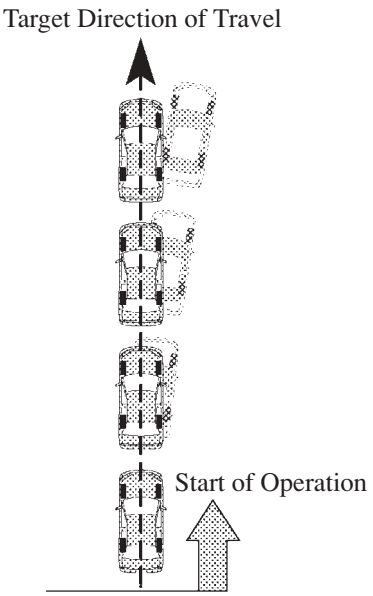

257RV39

6. Layout of Main Components

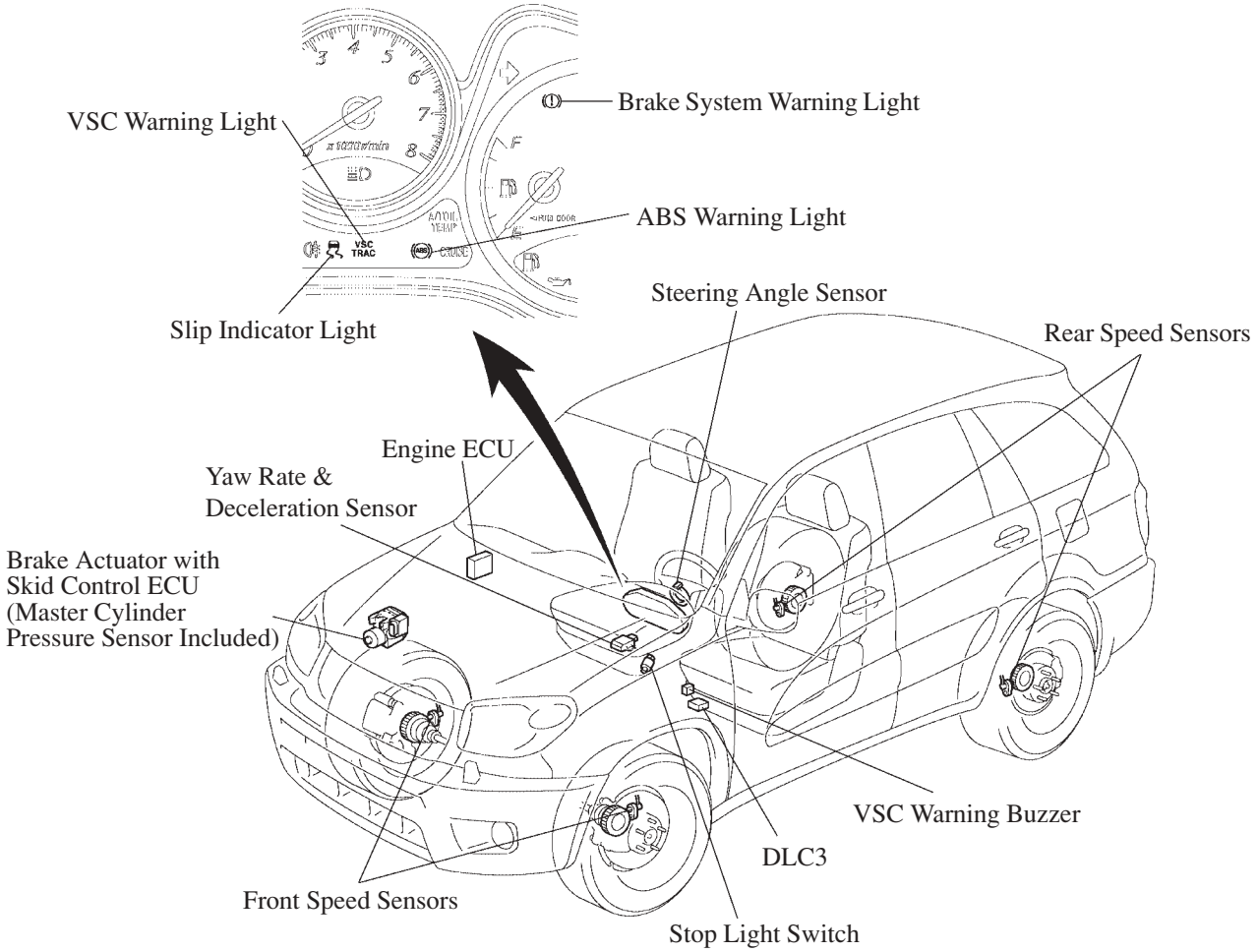

7. Function of Main Components

Components		Function
Brake Actuator		Changes the fluid path based on the signals from the skid control ECU during the operation of the ABS with EBD & Brake Assist & TRC & VSC system, in order to control the fluid pressure that is applied to the wheel cylinders.
	Skid Control ECU	Judges the vehicle driving condition based on signals from each sensor, and sends brake control signals to the brake actuator.
	Master Cylinder Pressure sensor	Assembled in the brake actuator and detects the master cylinder pressure.
Combination Meter	Brake System Warning Light	● Lights up to alert the driver when a malfunction occurs in the brake system. ● Lights up to alert the driver when the skid control ECU detects a malfunction in the EBD control. ● Lights up to inform the driver when the parking brake pedal depressed. ● Lights up to alert the driver when the brake fluid level decreased.
	ABS Warning Light	Lights up to alert the driver when the skid control ECU detects a malfunction in the ABS, EBD, or Brake Assist system.
	VSC Warning Light	Lights up to alert the driver when the skid control ECU detects a malfunction in the TRC or VSC.
	Slip Indicator Light	Blinks to inform the driver when the TRC or VSC is operated.
Speed Sensor (FL, FR, RL, RR)		Detects the wheel speed of each wheels.
Steering Angle Sensor		Detects the steering direction and angle of the steering wheel.
Yaw Rate & Deceleration Sensor		● Detects the vehicle's yaw rate. ● Detects the vehicle's acceleration in the forward, rearward, and lateral.
Stop Light Switch		Detects the brake pedal depressing signal.
VSC Warning Buzzer		Sounds intermittently to inform the driver that the VSC is actives.
Engine ECU		Controls the throttle valve opening angle based on the signals receives from the skid control ECU, in order to control the engine output. Also, sends the throttle valve opening angle signal, accelerator pedal position signal, and engine speed signal to the skid control ECU.
Throttle Position Sensor		Detects the opening of the throttle valve and inputs it into the engine ECU.
Accelerator Pedal Position Sensor		Detects the depressing of the accelerator pedal and inputs it into the engine ECU.
Crankshaft Position Sensor		Detects the engine speed, and sends it via the engine ECU to the skid control ECU.
Throttle Control Motor		Controls the opening of the throttle valve in accordance with the signals received from the engine ECU.

8. Construction and Operation of Main Components

Brake Actuator

1) General

- A brake actuator with an integrated skid control ECU has been adopted.
- The orifice has been added in the solenoid valve of ABS brake actuator to reduce the pulsation of fluid which generates by opening and closing the valve. As a result of this, the operating sound has been reduced to achieve quietness.
- The brake actuator consists of 10 two-position solenoid valves, 2 pressure regulator valves, 1 pump motor, 2 reservoirs, and master cylinder pressure sensor.

  The 10 two-position solenoid valves consists of the following:

  – 2 master cylinder cut solenoid valves (linear type) [(1), (2)]

  – 4 pressure holding solenoid valves [(3), (4), (5), (6)]

  – 4 pressure reduction solenoid valves [(7), (8), (9), (10)]

▶ Hydraulic Circuit ◀

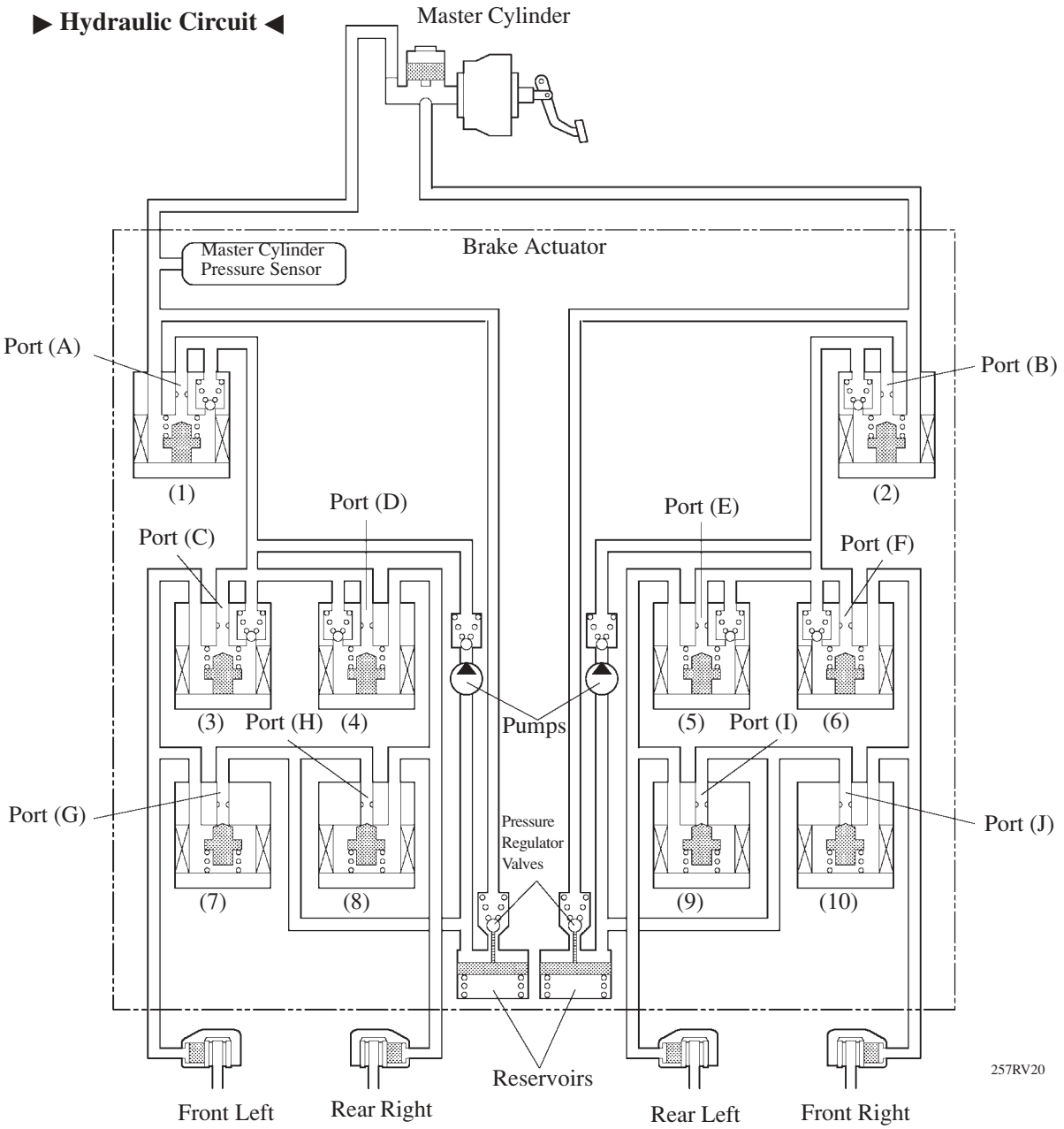

▶ Function of Main Components ◀

Component		Function
(1), (2)	Master Cylinder Cut Solenoid Valve (Linear Type)	To effect the respective brake controls of the Brake Assist, TRC, and VSC system, a combination of the ON/OFF conditions of the master cylinder cut solenoid valve is used to appropriately vary the fluid pressure.
(3), (4), (5), (6)	Pressure Holding Valve	Each wheel cylinder contains a pressure holding solenoid valve and a pressure reduction solenoid valve. A combination of the ON/OFF conditions of the respective valves is used in order to change the increase mode, holding mode, or the reduction mode during the operation of the ABS, TRC and VSC system.
(7), (8), (9), (10)	Pressure Reduction Valve	
Master Cylinder Pressure Sensor		The master cylinder pressure sensor converts the brake fluid pressure that the master cylinder applies to the brake actuator into an electrical signal and sends it to the skid control ECU. The skid control ECU can thus monitor the brake fluid pressure that is applied to the brake actuator in accordance with this signal.
Reservoir		While effecting the reduction mode during the operation of the ABS, TRC, and VSC system, the reservoir stores the brake fluid that has returned from the wheel cylinders. It also functions as an accumulator.
Pump		Pumps the brake fluid that is stored in the reservoir and returns it to the master cylinder. While effecting the increase mode during the operating of the Brake Assist, TRC and VSC system, the pump operates in order to apply brake fluid pressure to the wheel cylinders.
Pressure Regulator Valve		Regulates the pressure of the fluid supplied to the pump, and closes the pressure passage between the master cylinder and the pump when the brake pedal is depressed.

2) Pump and Reservoir

- The trochoid gear type pump has been newly adopted, to reduce operating noise.

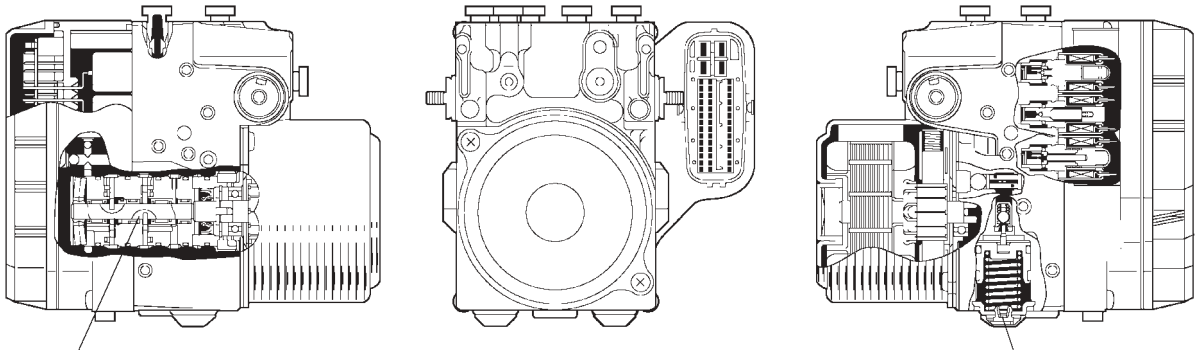

Actuator for VSC

241CH59

- The pressure regulator valve has been adopted in the reservoir for the purpose of regulating the pressure of the fluid to be supplied to the pump and to close the passage between the pump and the master cylinder during braking.

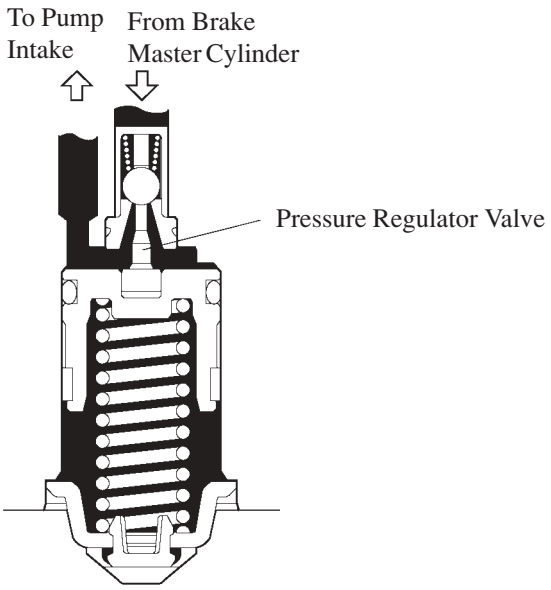

Reservoir Cross Section

241CH60

ABS with EBD Operation

Based on the signals received from the 4 wheel speed sensors and yaw rate & deceleration sensor, the skid control ECU calculates each wheel speed and deceleration, and checks wheel slipping condition. According to the slipping condition, the ECU controls the pressure holding solenoid valve and pressure reduction solenoid valve in order to adjust the fluid pressure of each wheel cylinder in the following 3 modes: pressure reduction, pressure holding, and pressure increase modes.

Not Activated	Normal Braking	—	—
Activated	Increase Mode	Holding Mode	Reduction Mode
Hydraulic Circuit	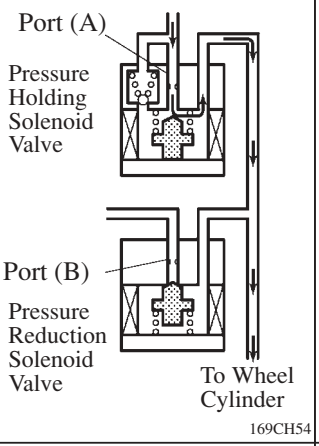	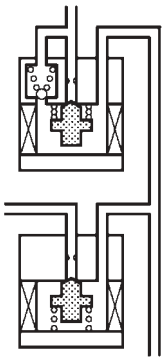	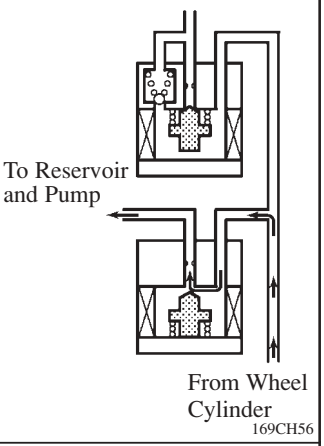
Pressure Holding Valve (Port A)	OFF (Open)	ON (Close)	ON (Close)
Pressure Reduction Valve (Port B)	OFF (Close)	OFF (Close)	ON (Open)
Wheel Cylinder Pressure	Increase	Hold	Reduction

Brake Assist Operation

In the event of emergency braking, the skid control ECU detects the driver's intention based on the speed of the pressure increase in the master cylinder determined by the pressure sensor signal. If the ECU judges the need for the additional brake assist, the fluid pressure is generated by the pump in the actuator and directed to the wheel cylinder to apply a greater fluid pressure than the master cylinder.

▶ System Diagram ◀

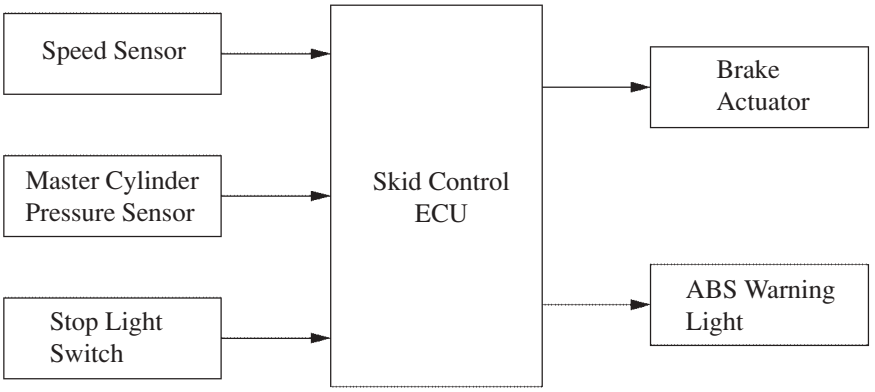

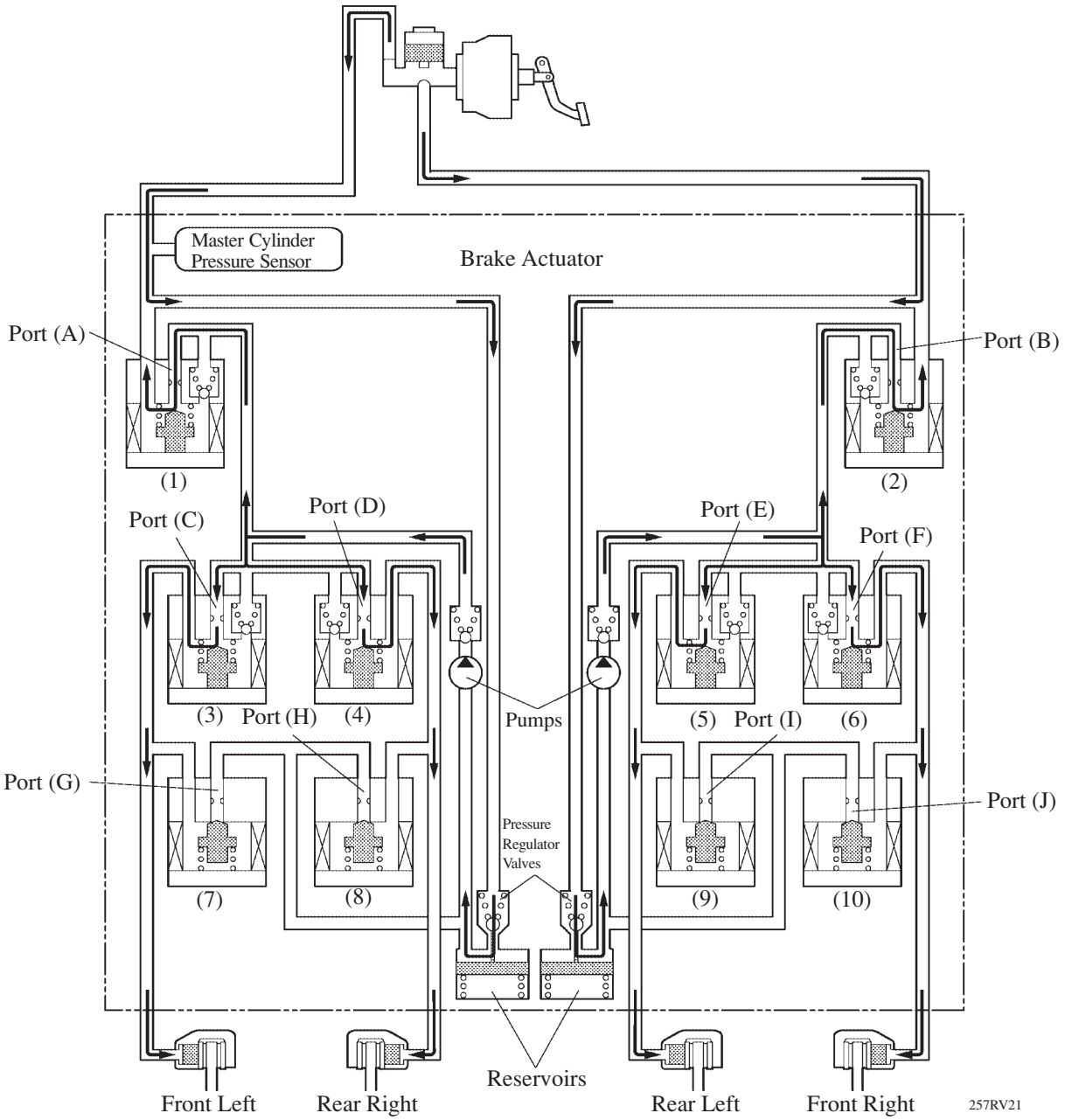

Brake Assist Activated

Item		Brake Assist Not Activated	Brake Assist Activated
(1), (2)	Master Cylinder Cut Solenoid Valve	OFF (Open)	ON*
	Port: (A), (B)		
(3), (4), (5), (6)	Pressure Holding Solenoid Valve	OFF (Open)	OFF (Open)
	Port: (C), (D), (E), (F)		
(7), (8), (9), (10)	Pressure Reduction Solenoid Valve	OFF (Close)	OFF (Close)
	Port: (G), (H), (I), (J)		

*: The solenoid valve controls the hydraulic pressure between “open” through “close” according to the operating condition by adjusting continually.

TRC Operation

The fluid pressure generated by the pump is regulated by the master cylinder cut solenoid valve to the required pressure. Thus, the wheel cylinders of the drive wheels are controlled in the following 3 modes: pressure reduction, pressure holding, and pressure increase modes, to control the slippage of the drive wheels.

The diagram below shows the hydraulic circuit in the pressure increase mode when the TRC system is activated.

The pressure holding solenoid valve and the pressure reduction solenoid valve are turned ON/OFF according to the ABS operation pattern described on the previous page.

▶ System Diagram ◀

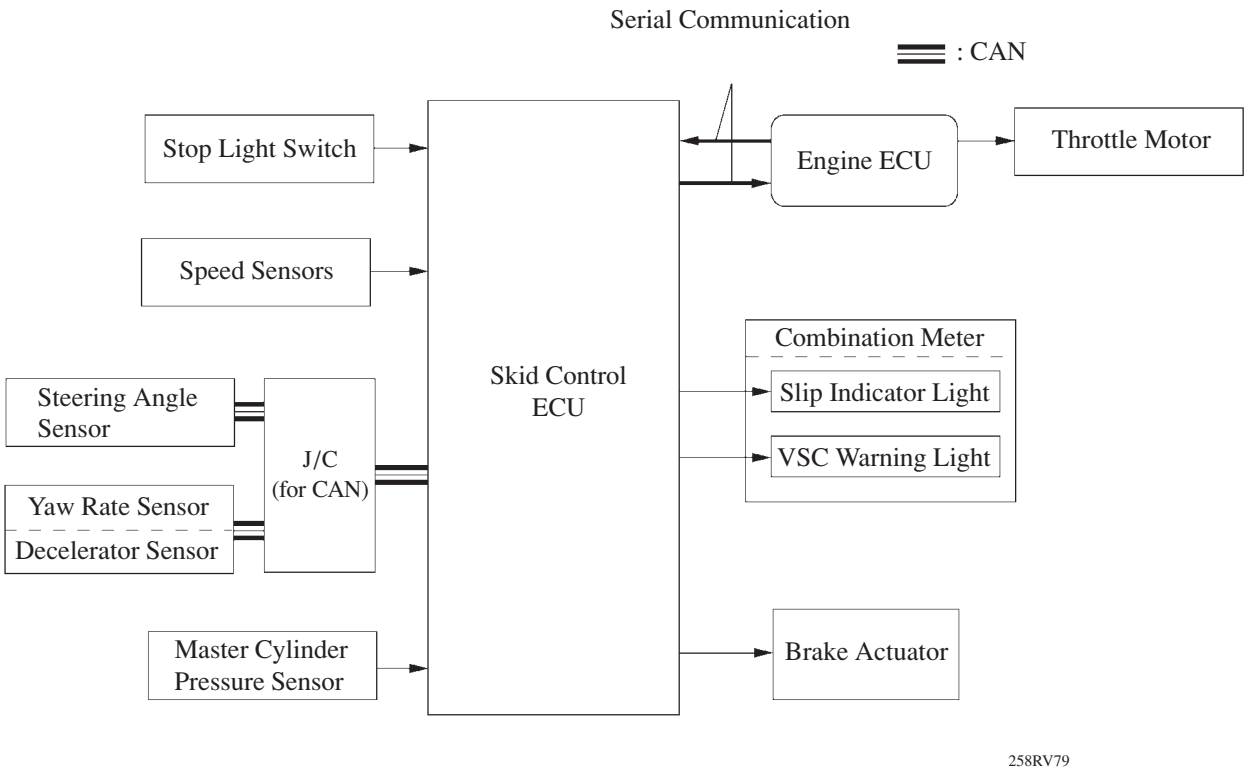

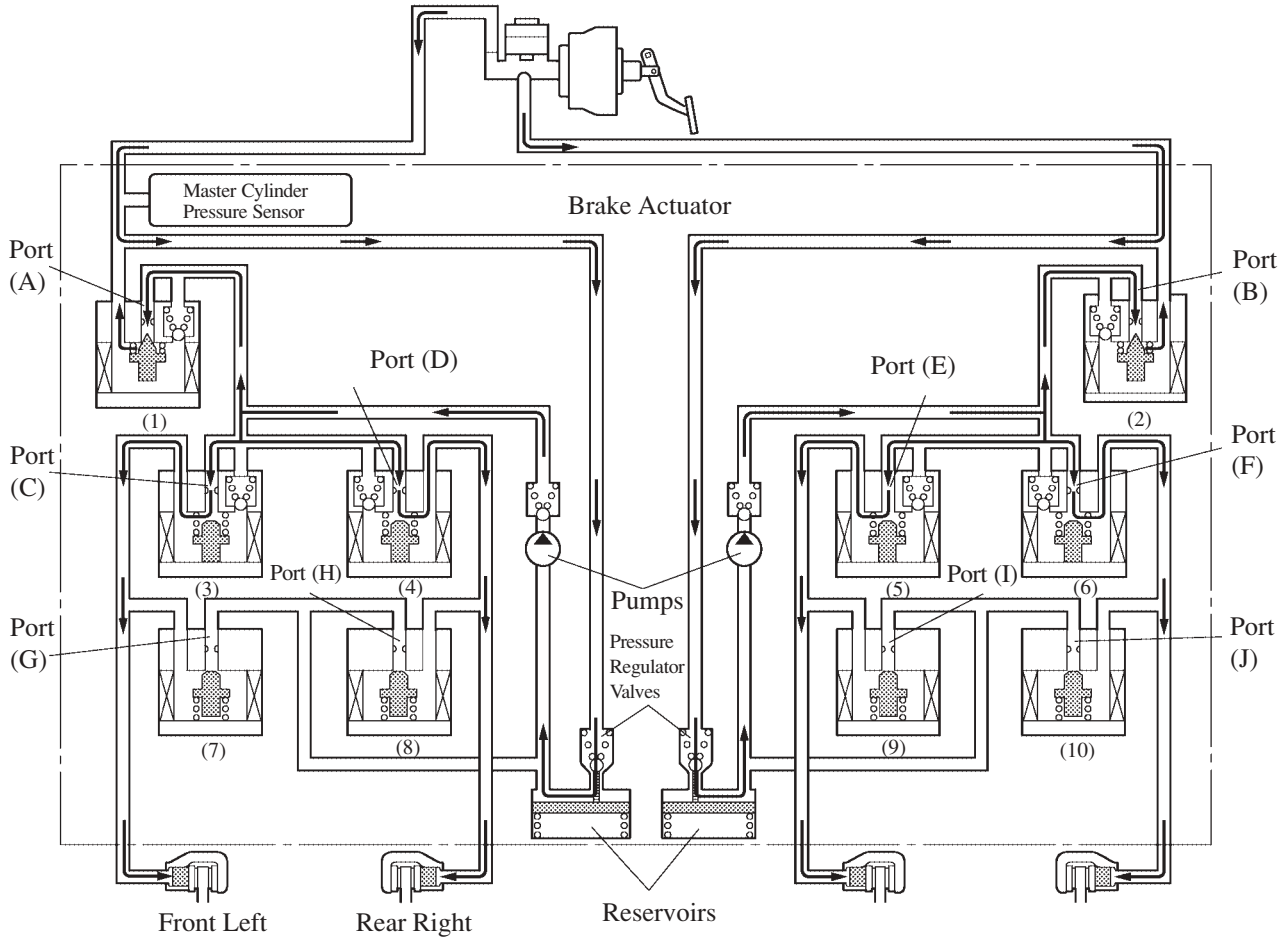

Increase Mode

257RV51

Item			TRC not Activated	TRC Activated		
				Increase Mode	Holding Mode	Reduction Mode
(1), (2)	Master Cylinder Cut Solenoid Valve		OFF (Open)	ON*	ON*	ON*
	Port: (A), (B)					
Front Brake	(3), (6)	Pressure Holding Solenoid Valve	OFF (Open)	OFF (Open)	OFF (Open)	ON (Close)
		Port: (C), (F)				
	(7), (10)	Pressure Reduction Solenoid Valve	OFF (Close)	OFF (Close)	OFF (Close)	ON (Open)
		Port: (G), (J)				
	Wheel Cylinder Pressure		—	Increase	Holding	Reduce
Rear Brake	(4), (5)	Pressure Holding Solenoid Valve	OFF (Open)	OFF (Open)	ON (Close)	ON (Close)
		Port: (D), (E)				
	(8), (9)	Pressure Reduction Solenoid Valve	OFF (Close)	OFF (Close)	OFF (Close)	ON (Open)
		Port: (H), (I)				
	Wheel Cylinder Pressure		—	Increase	Holding	Reduce

*: The solenoid valve controls the hydraulic pressure between “open” through “close” according to the operating condition by adjusting continually.

VSC Operation

1) General

The VSC system, by way of solenoid valves, controls the fluid pressure that is generated by the pump and applies it to the brake wheel cylinder of each wheel in the following 3 modes: pressure reduction, pressure holding, and pressure increase modes. As a result, the tendency to front wheel skid or rear wheel skid is controlled.

▶ System Diagram ◀

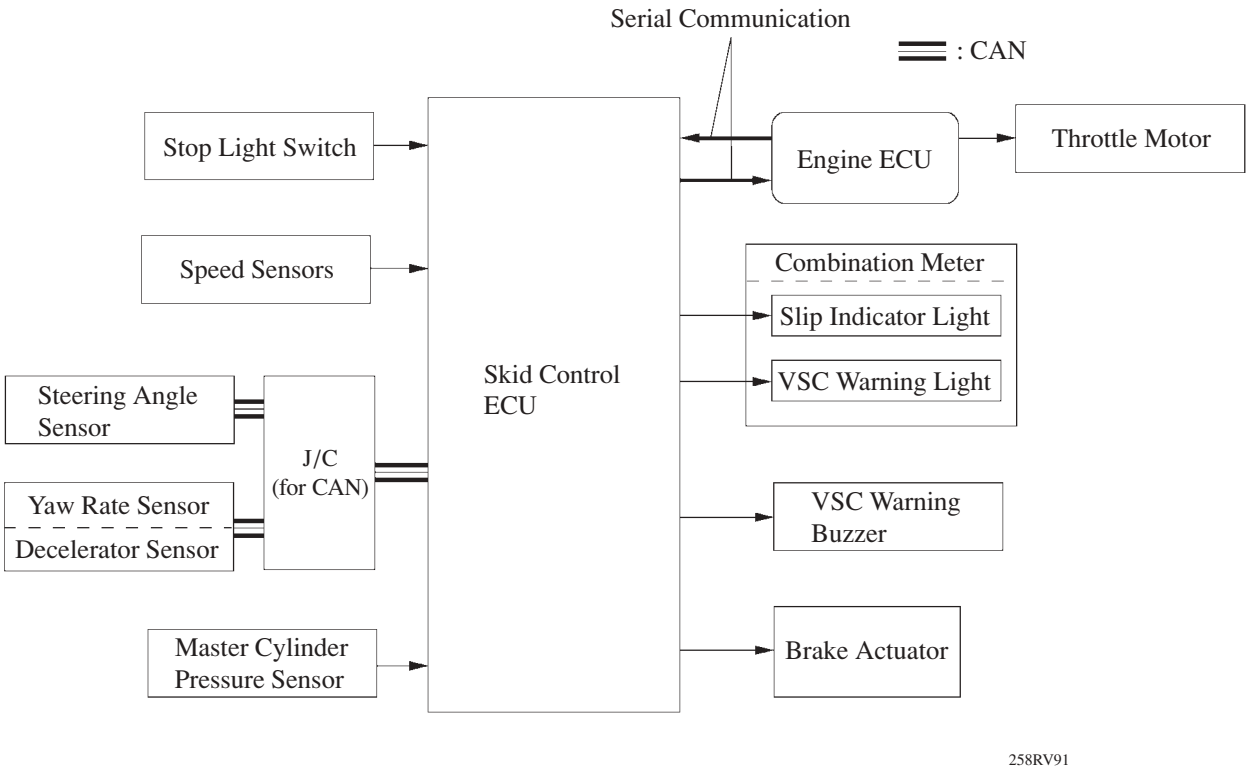

2) Front Wheel Skid Control (Turn to the Right)

In the front wheel skid control, the brakes of the front wheels and the rear wheel of the inner circle of the turn are applied.

Also, depending on whether the brake is ON or OFF and the condition of the vehicle, there are circumstances in which the brake might not be applied to the wheels even if those wheels are targeted for braking.

The diagram below shows the hydraulic circuit in the pressure increase mode, as it controls the front wheel skid condition while the vehicle makes a right turn.

The pressure holding solenoid valve and the pressure reduction solenoid valve are turned ON/OFF according to the ABS operation pattern.

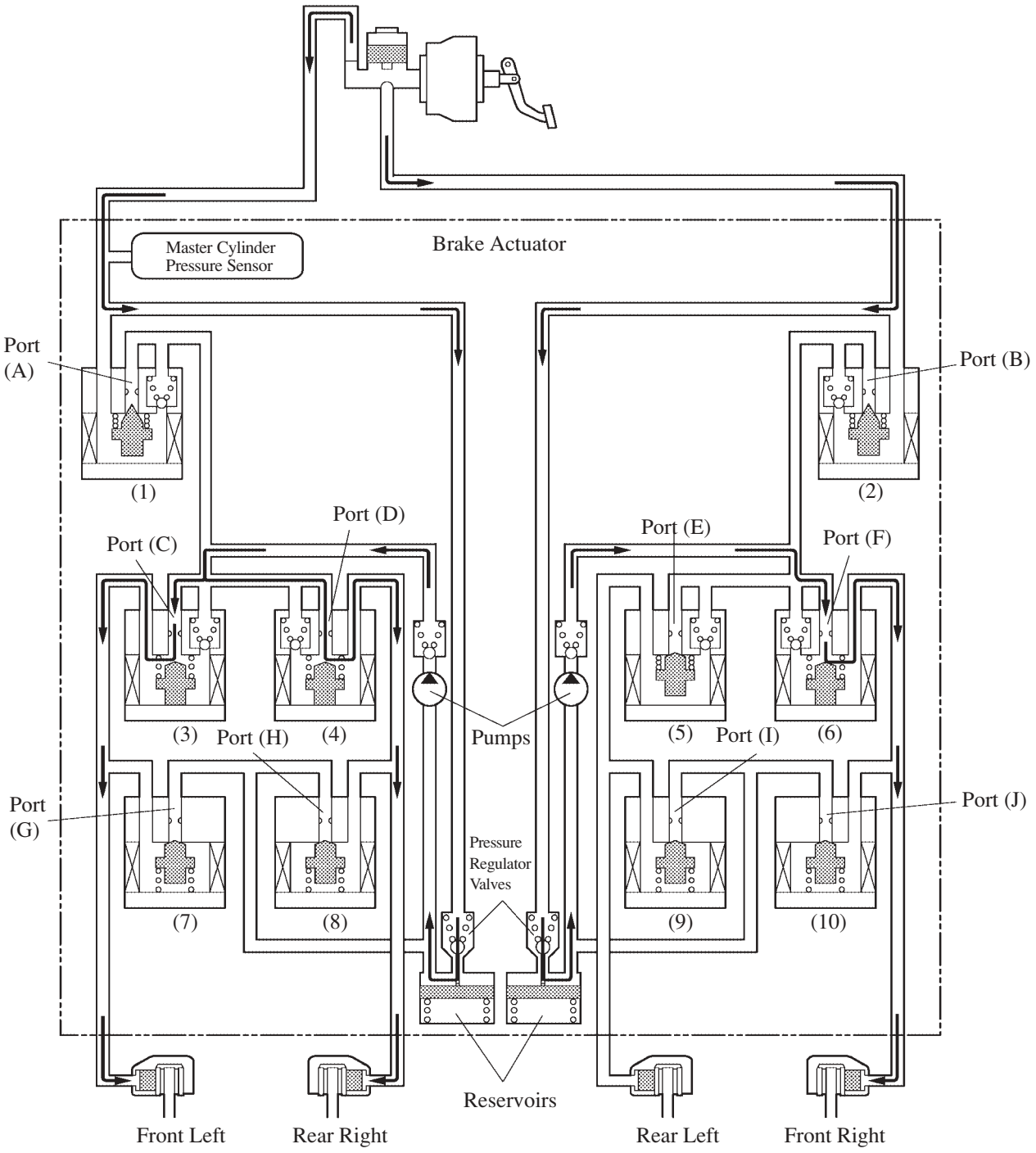

Increase Mode

257RV52

Item			VSC not Activated	VSC Activated		
				Increase Mode	Holding Mode	Reduction Mode
(1), (2)	Master Cylinder Cut Solenoid Valve Port: (A), (B)		OFF (Open)	ON	ON	ON
Front Brake	(3)	Pressure Holding Solenoid Valve Port: (C)	OFF (Open)	OFF (Open)	ON (Close)	ON (Close)
	(6)	Pressure Holding Solenoid Valve Port: (F)	OFF (Open)	OFF (Open)	ON (Close)	ON (Close)
	(7)	Pressure Reduction Solenoid Valve Port: (G)	OFF (Close)	OFF (Close)	OFF (Close)	ON (Open)
	(10)	Pressure Reduction Solenoid Valve Port: (J)	OFF (Close)	OFF (Close)	OFF (Close)	ON (Open)
	Wheel Cylinder Pressure	Right	—	Increase	Holding	Reduce
		Left	—	Increase	Holding	Reduce
Rear Brake	(4)	Pressure Holding Solenoid Valve Port: (D)	OFF (Open)	OFF (Open)	ON (Close)	ON (Close)
	(5)	Pressure Holding Solenoid Valve Port: (E)	OFF (Open)	ON (Close)	ON (Close)	ON (Close)
	(8)	Pressure Reduction Solenoid Valve Port: (H)	OFF (Close)	OFF (Close)	OFF (Close)	ON (Open)
	(9)	Pressure Reduction Solenoid Valve Port: (I)	OFF (Close)	OFF (Close)	OFF (Close)	OFF (Close)
	Wheel Cylinder Pressure	Right	—	Increase	Holding	Reduce
		Left	—	—	—	—

3) Rear Wheel Skid Control (Turn to the Right)

In rear wheel skid control, the brake of the front wheel of the outer circle of the turn is applied. As an example, the diagram below shows the hydraulic circuit in the pressure increase mode, as it controls the rear wheel skid condition while the vehicle make a right turn.

As in front wheel skid control the pressure holding solenoid valve and the pressure reduction solenoid valve are turned ON/OFF according to the ABS operating pattern.

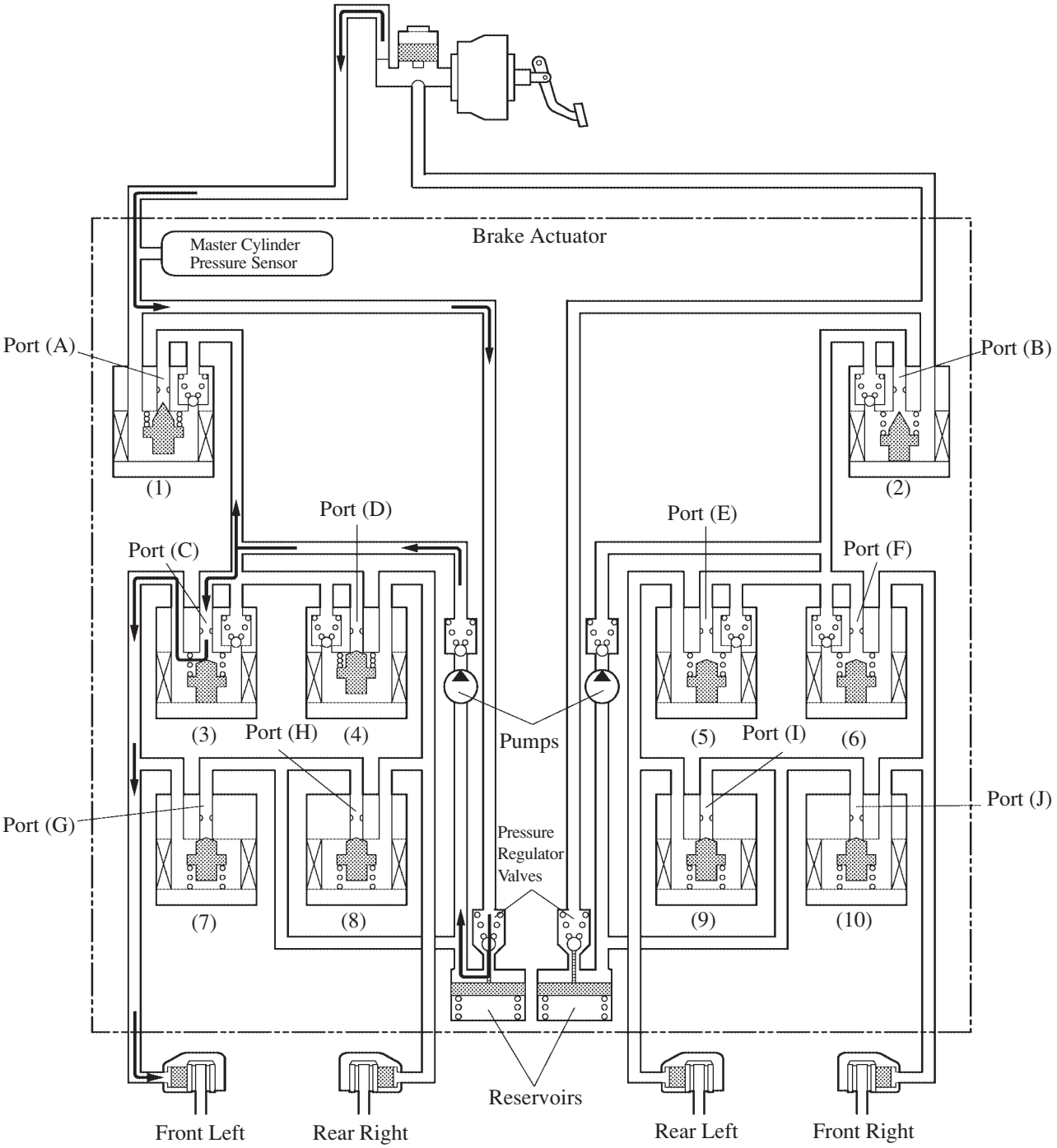

Increase Mode

257RV53

10

Item			VSC not Activated	VSC Activated		
				Increase Mode	Holding Mode	Reduction Mode
(1)	Master Cylinder Cut Solenoid Valve		OFF (Open)	ON (Close)	ON (Close)	ON (Close)
	Port: (A)					
(2)	Master Cylinder Cut Solenoid Valve		OFF (Open)	OFF (Open)	OFF (Open)	OFF (Open)
	Port: (B)					
Front Brake	(3)	Pressure Holding Solenoid Valve	OFF (Open)	OFF (Open)	ON (Close)	ON (Close)
		Port: (C)				
	(6)	Pressure Holding Solenoid Valve	OFF (Open)	OFF (Open)	OFF (Open)	OFF (Open)
		Port: (F)				
	(7)	Pressure Reduction Solenoid Valve	OFF (Close)	OFF (Close)	OFF (Close)	ON (Open)
		Port: (G)				
	(10)	Pressure Reduction Solenoid Valve	OFF (Close)	OFF (Close)	OFF (Close)	OFF (Close)
		Port: (J)				
	Wheel Cylinder Pressure	Right	—	—	—	—
		Left	—	Increase	Holding	Reduce
Rear Brake	(4)	Pressure Holding Solenoid Valve	OFF (Open)	ON Close)	ON (Close)	ON (Close)
		Port: (D)				
	(5)	Pressure Holding Solenoid Valve	OFF (Open)	OFF (Open)	ON (Close)	ON (Close)
		Port: (E)				
	(8)	Pressure Reduction Solenoid Valve	OFF (Close)	OFF (Close)	OFF (Close)	OFF (Close)
		Port: (H)				
	(9)	Pressure Reduction Solenoid Valve	OFF (Close)	OFF (Close)	OFF (Close)	OFF (Close)
		Port: (I)				
	Wheel Cylinder Pressure	Right	—	—	—	—
		Left	—	—	—	—

4) Control During Cornering Braking (Turn to the Right)

During cornering braking, the pressure holding valve (3) and the pressure reduction valve (7) are inactive. However, because the pump is operating, the brake fluid pressure in the left front wheel cylinder increases. At the same time, the pressure holding valve (4) and the pressure reduction valve (8) turn ON and OFF in the pressure increase, pressure holding, and pressure reduction modes, in order to control the brake fluid pressure applied to the right rear wheel cylinder.

The master cylinder cut solenoid valve (2) regulates the master cylinder fluid pressure applied to the right front wheel cylinder and the left rear wheel cylinder. Because the pressure holding valves (5) and (6) and the pressure reduction valves (9) and (10) are inactive at this time, the master cylinder fluid pressure acts on the right front wheel cylinder and the left rear wheel cylinder.

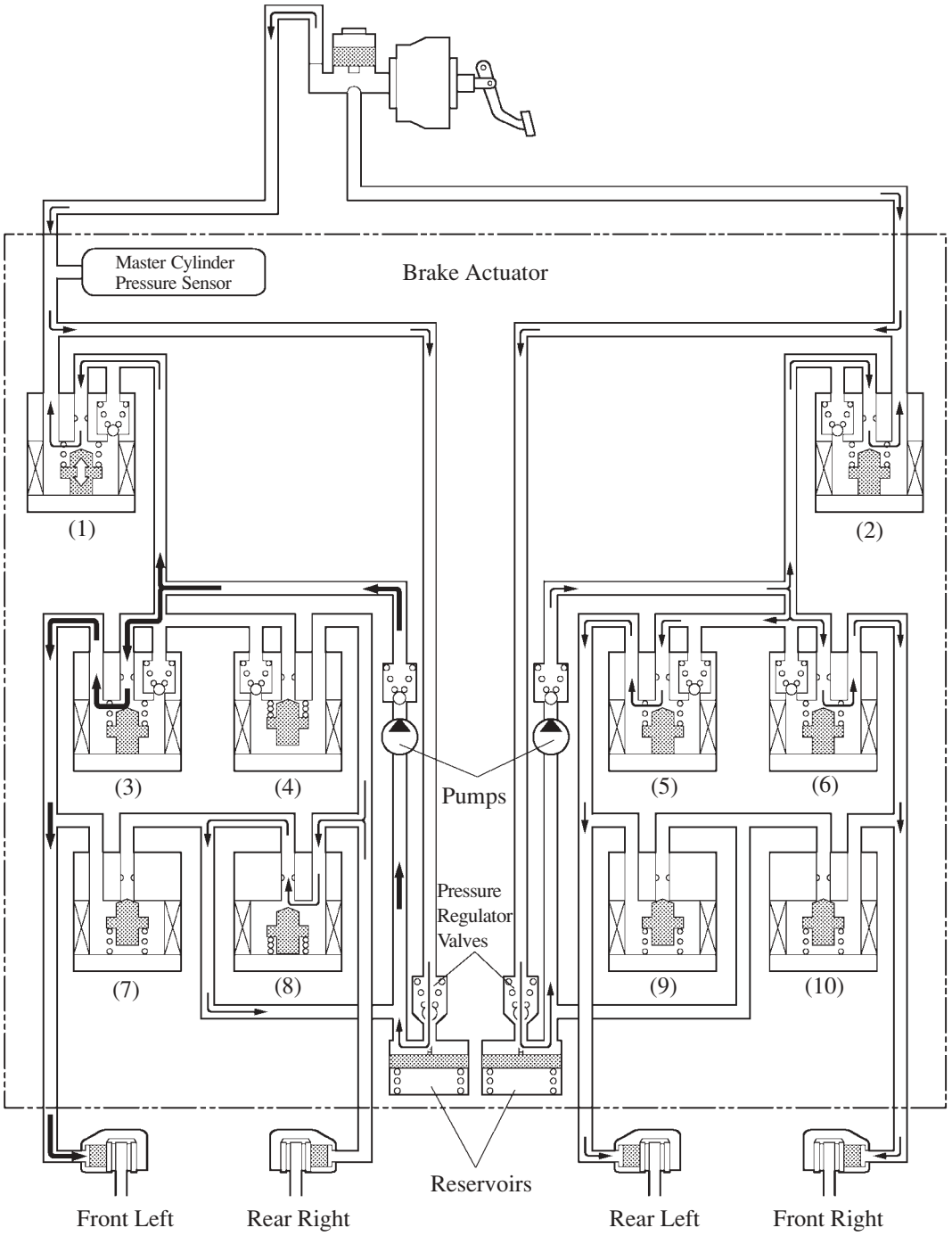

Increase Mode

Item			VSC Activated		
			Increase Mode	Holding Mode	Reduction Mode
(1)	Master Cylinder Cut Solenoid Valve		ON*1	ON*1	ON*1
(2)	Master Cylinder Cut Solenoid Valve		—*2	—*2	—*2
Front Brake	Wheel Cylinder Pressure	Right	—*3	—	—
		Left	Increase	—	—
Rear Brake	(4)	Pressure Holding Solenoid Valve	OFF (Open)	ON (Close)	ON (Close)
	(5)	Pressure Holding Solenoid Valve	—*1	—*1	—*1
	(8)	Pressure Reduction Solenoid Valve	OFF (Close)	OFF (Close)	ON (Open)
	(9)	Pressure Reduction Solenoid Valve	—*1	—*1	—*1
	Wheel Cylinder Pressure	Right	Increase	Holding	Reduce
		Left	—*3	—*3	—*3

*1: The solenoid valve controls the hydraulic pressure between “open” through “close” according to the operating condition by adjusting continually.

*2: Indicates an inactive condition.

*3: The master cylinder pressure acts on it.

5) Control During High-Speed

During high-speed braking, the system turns ON/OFF (pressurization/depressurization) the pressure holding valves (4) and (5), and the pressure reduction valves (8) and (9) depend on the vehicle condition. Because the pressure holding valves (3) and (6) and the pressure reduction valves (7) and (10) are inactive (the pressure holding valves are ON and the pressure reduction valves are OFF) at this time, the pump increases the fluid pressure of braking force which correspond is to the fluid pressure reduced at the rear wheel cylinders, in the front wheel cylinder.

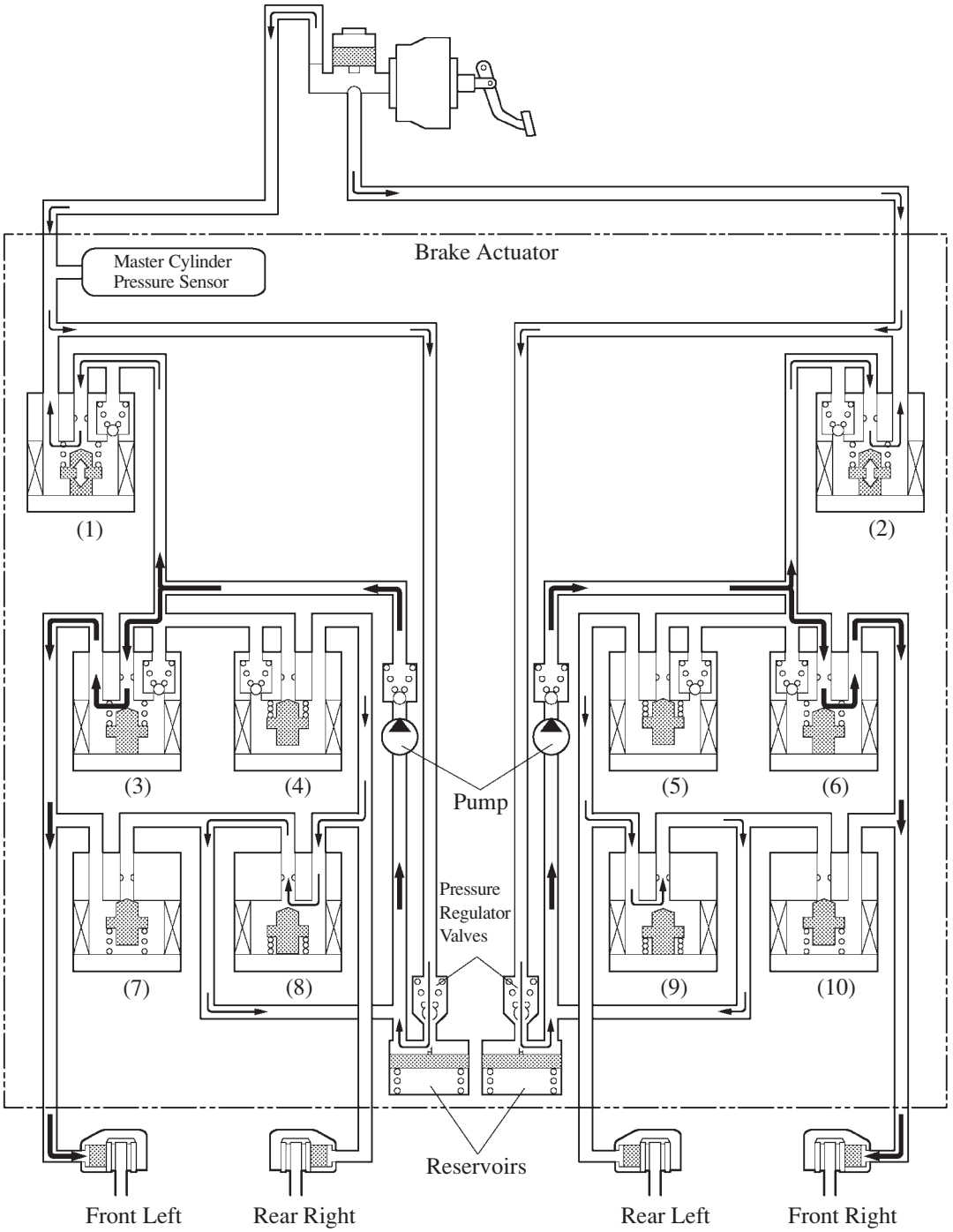

257RV43

Increase Mode

Item			VSC Activated		
			Increase Mode	Holding Mode	Reduction Mode
(1)	Master Cylinder Cut Solenoid Valve		ON*	ON*	ON*
(2)	Master Cylinder Cut Solenoid Valve		ON*	ON*	ON*
Front Brake	Wheel Cylinder Pressure	Right	Increase	—	—
		Left	Increase	—	—
Rear Brake	(4)	Pressure Holding Solenoid Valve	OFF (Open)	ON (Close)	ON (Close)
	(5)	Pressure Holding Solenoid Valve	OFF (Open)	ON (Close)	ON (Close)
	(8)	Pressure Reduction Solenoid Valve	OFF (Close)	OFF (Close)	ON (Open)
	(9)	Pressure Reduction Solenoid Valve	OFF (Close)	OFF (Close)	ON (Open)
	Wheel Cylinder Pressure	Right	Increase	Holding	Reduce
		Left	Increase	Holding	Reduce

*: The solenoid valve controls the hydraulic pressure between “open” through “close” according to the operating condition by adjusting continually.

9. Skid Control ECU

VSC

Based on the 4 different sensor signals received from the speed sensors, yaw rate & deceleration sensor and steering angle sensor, the skid control ECU calculates the vehicle condition.
If a strong front wheel skid or rear wheel skid tendency is created during an emergency avoidance maneuver or cornering, and the skid control ECU determines that the amount of vehicle condition exceeds a prescribed value, it controls the engine torque through throttle and the brake fluid pressure according to the amount of needed to control the vehicle.

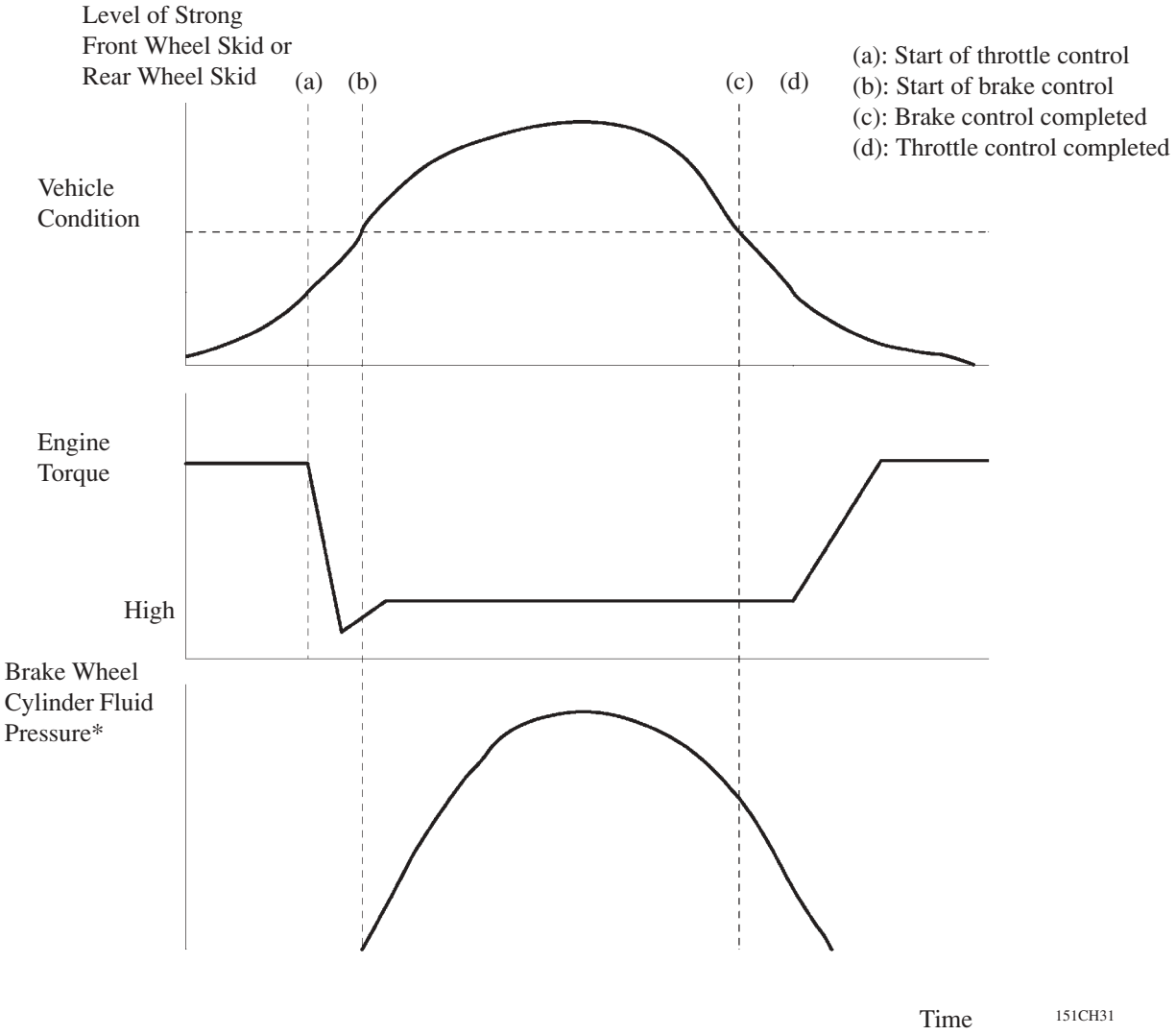

*: The wheel cylinder that activates varies depending on the condition of the vehicle.

Initial Check

Each time the ignition switch is turned ON, and the vehicle reaches approximately speed of 6 km/h (4 mph) or more, the skid control ECU performs the initial check.
The functions of each solenoid valve and pump motor in the brake actuator are checked in order.

Self-Diagnosis

- If the skid control ECU detects a malfunction in the ABS with EBD, Brake Assist, TRC and VSC systems, the ABS, brake system and VSC warning lights that corresponds to the function in which the malfunction has been detected lights up, as indicated in the table below, to alert the driver of the malfunction.

○: Light ON —: Light OFF

Item	ABS	EBD	Brake Assist	TRC	VSC
ABS Warning Light	○	—	○	—	—
Brake System Warning Light	—	○	—	—	—
VSC Warning Light	—	—	—	○	○

- At the same time, the DTC (Diagnostic Trouble Code) are stored in memory. The DTC can be read by connecting the SST (09843-18040) between the Tc and CG terminals DLC3, and observing the blinking of the ABS and VSC warning light (2-digit code), or by connecting a hand-held tester (5-digit code).
- This system has a sensor signal check (test mode) function. This function is activated by connecting the SST (09843-18040) between the Ts and CG terminals of the DLC3 or by connecting a hand-held tester. This check function performs yaw rate sensor zero point calibration, deceleration sensor zero point calibration, yaw rate sensor check, master cylinder pressure sensor check, and speed sensor check.
- If the skid control ECU detects a malfunction during a sensor check, it stores the DTC in its memory. This DTC can be read during a sensor signal check operation by connecting the Tc and CG terminals of the DLC3 and observing the blinking of the ABS warning light and the VSC warning light, or on a hand-held tester.
- If the CAN has communication error at ECU or sensors, multiple DTCs (Diagnostic Trouble Codes) are output simultaneously to indicate the malfunction location. For detail, refer to see page 522.
  For details on the DTC that are stored in skid control ECU memory and the DTC that are output through the sensor check function, see the RAV4 Repair Manual Supplement (Pub. No.RM1078E).

▶ DTC Chart (blinking ABS warning light) ◀

DTC No.		Detection Item	DTC No.		Detection Item
2-digit	5-digit		2-digit	5-digit	
11	C0278	Open circuit in ABS SOL relay circuit	38	C1238	Foreign matter in attached on the tip of the right rear sensor
12	C0279	Short circuit in ABS SOL relay circuit	39	C1239	Foreign matter in attached on the tip of the left rear sensor
13	C0273	Open circuit in ABS MTR relay circuit	41	C1241	Low battery positive voltage
14	C0274	Short circuit in ABS MTR relay circuit	43	C1243	Malfunction in deceleration sensor (constant output)
21	C0226	Open or short circuit in brake actuator solenoid circuit (SFR circuit)	44	C1244	Malfunction in deceleration sensor
22	C0236	Open or short circuit in brake actuator solenoid circuit (SFL circuit)	45	C1245	Malfunction in deceleration sensor
23	C0246	Open or short circuit in brake actuator solenoid circuit (SRR circuit)	46	C1246	Malfunction in master cylinder pressure sensor
24	C0256	Open or short circuit in brake actuator solenoid circuit (SRL circuit)	49	C1249	Open circuit in stop light switch circuit
25	C1225	Open or short circuit of brake actuator solenoid circuit (SM circuit)	51	C1251	● ABS pump motor is locked ● Open circuit in pump motor circuit
31	C0200	Right front wheel speed sensor signal malfunction	91	C1361	Short circuit in ABS motor fail safe relay circuit
32	C0205	Left front wheel speed sensor signal malfunction	94	U0073	Malfunction in CAN communication
33	C0210	Right rear wheel speed sensor signal malfunction	95	U0124	Malfunction in CAN communication with deceleration sensor
34	C0215	Left rear wheel speed sensor signal malfunction	97	C1381	Malfunction in power supply voltage yaw/deceleration sensor
35	C1235	Foreign matter in attached on the tip of the right front sensor	Always ON		● Malfunction in skid control ECU ● Open circuit in ABS warning light circuit
36	C1236	Foreign matter in attached on the tip of the left front sensor			

▶ DTC Chart of sensor check (blinking ABS warning light) ◀

DTC No.		Detection Item	DTC No.		Detection Item
2-digit	5-digit		2-digit	5-digit	
71	C1271	Low output voltage of right front speed sensor	76	C1276	Abnormal change in output voltage of left front speed sensor
72	C1272	Low output voltage of left front speed sensor	77	C1277	Abnormal change in output voltage of right rear speed sensor
73	C1273	Low output voltage of right rear speed sensor	78	C1278	Abnormal change in output voltage of left rear speed sensor
74	C1274	Low output voltage of left rear speed sensor	79	C1279	Deceleration sensor output voltage is faulty
75	C1275	Abnormal change in output voltage of right front speed sensor	81	C1281	Master cylinder pressure sensor output signal is faulty

▶ DTC Chart (blinking VSC warning light) ◀

DTC No.		Detection Item	DTC No.		Detection Item
2-digit	5-digit		2-digit	5-digit	
31	C1231	Malfunction in steering angle sensor	44	C1224	Open or short circuit in NEO signal circuit
32	C1232	Malfunction in deceleration sensor	51	C1201	Malfunction in engine ECU
34	C1234	Malfunction in yaw rate sensor	53	C1203	Malfunction in engine ECU communication circuit
36	C1210	Zero point calibration of yaw rate sensor undone	62	U0123	Malfunction in CAN communication with yaw rate sensor
39	C1336	Zero point calibration of deceleration sensor undone	63	U0126	Malfunction in CAN communication with steering angle sensor
43	C1223	Malfunction in ABS control system	Always ON		● Malfunction in skid control ECU ● Open circuit in VSC warning indicator circuit

▶ DTC Chart of sensor check (blinking VSC warning light) ◀

DTC No.		Detection Item
2-digit	5-digit	
71	C0371	Yaw rate sensor output signal is faulty

Fail-Safe

- In the event of a malfunction in the TRC and/or VSC, the skid control ECU prohibits the TRC and VSC operations.
- In the event of a malfunction in the ABS and/or Brake Assist, the skid control ECU prohibits the ABS, Brake Assist, TRC and VSC operations.
- In the event of the malfunction in the EBD control, skid control ECU prohibits the EBD control. Even in this case, usual braking performance besides the brake control system (ABS with EBD, Brake Assist, TRC and VSC) is secured.
- If a communication malfunction occurs between the skid control ECU and the steering angle sensor or the yaw rate & deceleration sensor, the skid control ECU stops control of the TRC and VSC.
- When the engine ECU detects a DTC, it will disable the TRC and VSC controls.

■POWER STEERING SYSTEM

The new model has adopted a new steering gear in order to realize an even more natural steering feel.

- Gear mount bushings with an internal-external cylindrical construction have been adopted on the steering gear unit in order to optimize the bushing characteristics.
- To reduce torque while turning the steering wheel at standstill and to ensure the proper steering feel while driving, the shaft control valve characteristics have been optimized.

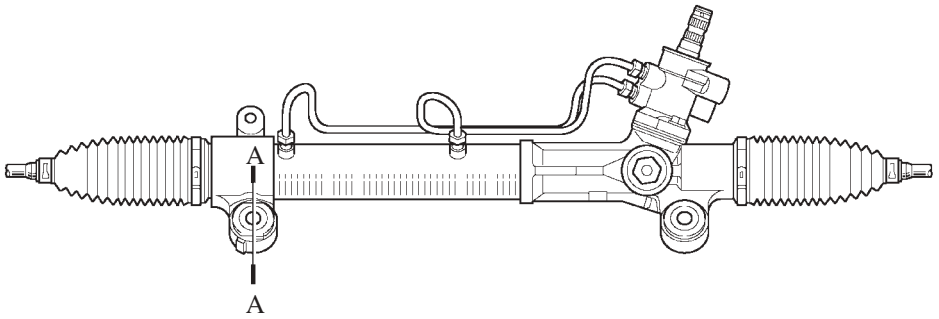

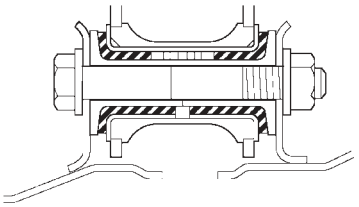

258RV47

A – A Cross Section

■BODY

1. Head Impact Protection

An energy absorbing reinforcement has been provided on the 5-door model with curtain shield airbags and a normal roof.

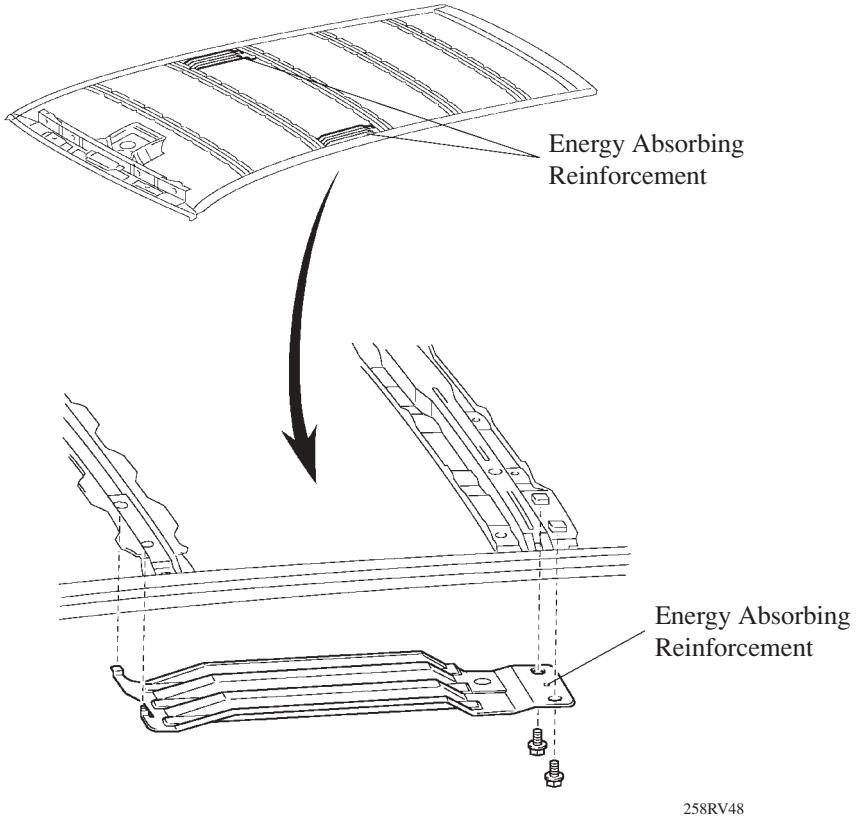

2. Low Vibration and Low Noise Body

On all models, impact energy absorbing pads have been provided in the dash area behind the floor carpet for realization of excellent safety.

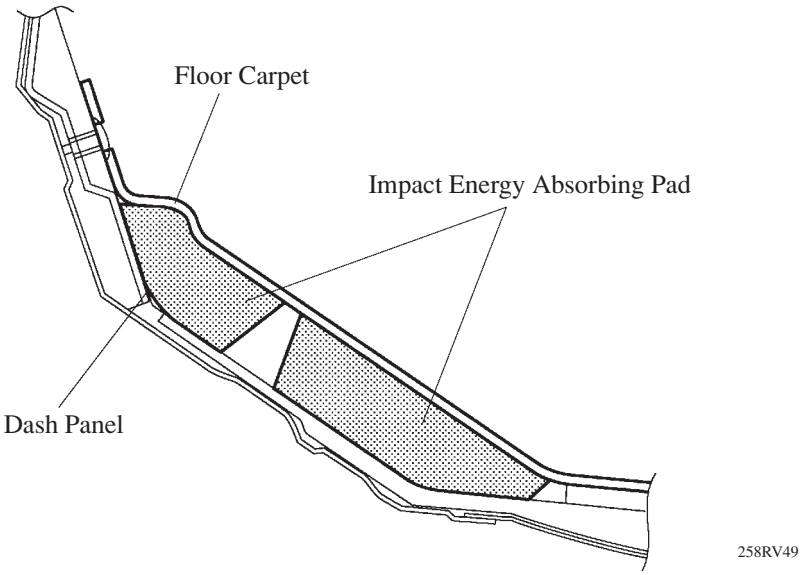

3. Dash Silencer and Door Trim

A dash silencer and door trims that offer sound absorption properties have been provided to improve the quietness in the vehicle.

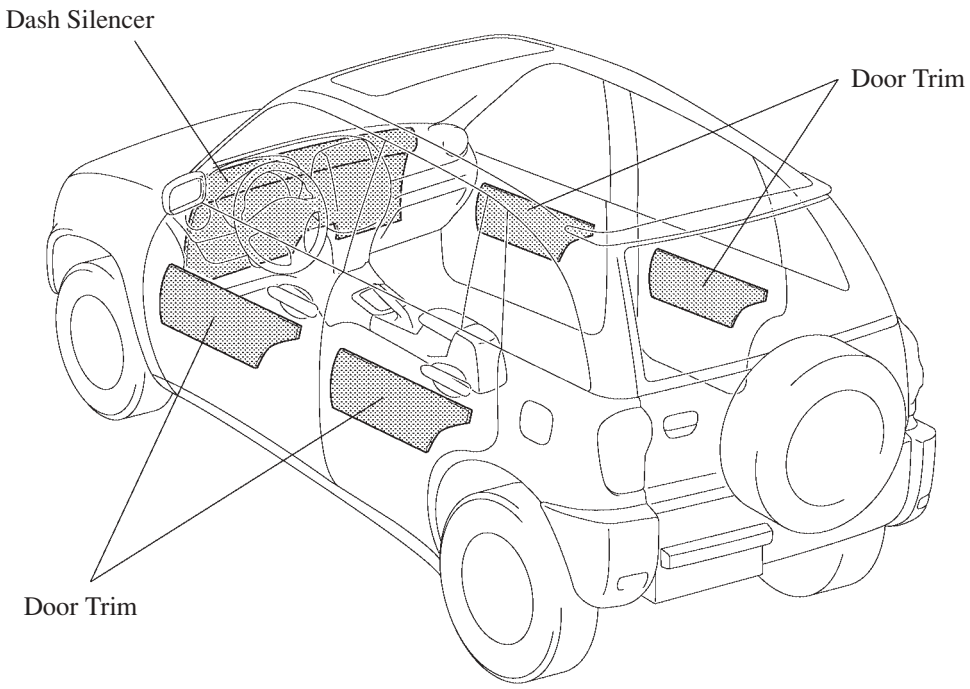

258RV50

4. Instrument Panel

To reduce the sound transmitted from the engine, sound insulation material (felt) has been provided in the instrument panel and the console, thus achieving the quietness in the vehicle.

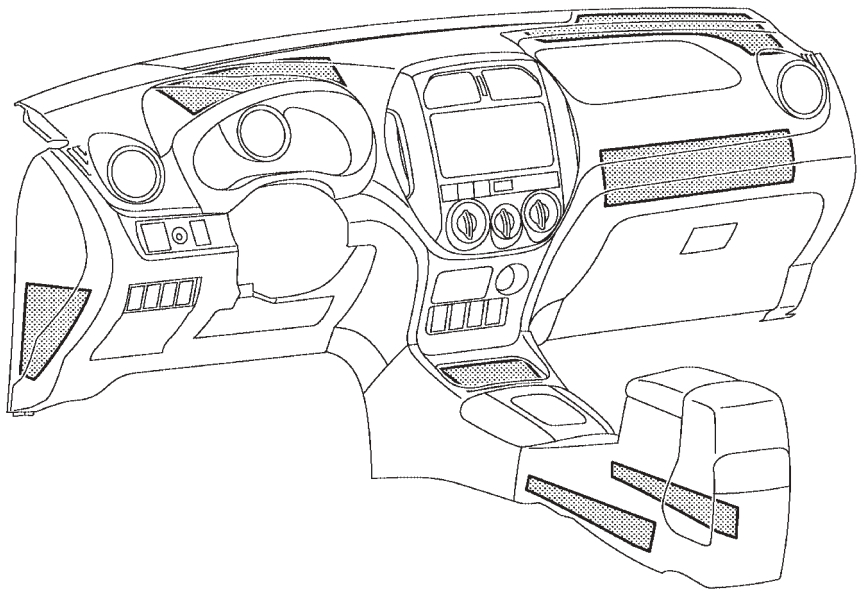

258RV51

■SEAT

1. Front Seat

To realize the excellent rigidity of the seat frame of the models equipped with seat side airbags and curtain-shield airbags, the construction of the seat frames and headrests has been changed. Accordingly, the shape of the outer shield has been changed.

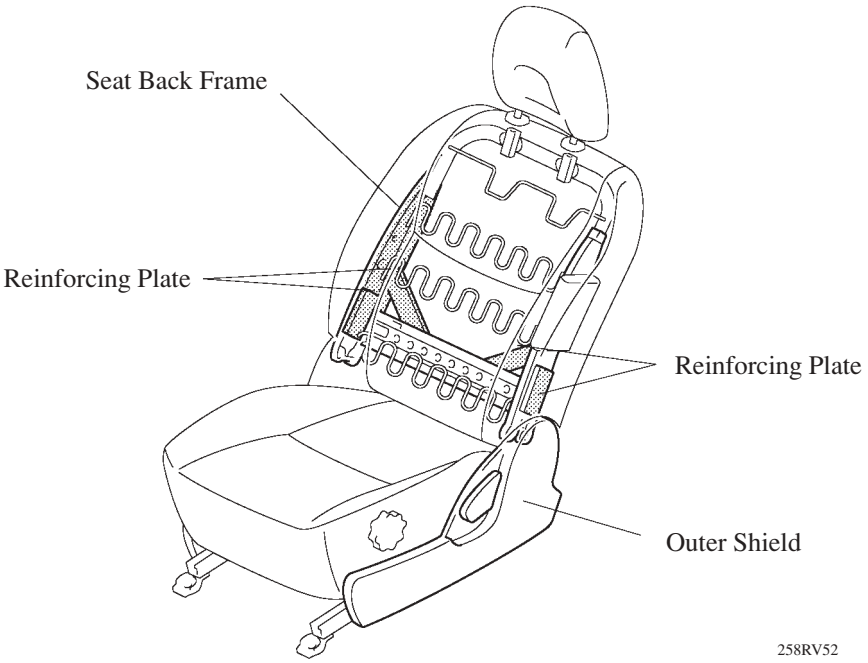

2. Rear Seat

A CRS (Child Restraint System) anchor bracket has been provided on the rear seat on Europe and Australia models.

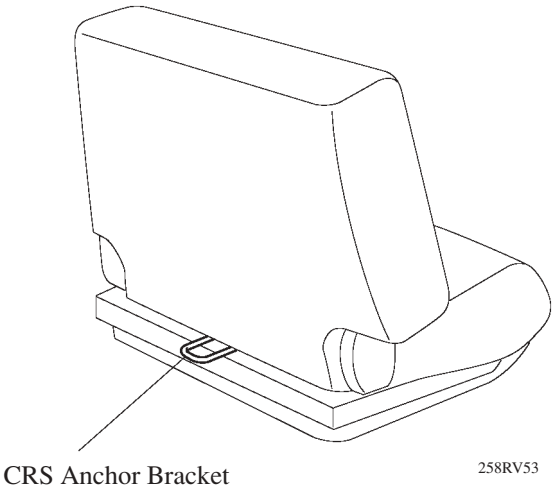

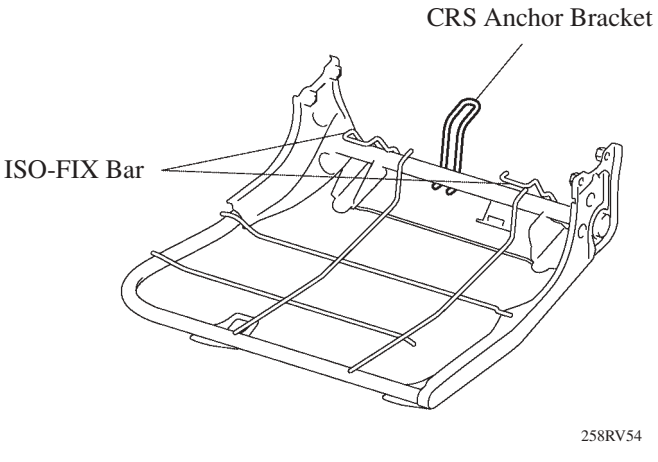

■MULTIPLEX COMMUNICATION

1. General

- The brake control system of the models equipped with VSC has adopted CAN (Controller Area Network) communication.
- CAN is a type of on-vehicle multiplex communication system that enables superior data communication and error detection between ECUs and sensors.
- CAN uses twisted-pair wires, which consist of two wires, CAN-H, and CAN-L, which have different voltages.
- The CAN in RAV4 is connected to the Skid Control ECU, steering angle sensor, yaw rate and deceleration sensor and DLC (Data Link Connector) 3.

▶ Characteristic ◀

- Simplifies the wiring harness routing because communication among the ECUs connected to CAN is made possible through the use of a pair of communication wires.
- Its communication speed is faster than the BEAN (Body Electronics Area Network) used on other models.

Communication Type	CAN	BEAN
Communication Speed	500 Kbps	MAX: 10 Kbps

▶ System Diagram ◀

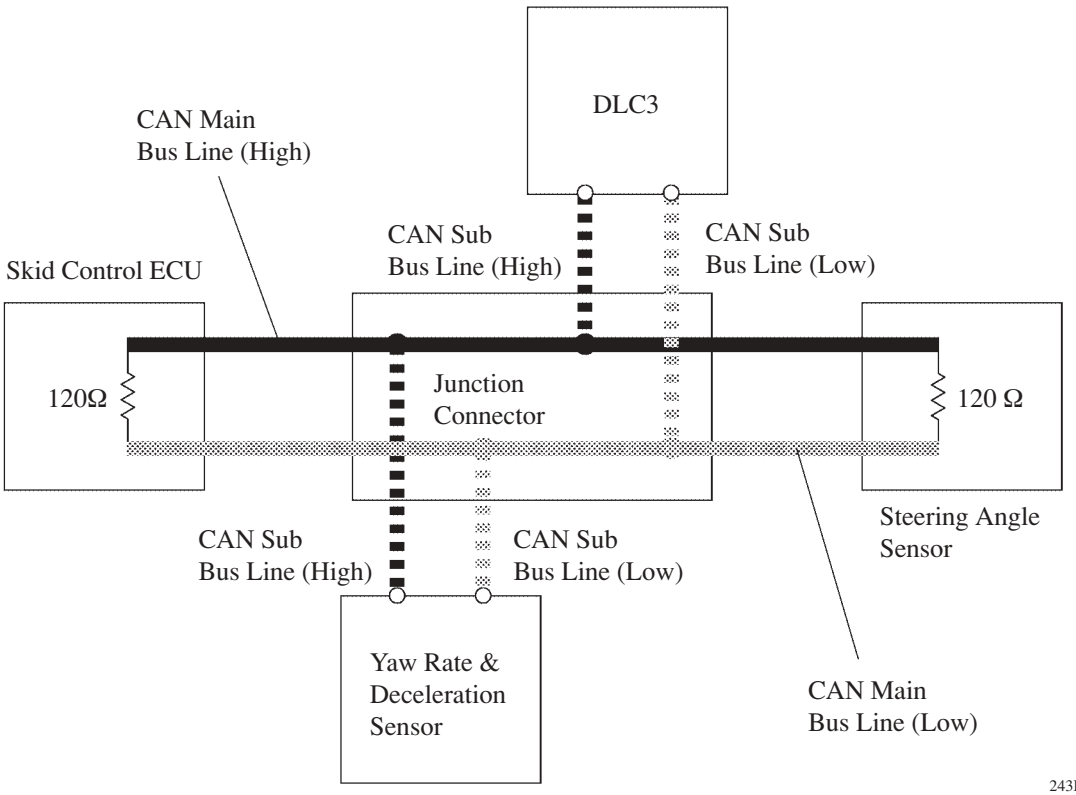

2. Layout of Main Components

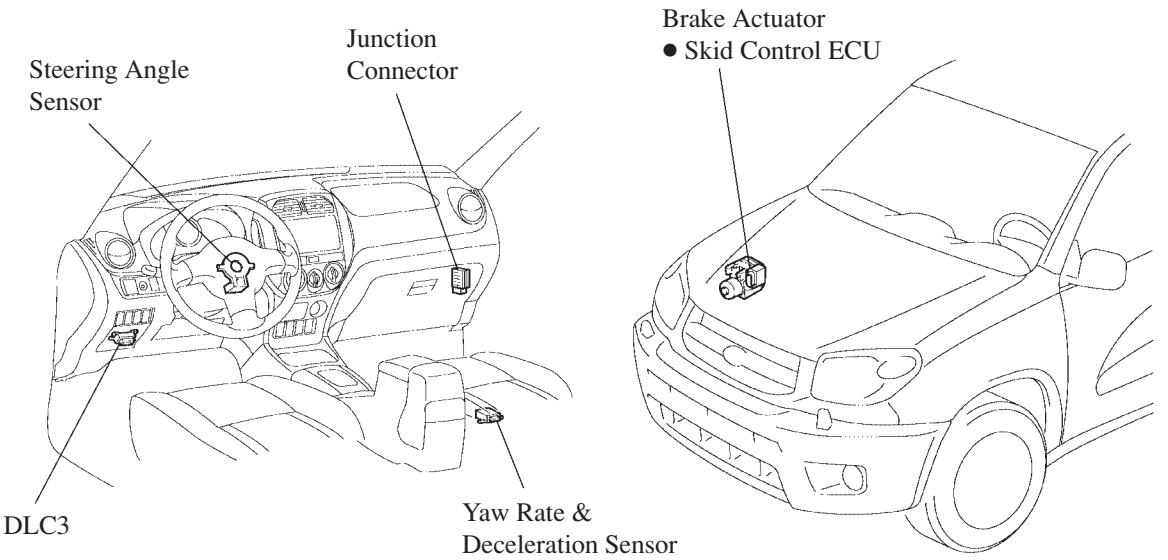

3. Diagnosis

- If the CAN has communication error at ECU or sensor, DTCs (Diagnostic Trouble Codes) are output simultaneously to indicate the malfunction location.
- The DTCs for CAN communication concerning the brake control system can be read by connecting the SST 09843-18040 to Tc and CG terminals of DLC3 connector, and observing the blinking of the ABS and VSC warning light (2-digit code) or by connecting a hand-held tester (5-digit code). For details, see the RAV4 Repair Manual Supplement (Pub. No. 1078E).

▶ DTC Combination Chart ◀

DTC Code Output (from VSC ECU)	Mode
U0073/94, U0123/62 U0124/95, U0126/63	Skid Control ECU communication stop mode
U0123/62, U0124/95	Yaw rate and deceleration sensor communication stop mode
U0126/63	Steering angle sensor communication stop mode

▶ DTC Chart ◀

DTC	Detection Item
U0073/94	Malfunction in CAN communication
U0123/62	Malfunction in CAN communication with yaw rate sensor
U0124/95	Malfunction in CAN communication with deceleration sensor
U0126/63	Malfunction in CAN communication with Steering angle sensor

- DLC3 is equipped with CAN-H and CAN-L terminals for CAN diagnosis. It is possible to determine if there is an open or short on the main bus line by measuring the resistance value between these terminals. It is possible to determine if there is a short between the bus line – power supply/ground by measuring the resistance value between terminal CAN-H or CAN-L, and the BAT or CG terminal.

▶ CAN-H – CAN-L Inspection ◀

Resistance Value	Bus line condition
54 Ω – 67 Ω	● Normal ● Sub bus line open (except DLC3 bus line, DTC output) ● Short between bus line – power supply/ground (Short in one area, DTC output)
more than 67 Ω	● Sub bus line open (only DLC3 bus line, No DTC output) ● Main bus line open
less than 54 Ω	● Short between bus line

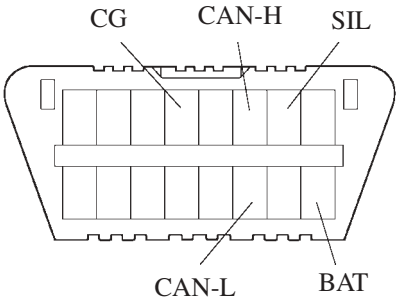

DLC3

241BE110

▶ Inspection for short between bus line – power supply/ground ◀

Inspection Item	Resistance Value	Bus line condition
● CAN-H – BAT ● CAN-L – BAT	more than 1MΩ	No bus line malfunction if no DTC output
	less than 1MΩ	Short between bus line – power supply/ground
● CAN-H – CG ● CAN-L – CG	more than 1kΩ	No bus line malfunction if no DTC output
	less than 1kΩ	Short between bus line – power supply/ground

- If a communication malfunction occurs between the skid control ECU and the steering angle sensor or the yaw rate & deceleration sensor, the skid control ECU stops control of the VSC (Vehicle Stability Control).
- For details of the CAN diagnosis system, see the RAV4 Repair Manual Supplement (Pub. No. RM1078E).

10

4. Fail-Safe

The fail-safe function provided for each system will operate if a failure occurs in the communication wire such as a short or an open circuit.

- On the new RAV4, the following fail-safe functions will operate if CAN communication is disabled.

Communication Error	Fail-Safe
Skid Control ECU, Yaw rate and Deceleration sensor and Steering angle sensor	● Stops VSC and ABS functions ● Illuminates VSC indicator light ● Detects DTCs

■MANUAL HEADILGHT BEAM LEVEL CONTROL SYSTEM

- A manual headlight beam level control system, which enables the driver to manually control the angle of the headlight beams, has been adopted on the model for Saudi Arabia.
- This system keeps the LO beam of the headlights adjusted to the appropriate level in accordance with the number (weight) of passengers and volume of luggage.
- When the driver operates the headlight beam level control switch, this system actuates the headlight leveling actuator that is integrated in the headlight unit, in order to change the headlight reflector angle.

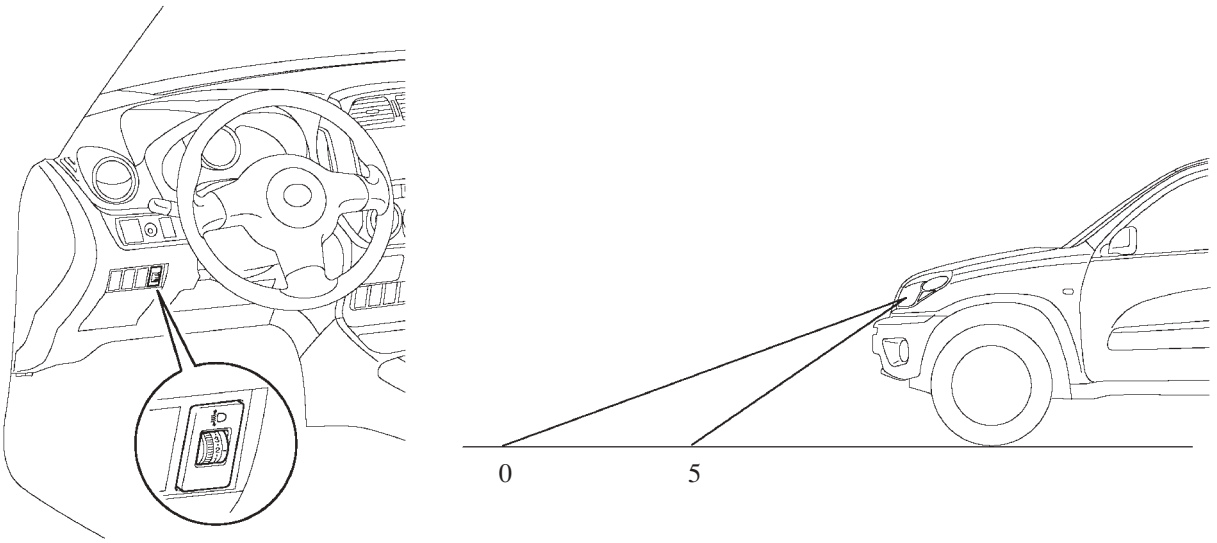

Headlight Beam Level Control Switch

258RV55

▶ Wiring Diagram ◀

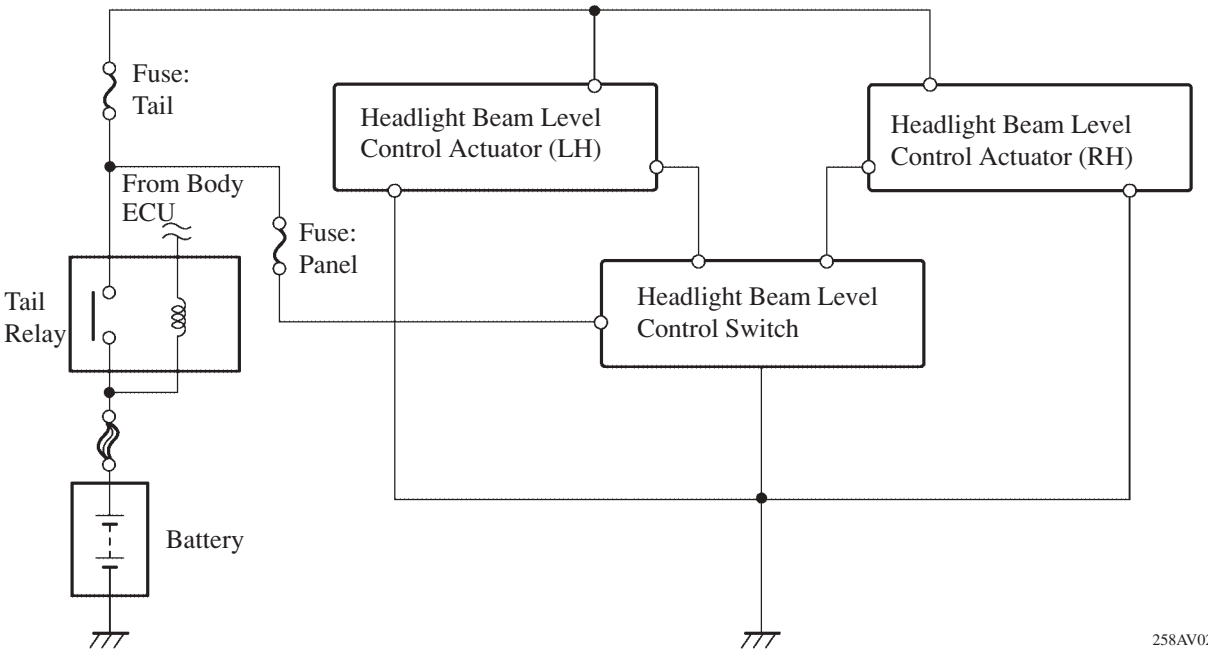

258AV02

■COMBINATION METER

1. General

- The ring shape has been changed on the speedometer gauge and on the tachometer on the cluster side. In addition, the ring has been changed to a silver paint.
- The color of the dial plates has been changed from cream to white.
- The movement for actuating the indicators in the meter has been changed from the cross coil type to a step-motor type. This has resulted in space-savings and weight reduction.

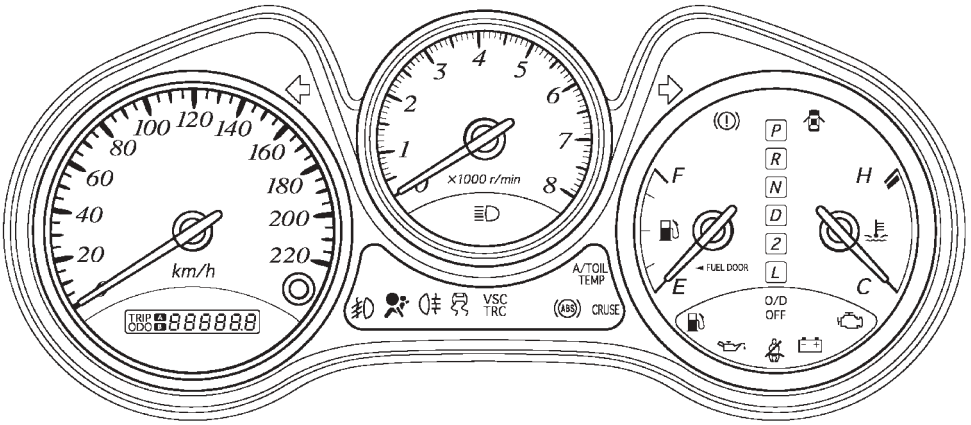

258RV56

2. Construction and Operation

- The indicator actuation movement for the speedometer and the tachometer has been changed from the cross coil type to step-motor type. This has resulted in a thinner indicator actuation movement, thus achieving a lightweight and compact construction.
- In the case of the step-motor type, when the power to combination meter is turned ON through the reconnection of the battery terminal, the step-motor initializes once to recognize the zero point of the indicator in relation to step-motor. However, if the ignition switch is turned ON after 60 seconds or more have elapsed after the initialization, the step-motor initializes again.

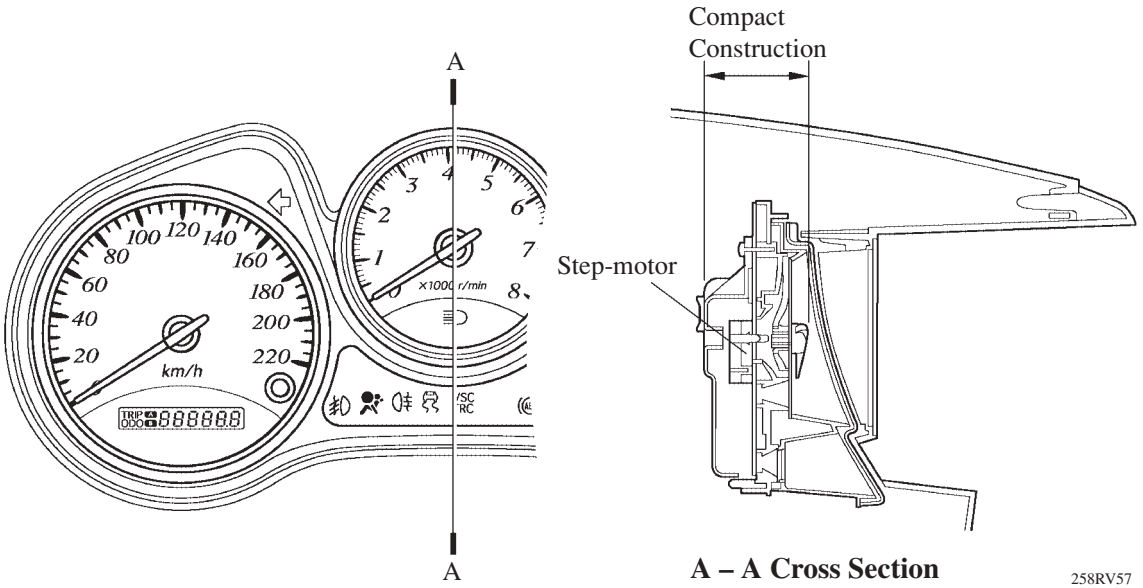

A – A Cross Section

258RV57

■ AIR CONDITIONER

1. General

- An automatic air conditioner has been newly adopted on the models for Europe in order to improve the comfort level.
- An LCD (Liquid Crystal Display) panel has been provided in order to display the set temperature, outside air temperature, and the blower level at the touch of a push button.
- The outside air temperature, which is displayed constantly whenever the blower is OFF, can be turned OFF by pressing the OUTSIDE TEMP switch.

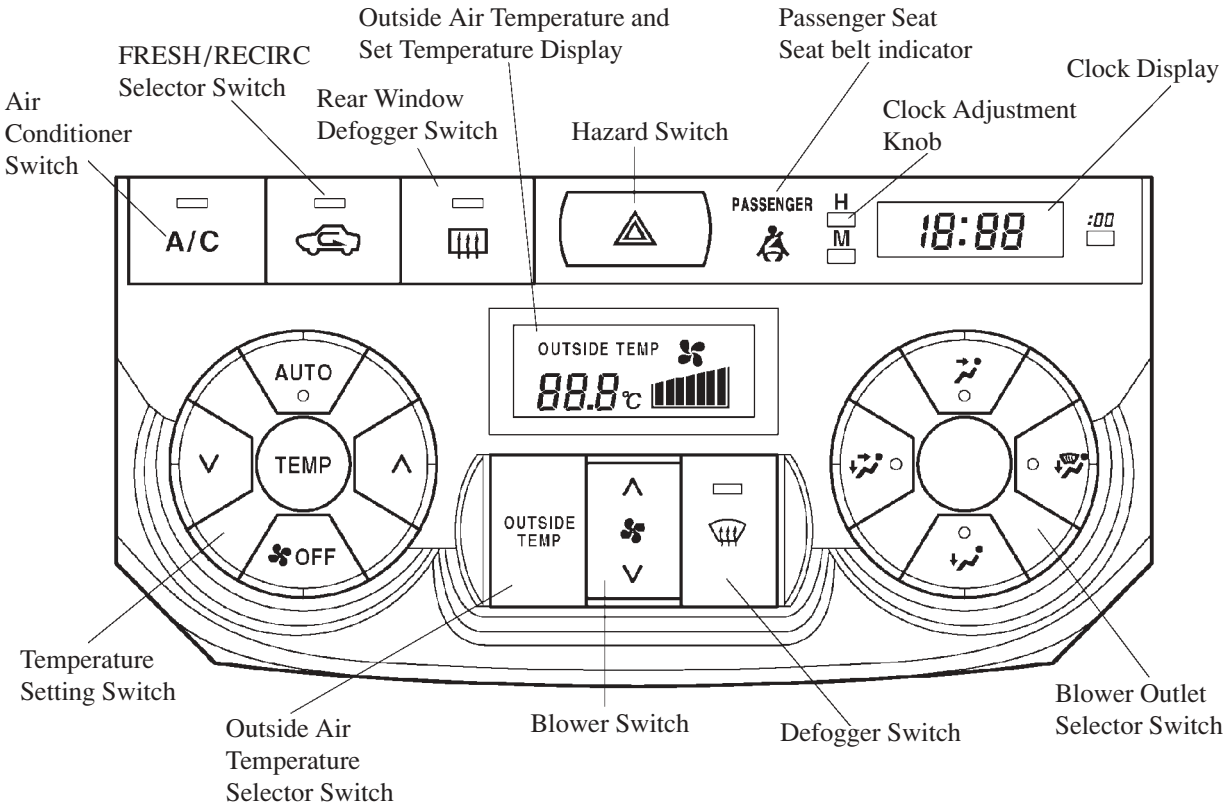

258RV15

2. System Diagram

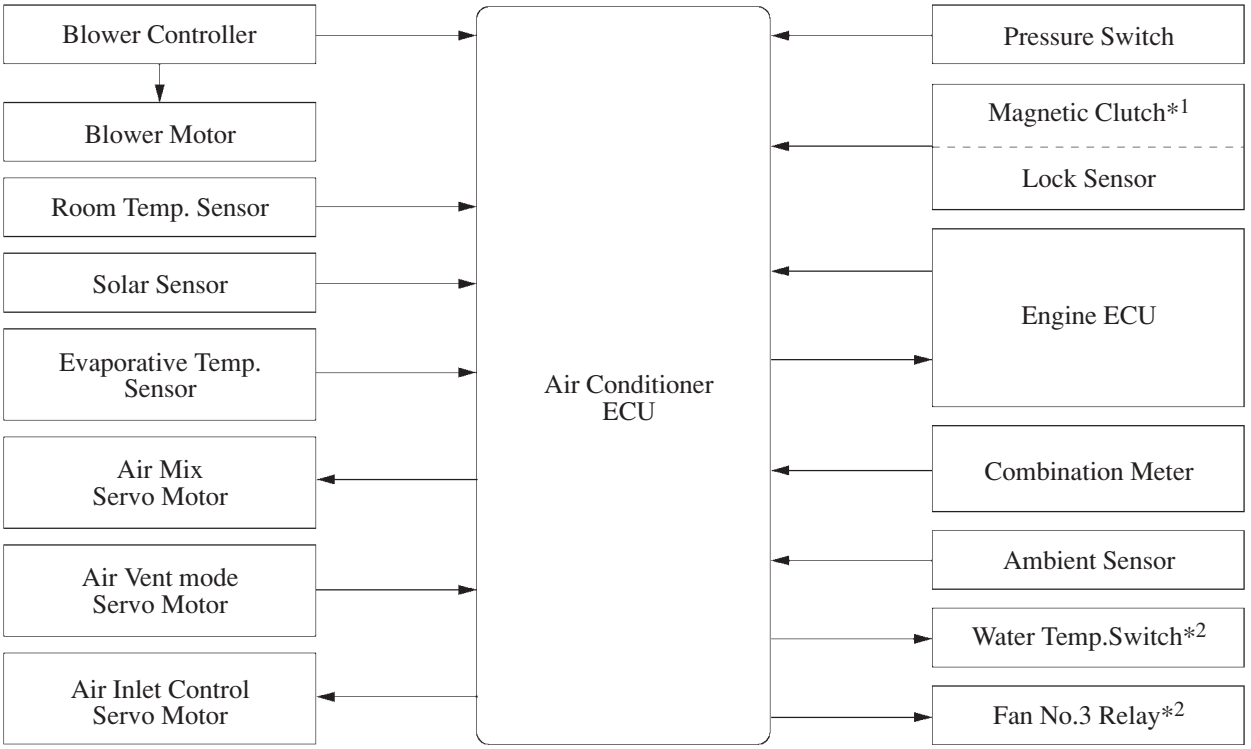

*1: For the gasoline engine model, controlled at the engine ECU.
For the diesel engine model, controlled at the air conditioner ECU.
*2: Only for Diesel Engine Model.

Automatic Air Conditioner System Model

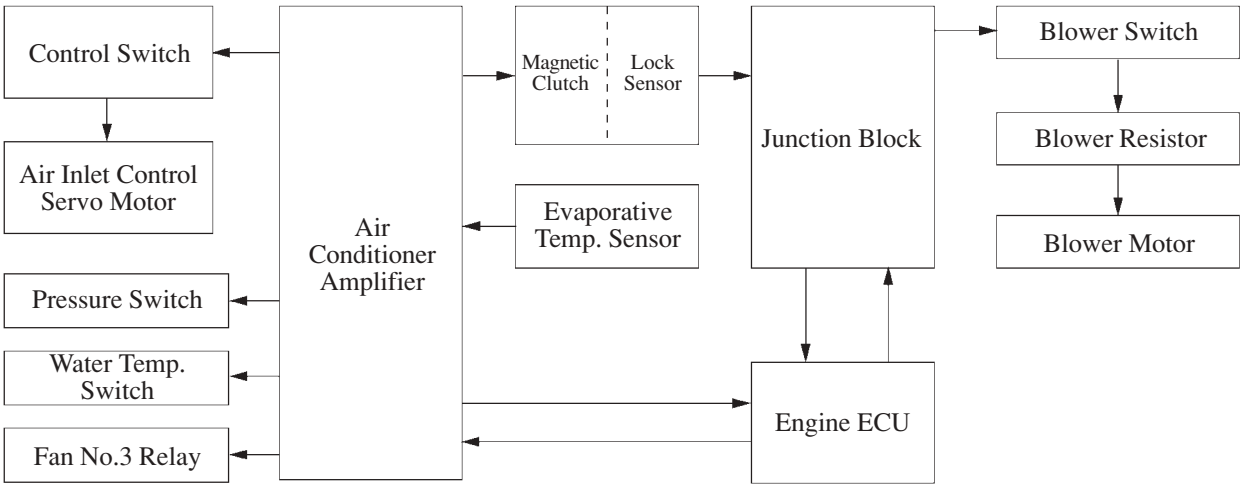

Manual Air Conditioner System Model

258RV58

3. Layout of Main Components

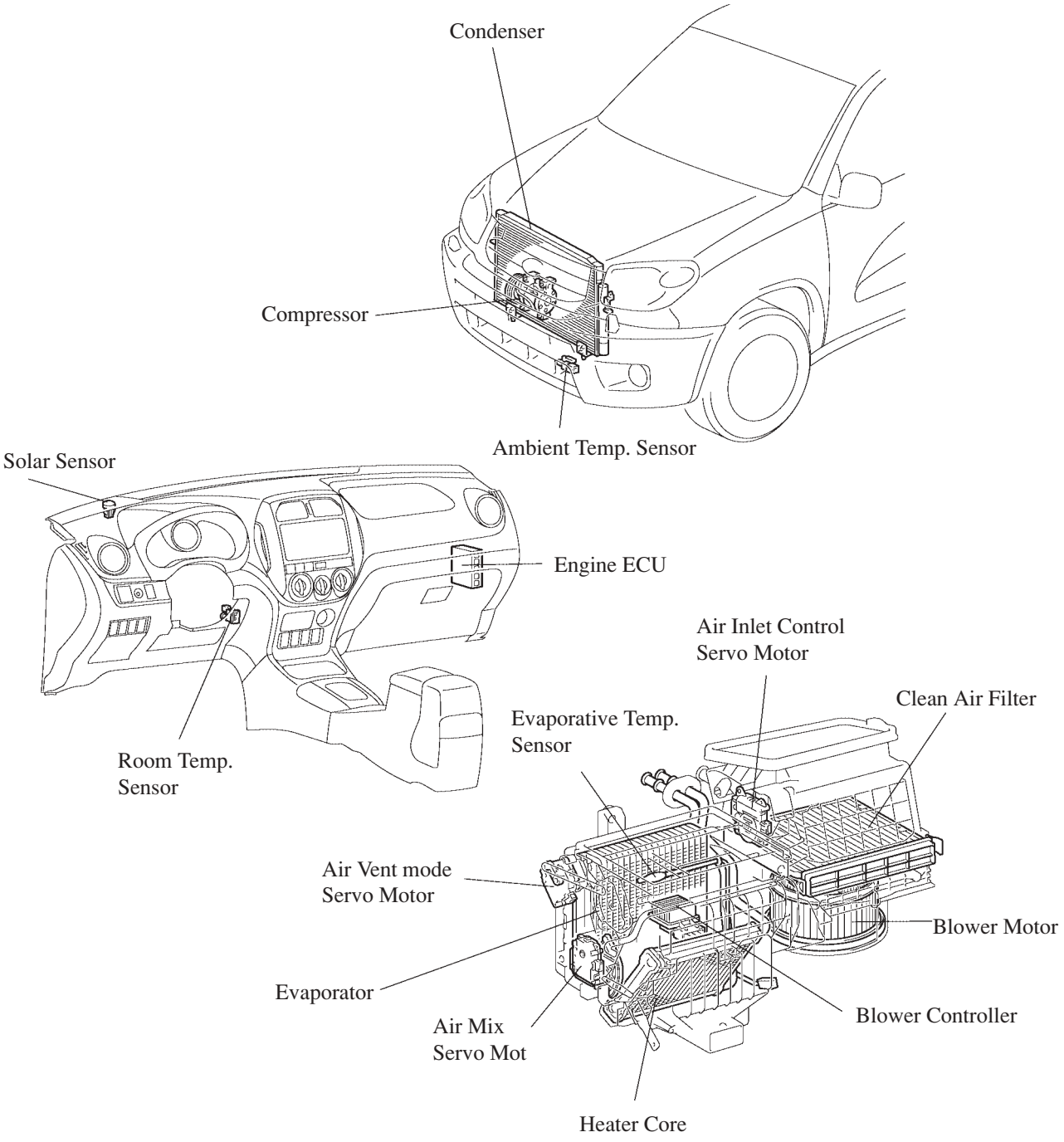

4. Model Position and Damper Operation

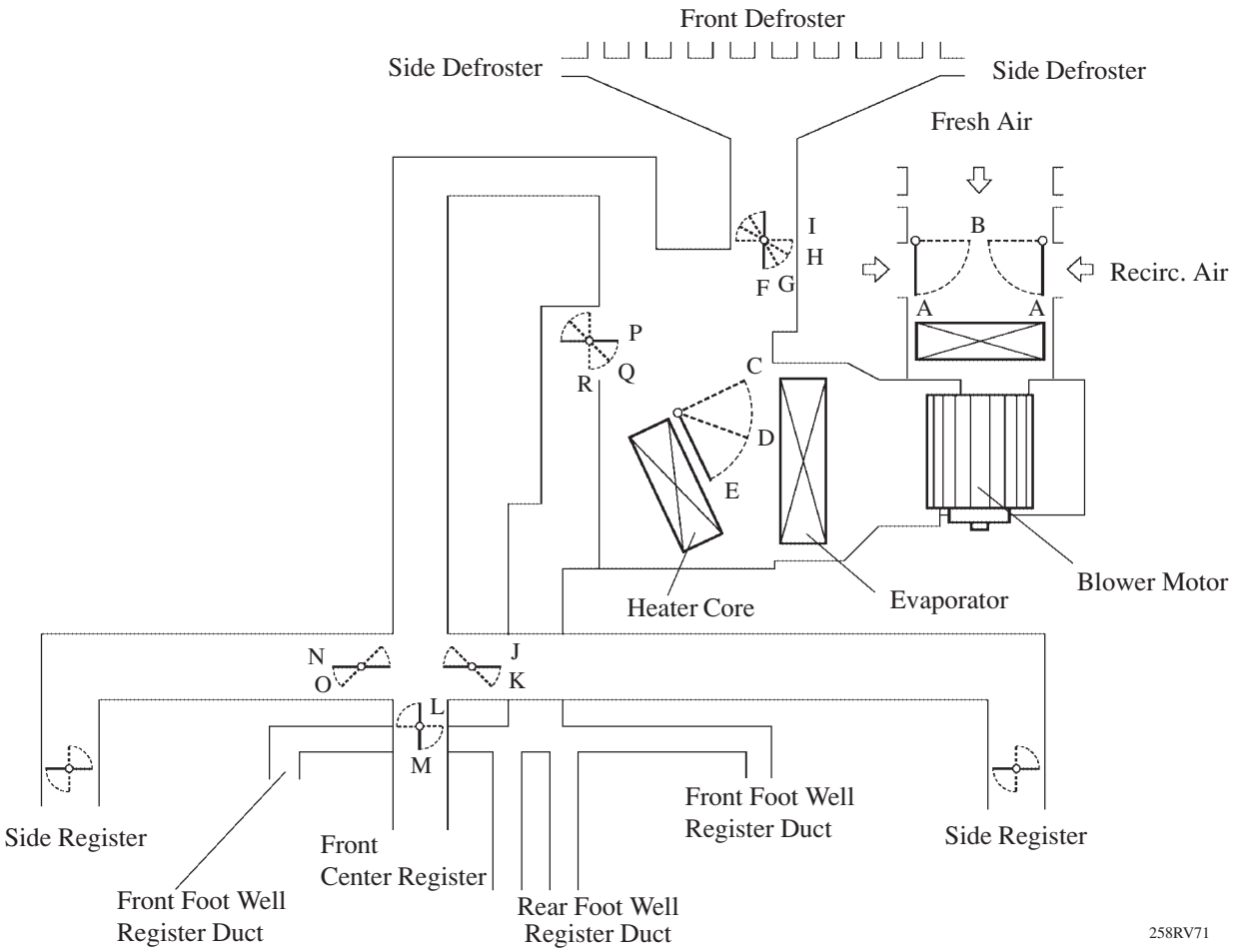

▶ Function of Main Damper ◀

Control Damper	Control Position	Damper Position	Operation
Air Inlet Control Damper	FRESH 187BE23	A	Brings in fresh air.
	RECIRC 187BE41	B	Recirculates internal air.
Air Mix Control Damper	MAX COLD – MAX HOT TEMP. SETTING {16°C (60.8°F) – 30°C (86°F)}	C, D, E	Varies the mixture ratio of the cool air and the warm air in order to regulate the temperature continuously from HOT to COLD.
Mode Control Damper	DEF 187BE28	F, K, L, O, S	Defrosts the windshield through the front defroster and side register.
	FOOT/DEF 187BE27	G, K, L, O, Q	Defrosts the windshield through the front defroster, side register and while air is also blown out from the front and rear foot well register ducts.
	FOOT 187BE26	H, K, L, O, P (I, K, L, O, P)	Air blows out of the footwell outlet and the side registers; also, a small amount of air blows out of the defroster.
	BI-LEVEL 187BE25	I, J, M, N, P	Air blows out of the front and rear center registers, side registers, and front and rear foot well register ducts.
	FACE 187BE24	I, J, M, N, R	Air blows out of the front and side registers, and side register.

10

5. Construction and Operation

Solar Sensor

- Detects (in the form of changes in the current that flows through the built-in photo diode) the changes in the amount of sunlight at the driver and front passenger sides (2 direction) and outputs them to the air conditioner ECU.
- This sensor is located in the driver side above the instrument panel.

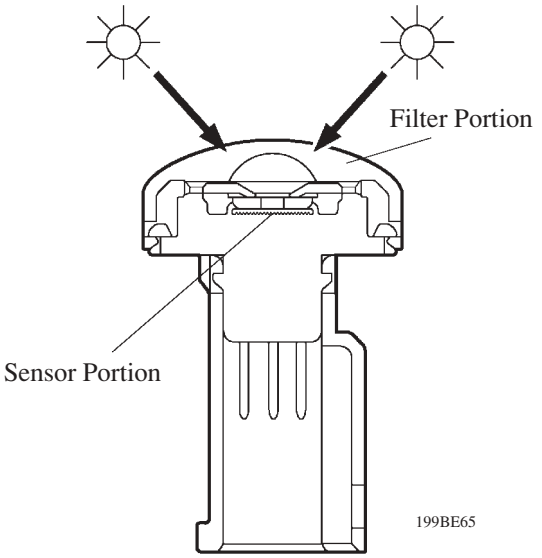

Air Conditioner ECU

The air conditioner ECU has following control.

Control	Outline	Automatic	Manual
Outlet Air Temp. Control	In response to the temperature control switch setting, the required outlet air temperature, evaporator temperature sensor, and engine coolant temperature sensor compensations are used by the air mix control damper control to calculate a tentative damper opening angle, through an arithmetic circuit in the air mix damper, to arrive at a target damper opening angle.	○	—
Blower Control	Controls the operation of the blower motor in accordance with the signals from the engine coolant temperature sensor, evaporator temperature sensor, and the solar sensor.	○	—
Air Outlet Control	When the AUTO switch has been turned ON, automatic control causes the servomotor (for air mix control) to rotate to a desired position in accordance with the target damper opening, which is based on the calculation of the required outlet air temperature.	○	—
	In accordance with the engine coolant temperature, outside air temperature, amount of sunlight, required blower outlet temperature, and vehicle speed conditions, this control automatically switches the blower outlet to the FOOT/DEF mode to prevent the window from becoming fogged when the outside air temperature is low.	○	—
Air Inlet Control	Automatically controls the air inlet control damper in accordance with the calculation of the required outlet air temperature.	○	○
	Drives the servomotor (for air inlet) according to the operation of the air inlet control switch and fixes the dampers in the FRESH or RECIRC position.	○	—
Compressor Control	Turns OFF the magnetic clutch of the compressor when the blower motor is turned OFF at the time the engine coolant temperature is below a predetermined value, an abnormal refrigerant pressure has been input, or the discharge temperature of the evaporator is below a predetermined value.	○	○

(Continued)

Control	Outline	Automatic	Manual
Rear Window Defogger Control	Switches the rear defogger, outside rear view mirror heaters and front wiper deicer, on for 15 minutes when the rear defogger switch is switched on. Switches them off if the switch is pressed while they are operating.	○	○
Self-Diagnosis	Checks the sensor in accordance with operation of the air conditioner switches, then heater control panel display portion a DTC (Diagnosis Trouble Code) to indicate if there is a malfunction or not (sensor check function).	○	—
	Drives the actuators through a predetermined sequence in accordance with the operation of the air conditioner switches (actuator check function).	○	—

6. Self-Diagnosis

- The air conditioner ECU has a self-diagnosis function. It stores any operation failures in the air conditioner system memory in the form of a malfunction code. By operating the air conditioner control switches, the stored malfunction codes will be indicated. Since diagnostic results are stored directly by electric power from the battery, they are not cleared even when the ignition switch is turned off.

▶ Functions ◀

Function	Outline
Indicator Check	Checks mode and temperature setting display.
Sensor Check	Checks the past and present malfunctions of the sensors, and clearing the past malfunction data.
Actuator Check	Checks against actuator check pattern if blower motor, servomotors and magnetic clutch are operating correctly according to signals from ECU.

- The check function can be started by the following procedure shown below.

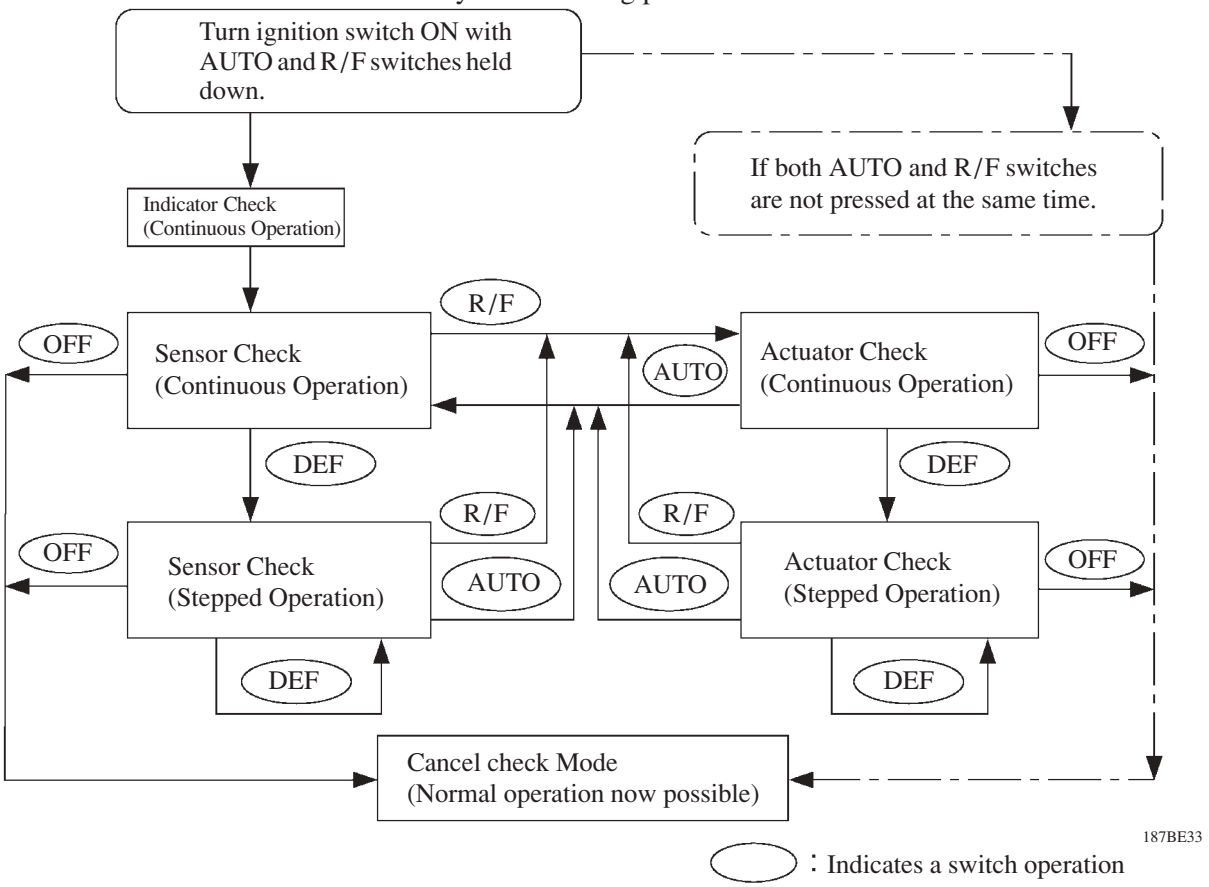

- For details on the indicator check, sensor check, actuator check function, and clearing DTC of this system, refer to the RAV4 Repair Manual Supplement (Pub. No. RM1078E).

10

■SRS AIRBAG SYSTEM

1. General

- The dual-stage SRS (Supplemental Restraint System) airbag system, that makes the airbag inflating output optimum depend on the extent of impact , seat position and whether or not the seat belt is fastened, has been adopted to the driver and front passenger* seat for Europe models as a standard equipment.
- In accordance with the adoption of the dual-stage SRS airbags system, a seat position sensor has been established for the driver seat for Europe models.
- The no-contact type seat belt buckle switch has been adopted to the driver seat for Europe models.
- The SRS side airbags, that help reduce injuries mainly to the driver's or front passenger's chest in the event of a side collision, and the curtain shield airbags, that help reduce the impact applied to the front and rear seat occupants with a single curtain shield airbag, have been adopted as a optional equipment.
- An active circuit is used in the SRS warning light circuit in order to illuminate the light when there is an open or short circuit in the wiring harness.

*: The front passenger seat only controls the airbag inflating output optimum depend on the extent of impact.

▶ Wiring Diagram ◀

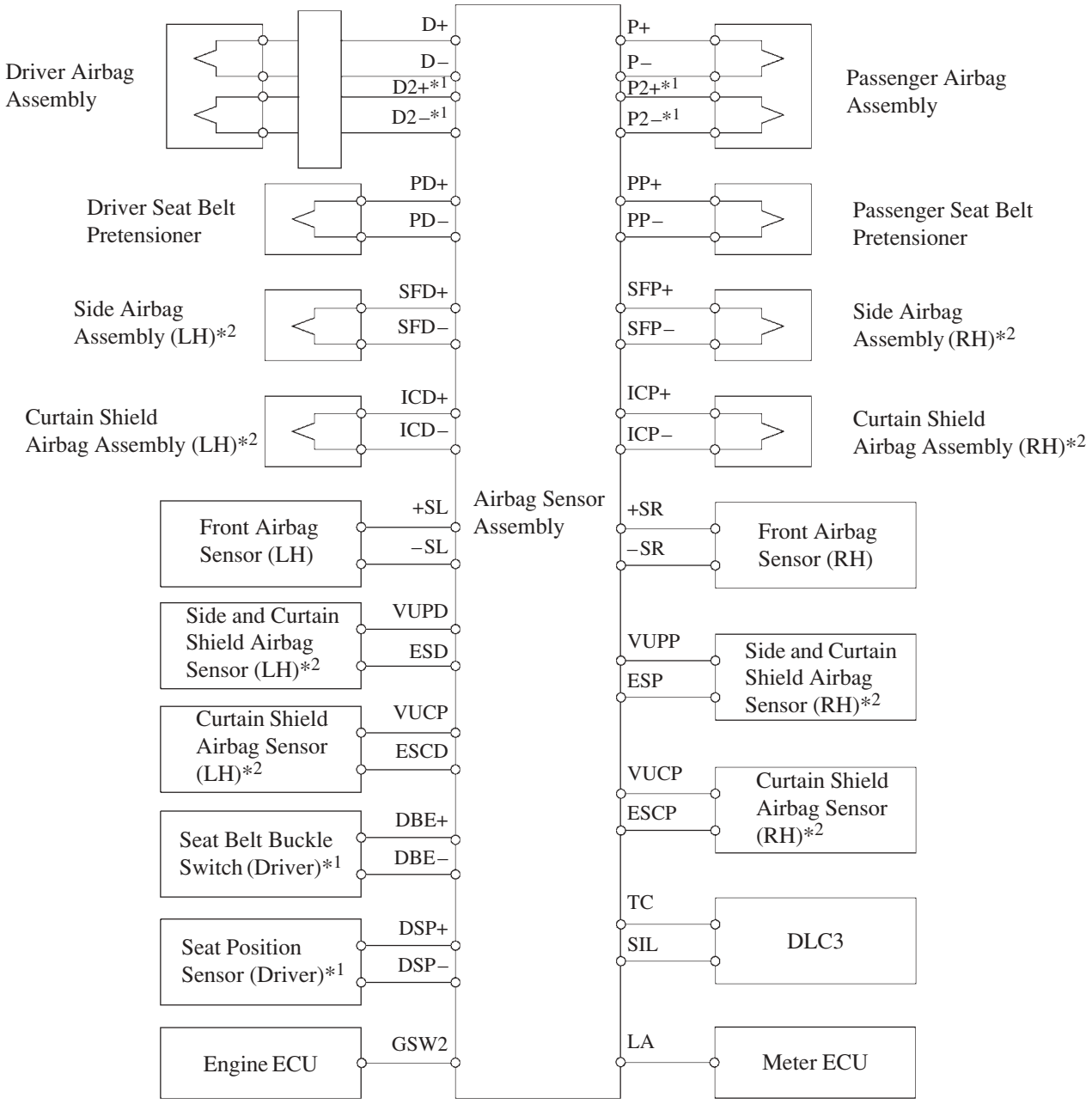

258RV81

*1: Only for Europe Models
*2: Models with Side and Curtain Shield Airbag Only

2. Layout of Main Components

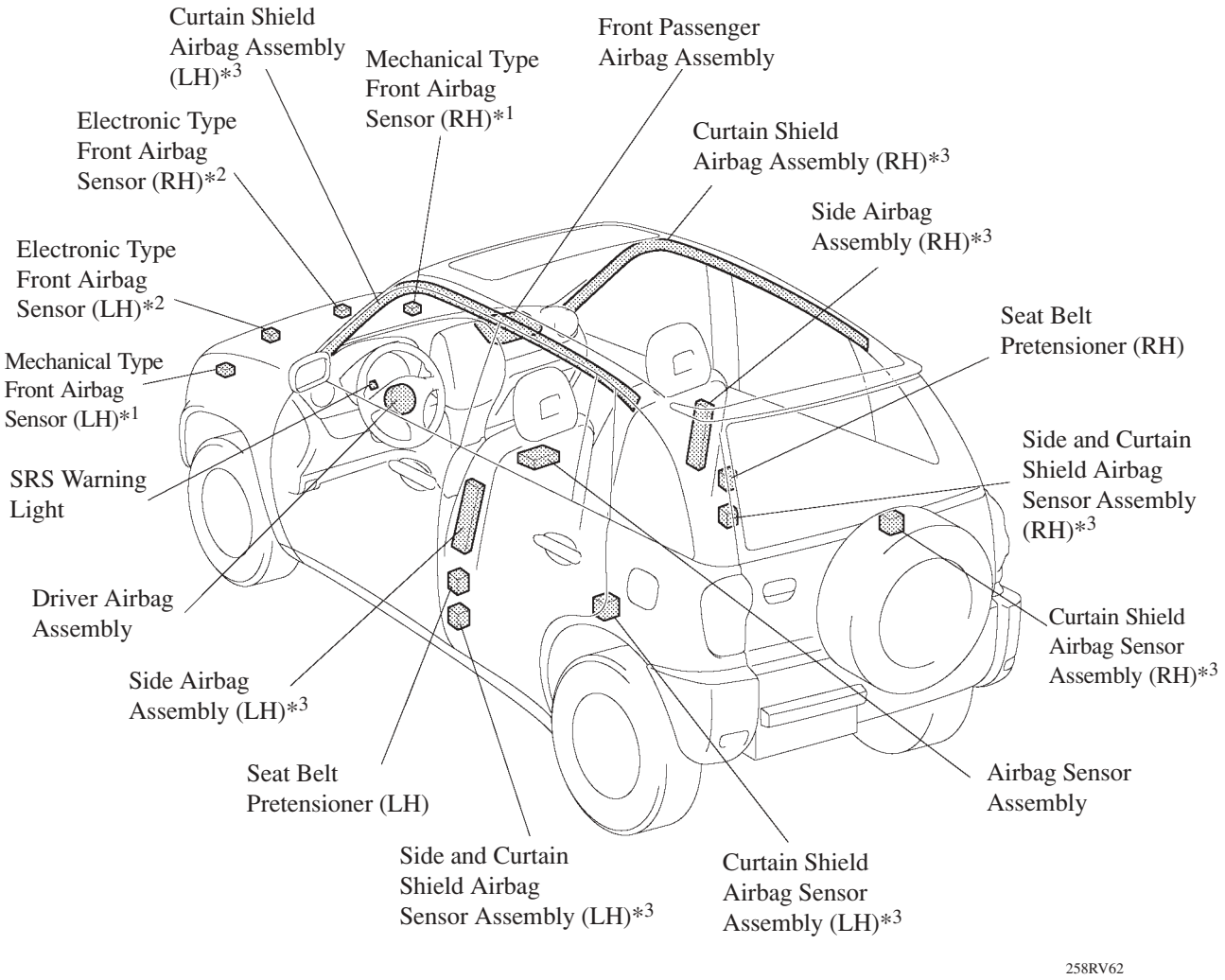

*1: Only for General Countries Models
*2: Only for Europe Models
*3: Models with Side and Curtain Shield Airbag Only

3. Airbag for Front Collision

General

- In conjunction with impact absorbing structure for front collision, the driver and front passenger dual-stage SRS airbags have been designed to help reduce injury to the head and chest in the event of a front collision. These airbags all deploy with the same timing, and are supplements to the seat belts.
- The deceleration sensor is enclosed in the front airbag sensor. Based on the deceleration of the vehicle during a front collision, a distortion is created in the sensor and converted into an electrical signal. Accordingly, the extent of the initial collision can be detected in detail.

▶ Front Airbag Operation ◀

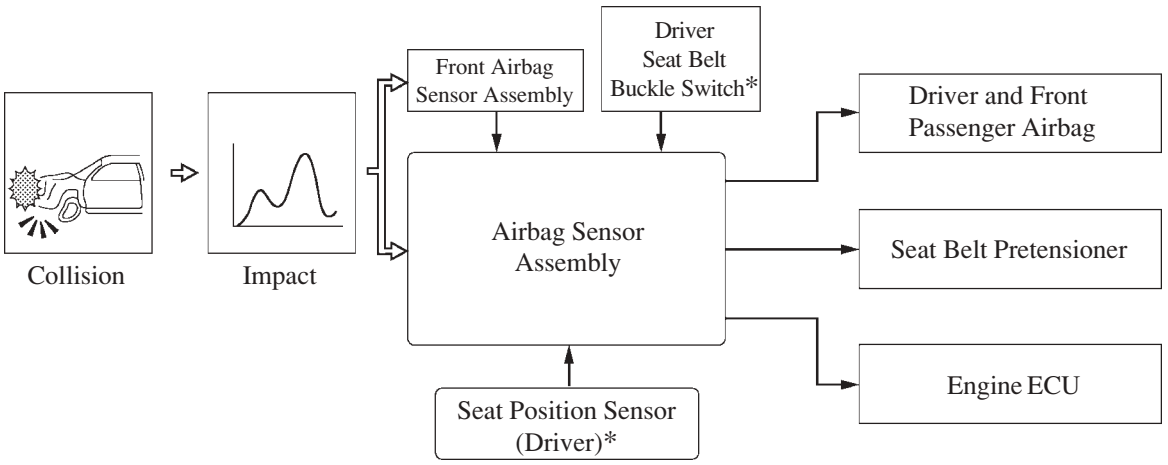

*: Only for Europe Models

231LX12

Dual-stage SRS Airbags System (Europe Models Only)

In this system, when the front airbag sensors and airbag sensor assembly detect the front collision, the airbag sensor assembly judges the extent of impact, seat position and whether or not the seat belt is fasten, thus making the airbag inflating output optimum by delaying the inflating timing of the 2nd initiator and the 1st initiator.

Seat Position Sensor (Europe Models Only)

- The seat position sensor, which is attached to the seat rail of the driver seat, detects the sliding position of the seat. In addition, the shielding plate to make the seat position sensor judge the seat position is installed on this seat rail.
- The seat position sensor use a Hall IC for its sensor and has magnet portion on its opposite side.
- The seat position detection by the seat position sensor judges that the seat position is rearward if the shielding plate is between the sensor and the seat position is forward if the shielding plate is not between the sensor.

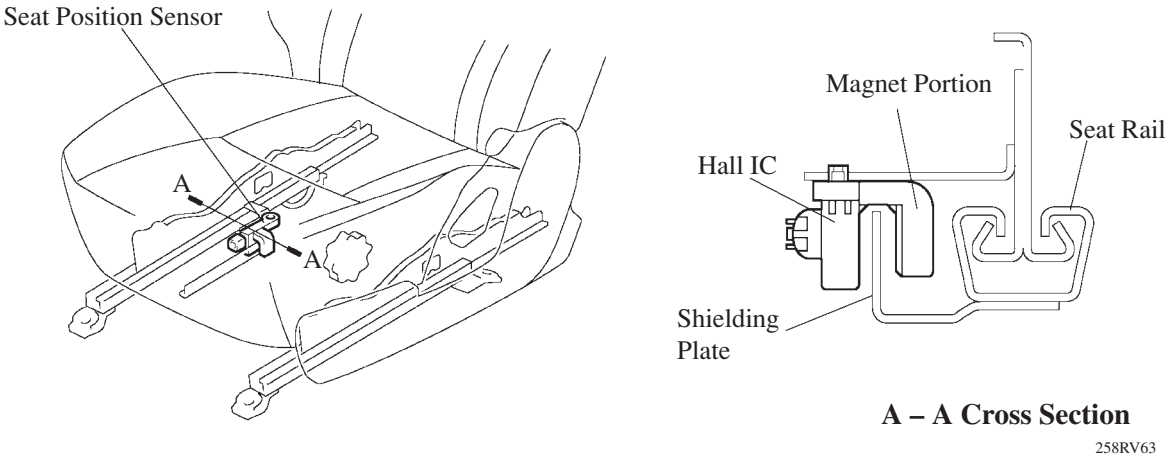

Seat Belt Buckle Switch (Europe Models Only)

- The no-contact type seat belt buckle switch using a Hall IC which outputs a signal to the dual-stage airbag and the airbag sensor has been adopted in the driver's seat on Europe model (except for Hong Kong, Singapore, Thailand, and Colombia).
- The seat belt buckle switch comprises a Hall IC and 2 magnets, installed into the front seat inner belt assembly.
- The ejector inside the front seat inner belt assembly and the plate installed to the ejector move when the seat belt is removed or applied. The movement of the plate cuts off the magnetic flux density of the seat belt buckle switch magnet. The Hall IC detects the changes in the magnetic flux density as seat belt removal or application, and outputs the signal to the airbag sensor.

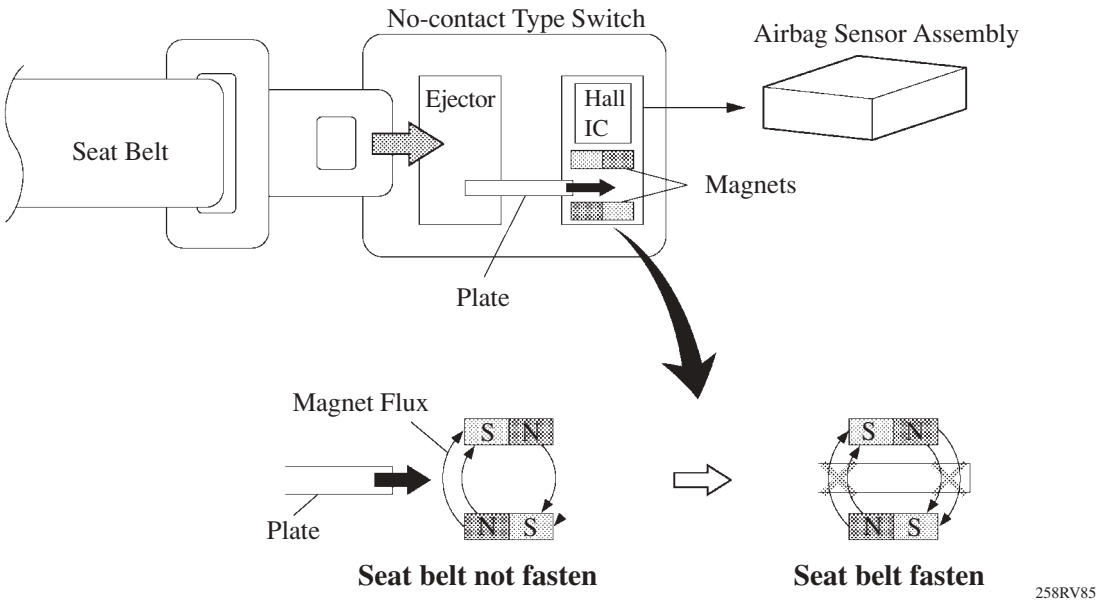

4. Airbags for Side Collision

General

In conjunction with impact absorbing structure for side collision, the SRS side and curtain shield airbags have been designed to help reduce the impact energy that is transmitted to the driver, front passenger and rear outer passenger in the event of a side collision.

Side Airbag

A front side collision is detected by the side airbag sensor in order to simultaneously deploy the side and curtain shield airbags.

▶ Side and Curtain Shield Airbag Operation ◀

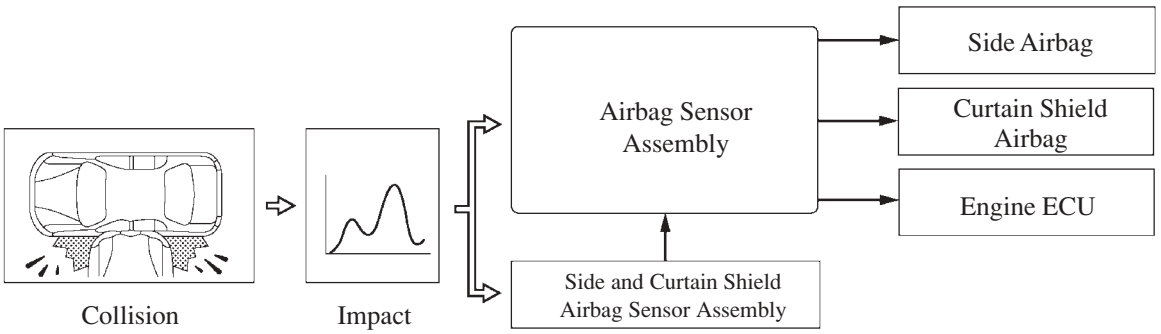

Curtain Shield Airbag

- A rear side collision is detected by the curtain shield airbag sensor in order to deploy only the curtain shield airbag.
- New RAV4 has adopted a large bag to cover the door glass at the front and rear when the bag deploys. This helps reducing the possibility of injuries to occupants during a side collision.

▶ Curtain Shield Airbag Operation ◀

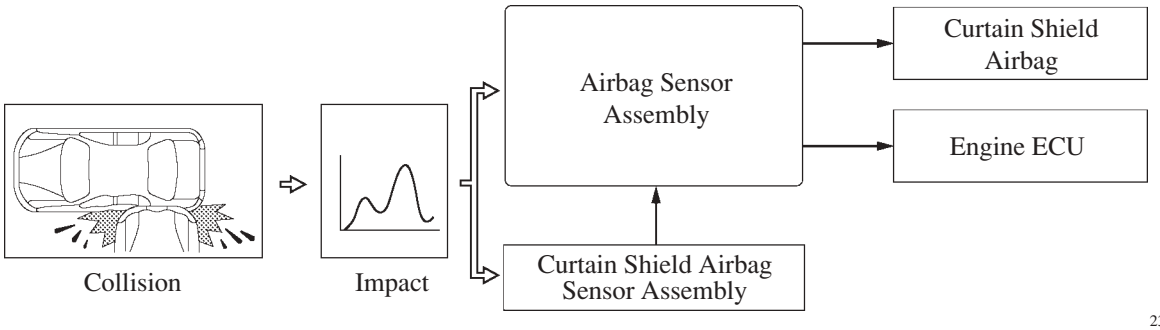

10

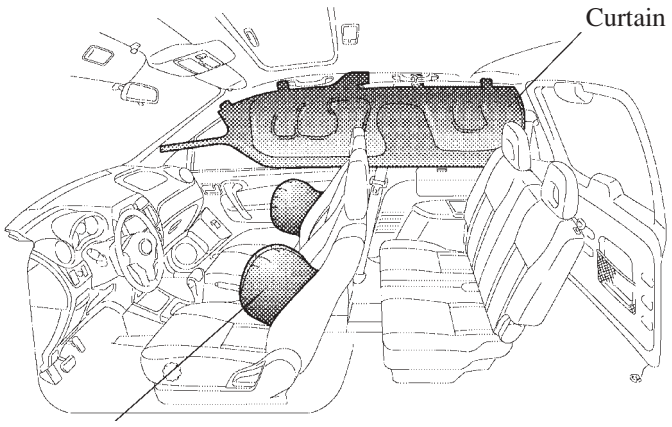

3-Door Model

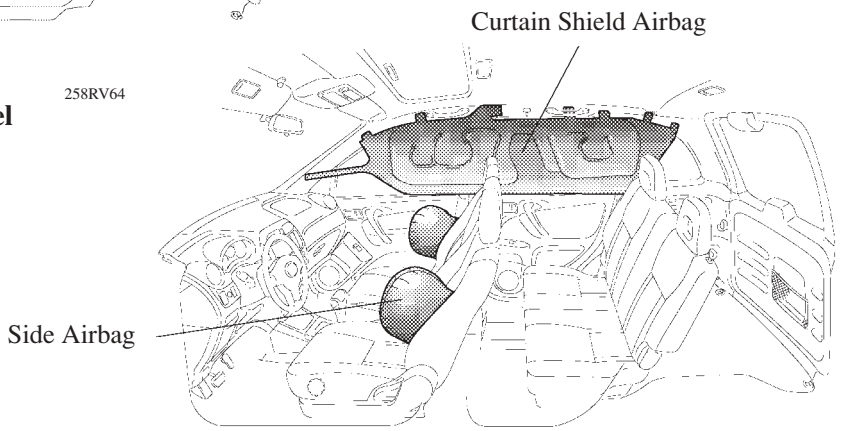

5-Door Model

5. Self-Diagnosis Function

- If the airbag sensor assembly detects a malfunction in the SRS airbag system, it stores the malfunction data in memory, in addition to illuminating the SRS warning light. Then, the DTCs (Diagnostic Trouble Codes) can be accessed by connecting a hand-held tester to the DLC3 terminal or the SST (09843-18040) to the Tc and CG terminals of the DLC3 and reading the blinking of the SRS warning light. For details, see the RAV4 Repair Manual Supplement (Pub. No. EM1078E).
- If the SRS Airbag deploys, the airbag sensor assembly will turn on the SRS airbag warning light. However, different from the ordinary diagnosis function, a DTC will not be memorized. The airbag warning light can be turned off only by changing the airbag sensor assembly to a new one.
- When a malfunction is detected in the SRS airbag system, the following DTCs will be output:

▶ Diagnostic Trouble Code Chart ◀

DTC No.		Detection Item	DTC No.		Detection Item
2-digit	5-digit		2-digit	5-digit	
Normal		Power source Voltage drop	22	B1625	Side airbag sensor assy RH circuit malfunction
11	B1600	Front airbag sensor RH circuit malfunction	23	B1630	Airbag sensor rear LH circuit malfunction
12	B1605	Front airbag sensor LH circuit malfunction	24	B1635	Airbag sensor rear RH circuit malfunction
13	B1610	Front airbag sensor RH circuit malfunction	31	B1000	Airbag sensor assy center malfunction
14	B1615	Front airbag sensor LH circuit malfunction	35	B1653	Seat position airbag sensor circuit malfunction
21	B1620	Side airbag sensor assy LH circuit malfunction	37	B1655	Seat belt buckle switch LH circuit malfunction

(Continued)

DTC No.		Detection Item	DTC No.		Detection Item
2-digit	5-digit		2-digit	5-digit	
51	B1800	Short in D squib circuit	56	B1825	Short in side squib RH circuit
	B1801	Open D squib circuit		B1826	Open in side squib RH circuit
	B1802	Short in D squib circuit (to ground)		B1827	Short in side squib RH circuit (to ground)
	B1803	Short in D squib circuit (to B+)		B1828	Short in side squib RH circuit (to B+)
52	B1805	Short in P squib circuit	57	B1830	Short in curtain shield squib LH circuit
	B1806	Open in P squib circuit		B1831	Open in curtain shield squib LH circuit
	B1807	Short in P squib circuit (to Ground)		B1832	Short in curtain shield squib LH circuit (to ground)
	B1808	Short in P squib circuit (to B+)		B1833	Short in curtain shield squib LH circuit (to B+)
53	B1810	Short in D squib (2nd step) circuit	58	B1835	Short in curtain shield squib RH circuit
	B1811	Open in D squib (2nd step) circuit		B1836	Open in curtain shield squib RH circuit
	B1812	Short in D squib (2nd step) circuit (to ground)		B1837	Short in curtain shield squib RH circuit (to ground)
	B1813	Short in D squib (2nd step) circuit (to B+)		B1838	Short in curtain shield squib RH circuit (to B+)
54	B1815	Short in P squib (2nd step) circuit	73	B1900	Short in P/T squib LH circuit
	B1816	Open in P squib (2nd step) circuit		B1901	Open in P/T squib LH circuit
	B1817	Short in P squib (2nd step) circuit (to ground)		B1902	Short in P/T squib LH circuit (to ground)
	B1818	Short in P squib (2nd step) circuit (to B+)		B1903	Short in P/T squib LH circuit (to B+)
55	B1820	Short in side squib LH circuit	74	B1905	Short in P/T squib RH circuit
	B1821	Open in side squib LH circuit		B1906	Open in P/T squib RH circuit
	B1822	Short in side squib LH circuit (to ground)		B1907	Short in P/T squib RH circuit (to ground)
	B1823	Short in side squib LH circuit (to B+)		B1908	Short in P/T squib RH circuit (to B+)

Service Tip

DTC Clearance (Not using hand-held tester)

The DTCs are cleared by opening and shorting the Tc and CG (or ground) terminals of the DLC3 in accordance with the timing chart shown below.

1) Using SST (09843-18040), connect terminal Tc and CG terminals of the DLC3.
2) Disconnect terminal Tc of DLC3 within 10 seconds after the DTCs appear, and check if the SRS warning light come on within 3 seconds.
3) Within 2 to 4 seconds after the SRS warning light comes on, reconnect the Tc and CG terminals of the DLC3.
4) SRS warning light goes off 3 seconds after reconnecting the Tc and CG terminals of the DLC3. Then disconnect the terminal Tc of the DLC3 within 2 to 4 seconds after the SRS warning light goes off.
5) Warning light comes on within 3 seconds after re-disconnecting the Tc and CG terminals of the DLC3.
6) Within 2 to 4 seconds after the SRS warning light comes on, reconnect the Tc and CG terminals of the DLC3.
7) SRS warning light goes off 3 seconds after reconnecting the Tc and CG terminals of the DLC3.
8) Normal codes appears 1 seconds after the SRS warning light goes off.

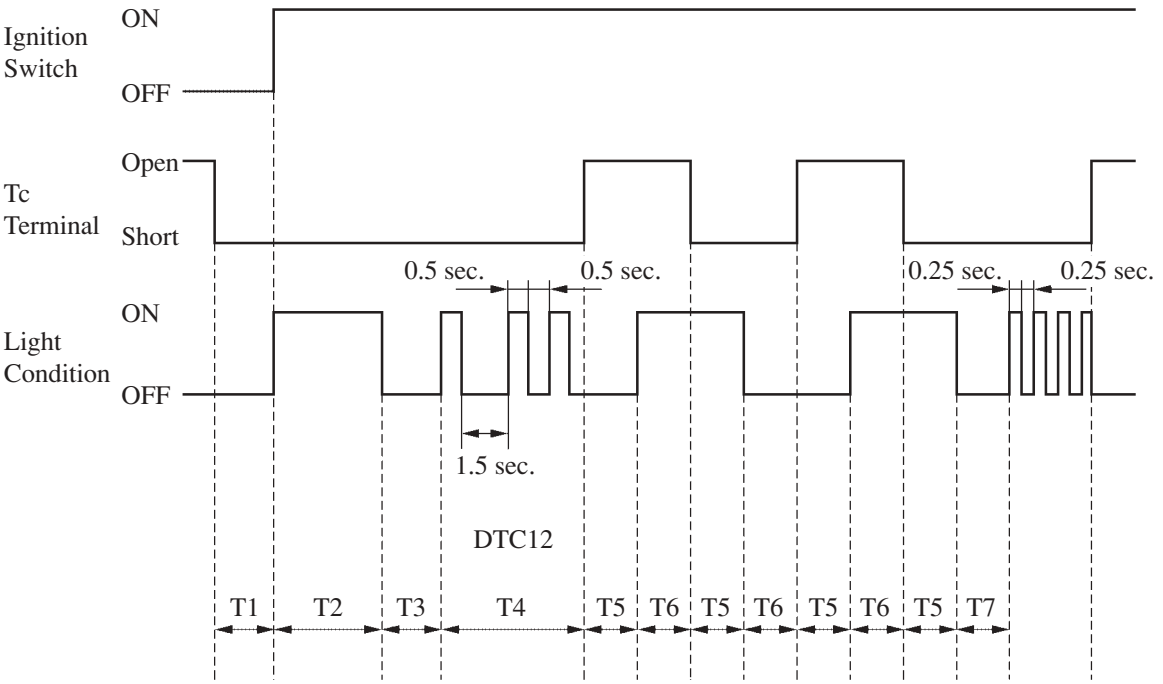

237BE34

T1: 0 – ∞ second
T2: Approx. 6 seconds
T3: 3 – 5 seconds
T4: 3 – 10 seconds
T5: 2 – 4 seconds
T6: 1 – 5 seconds
T7: within 1 second

Active Circuit

An active circuit is used in the SRS warning light circuit in order to illuminate the light when there is an open or short circuit in the wiring harness. Thus, the malfunction detection area has been changed.

▶ Circuit Diagram ◀

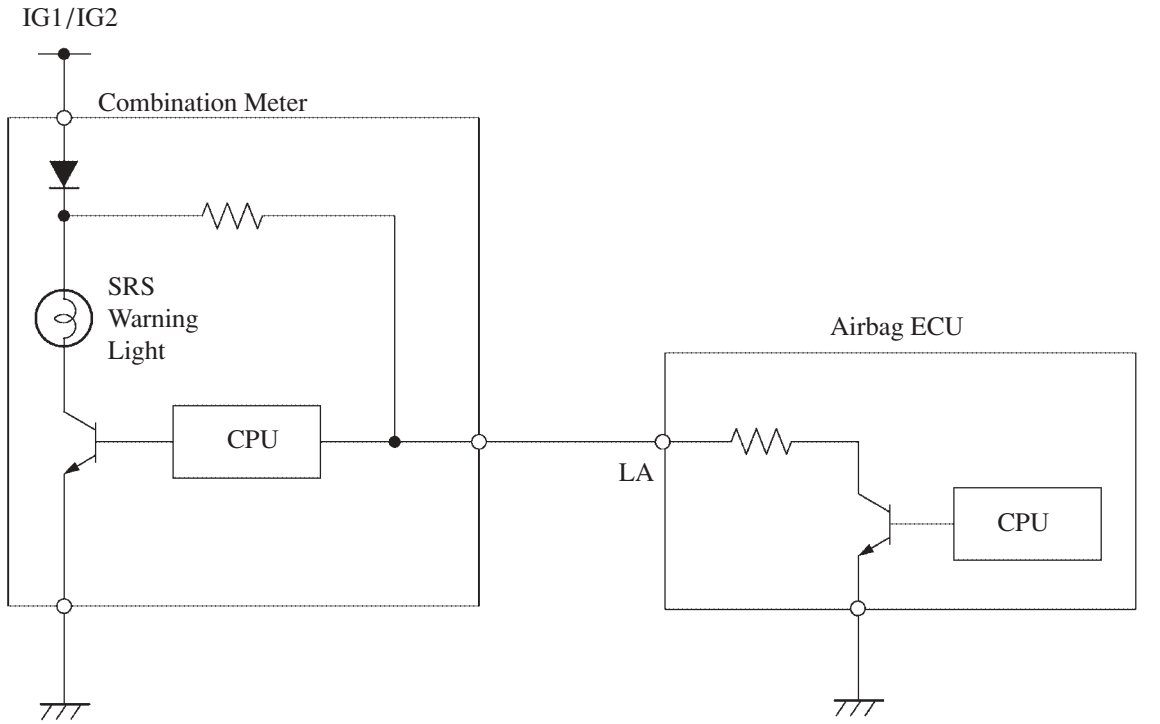

258RV82

■CRUISE CONTROL SYSTEM

1. General

- Along with the adoption of the ETCS-i (Electronic Throttle Control System-intelligent) in the 1AZ-FE and 2AZ-FE engine, the cruise control system has been changed from the conventional actuator control to electronic throttle control.
- The cruise control ECU has been integrated in the engine ECU.

▶ System Diagram ◀

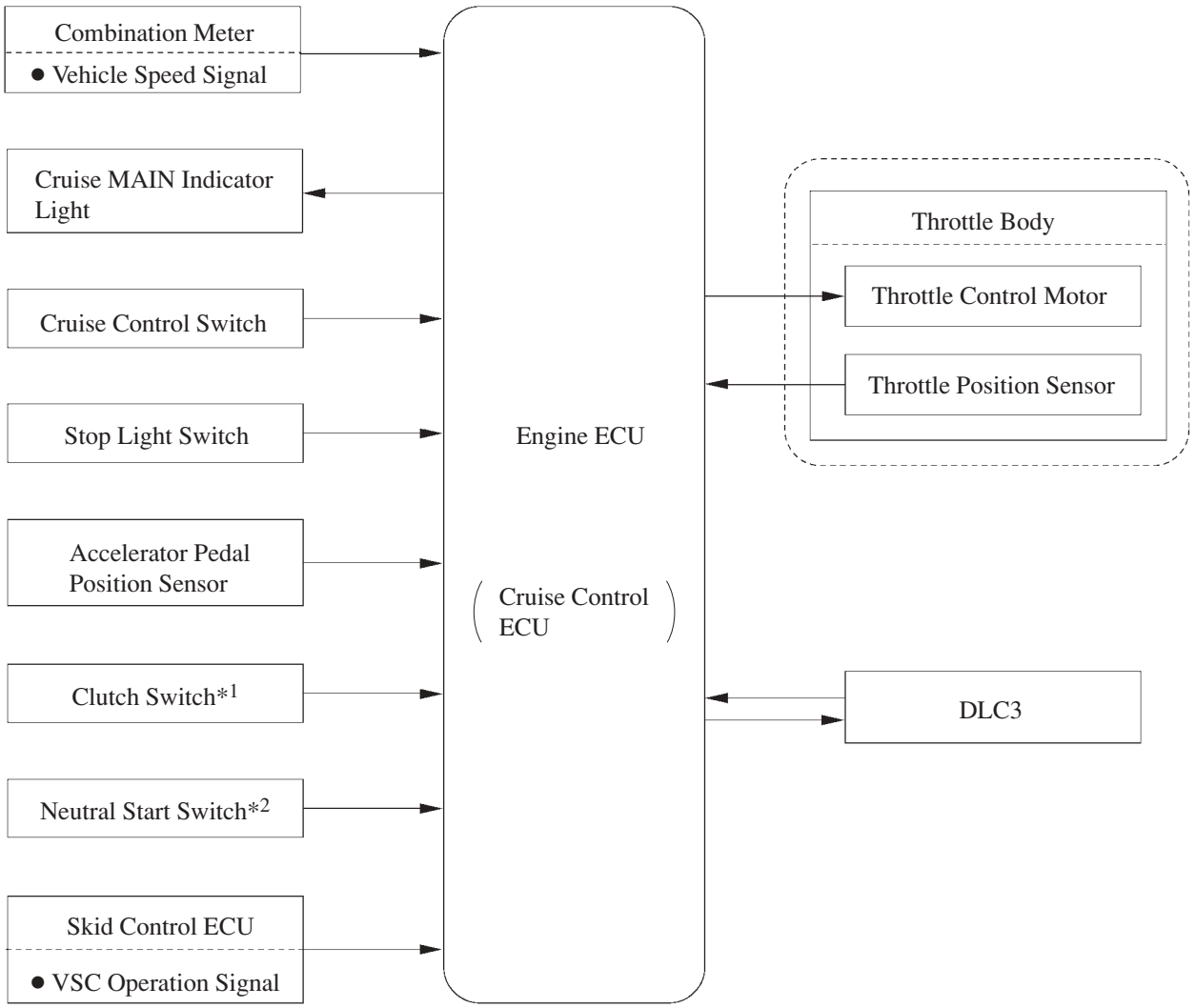

251BE25

*1: Manual Transaxle model
*2: Automatic Transaxle model

2. Layout of Main Components

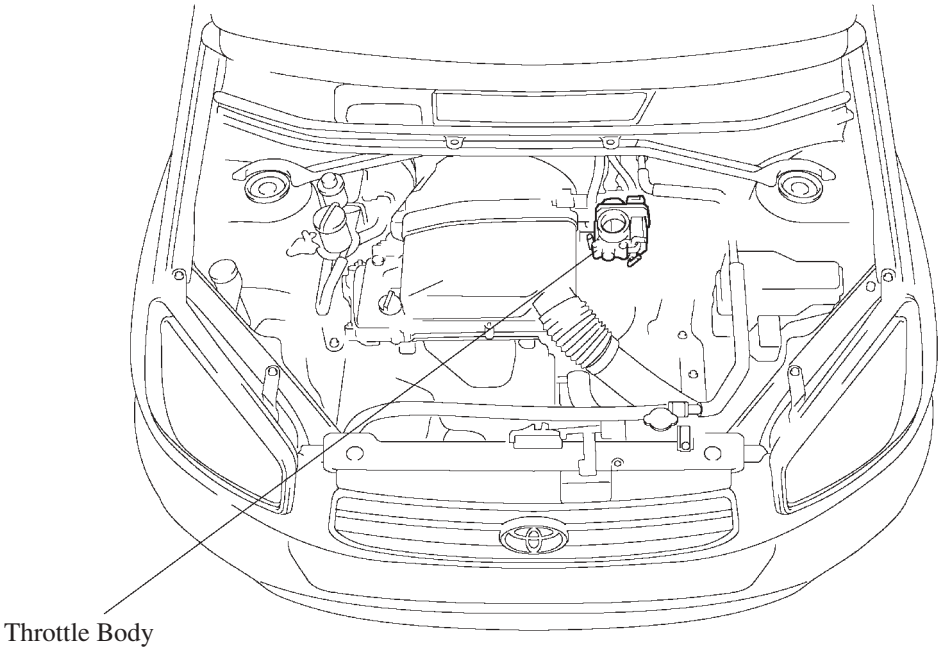

Throttle Body
- Throttle Control Motor
- Throttle Position Sensor

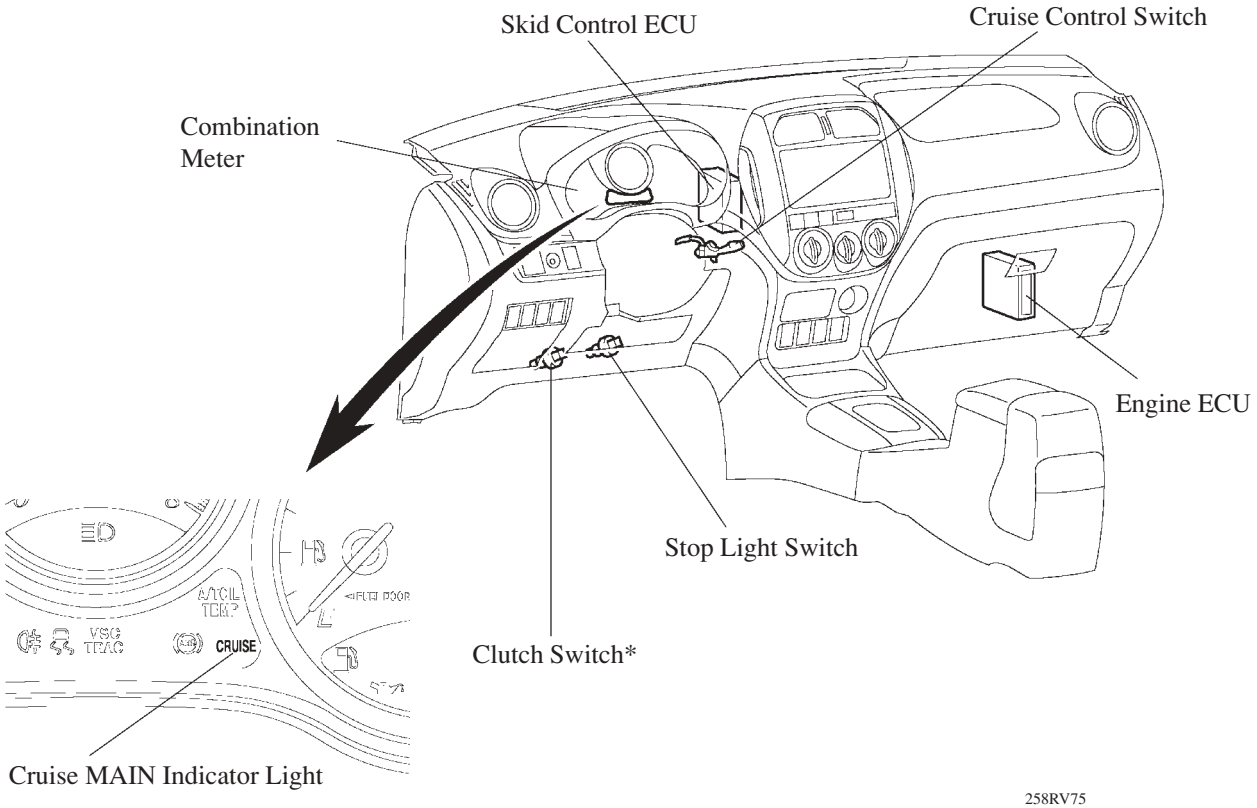

*: Only for Manual Transaxle model

3. Function of Cruise Control System

The cruise control has the following functions.

: Changed item

Function	Outline
Constant Speed Control	The engine ECU compares the actual vehicle speed and the set speed and if the vehicle speed is higher than the set speed, it activates the throttle control motor in the throttle closing direction. If the vehicle speed is lower than the set speed, it activates the throttle motor in the throttle opening direction.
Set Control	When this system fulfils the following conditions, and the cruise control switch is pressed to the SET/– side and released with the MAIN switch turned on, the engine ECU stores the vehicle speed and controls it constantly at that speed. ● The vehicle is running within a cruising speed control range [from approx. 40 km/h (25 mph) to 200 km/h (124 mph)].
Coast Control	When the cruise control switch is kept pushed to the SET/– side while running in the cruise control mode, the throttle control motor is energized in the throttle closing direction. The vehicle keeps decelerating the engine ECU stores the vehicle speed when the hand is released from the cruise control switch. From then on, the engine ECU controls the vehicle speed at that speed constantly.
Tap-Down Control	When the difference between the actual vehicle speed and the set speed is less than 5 km/h (3 mph), the set speed can be lowered approx. 1.6 km/h (1 mph) each time by operating the SET/– switch quickly within approx. 0.6 seconds.
Accelerator Control	When the cruise control switch is kept pushed to the RES/+ side while running in the cruise control mode, the throttle control motor is energized in the throttle opening direction. The vehicle keeps accelerating and the engine ECU stores the vehicle speed when the hand is released from the cruise control switch. From then on, the engine ECU controls the vehicle speed at that speed constantly.
Tap-Up Control	When the difference between the actual vehicle speed and the set speed is less than 5 km/h (3 mph), the set speed can be increased approx. 1.6 km/h (1 mph) each time by operating the RES/+ switch quickly within approx. 0.6 seconds.
Low Speed Limit Control	The low speed limit is the lowest speed that cruise control can be set and is designed at approx. 40 km/h (25 mph). The cruise control cannot be set below that speed. If the vehicle speed drops below that speed while running in the cruise control mode, the cruise control is cancelled automatically and the set speed in the memory is cleared.
High Speed Limit Control	The high speed limit, which is the highest speed to which the cruise control can be set, is designed to be approximately 200 km/h (124 mph). Thus, the cruise control cannot be set if the speed at which the vehicle is being driven is higher than the high speed limit. Also, it is not possible to accelerate the vehicle higher than the high speed limit by operating the RES/+ switch.
Manual Cancel Control	If any of the following signals is sent to the engine ECU while the vehicle is running in the cruise control, the cruise control is cancelled accordingly. ● Stop light switch ON signal (Depress the brake pedal) ● D position circuit in Park/Neutral position switch OFF signal (Shift the transmission shift lever from D to N, 3, 2, or L) ● CANCEL switch ON signal ● MAIN switch OFF signal ● During VSC operation

(Continue)

Function	Outline
Resume Control	After the cruise control mode is cancelled by any of the cancel switches, the mode can be resumed and controlled at the set speed by operating the cruise control switch in the RES/+ direction providing that the vehicle speed has not dropped below the low speed limit [approx. 40 km/h (25 mph)]. The mode cannot be resumed if the vehicle speed once drops below the low speed limit, because the speed in the memory is cleared.
Automatic Cancel Control	When any of the following conditions occur during cruise control driving, the speed that is set in the memory is cleared to cancel the cruise control mode. Furthermore, the cruise main indicator light blinks until the MAIN switch is turned OFF, and the operation of the cruise control is disabled until the MAIN switch is turned ON again. ● Stop light switch open or short circuit ● The vehicle speed signal is not set for a predetermined period of time (approx. 140 msec) ● ETC-i malfunction
	When any of the following conditions occur during the cruise control driving, the speed that is set in the memory is cleared to cancel the cruise control mode. Furthermore, the cruise main indicator light blinks until the MAIN switch is turned OFF, and the operation of the cruise control is disabled until the ignition switch is turned OFF again. ● Stop light switch input signal abnormal ● Cancel circuit malfunction
	When any of the following conditions occurs during the cruise control driving, the set speed in the memory is cleared to cancel the cruise control mode. Cruise control can be resumed at the set speed by operating the SET or RESUME switch providing that the vehicle speed is above the lower speed limit [approx. 40 km/h (25 mph)]. ● The vehicle speed falls below the low speed limit [approx. 40 km/h (25 mph)] ● The vehicle speed drops more than 16 km/h (10 mph) below the set speed.
Automatic Transmission Control	When the vehicle is cruising uphill, there is a case where the overdrive turns off depending on the ECT control. After that, when the Engine control ECU judges the end of cruising up from the throttle valve opening angle, the overdrive will turn on again. Also, in case that the overdrive turns off during accelerator or resume control, it will turns on after finishing accelerator or resume control.

■NAVIGATION WITH AV SYSTEM

1. General

The navigation with AV (Audio Visual) system analyzes the vehicle's position based on vehicle speed, map data, and the satellite-based GPS (Global Positioning System), and guides the driver to the input destination through voice instruction and display.
The navigation with AV system has been added as optional equipment on the models for Europe.

- The 6.5-inch diagonal LCD (Liquid Crystal Display) screen with a pressure sensitive touch panel, offers improved easy of use.
- DVD (Digital Versatile Disc) has been selected as the medium for strong the map data enabling a large volume of data to be utilized.
- The navigation voice guidance can be selected as the from eight languages: English, German, French, Dutch, Italian, Danish, Swedish and Spanish.

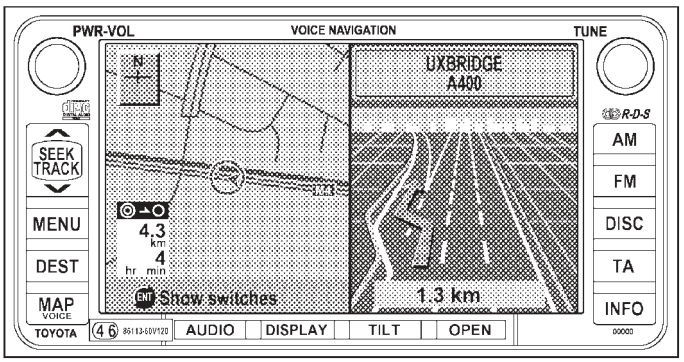

258RV68

▶ System Diagram ◀

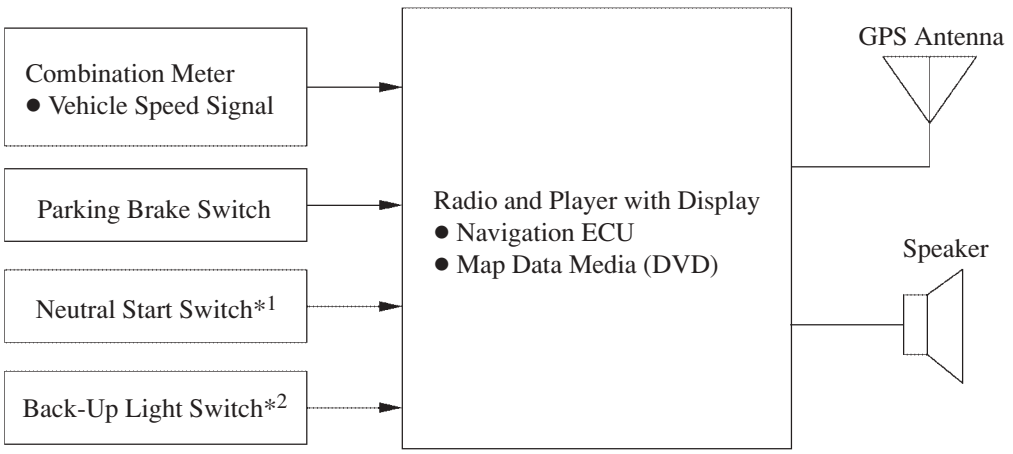

251BE38

*1: For Automatic Transaxle model
*2: For Manual Transaxle model

2. Layout of Main Components

Radio and Player with Display

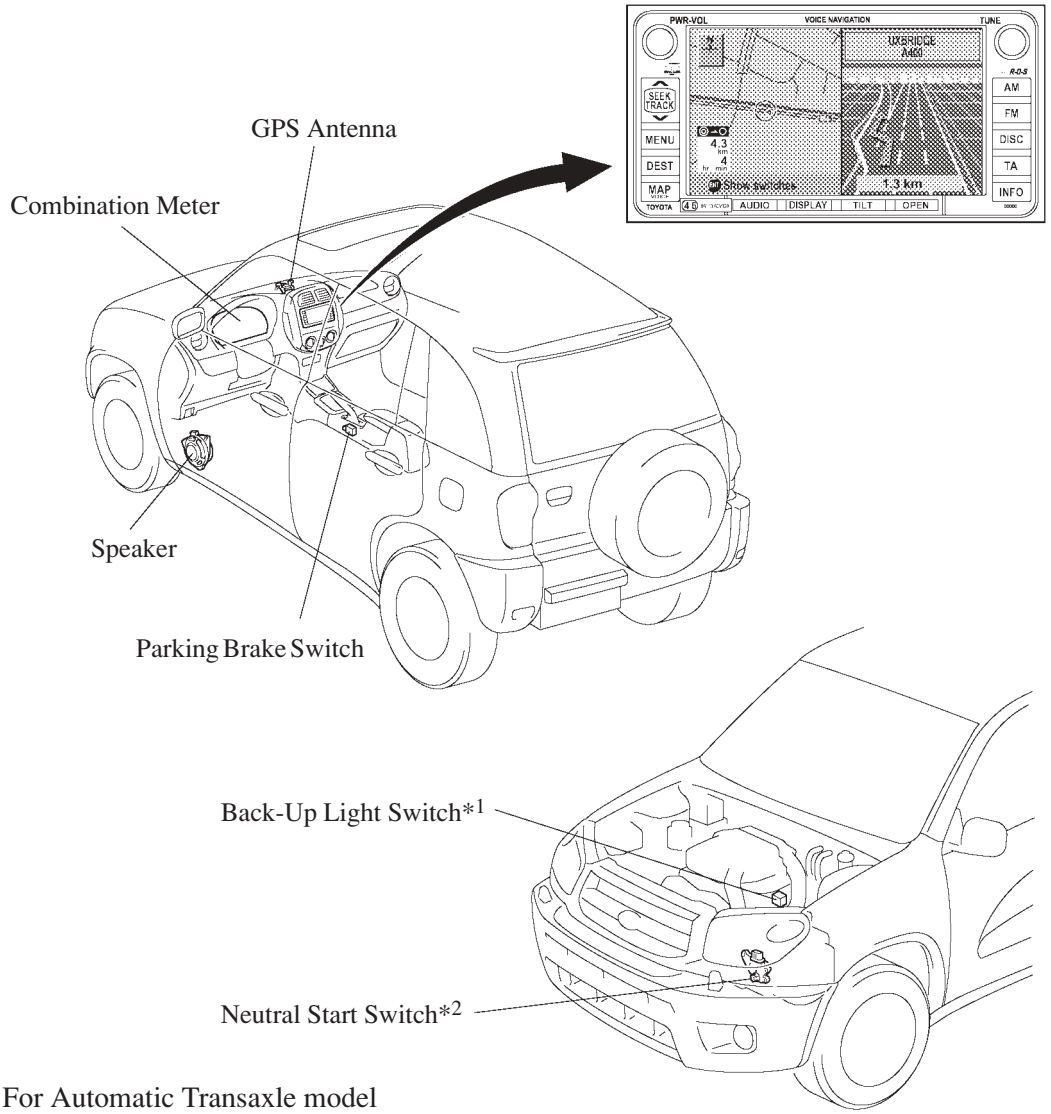

*1: For Automatic Transaxle model
*2: For Manual Transaxle model

3. Construction and Operation

General

The main functions of navigation system are listed below.

Function	Outline
Adjustment Screen	Image quality adjustment screen indication.
Navigation Screen Display	● Enlargement/reduction, rotation and movement of map. ● Indication of current position and direction of travel. ● Correction of current position. ● Setting change and indication of route. ● Voice guidance. There are many additional functions.
Diagnosis Screen Display	● Service Check Menu. ● Display Check. ● Navigation Check.

Navigation Screen Display

- Based on the map data on the DVD, signal from the GPS satellites, signals from the built-in gyro sensor, and signals from the vehicle's speed sensor, the vehicle's present position, direction of travel, and driven distance are calculated and displayed on the navigation display.
- The RAV4 has the GPS voice navigation system functions listed below:

: New function

Item		Function
Map Display	Linear Touch Scroll	Enables smooth scrolling by connecting the touch points on the screen.
	On-route Scroll	Scrolls the center of the cursor forward and reverse constantly along the route.
	Heading Up	Displays the map so that the direction of the route progression head up during route guidance.
	Map Color Change	Depending on the position of the headlight switch, the screen changes to the day and night mode.
	Front Wide	Displays a map in the direction of travel of the vehicle in an enlarged form. (Heading up only)
	Multi-step Scale Display	Changes and displays the map scale in 13 stages.
	Step-less Scale Display	Changes the scale of the map to the desired scale without the basic 13 steps.
	Direct Scale Change	Directly selects and displays the map scale.
	Split-view Display	Displays different modes on a screen that is split into two views.
	Points-of-interest Display	Displays selected types of marks on the map.
	Road Number Sign Board Display	Displays the road number on the map.
	Compass Mode Screen	Displays the direction of travel and detailed data of the present location.
	RDS-TMC Info. Indication	Receives FM multiplex broadcasts and displays traffic information on the map screen.
	Map Coverage Info. Screen	Displays the map area that is recorded on DVD.
	Whole Route Function	Changes the display scale of the map screen and displays the whole route.
	Street Name Indication on Scrolled Map	Displays the street name and the city name even when the map screen is being scrolled.
Destination Search	Last Destination Memory	Stores 20 locations of coordinates, names and times that have been set as destinations in the past.
	Hybrid Points-of-interest Search	Narrows the search by names of the points-of-interest, category, and areas.
	Points-of-interest Pinpoint Display	Pinpoints and displays the position of the point-of-interest.
	House Number Search	Searches for a house number.
	Special Memory Point	Sets a pre-registered point as a destination point while driving.
	Nearest Point-of-interest Search List Display	Searches nearest points-of-interest and displays a list.
	Intersection Search	By specifying two streets, the point at which they intersect is set as the destination point.
	Motorway Entrance/ Exit Search	Searches for the destination by the name of the street that connects to a Motorway entrance/exit.
	Coordinate Search	User can input destination like a oasis in the desert etc.
	Telephone Number Search	Searches a facility by its telephone number.
	POI, Brand Icon Indication	Displays icons for points of interest.

(Continued)

Item		Function
Route Search	Multiple Destination Setting	Sets multiple destinations. It can also rearrange the sequence of the destinations.
	Route Search	Searches for multiple routes.
	Search Condition Designation	Searches for the recommended, shortest, and other routes.
	Regulated Road Consideration	Performs search while considering regulated roads.
	Avoidance Area	Avoids a designated area and searches a route.
	Route Search Considering Traffic Info.	Searches for a route that detours traffic congestion.
	Motorway Mode Screen	Displays information on facilities in the vicinity of the motorway exits and entrances.
	Border Guidance	Displays a border mark when crossing a border.
Guidance	Destination Direction Arrow Display	Uses arrows along the road to display the direction of the destination during route guidance.
	Off-Route Arrow Display	Uses arrows to display the direction of the destination during off-route.
	Rotary Guidance	Guidance that renders the entry and exit into a rotary as a single branching point.
	Right or Left Turn Guidance	Voice guidance to instruct the direction of travel to be taken.
	Motorway Direction of Travel Guidance	Voice guidance to instruct the direction of travel to take on the Motorway.
	Distance Display Destination	Displays the distance from the present location to the destination.
	Motorway Branch Type Specimen Guidance	Type specimen for guidance to a Motorway branch.
	Intersection map Display	Intersection map appears when approaching an intersection.
	Turn List Display	Displays a turn list on the right side of the two-screen display.
	Calendar	Anniversary or appointment dates can be input and displayed.

Diagnosis Screen Display

The navigation system is equipped with a self-diagnosis function and can display the diagnosis menus shown on the right.
The diagnosis menu contains the following three items.

a) Service Check Menu
b) Display Check
c) Navigation Check

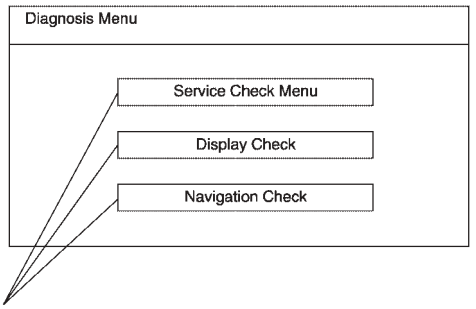

These Menus

258RV74

Service Tip

The diagnosis menu screen can be displayed according to the procedure given below.

1) Vehicle speed should be 0 km/h (0 mph).
2) Apply the parking brake.
3) Turn the ignition switch to ACC or ON.
4) Push the DISPLAY button.
5) Activate the screen adjustment screen.
6) Alternately touch the upper and lower bottom parts of the left end of the screen 3 times.

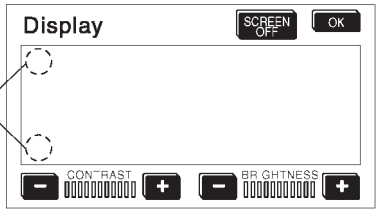

Concealed Touch Switch

199BE404

For details, refer to the RAV4 Repair Manual Supplement (Pub. No. RM1078E)

10

■AUDIO SYSTEM

The steering pad switches, which have been made available on the models for Europe as optional equipment, enable the operation of the audio unit without the driver's hands leaving the steering wheel.

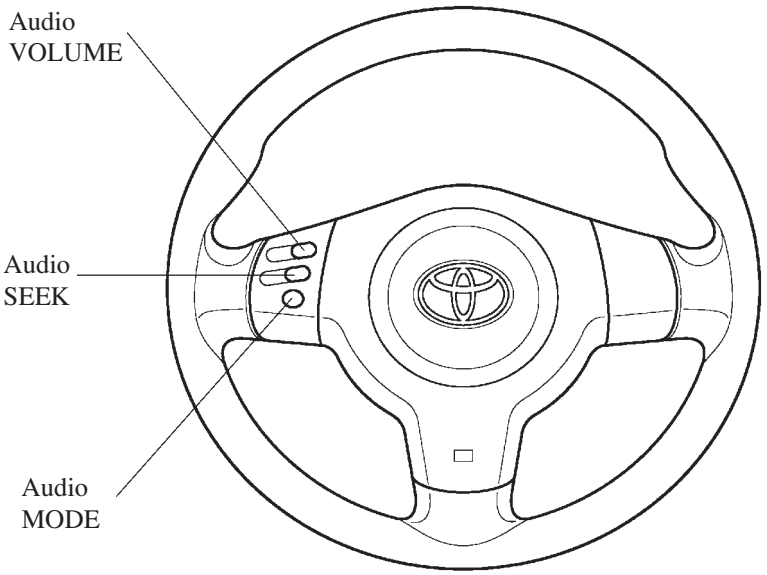

▶ Switch Function ◀

Function			Push	Push and Hold
Audio	VOL		Audio Volume Up, Down	Continuous Increase or Decrease
	SEEK	AM/FM	Channel Up, Down	Seek Up, Down
		TAPE	Serch FF, REW	FF, REW
		CD	Track Up, Down	Disc Up, Down
	MODE		Audio AM/FM, TAPE, CD/MD Selection	Power OFF

▶ Wiring Diagram ◀

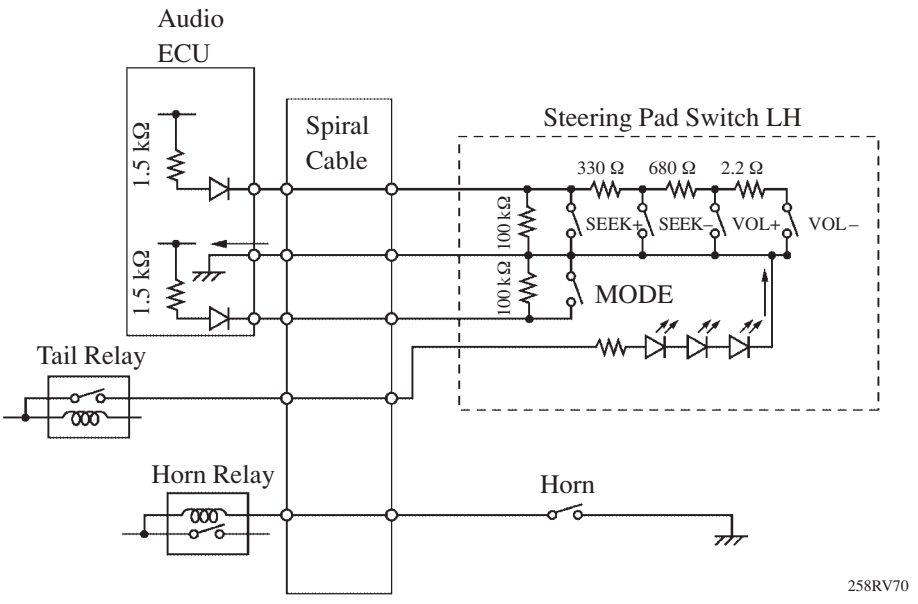

– MEMO –

MAJOR TECHNICAL SPECIFICATIONS

Item \ Area				Europe			
Body Type				3-Door Wagon			
Vehicle Grade				Standard			
Model Code				ACA20R-AZMNKW	ACA20R-AZPNKW	ACA20L-AZMNKW	ACA20L-AZPNKW
Major Dimensions & Vehicle Weights	Overall	Length	mm (in.)	3805 (149.8)*1	3805 (149.8)*1	3805 (149.8)*1	3805 (149.8)*1
		Width	mm (in.)	1735 (68.3)*2	1735 (68.3)*2	1735 (68.3)*2	1735 (68.3)*2
		Height	mm (in.)	1680 (66.1)*3, *4	1680 (66.1)*3, *4	1680 (66.1)*3, *4	1680 (66.1)*3, *4
	Wheel Base		mm (in.)	2280 (89.8)	2280 (89.8)	2280 (89.8)	2280 (89.8)
	Tread	Front	mm (in.)	1505 (59.3)*5	1505 (59.3)*5	1505 (59.3)*5	1505 (59.3)*5
		Rear	mm (in.)	1495 (58.9)*6	1495 (58.9)*6	1495 (58.9)*6	1495 (58.9)*6
	Room	Length	mm (in.)	1735 (68.3)	1735 (68.3)	1735 (68.3)	1735 (68.3)
		Width	mm (in.)	1465 (57.7)	1465 (57.7)	1465 (57.7)	1465 (57.7)
		Height	mm (in.)	1220 (48.0)*7	1220 (48.0)*7	1220 (48.0)*7	1220 (48.0)*7
	Overhang	Front	mm (in.)	760 (29.9)	760 (29.9)	760 (29.9)	760 (29.9)
		Rear	mm (in.)	765 (30.1)*1	765 (30.1)*1	765 (30.1)*1	765 (30.1)*1
	Min. Running Ground Clearance		mm (in.)	205 (8.1)*8	205 (8.1)*8	205 (8.1)*8	205 (8.1)*8
	Angle of Approach		degrees	31°*9	31°*9	31°*9	31°*9
	Angle of Departure		degrees	44°*9	44°*9	44°*9	44°*9
	Curb Weight	Front	kg (lb)	685 (1510) - 750 (1653)	720 (1587) - 785 (1731)	685 (1510) - 750 (1653)	720 (1587) - 785 (1731)
		Rear	kg (lb)	525 (1157) - 575 (1268)	525 (1157) - 575 (1268)	525 (1157) - 575 (1268)	525 (1157) - 575 (1268)
		Total	kg (lb)	1210 (2689) - 1325 (2921)	1245 (2745) - 1360 (2998)	1210 (2689) - 1325 (2921)	1245 (2745) - 1360 (2998)
	Gross Vehicle Weight	Front	kg (lb)	865 (1907)	865 (1907)	865 (1907)	865 (1907)
		Rear	kg (lb)	820 (1808)	820 (1808)	820 (1808)	820 (1808)
		Total	kg (lb)	1685 (3715)	1685 (3715)	1685 (3715)	1685 (3715)
	Fuel Tank Capacity		ℓ (Imp.gal.)	57 (12.76)	57 (12.76)	57 (12.76)	57 (12.76)
	Luggage Compartment Capacity		m³ (cu.ft.)	0.15 (5.30)	0.15 (5.30)	0.15 (5.30)	0.15 (5.30)
Performance	Max. Speed		km/h (mph)	185 (114.96)	175 (108.75)	185 (114.96)	175 (108.75)
	Max. Cruising Speed		km/h (mph)	—	—	—	—
	Acceleration	0 to 100 km/h	sec.	10.6	10.8	10.6	10.8
		0 to 400 m	sec.	16.9	17.5	16.9	17.5
	Max. Permissible Speed	1st Gear	km/h (mph)	—	63 (39)	—	63 (39)
		2nd Gear	km/h (mph)	—	113 (70)	—	113 (70)
		3rd Gear	km/h (mph)	—	—	—	—
		4th Gear	km/h (mph)	—	—	—	—
	Min. Turning Radius	Tire	m (ft.)	5.0 (16.41)	5.0 (16.41)	5.0 (16.41)	5.0 (16.41)
		Body	m (ft.)	5.3 (17.39)	5.3 (17.39)	5.3 (17.39)	5.3 (17.39)
Engine	Engine Type			1AZ-FE	1AZ-FE	1AZ-FE	1AZ-FE
	Valve Mechanism			16-Valve, DOHC, Chain Drive	16-Valve, DOHC, Chain Drive	16-Valve, DOHC, Chain Drive	16-Valve, DOHC, Chain Drive
	Bore x Stroke		mm (in.)	86.0 x 86.0 (3.39 x 3.39)	86.0 x 86.0 (3.39 x 3.39)	86.0 x 86.0 (3.39 x 3.39)	86.0 x 86.0 (3.39 x 3.39)
	Displacement		cm³ (cu.in.)	1998 (121.9)	1998 (121.9)	1998 (121.9)	1998 (121.9)
	Compression Ratio			9.8 : 1	9.8 : 1	9.8 : 1	9.8 : 1
	Fuel System			EFI	EFI	EFI	EFI
	Research Octane No. or Cetane No. (Diesel)			95 or higher	95 or higher	95 or higher	95 or higher
	Max. Output		kW/rpm	110/6000 (EEC)	110/6000 (EEC)	110/6000 (EEC)	110/6000 (EEC)
	Max. Torque		N·m/rpm	192/4000 (EEC)	192/4000 (EEC)	192/4000 (EEC)	192/4000 (EEC)
Engine Electrical	Battery Capacity (5HR)		Voltage & Amp. hr.	12-27	12-36	12-27	12-36
	Alternator Output		Watts	1080	1200	1080	1200
	Starter Output		kW	1.2	1.2	1.2	1.2
Chassis	Clutch Type			Dry, Single Plate, Diaphragm	—	Dry, Single Plate, Diaphragm	—
	Transmission Type			E352F	U140F	E352F	U140F
	Transmission Gear Ratio	In First		3.833	3.938	3.833	3.938
		In Second		2.045	2.194	2.045	2.194
		In Third		1.333	1.411	1.333	1.411
		In Fourth		1.028	1.019	1.028	1.019
		In Fifth		0.820	—	0.820	—
		In Reverse		3.583	3.141	3.583	3.141
	Counter Gear Ratio			—	1.019	—	1.019
	Differential Gear Ratio (Final)			4.562	3.291	4.562	3.291
	Transfer and Rear Differential Gear Ratio			2.928	2.928	2.928	2.928
	Rear Differential Gear Size		in.	6.7”	6.7”	6.7”	6.7”
	Brake Type	Front		Ventilated Disc	Ventilated Disc	Ventilated Disc	Ventilated Disc
		Rear		Leading-Trailing Drum / Solid Disc*12	Leading-Trailing Drum / Solid Disc*12	Leading-Trailing Drum / Solid Disc*12	Leading-Trailing Drum / Solid Disc*12
	Parking Brake Type			Leading-Trailing Drum / Duo-Servo Drum*12	Leading-Trailing Drum / Duo-Servo Drum*12	Leading-Trailing Drum / Duo-Servo Drum*12	Leading-Trailing Drum / Duo-Servo Drum*12
	Brake Booster Type and Size		in.	Single, 10”	Single, 10”	Single, 10”	Single, 10”
	Proportioning Valve Type			Dual P Valve*10	Dual P Valve*10	Dual P Valve*10	Dual P Valve*10
	Suspension Type	Front		MacPherson Strut	MacPherson Strut	MacPherson Strut	MacPherson Strut
		Rear		Double Wishbone	Double Wishbone	Double Wishbone	Double Wishbone
	Stabilizer Bar	Front		Standard	Standard	Standard	Standard
		Rear		Standard	Standard	Standard	Standard
	Steering Gear Type			Rack and Pinion	Rack and Pinion	Rack and Pinion	Rack and Pinion
	Steering Gear Ratio (Overall)			16.4	16.4	16.4	16.4
	Power Steering Type			Integral Type	Integral Type	Integral Type	Integral Type

*1: With Half Type Cover Spare Tire (215/70R16, Steel Wheel), 215/70R16 (Alminium Wheel) + 5 mm (0.2 in.), 235/60R16 (Alminium Wheel) + 15 mm (0.6 in.) With Hard Cover for Spare Tire, All Tire Size + 45 mm (1.8 in.)
*2: With Overfender + 50 mm (2.0 in.)
*3: With Roof Rail (215/70R16) + 15 mm (0.6 in.)
*4: Model with 235/60R16 and Roof Rail + 5 mm (0.2 in.), without Roof Rail – 10 mm (0.4 in.)
*5: Model with 235/60R16 + 20 mm (0.8 in.)
*6: Model with 235/60R16 + 25 mm (1.0 in.)
*7: With Moon Roof (3 Door) – 50 mm (2.0 in.), (5 door) – 45 mm (1.8 in.)

Europe					
5-Door Wagon				3-Door Wagon	
Standard					
ACA21R-AWMNKW	ACA21R-AWPNKW	ACA21L-AWMNKW	ACA21L-AWPNKW	ZCA25R-AZMNKW	ZCA25L-AZMNKW
4200 (165.4)*1	4200 (165.4)*1	4200 (165.4)*1	4200 (165.4)*1	3805 (149.8)*1	3805 (149.8)*1
1735 (68.3)*2	1735 (68.3)*2	1735 (68.3)*2	1735 (68.3)*2	1735 (68.3)*2	1735 (68.3)*2
1690 (66.5)*3, *4	1690 (66.5)*3, *4	1690 (66.5)*3, *4	1690 (66.5)*3, *4	1655 (65.2)*3, *4	1680 (66.1)*3, *4
2490 (98.0)	2490 (98.0)	2490 (98.0)	2490 (98.0)	2280 (89.8)	2280 (89.8)
1505 ((59.3)*5	1505 (59.3)*5	1505 (59.3)*5	1505 (59.3)*5	1510 (59.4)*5	1505 (59.3)*5
1495 (58.9)*6	1495 (58.9)*6	1495 (58.9)*6	1495 (58.9)*6	1500 (59.1)*6	1495 (58.9)*6
1735 (68.3)	1735 (68.3)	1735 (68.3)	1735 (68.3)	1735 (68.3)	1735 (68.3)
1465 (57.7)	1465 (57.7)	1465 (57.7)	1465 (57.7)	1465 (57.7)	1465 (57.7)
1230 (48.4)*7	1230 (48.4)*7	1230 (48.4)*7	1230 (48.4)*7	1220 (48.0)*7	1220 (48.0)*7
760 (29.9)	760 (29.9)	760 (29.9)	760 (29.9)	760 (29.9)	760 (29.9)
950 (37.4)*1	950 (37.4)*1	950 (37.4)*1	950 (37.4)*1	765 (30.1)*1	765 (30.1)*1
205 (8.1)*8	205 (8.1)*8	205 (8.1)*8	205 (8.1)*8	190 (7.5)*8	205 (8.1)*8
31°*9	31°*9	31°*9	31°*9	31°*9	31°*9
31°*9	31°*9	31°*9	31°*9	44°*9	44°*9
710 (1565) - 770 (1698)	745 (1642) - 805 (1775)	710 (1565) - 770 (1698)	745 (1642) - 805 (1775)	630 (1389) - 690 (1521)	630 (1389) - 690 (1521)
560 (1235) - 615 (1356)	560 (1235) - 615 (1356)	560 (1235) - 615 (1356)	560 (1235) - 615 (1356)	490 (1080) - 540 (1190)	490 (1080) - 540 (1190)
1270 (2800) - 1385 (3054)	1305 ( ) - 1420 (3131)	1270 (2800) - 1385 (3054)	1305 ( ) - 1420 (3131)	1120 (2469) - 1230 (2712)	1120 (2469) - 1230 (2712)
910 (2006)	910 (2006)	910 (2006)	910 (2006)	805 (1775)	805 (1775)
915 (2017)	915 (2017)	915 (2017)	915 (2017)	785 (1731)	785 (1731)
1825 (4023)	1825 (4023)	1825 (4023)	1825 (4023)	1590 (3505)	1590 (3505)
57 (12.76)	57 (12.76)	57 (12.76)	57 (12.76)	57 (12.76)	57 (12.76)
0.40 (14.12)	0.40 (14.12)	0.40 (14.12)	0.40 (14.12)	0.15 (5.30)	0.15 (5.30)
185 (114.96)	175 (108.75)	185 (114.96)	175 (108.75)	175 (108.75)	175 (108.75)
—	—	—	—	—	—
10.6	10.8	10.6	10.8	12.2	12.2
16.9	17.5	16.9	17.5	17.6	17.6
—	63 (39)	—	63 (39)	—	—
—	113 (70)	—	113 (70)	—	—
—	—	—	—	—	—
—	—	—	—	—	—
5.0 (16.41)	5.0 (16.41)	5.0 (16.41)	5.0 (16.41)	5.0 (16.41)	5.0 (16.41)
5.3 (17.39)	5.3 (17.39)	5.3 (17.39)	5.3 (17.39)	5.3 (17.39)	5.3 (17.39)
1AZ-FE	1AZ-FE	1AZ-FE	1AZ-FE	1ZZ-FE	1ZZ-FE
16-Valve, DOHC, Chain Drive	16-Valve, DOHC, Chain Drive	16-Valve, DOHC, Chain Drive	16-Valve, DOHC, Chain Drive	16-Valve, DOHC, Chain Drive	16-Valve, DOHC, Chain Drive
86.0 x 86.0 (3.39 x 3.39)	86.0 x 86.0 (3.39 x 3.39)	86.0 x 86.0 (3.39 x 3.39)	86.0 x 86.0 (3.39 x 3.39)	79.0 x 91.5 (3.11 x 3.33)	79.0 x 91.5 (3.11 x 3.33)
1998 (121.9)	1998 (121.9)	1998 (121.9)	1998 (121.9)	1794 (109.5)	1794 (109.5)
9.8 : 1	9.8 : 1	9.8 : 1	9.8 : 1	10.0 : 1	10.0 : 1
EFI	EFI	EFI	EFI	EFI	EFI
95 or higher	95 or higher	95 or higher	95 or higher	95 or higher	95 or higher
110 / 6000 (EEC)	110 / 6000 (EEC)	110 / 6000 (EEC)	110 / 6000 (EEC)	92 / 6000 (EEC)	92 / 6000 (EEC)
192 / 4000 (EEC)	192 / 4000 (EEC)	192 / 4000 (EEC)	192 / 4000 (EEC)	161 / 4200 (EEC)	161 / 4200 (EEC)
12-27	12-36	12-27	12-36	12-27	12-27
1080	1200	1080	1200	1080	1080
1.2	1.2	1.2	1.2	0.8	0.8
Dry, Single Plate, Diaphragm	—	Dry, Single Plate, Diaphragm	—	Dry, Single Plate, Diaphragm	Dry, Single Plate, Diaphragm
E352F	U140F	E352F	U140F	C54	C54
3.833	3.938	3.833	3.938	3.545	3.545
2.045	2.194	2.045	2.194	1.904	1.904
1.333	1.411	1.333	1.411	1.310	1.310
1.028	1.019	1.028	1.019	1.031	1.031
0.820	—	0.820	—	0.864	0.864
3.583	3.141	3.583	3.141	3.250	3.250
—	1.019	—	1.019	—	—
4.562	3.291	4.562	3.291	4.312	4.312
2.928	2.928	2.928	2.928	—	—
6.7”	6.7”	6.7”	6.7”	—	—
Ventilated Disc	Ventilated Disc	Ventilated Disc	Ventilated Disc	Ventilated Disc	Ventilated Disc
Leading-Trailing Drum / Solid Disc*12	Leading-Trailing Drum / Solid Disc*12	Leading-Trailing Drum / Solid Disc*12	Leading-Trailing Drum / Solid Disc*12	Leading-Trailing Drum / Solid Disc*12	Leading-Trailing Drum / Solid Disc*12
Leading-Trailing Drum / Duo-Servo Drum*12	Leading-Trailing Drum / Duo-Servo Drum*12	Leading-Trailing Drum / Duo-Servo Drum*12	Leading-Trailing Drum / Duo-Servo Drum*12	Leading-Trailing Drum / Duo-Servo Drum*12	Leading-Trailing Drum / Duo-Servo Drum*12
Single, 10”	Single, 10”	Single, 10”	Single, 10”	Single, 10”	Single, 10”
Dual P Valve*10	Dual P Valve*10	Dual P Valve*10	Dual P Valve*10	Dual P Valve*10	Dual P Valve*10
MacPherson Strut	MacPherson Strut	MacPherson Strut	MacPherson Strut	MacPherson Strut	MacPherson Strut
Double Wishbone	Double Wishbone	Double Wishbone	Double Wishbone	Double Wishbone	Double Wishbone
Standard	Standard	Standard	Standard	Standard	Standard
Standard	Standard	Standard	Standard	Standard	Standard
Rack and Pinion	Rack and Pinion	Rack and Pinion	Rack and Pinion	Rack and Pinion	Rack and Pinion
16.4	16.4	16.4	16.4	16.4	16.4
Integral Type	Integral Type	Integral Type	Integral Type	Integral Type	Integral Type

*8: Model with 235 / 60R16 – 10 mm (0.4 in.)
*9: Model with 235 / 60R16 – 1 degree
*10: Without ABS
*11: With 235 / 60R16 Tire
*12: Option
*13: Cold Area Specification Model

10

Item \ Area				Europe			
Body Type				5-Door Wagon		3-Door Wagon	
Vehicle Grade				Standard			
Model Code				ZCA26R-AWMNKW	ZCA26L-AWMNKW	CLA20R-AZMNYW	CLA20L-AZMNYW
Major Dimensions & Vehicle Weights	Overall	Length	mm (in.)	4200 (165.4)*1	4200 (165.4)*1	3805 (149.8)*1	3805 (149.8)*1
		Width	mm (in.)	1735 (68.3)*2	1735 (68.3)*2	1735 (68.3)*2	1735 (68.3)*2
		Height	mm (in.)	1670 (65.7)*3, *4	1670 (65.7)*3, *4	1680 (66.1)*3, *4	1680 (66.1)*3, *4
	Wheel Base		mm (in.)	2490 (98.0)	2490 (98.0)	2280 (89.8)	2280 (89.8)
	Tread	Front	mm (in.)	1510 (59.4)*5	1510 (59.4)*5	1505 (59.3)*5	1505 (59.3)*5
		Rear	mm (in.)	1500 (59.1)*6	1500 (59.1)*6	1495 (58.9)*6	1495 (58.9)*6
	Room	Length	mm (in.)	1735 (68.3)	1735 (68.3)	1735 (68.3)	1735 (68.3)
		Width	mm (in.)	1465 (57.7)	1465 (57.7)	1465 (57.7)	1465 (57.7)
		Height	mm (in.)	1230 (48.4)*7	1230 (48.4)*7	1220 (48.0)*7	1220 (48.0)*7
	Overhang	Front	mm (in.)	760 (29.9)	760 (29.9)	760 (29.9)	760 (29.9)
		Rear	mm (in.)	950 (37.4)*1	950 (37.4)*1	765 (30.1)*1	765 (30.1)*1
	Min. Running Ground Clearance		mm (in.)	195 (7.7)*8	195 (7.7)*8	205 (8.1)*8	205 (8.1)*8
	Angle of Approach		degrees	31°*9	31°*9	31°*9	31°*9
	Angle of Departure		degrees	31°*9	31°*9	44°*9	44°*9
	Curb Weight	Front	kg (lb)	655 (1444) - 710 (1565)	655 (1444) - 710 (1565)	785 (1731) - 850 (1874)	785 (1731) - 850 (1874)
		Rear	kg (lb)	525 (1157) - 580 (1279)	525 (1157) - 580 (1279)	525 (1157) - 575 (1268)	525 (1157) - 575 (1268)
		Total	kg (lb)	1180 (2601) - 1290 (2844)	1180 (2601) - 1290 (2844)	1315 (2899) - 1425 (3142)	1315 (2899) - 1425 (3142)
	Gross Vehicle Weight	Front	kg (lb)	850 (1874)	850 (1874)	965 (2127)	965 (2127)
		Rear	kg (lb)	880 (1940)	880 (1940)	820 (1808)	820 (1808)
		Total	kg (lb)	1730 (3814)	1730 (3814)	1825 (4023)	1825 (4023)
	Fuel Tank Capacity		ℓ (Imp.gal.)	57 (12.76)	57 (12.76)	57 (12.76)	57 (12.76)
	Luggage Compartment Capacity		m³ (cu.ft.)	0.40 (14.12)	0.40 (14.12)	0.15 (5.30)	0.15 (5.30)
Performance	Max. Speed		km/h (mph)	175 (108.75)	175 (108.75)	—	—
	Max. Cruising Speed		km/h (mph)	—	—	—	—
	Acceleration	0 to 100 km/h	sec.	12.2	12.2	—	—
		0 to 400 m	sec.	17.6	17.6	—	—
	Max. Permissible Speed	1st Gear	km/h (mph)	—	—	41 (25), 40 (25)*11	41 (25), 40 (25)*11
		2nd Gear	km/h (mph)	—	—	77 (48), 75 (47)*11	77 (48), 75 (47)*11
		3rd Gear	km/h (mph)	—	—	117 (73), 115 (71)*11	117 (73), 115 (71)*11
		4th Gear	km/h (mph)	—	—	161 (100), 157 (98)*11	161 (100), 157 (98)*11
	Min. Turning Radius	Tire	m (ft.)	5.3 (17.39)	5.3 (17.39)	5.0 (16.41)	5.0 (16.41)
		Body	m (ft.)	5.6 (18.37)	5.6 (18.37)	5.3 (17.39)	5.3 (17.39)
Engine	Engine Type			1ZZ-FE	1ZZ-FE	1CD-FTV	1CD-FTV
	Valve Mechanism			16-Valve, DOHC, Chain Drive	16-Valve, DOHC, Chain Drive	16-Valve, DOHC,	16-Valve, DOHC,
	Bore x Stroke		mm (in.)	79.0 x 91.5 (3.11 x 3.33)	79.0 x 91.5 (3.11 x 3.33)	82.2 x 94.0 (3.24 x 3.7)	82.2 x 94.0 (3.24 x 3.7)
	Displacement		cm³ (cu.in.)	1794 (109.5)	1794 (109.5)	1995 (121.7)	1995 (121.7)
	Compression Ratio			10.0 : 1	10.0 : 1	18.6 : 1	18.6 : 1
	Fuel System			EFI	EFI	Common-Rail Type	Common-Rail Type
	Research Octane No. or Cetane No. (Diesel)			95 or higher	95 or higher	48 or higher	48 or higher
	Max. Output		kW/rpm	92/6000 (EEC)	92/6000 (EEC)	85/4000 (EEC)	85/4000 (EEC)
	Max. Torque		N·m/rpm	161/4200 (EEC)	161/4200 (EEC)	250/1800 - 3000 (EEC)	250/1800 - 3000 (EEC)
Engine Electrical	Battery Capacity (5HR)		Voltage & Amp. hr.	12-27	12-27	12-55	12-55
	Alternator Output		Watts	1080	1080	1560	1560
	Starter Output		kW	0.8	0.8	1.4, 2.2*13	1.4, 2.2*13
Chassis	Clutch Type			Dry, Single Plate, Diaphragm	Dry, Single Plate, Diaphragm	Dry, Single Plate, Diaphragm	Dry, Single Plate, Diaphragm
	Transmission Type			C54	C54	E353F	E353F
	Transmission Gear Ratio	In First		3.545	3.545	3.833	3.833
		In Second		1.904	1.904	2.045	2.045
		In Third		1.310	1.310	1.333	1.333
		In Fourth		1.031	1.031	0.972	0.972
		In Fifth		0.864	0.864	0.731	0.731
		In Reverse		3.250	3.250	3.583	3.583
	Counter Gear Ratio			—	—	—	—
	Differential Gear Ratio (Final)			4.312	4.312	4.235	4.235
	Transfer and Rear Differential Gear Ratio			—	—	2.928	2.928
	Rear Differential Gear Size		in.	—	—	6.7”	6.7”
	Brake Type	Front		Ventilated Disc	Ventilated Disc	Ventilated Disc	Ventilated Disc
		Rear		Leading-Trailing Drum / Solid Disc*12	Leading-Trailing Drum / Solid Disc*12	Leading-Trailing Drum / Solid Disc*12	Leading-Trailing Drum / Solid Disc*12
	Parking Brake Type			Leading-Trailing Drum / Duo-Servo Drum*12	Leading-Trailing Drum / Duo-Servo Drum*12	Leading-Trailing Drum / Duo-Servo Drum*12	Leading-Trailing Drum / Duo-Servo Drum*12
	Brake Booster Type and Size		in.	Single, 10”	Single, 10”	Single, 9”	Single, 9”
	Proportioning Valve Type			Dual P Valve*10	Dual P Valve*10	Dual P Valve*10	Dual P Valve*10
	Suspension Type	Front		MacPherson Strut	MacPherson Strut	MacPherson Strut	MacPherson Strut
		Rear		Double Wishbone	Double Wishbone	Double Wishbone	Double Wishbone
	Stabilizer Bar	Front		Standard	Standard	Standard	Standard
		Rear		Standard	Standard	Standard	Standard
	Steering Gear Type			Rack and Pinion	Rack and Pinion	Rack and Pinion	Rack and Pinion
	Steering Gear Ratio (Overall)			16.4	16.4	16.4	16.4
	Power Steering Type			Integral Type	Integral Type	Integral Type	Integral Type

*1: With Half Type Cover Spare Tire (215/70R16, Steel Wheel), 215/70R16 (Alminium Wheel) + 5 mm (0.2 in.), 235/60R16 (Alminium Wheel) + 15 mm (0.6 in.) With Hard Cover for Spare Tire, All Tire Size + 45 mm (1.8 in.)
*2: With Overfender + 50 mm (2.0 in.)
*3: With Roof Rail (215/70R16) + 15 mm (0.6 in.)
*4: Model with 235/60R16 and Roof Rail + 5 mm (0.2 in.), without Roof Rail – 10 mm (0.4 in.)
*5: Model with 235/60R16 + 20 mm (0.8 in.)
*6: Model with 235/60R16 + 25 mm (1.0 in.)
*7: With Moon Roof (3 Door) – 50 mm (2.0 in.), (5 door) – 45 mm (1.8 in.)

Europe		Australia			
5-Door Wagon		3-Door Wagon		5-Door Wagon	
Standard					
CLA21R-AWMNYW	CLA21L-AWMNYW	ACA22R-AZMNKQ	ACA22R-AZPNKQ	ACA23R-AWMNKQ	ACA23R-AWPNKQ
4200 (165.4)*1	4200 (165.4)*1	4195 (165.2)*1	4195 (165.2)*1	4195 (165.2)*1	4195 (165.2)*1
1735 (68.3)*2	1735 (68.3)*2	1735 (68.3)*2	1735 (68.3)*2	1735 (68.3)*2	1735 (68.3)*2
1690 (66.5)*3, *4	1670 (65.7)*3, *4	1665 (66.5)*3, *4	1665 (66.5)*3, *4	1680 (66.1)*3, *4	1680 (66.1)*3, *4
2490 (98.0)	2490 (98.0)	2280 (89.8)	2280 (89.8)	2490 (98.0)	2490 (98.0)
1505 (59.3)*5	1505 (59.3)*5	1505 (59.3)*5	1505 (59.3)*5	1505 (59.3)*5	1505 (59.3)*5
1495 (58.9)*6	1495 (58.9)*6	1495 (58.9)*6	1495 (58.9)*6	1495 (58.9)*6	1495 (58.9)*6
1735 (68.3)	1735 (68.3)	1735 (68.3)	1735 (68.3)	1735 (68.3)	1735 (68.3)
1465 (57.7)	1465 (57.7)	1465 (57.7)	1465 (57.7)	1465 (57.7)	1465 (57.7)
1230 (48.4)*7	1230 (48.4)*7	1220 (48.0)*7	1220 (48.0)*7	1230 (48.4)*7	1230 (48.4)*7
760 (29.9)	760 (29.9)	760 (29.9)	760 (29.9)	760 (29.9)	760 (29.9)
950 (37.4)*1	950 (37.4)*1	765 (30.1)*1	765 (30.1)*1	945 (37.2)*1	945 (37.2)*1
205 (8.1)*8	205 (8.1)*8	190 (7.5)*8	190 (7.5)*8	190 (7.5)*8	190 (7.5)*8
31°*9	31°*9	31°*9	31°*9	31°*9	31°*9
31°*9	31°*9	44°*9	44°*9	31°*9	31°*9
805 (1775) - 870 (1918)	805 (1775) - 870 (1918)	715 (1576) - 765 (1687)	750 (1653) - 800 (1764)	740 (1631) - 785 (1731)	775 (1709) - 820 (1808)
565 (1246) - 620 (1367)	565 (1246) - 620 (1367)	535 (1179) - 575 (1268)	535 (1179) - 575 (1268)	570 (1257) - 625 (1378)	570 (1257) - 625 (1378)
1370 (3020) - 1490 (3285)	1370 (3020) - 1490 (3285)	1250 (2756) - 1340 (2954)	1285 (2833) - 1375 (3031)	1310 (2888) - 1410 (3109)	1345 (2965) - 1445 (3186)
1010 (2227)	1010 (2227)	885 (1951)	885 (1951)	930 (2050)	930 (2050)
920 (2028)	920 (2028)	840 (1852)	840 (1852)	945 (2083)	945 (2083)
1930 (4255)	1930 (4255)	1725 (3803)	1725 (3803)	1875 (4134)	1875 (4134)
57 (12.76)	57 (12.76)	57 (12.76)	57 (12.76)	57 (12.76)	57 (12.76)
0.40 (14.12)	0.40 (14.12)	0.15 (5.30)	0.15 (5.30)	0.40 (14.12)	0.40 (14.12)
—	—	190 (118)	190 (118)	190 (118)	190 (118)
—	—	145 (90)	145 (90)	145 (90)	145 (90)
—	—	—	—	—	—
—	—	—	—	—	—
41 (25), 40 (25)*11	41 (25), 40 (25)*11	—	63 (39)	—	63 (39)
77 (48), 75 (47)*11	77 (48), 75 (47)*11	—	113 (70)	—	113 (70)
117 (73), 115 (71)*11	117 (73), 115 (71)*11	—	—	—	—
161 (100), 157 (98)*11	161 (100), 157 (98)*11	—	—	—	—
5.3 (17.39)	5.3 (17.39)	5.0 (16.41)	5.0 (16.41)	5.3 (17.39)	5.3 (17.39)
5.6 (18.37)	5.6 (18.37)	5.3 (17.39)	5.3 (17.39)	5.6 (18.37)	5.6 (18.37)
1CD-FTV	1CD-FTV	2AZ-FE	2AZ-FE	2AZ-FE	2AZ-FE
16-Valve, DOHC	16-Valve, DOHC	16-Valve, DOHC, Chain Drive	16-Valve, DOHC, Chain Drive	16-Valve, DOHC, Chain Drive	16-Valve, DOHC, Chain Drive
82.2 x 94.0 (3.24 x 3.7)	82.2 x 94.0 (3.24 x 3.7)	88.5 x 96.0 (3.48 x 3.78)	88.5 x 96.0 (3.48 x 3.78)	88.5 x 96.0 (3.48 x 3.78)	88.5 x 96.0 (3.48 x 3.78)
1995 (121.7)	1995 (121.7)	2362 (144.2)	2362 (144.2)	2362 (144.2)	2362 (144.2)
18.6 : 1	18.6 : 1	9.6 : 1	9.6 : 1	9.6 : 1	9.6 : 1
Common-Rail Type	Common-Rail Type	EFI	EFI	EFI	EFI
48 or higher	48 or higher	91 or higher	91 or higher	91 or higher	91 or higher
85 / 4000 (EEC)	85 / 4000 (EEC)	120 / 5700 (SAE-NET)	120 / 5700 (SAE-NET)	120 / 5700 (SAE-NET)	120 / 5700 (SAE-NET)
250 / 1800 – 3000 (EEC)	250 / 1800 – 3000 (EEC)	224 / 4000 (SAE-NET)	224 / 4000 (SAE-NET)	224 / 4000 (SAE-NET)	224 / 4000 (SAE-NET)
12-55	12-55	12-27	12-36	12-27	12-36
1560	1560	1080	1200	1080	1200
1.4, 2.2*13	1.4, 2.2*13	1.2	1.2	1.2	1.2
Dry, Single Plate, Diaphragm	Dry, Single Plate, Diaphragm	Dry, Single Plate, Diaphragm	—	Dry, Single Plate, Diaphragm	—
E353F	E353F	E359F	U140F	E359F	U140F
3.833	3.833	3.833	3.938	3.833	3.938
2.045	2.045	1.913	2.194	1.913	2.194
1.333	1.333	1.258	1.411	1.258	1.411
0.972	0.972	0.972	1.019	0.972	1.019
0.731	0.731	0.775	—	0.775	—
3.583	3.583	3.583	3.141	3.583	3.141
—	—	—	1.019	—	1.019
4.235	4.235	4.562	3.080	4.562	3.080
2.928	2.928	2.928	2.928	2.928	2.928
6.7”	6.7”	6.7”	6.7”	6.7”	6.7”
Ventilated Disc	Ventilated Disc	Ventilated Disc	Ventilated Disc	Ventilated Disc	Ventilated Disc
Leading-Trailing Drum / Solid Disc*12	Leading-Trailing Drum / Solid Disc*12	Solid Disc	Solid Disc	Solid Disc	Solid Disc
Leading-Trailing Drum / Duo-Servo Drum*12	Leading-Trailing Drum / Duo-Servo Drum*12	Duo-Servo Drum	Duo-Servo Drum	Duo-Servo Drum	Duo-Servo Drum
Single, 9”	Single, 9”	Single, 10”	Single, 10”	Single, 10”	Single, 10”
Dual P Valve*10	Dual P Valve*10	Dual P Valve*10	Dual P Valve*10	Dual P Valve*10	Dual P Valve*10
MacPherson Strut	MacPherson Strut	MacPherson Strut	MacPherson Strut	MacPherson Strut	MacPherson Strut
Double Wishbone	Double Wishbone	Double Wishbone	Double Wishbone	Double Wishbone	Double Wishbone
Standard	Standard	Standard	Standard	Standard	Standard
Standard	Standard	Standard	Standard	Standard	Standard
Rack and Pinion	Rack and Pinion	Rack and Pinion	Rack and Pinion	Rack and Pinion	Rack and Pinion
16.4	16.4	16.4	16.4	16.4	16.4
Integral Type	Integral Type	Integral Type	Integral Type	Integral Type	Integral Type

*8: Model with 235 / 60R16 – 10 mm (0.4 in.)
*9: Model with 235 / 60R16 – 1 degree
*10: Without ABS
*11: With 235 / 60R16 Tire
*12: Option
*13: Cold Area Specification Model

Item \ Area				G.C.C. Countries			General Countries
Body Type				5-Door Wagon			
Vehicle Grade				Standard			
Model Code				ACA20L-AWPNKV	ACA21L-AWMNKV	ACA21L-AWPNKV	ACA21R-AWMNK
Major Dimensions & Vehicle Weights	Overall	Length	mm (in.)	3800 (149.6)*1	4195 (165.2)*1	4195 (165.2)*1	4195 (165.2)*1
		Width	mm (in.)	1735 (68.3)*2	1735 (68.3)*2	1735 (68.3)*2	1735 (68.3)*2
		Height	mm (in.)	1680 (66.1)*3, *4	1680 (66.1)*3, *4	1680 (66.1)*3, *4	1680 (66.1)*3, *4
	Wheel Base		mm (in.)	2280 (89.8)	2490 (98.0)	2490 (98.0)	2490 (98.0)
	Tread	Front	mm (in.)	1505 (59.3)*5	1505 (59.3)*5	1505 (59.3)*5	1505 (59.3)*5
		Rear	mm (in.)	1495 (58.9)*6	1495 (58.9)*6	1495 (58.9)*6	1495 (58.9)*6
	Room	Length	mm (in.)	1735 (68.3)	1735 (68.3)	1735 (68.3)	1735 (68.3)
		Width	mm (in.)	1465 (57.7)	1465 (57.7)	1465 (57.7)	1465 (57.7)
		Height	mm (in.)	1220 (48.0)*7	1220 (48.0)*7	1220 (48.0)*7	1230 (48.4)*7
	Overhang	Front	mm (in.)	760 (29.9)	760 (29.9)	760 (29.9)	760 (29.9)
		Rear	mm (in.)	765 (30.1)*1	945 (37.2)*1	945 (37.2)*1	945 (37.2)*1
	Min. Running Ground Clearance		mm (in.)	205 (8.1)*8	190 (7.5)*8	190 (7.5)*8	190 (7.5)*8
	Angle of Approach		degrees	31°*9	31°*9	31°*9	31°*9
	Angle of Departure		degrees	44°*9	44°*9	44°*9	44°*9
	Curb Weight	Front	kg (lb)	685 (1510) - 750 (1653)	710 (1565) - 765 (1687)	745 (1642) - 800 (1764)	710 (1565) - 765 (1687)
		Rear	kg (lb)	525 (1157) - 575 (1268)	560 (1235) - 615 (1356)	560 (1235) - 615 (1356)	560 (1235) - 615 (1356)
		Total	kg (lb)	1210 (2689) - 1325 (2921)	1270 (2800) - 1380 (3042)	1305 (2877) - 1415 (3120)	1270 (2800) - 1380 (3042)
	Gross Vehicle Weight	Front	kg (lb)	865 (1907)	910 (2006)	910 (2006)	910 (2006)
		Rear	kg (lb)	820 (1808)	915 (2017)	915 (2017)	915 (2017)
		Total	kg (lb)	1685 (3715)	1825 (4023)	1825 (4023)	1825 (4023)
	Fuel Tank Capacity		ℓ (Imp.gal.)	57 (12.76)	57 (12.76)	57 (12.76)	57 (12.76)
	Luggage Compartment Capacity		m³ (cu.ft.)	0.15 (5.30)	0.40 (14.12)	0.40 (14.12)	0.40 (14.12)
Performance	Max. Speed		km/h (mph)	—	—	—	—
	Max. Cruising Speed		km/h (mph)	—	—	—	—
	Acceleration	0 to 100 km/h	sec.	—	—	—	—
		0 to 400 m	sec.	—	—	—	—
	Max. Permissible Speed	1st Gear	km/h (mph)	63 (39)	—	63 (39)	—
		2nd Gear	km/h (mph)	113 (70)	—	113 (70)	—
		3rd Gear	km/h (mph)	—	—	—	—
		4th Gear	km/h (mph)	—	—	—	—
	Min. Turning Radius	Tire	m (ft.)	5.0 (16.41)	5.0 (16.41)	5.3 (17.39)	5.3 (17.39)
		Body	m (ft.)	5.3 (17.39)	5.3 (17.39)	5.6 (18.37)	5.6 (18.37)
Engine	Engine Type			1AZ-FE	1AZ-FE	1AZ-FE	1AZ-FE
	Valve Mechanism			16-Valve, DOHC, Chain Drive	16-Valve, DOHC, Chain Drive	16-Valve, DOHC, Chain Drive	16-Valve, DOHC, Chain Drive
	Bore x Stroke		mm (in.)	86.0 x 86.0 (3.39 x 3.39)	86.0 x 86.0 (3.39 x 3.39)	86.0 x 86.0 (3.39 x 3.39)	86.0 x 86.0 (3.39 x 3.39)
	Displacement		cm³ (cu.in.)	1998 (121.9)	1998 (121.9)	1998 (121.9)	1998 (121.9)
	Compression Ratio			9.8 : 1	9.8 : 1	9.8 : 1	9.5 : 1
	Fuel System			EFI	EFI	EFI	EFI
	Research Octane No. or Cetane No. (Diesel)			91 or higher	91 or higher	91 or higher	91 or higher
	Max. Output		kW/rpm	110/5600 (SAE-NET)	100/5600 (SAE-NET)	110/5600 (SAE-NET)	102/5600 (SAE-NET)
	Max. Torque		N·m/rpm	192/4000 (SAE-NET)	192/4000 (SAE-NET)	192/4000 (SAE-NET)	190/4000 (SAE-NET)
Engine Electrical	Battery Capacity (5HR)		Voltage & Amp. hr.	12-36	12-27	12-36	12-27
	Alternator Output		Watts	1200	1080	1200	1080
	Starter Output		kW	1.2	1.2	1.2	1.2
Chassis	Clutch Type			—	Dry, Single Plate, Diaphragm	—	Dry, Single Plate, Diaphragm
	Transmission Type			U140F	E352F	U140F	E352F
	Transmission Gear Ratio	In First		3.938	3.833	3.938	3.833
		In Second		2.194	2.045	2.194	2.045
		In Third		1.411	1.333	1.411	1.333
		In Fourth		1.019	1.028	1.019	1.028
		In Fifth		—	0.820	—	0.820
		In Reverse		3.141	3.583	3.141	3.583
	Counter Gear Ratio			1.019	—	1.019	—
	Differential Gear Ratio (Final)			3.291	4.562	3.291	4.562
	Transfer and Rear Differential Gear Ratio			2.928	2.928	2.928	2.928
	Rear Differential Gear Size		in.	6.7”	6.7”	6.7”	6.7”
	Brake Type	Front		Ventilated Disc	Ventilated Disc	Ventilated Disc	Ventilated Disc
		Rear		Leading-Trailing Drum / Solid Disc*12	Leading-Trailing Drum / Solid Disc*12	Leading-Trailing Drum / Solid Disc*12	Leading-Trailing Drum / Solid Disc*12
	Parking Brake Type			Leading-Trailing Drum / Duo-Servo Drum*12	Leading-Trailing Drum / Duo-Servo Drum*12	Leading-Trailing Drum / Duo-Servo Drum*12	Leading-Trailing Drum / Duo-Servo Drum*12
	Brake Booster Type and Size		in.	Single, 10”	Single, 10”	Single, 10”	Single, 10”
	Proportioning Valve Type			Dual P Valve*10	Dual P Valve*10	Dual P Valve*10	Dual P Valve*10
	Suspension Type	Front		MacPherson Strut	MacPherson Strut	MacPherson Strut	MacPherson Strut
		Rear		Double Wishbone	Double Wishbone	Double Wishbone	Double Wishbone
	Stabilizer Bar	Front		Standard	Standard	Standard	Standard
		Rear		Standard	Standard	Standard	Standard
	Steering Gear Type			Rack and Pinion	Rack and Pinion	Rack and Pinion	Rack and Pinion
	Steering Gear Ratio (Overall)			16.4	16.4	16.4	16.4
	Power Steering Type			Integral Type	Integral Type	Integral Type	Integral Type

*1: With Half Type Cover Spare Tire (215/70R16, Steel Wheel), 215/70R16 (Alminium Wheel) + 5 mm (0.2 in.), 235/60R16 (Alminium Wheel) + 15 mm (0.6 in.)
With Hard Cover for Spare Tire, All Tire Size + 45 mm (1.8 in.)
*2: With Overfender + 50 mm (2.0 in.)
*3: With Roof Rail (215/70R16) + 15 mm (0.6 in.)
*4: Model with 235/60R16 and Roof Rail + 5 mm (0.2 in.), without Roof Rail – 10 mm (0.4 in.)
*5: Model with 235/60R16 + 20 mm (0.8 in.)
*6: Model with 235/60R16 + 25 mm (1.0 in.)
*7: With Moon Roof (3 Door) – 50 mm (2.0 in.), (5 door) – 45 mm (1.8 in.)

General Countries		
5-Door Wagon		
Standard		
ACA21R-AWPNK	ACA21L-AWMNK	ACA21L-AWPNK
4195 (165.2)*1	4195 (165.2)*1	4195 (165.2)*1
1735 (68.3)*2	1735 (68.3)*2	1735 (68.3)*2
1680 (66.1)*3, *4	1680 (66.1)*3, *4	1680 (66.1)*3, *4
2490 (98.0)	2490 (98.0)	2490 (98.0)
1505 (59.3)*5	1505 (59.3)*5	1505 (59.3)*5
1495 (58.9)*6	1495 (58.9)*6	1495 (58.9)*6
1735 (68.3)	1735 (68.3)	1735 (68.3)
1465 (57.7)	1465 (57.7)	1465 (57.7)
1230 (48.4)*7	1230 (48.4)*7	1230 (48.4)*7
760 (29.9)	760 (29.9)	760 (29.9)
945 (37.2)*1	945 (37.2)*1	945 (37.2)*1
190 (7.5)*8	190 (7.5)*8	190 (7.5)*8
31°*9	31°*9	31°*9
44°*9	44°*9	44°*9
745 (1642) - 800 (1764)	710 (1565) - 765 (1687)	745 (1642) - 800 (1764)
560 (1235) - 615 (1356)	560 (1235) - 615 (1356)	560 (1235) - 615 (1356)
1305 (2877) - 1415 (3120)	1270 (2800) - 1380 (3042)	1305 (2877) - 1415 (3120)
910 (2006)	910 (2006)	910 (2006)
915 (2017)	915 (2017)	915 (2017)
1825 (4023	1825 (4023)	1825 (4023)
57 (12.76)	57 (12.76)	57 (12.76)
0.40 (14.12)	0.40 (14.12)	0.40 (14.12)
—	—	—
—	—	—
—	—	—
—	—	—
63 (39)	—	63 (39)
113 (70)	—	113 (70)
—	—	—
—	—	—
5.6 (17.39)	5.3 (17.39)	5.6 (17.39)
5.6 (18.37)	5.6 (18.37)	5.6 (18.37)
1AZ-FE	1AZ-FE	1AZ-FE
16-Valve, DOHC, Chain Drive	16-Valve, DOHC, Chain Drive	16-Valve, DOHC, Chain Drive
86.0 x 86.0 (3.39 x 3.39)	86.0 x 86.0 (3.39 x 3.39)	86.0 x 86.0 (3.39 x 3.39)
1998 (121.9)	1998 (121.9)	1998 (121.9)
9.5 : 1	9.5 : 1	9.5 : 1
EFI	EFI	EFI
90 or higher	90 or higher	90 or higher
102 / 5600 (SAE-NET)	102 / 5600 (SAE-NET)	102 / 5600 (SAE-NET)
190 / 4000 (SAE-NET)	190 / 4000 (SAE-NET)	190 / 4000 (SAE-NET)
12-36	12-27	12-36
1200	1080	1200
1.2	1.2	1.2
—	Dry, Single Plate, Diaphragm	—
U140F	E352F	U140F
3.938	3.833	3.938
2.194	2.045	2.194
1.411	1.333	1.411
1.019	1.028	1.019
—	0.820	—
3.141	3.583	3.141
1.019	—	1.019
3.291	4.562	3.291
2.928	2.928	2.928
6.7”	6.7”	6.7”
Ventilated Disc	Ventilated Disc	Ventilated Disc
Leading-Trailing Drum / Solid Disc*12	Leading-Trailing Drum / Solid Disc*12	Leading-Trailing Drum / Solid Disc*12
Leading-Trailing Drum / Duo-Servo Drum*12	Leading-Trailing Drum / Duo-Servo Drum*12	Leading-Trailing Drum / Duo-Servo Drum*12
Single, 10”	Single, 10”	Single, 10”
Dual P Valve*10	Dual P Valve*10	Dual P Valve*10
MacPherson Strut	MacPherson Strut	MacPherson Strut
Double Wishbone	Double Wishbone	Double Wishbone
Standard	Standard	Standard
Stabdard	Standard	Standard
Rack and Pinion	Rack and Pinion	Rack and Pinion
16.4	16.4	16.4
Integral Type	Integral Type	Integral Type

*8: Model with 235 / 60R16 – 10 mm (0.4 in.)
*9: Model with 235 / 60R16 – 1 degree
*10: Without ABS
*11: With 235 / 60R16 Tire
*12: Option
*13: Cold Area Specification Model

– MEMO –

MAJOR TECHNICAL SPECIFICATIONS

Item \ Area				EUROPE			
Body Type				4-Door Sedan			
Vehicle Grade				ENTRY		MID TECHNICAL	MID ELEGANT
Model Code				ZZT250R-AEMNKW	ZZT250L-AEMNKW	ZZT250L-AEMEKW	ZZT250L-AEMGKW
Major Dimensions & Vehicle Weights	Overall	Length	mm (in.)	4630 (182.3)	4630 (182.3)	4630 (182.3)	4630 (182.3)
		Width	mm (in.)	1760 (69.3)	1760 (69.3)	1760 (69.3)	1760 (69.3)
		Height	mm (in.)	1480 (58.3)	1480 (58.3)	1480 (58.3)	1480 (58.3)
	Wheel Base		mm (in.)	2700 (106.3)	2700 (106.3)	2700 (106.3)	2700 (106.3)
	Tread	Front	mm (in.)	1506 (59.3)	1506 (59.3)	1506 (59.3)	1506 (59.3)
		Rear	mm (in.)	1510 (59.4)	1510 (59.4)	1510 (59.4)	1510 (59.4)
	Room	Length	mm (in.)	2090 (82.3)	2090 (82.3)	2090 (82.3)	2090 (82.3)
		Width	mm (in.)	1485 (58.5)	1485 (58.5)	1485 (58.5)	1485 (58.5)
		Height	mm (in.)	1210 (47.6), 1160 (45.7)*1	1210 (47.6), 1160 (45.7)*1	1210 (47.6), 1160 (45.7)*1	1210 (47.6), 1160 (45.7)*1
	Overhang	Front	mm (in.)	910 (35.8)	910 (35.8)	910 (35.8)	910 (35.8)
		Rear	mm (in.)	1025 (40.4)	1025 (40.4)	1025 (40.4)	1025 (40.4)
	Min. Running Ground Clearance		mm (in.)	135 (5.3), 155 (6.1)*2	135 (5.3), 155 (6.1)*2	135 (5.3), 155 (6.1)*2	135 (5.3), 155 (6.1)*2
	Angle of Approach		degrees	13.1°, 14.5°*2	13.1°, 14.5°*2	13.1°, 14.5°*2	13.1°, 14.5°*2
	Angle of Departure		degrees	18.7°, 20.1°*2	18.7°, 20.1°*2	18.7°, 20.1°*2	18.7°, 20.1°*2
	Curb Weight	Front	kg (lb)	710 - 750 (1565 - 1653)	710 - 750 (1565 - 1653)	720 - 750 (1587 - 1653)	720 - 750 (1587 - 1653)
		Rear	kg (lb)	535 - 560 (1179 - 1235)	535 - 560 (1179 - 1235)	550 - 570 (1213 - 1257)	550 - 570 (1213 - 1257)
		Total	kg (lb)	1245 -1310 (2744 - 2888)	1245 -1310 (2744 - 2888)	1270 - 1320 (2800 - 2910)	1270 - 1320 (2800 - 2910)
	Gross Vehicle Weight	Front	kg (lb)	840 (1852)	840 (1852)	840 (1852)	840 (1852)
		Rear	kg (lb)	980 (2161)	980 (2161)	980 (2161)	980 (2161)
		Total	kg (lb)	1820 (4013)	1820 (4013)	1820 (4013)	1820 (4013)
	Fuel Tank Capacity		L (Imp.gal.)	60 (13.2)	60 (13.2)	60 (13.2)	60 (13.2)
	Luggage Compartment Capacity		m^3 (cu.ft.)	0.520 (18.4)	0.520 (18.4)	0.520 (18.4)	0.520 (18.4)
Performance	Max. Speed		km/h (mph)	195 (121)	195 (121)	195 (121)	195 (121)
	Max. Cruising Speed		km/h (mph)	—	—	—	—
	Acceleration	0 to 100 km/h	sec.	12.0	12.0	12.0	12.0
		0 to 400 m	sec.	18.1	18.1	18.1	18.1
	Max. Permissible Speed	1st Gear	km/h (mph)	47 (29)	47 (29)	47 (29)	47 (29)
		2nd Gear	km/h (mph)	87 (54)	87 (54)	87 (54)	87 (54)
		3rd Gear	km/h (mph)	127 (78)	127 (78)	127 (78)	127 (78)
		4th Gear	km/h (mph)	172 (106)	172 (106)	172 (106)	172 (106)
	Min. Turning Radius	Tire	m (ft.)	5.4 (17.7)	5.4 (17.7)	5.4 (17.7)	5.4 (17.7)
		Body	m (ft.)	5.75 (18.9)	5.75 (18.9)	5.75 (18.9)	5.75 (18.9)
Engine	Engine Type			3ZZ-FE	3ZZ-FE	3ZZ-FE	3ZZ-FE
	Valve Mechanism			16-Valve, DOHC	16-Valve, DOHC	16-Valve, DOHC	16-Valve, DOHC
	Bore × Stroke		mm (in.)	79.0 × 81.5 (3.11 × 3.21)	79.0 × 81.5 (3.11 × 3.21)	79.0 × 81.5 (3.11 × 3.21)	79.0 × 81.5 (3.11 × 3.21)
	Displacement		cm^3 (cu.in.)	1598 (97.5)	1598 (97.5)	1598 (97.5)	1598 (97.5)
	Compression Ratio			10.5	10.5	10.5	10.5
	Fuel System			EFI	EFI	EFI	EFI
	Research Octane No. or Cetane No. (Diesel)			95 or higher	95 or higher	95 or higher	95 or higher
	Max. Output (EEC)		kW/rpm	81/6000	81/6000	81/6000	81/6000
	Max. Torque (EEC)		N·m/rpm	150/3800	150/3800	150/3800	150/3800
Engine Electrical	Battery Capacity (5HR)		Voltage & Amp. hr.	12 -32, 48*3	12 -32, 48*3	12 -32, 48*3	12 -32, 48*3
	Alternator Output		Watts	1080	1080	1080	1080
	Starter Output		kW	1.3	1.3	1.3	1.3
Chassis	Clutch Type			Dry, Single Plate	Dry, Single Plate	Dry, Single Plate	Dry, Single Plate
	Transaxle Type			C50	C50	C50	C50
	Transmission Gear Ratio*4	In First		3.545	3.545	3.545	3.545
		In Second		1.904	1.904	1.904	1.904
		In Third		1.310	1.310	1.310	1.310
		In Fourth		0.969	0.969	0.969	0.969
		In Fifth		0.815	0.815	0.815	0.815
		In Reverse		3.250	3.250	3.250	3.250
	Differential Gear Ratio (Final)			4.312	4.312	4.312	4.312
	Brake Type	Front		Ventilated Disc	Ventilated Disc	Ventilated Disc	Ventilated Disc
		Rear		Solid Disc	Solid Disc	Solid Disc	Solid Disc
	Parking Brake Type			Drum	Drum	Drum	Drum
	Brake Booster Type and Size		in.	Tandem 8"+ 9"	Tandem 8"+ 9"	Tandem 8"+ 9"	Tandem 8"+ 9"
	Proportioning Valve Type			—	—	—	—
	Suspension Type	Front		MacPherson Strut	MacPherson Strut	MacPherson Strut	MacPherson Strut
		Rear		Double Wishbone	Double Wishbone	Double Wishbone	Double Wishbone
	Stabilizer Bar	Front		Standard	Standard	Standard	Standard
		Rear		Standard	Standard	Standard	Standard
	Steering Gear Type			Rack and Pinion	Rack and Pinion	Rack and Pinion	Rack and Pinion
	Steering Gear Ratio (Overall)			17.5, 17.3*2	17.5, 17.3*2	17.5, 17.3*2	17.5, 17.3*2
	Power Steering Type			EPS	EPS	EPS	EPS

*1: With Sun Roof
*2: Rough Road Pack
*3: Option
*4: Counter Gear Ratio Included (Only for Models with Automatic Transaxle)

EUROPE					
4-Door Sedan					
ENTRY				MID TECHNICAL	
ZZT251R-AEMNKW	ZZT251L-AEMNKW	ZZT251R-AEPNKW	ZZT251L-AEPNKW	ZZT251R-AEMEKW	ZZT251L-AEMEKW
4630 (182.3)	4630 (182.3)	4630 (182.3)	4630 (182.3)	4630 (182.3)	4630 (182.3)
1760 (69.3)	1760 (69.3)	1760 (69.3)	1760 (69.3)	1760 (69.3)	1760 (69.3)
1480 (58.3)	1480 (58.3)	1480 (58.3)	1480 (58.3)	1480 (58.3)	1480 (58.3)
2700 (106.3)	2700 (106.3)	2700 (106.3)	2700 (106.3)	2700 (106.3)	2700 (106.3)
1506 (59.3)	1506 (59.3)	1506 (59.3)	1506 (59.3)	1506 (59.3)	1506 (59.3)
1510 (59.4)	1510 (59.4)	1510 (59.4)	1510 (59.4)	1510 (59.4)	1510 (59.4)
2090 (82.3)	2090 (82.3)	2090 (82.3)	2090 (82.3)	2090 (82.3)	2090 (82.3)
1485 (58.5)	1485 (58.5)	1485 (58.5)	1485 (58.5)	1485 (58.5)	1485 (58.5)
1210 (47.6), 1160 (45.7)*1	1210 (47.6), 1160 (45.7)*1	1210 (47.6), 1160 (45.7)*1	1210 (47.6), 1160 (45.7)*1	1210 (47.6), 1160 (45.7)*1	1210 (47.6), 1160 (45.7)*1
910 (35.8)	910 (35.8)	910 (35.8)	910 (35.8)	910 (35.8)	910 (35.8)
1025 (40.4)	1025 (40.4)	1025 (40.4)	1025 (40.4)	1025 (40.4)	1025 (40.4)
135 (5.3), 155 (6.1)*2	135 (5.3), 155 (6.1)*2	135 (5.3), 155 (6.1)*2	135 (5.3), 155 (6.1)*2	135 (5.3), 155 (6.1)*2	135 (5.3), 155 (6.1)*2
13.1°, 14.5°*2	13.1°, 14.5°*2	13.1°, 14.5°*2	13.1°, 14.5°*2	13.1°, 14.5°*2	13.1°, 14.5°*2
18.7°, 20.1°*2	18.7°, 20.1°*2	18.7°, 20.1°*2	18.7°, 20.1°*2	18.7°, 20.1°*2	18.7°, 20.1°*2
710 - 750 (1565 - 1653)	710 - 750 (1565 - 1653)	730 - 770 (1609 - 1698)	730 - 770 (1609 - 1698)	720 - 750 (1587 - 1653)	720 - 750 (1587 - 1653)
535 - 560 (1179 - 1235)	535 - 560 (1179 - 1235)	535 - 560 (1179 - 1235)	535 - 560 (1179 - 1235)	550 - 570 (1213 - 1257)	550 - 570 (1213 - 1257)
1245 - 1310 (2744 -2888)	1245 - 1310 (2744 -2888)	1265 - 1330 (2788 - 2933)	1265 - 1330 (2788 - 2933)	1270 - 1320 (2800 - 2910)	1270 - 1320 (2800 - 2910)
840 (1852)	840 (1852)	840 (1852)	840 (1852)	840 (1852)	840 (1852)
980 (2161)	980 (2161)	980 (2161)	980 (2161)	980 (2161)	980 (2161)
1820 (4013)	1820 (4013)	1820 (4013)	1820 (4013)	1820 (4013)	1820 (4013)
60 (13.2)	60 (13.2)	60 (13.2)	60 (13.2)	60 (13.2)	60 (13.2)
0.520 (18.4)	0.520 (18.4)	0.520 (18.4)	0.520 (18.4)	0.520 (18.4)	0.520 (18.4)
200 (124)	200 (124)	195 (121)	195 (121)	200 (124)	200 (124)
—	—	—	—	—	—
10.3	10.3	11.6	11.6	10.3	10.3
17.1	17.1	17.9	17.9	17.1	17.1
51 (31)	51 (31)	59 (36)	59 (36)	51 (31)	51 (31)
95 (59)	95 (59)	109 (67)	109 (67)	95 (59)	95 (59)
139 (86)	139 (86)	169 (105)	169 (105)	139 (86)	139 (86)
176 (109)	176 (109)	—	—	176 (109)	176 (109)
5.4 (17.7)	5.4 (17.7)	5.4 (17.7)	5.4 (17.7)	5.4 (17.7)	5.4 (17.7)
5.75 (18.9)	5.75 (18.9)	5.75 (18.9)	5.75 (18.9)	5.75 (18.9)	5.75 (18.9)
1ZZ-FE	1ZZ-FE	1ZZ-FE	1ZZ-FE	1ZZ-FE	1ZZ-FE
16-Valve, DOHC	16-Valve, DOHC	16-Valve, DOHC	16-Valve, DOHC	16-Valve, DOHC	16-Valve, DOHC
79.0 × 91.5 (3.11 × 3.60)	79.0 × 91.5 (3.11 × 3.60)	79.0 × 91.5 (3.11 × 3.60)	79.0 × 91.5 (3.11 × 3.60)	79.0 × 91.5 (3.11 × 3.60)	79.0 × 91.5 (3.11 × 3.60)
1794 (109.5)	1794 (109.5)	1794 (109.5)	1794 (109.5)	1794 (109.5)	1794 (109.5)
10.0	10.0	10.0	10.0	10.0	10.0
EFI	EFI	EFI	EFI	EFI	EFI
95 or higher	95 or higher	95 or higher	95 or higher	95 or higher	95 or higher
95/6000	95/6000	95/6000	95/6000	95/6000	95/6000
170/4200	170/4200	170/4200	170/4200	170/4200	170/4200
12 -32, 48*3	12 -32, 48*3	12 -32, 48*3	12 -32, 48*3	12 -32, 48*3	12 -32, 48*3
1080	1080	1080	1080	1080	1080
1.3	1.3	1.3	1.3	1.3	1.3
Dry, Single Plate	Dry, Single Plate	—	—	Dry, Single Plate	Dry, Single Plate
C250	C250	U341E	U341E	C250	C250
3.545	3.545	2.847	2.847	3.545	3.545
1.904	1.904	1.552	1.552	1.904	1.904
1.310	1.310	1.000	1.000	1.310	1.310
1.031	1.031	0.700	0.700	1.031	1.031
0.815	0.815	—	—	0.815	0.815
3.250	3.250	2.343	2.343	3.250	3.250
3.941	3.941	4.237	4.237	3.941	3.941
Ventilated Disc	Ventilated Disc	Ventilated Disc	Ventilated Disc	Ventilated Disc	Ventilated Disc
Solid Disc	Solid Disc	Solid Disc	Solid Disc	Solid Disc	Solid Disc
Drum	Drum	Drum	Drum	Drum	Drum
Tandem 8"+ 9"	Tandem 8"+ 9"	Tandem 8"+ 9"	Tandem 8"+ 9"	Tandem 8"+ 9"	Tandem 8"+ 9"
—	—	—	—	—	—
MacPherson Strut	MacPherson Strut	MacPherson Strut	MacPherson Strut	MacPherson Strut	MacPherson Strut
Double Wishbone	Double Wishbone	Double Wishbone	Double Wishbone	Double Wishbone	Double Wishbone
Standard	Standard	Standard	Standard	Standard	Standard
Standard	Standard	Standard	Standard	Standard	Standard
Rack and Pinion	Rack and Pinion	Rack and Pinion	Rack and Pinion	Rack and Pinion	Rack and Pinion
17.5, 17.3*2	17.5, 17.3*2	17.5, 17.3*2	17.5, 17.3*2	17.5, 17.3*2	17.5, 17.3*2
EPS	EPS	EPS	EPS	EPS	EPS

AP

Item \ Area				EUROPE			
Body Type				4-Door Sedan			
Vehicle Grade				MID TECHNICAL		MID ELEGANT	
Model Code				ZZT251R-AEPEKW	ZZT251L-AEPEKW	ZZT251R-AEMGKW	ZZT251L-AEMGKW
Major Dimensions & Vehicle Weights	Overall	Length	mm (in.)	4630 (182.3)	4630 (182.3)	4630 (182.3)	4630 (182.3)
		Width	mm (in.)	1760 (69.3)	1760 (69.3)	1760 (69.3)	1760 (69.3)
		Height	mm (in.)	1480 (58.3)	1480 (58.3)	1480 (58.3)	1480 (58.3)
	Wheel Base		mm (in.)	2700 (106.3)	2700 (106.3)	2700 (106.3)	2700 (106.3)
	Tread	Front	mm (in.)	1506 (59.3)	1506 (59.3)	1506 (59.3)	1506 (59.3)
		Rear	mm (in.)	1510 (59.4)	1510 (59.4)	1510 (59.4)	1510 (59.4)
	Room	Length	mm (in.)	2090 (82.3)	2090 (82.3)	2090 (82.3)	2090 (82.3)
		Width	mm (in.)	1485 (58.5)	1485 (58.5)	1485 (58.5)	1485 (58.5)
		Height	mm (in.)	1210 (47.6), 1160 (45.7)*1	1210 (47.6), 1160 (45.7)*1	1210 (47.6), 1160 (45.7)*1	1210 (47.6), 1160 (45.7)*1
	Overhang	Front	mm (in.)	910 (35.8)	910 (35.8)	910 (35.8)	910 (35.8)
		Rear	mm (in.)	1025 (40.4)	1025 (40.4)	1025 (40.4)	1025 (40.4)
	Min. Running Ground Clearance		mm (in.)	135 (5.3), 155 (6.1)*2	135 (5.3), 155 (6.1)*2	135 (5.3), 155 (6.1)*2	135 (5.3), 155 (6.1)*2
	Angle of Approach		degrees	13.1°, 14.5°*2	13.1°, 14.5°*2	13.1°, 14.5°*2	13.1°, 14.5°*2
	Angle of Departure		degrees	18.7°, 20.1°*2	18.7°, 20.1°*2	18.7°, 20.1°*2	18.7°, 20.1°*2
	Curb Weight	Front	kg (lb)	740 -770 (1631 - 1698)	740 -770 (1631 - 1698)	720 -750 (1587 - 1653)	720 -750 (1587 - 1653)
		Rear	kg (lb)	550 - 575 (1213 - 1268)	550 - 575 (1213 - 1268)	550 - 570 (1213 - 1257)	550 - 570 (1213 - 1257)
		Total	kg (lb)	1290 - 1345 (2844 - 2966)	1290 - 1345 (2844 - 2966)	1270 - 1320 (2800 - 2910)	1270 - 1320 (2800 - 2910)
	Gross Vehicle Weight	Front	kg (lb)	840 (1852)	840 (1852)	840 (1852)	840 (1852)
		Rear	kg (lb)	980 (2161)	980 (2161)	980 (2161)	980 (2161)
		Total	kg (lb)	1820 (4013)	1820 (4013)	1820 (4013)	1820 (4013)
	Fuel Tank Capacity		L (Imp.gal.)	60 (13.2)	60 (13.2)	60 (13.2)	60 (13.2)
	Luggage Compartment Capacity		m^3 (cu.ft.)	0.520 (18.4)	0.520 (18.4)	0.520 (18.4)	0.520 (18.4)
Performance	Max. Speed		km/h (mph)	195 (121)	195 (121)	200 (124)	200 (124)
	Max. Cruising Speed		km/h (mph)	—	—	—	—
	Acceleration	0 to 100 km/h	sec.	11.6	11.6	10.3	10.3
		0 to 400 m	sec.	17.9	17.9	17.1	17.1
	Max. Permissible Speed	1st Gear	km/h (mph)	59 (36)	59 (36)	51 (31)	51 (31)
		2nd Gear	km/h (mph)	109 (67)	109 (67)	95 (59)	95 (59)
		3rd Gear	km/h (mph)	169 (105)	169 (105)	139 (86)	139 (86)
		4th Gear	km/h (mph)	—	—	176 (109)	176 (109)
	Min. Turning Radius	Tire	m (ft.)	5.4 (17.7)	5.4 (17.7)	5.4 (17.7)	5.4 (17.7)
		Body	m (ft.)	5.75 (18.9)	5.75 (18.9)	5.75 (18.9)	5.75 (18.9)
Engine	Engine Type			1ZZ-FE	1ZZ-FE	1ZZ-FE	1ZZ-FE
	Valve Mechanism			16-Valve, DOHC	16-Valve, DOHC	16-Valve, DOHC	16-Valve, DOHC
	Bore × Stroke		mm (in.)	79.0 × 91.5 (3.11 × 3.60)	79.0 × 91.5 (3.11 × 3.60)	79.0 × 91.5 (3.11 × 3.60)	79.0 × 91.5 (3.11 × 3.60)
	Displacement		cm^3 (cu.in.)	1794 (109.5)	1794 (109.5)	1794 (109.5)	1794 (109.5)
	Compression Ratio			10.0	10.0	10.0	10.0
	Fuel System			EFI	EFI	EFI	EFI
	Research Octane No. or Cetane No. (Diesel)			95 or higher	95 or higher	95 or higher	95 or higher
	Max. Output (EEC)		kW/rpm	95/6000	95/6000	95/6000	95/6000
	Max. Torque (EEC)		N·m/rpm	170/4200	170/4200	170/4200	170/4200
Engine Electrical	Battery Capacity (5HR)		Voltage & Amp. hr.	12 -32, 48*3	12 -32, 48*3	12 -32, 48*3	12 -32, 48*3
	Alternator Output		Watts	1080	1080	1080	1080
	Starter Output		kW	1.3	1.3	1.3	1.3
Chassis	Clutch Type			—	—	Dry, Single Plate	Dry, Single Plate
	Transaxle Type			U341E	U341E	C250	C250
	Transmission Gear Ratio*4	In First		2.847	2.847	3.545	3.545
		In Second		1.552	1.552	1.904	1.904
		In Third		1.000	1.000	1.310	1.310
		In Fourth		0.700	0.700	1.031	1.031
		In Fifth		—	—	0.815	0.815
		In Reverse		2.343	2.343	3.250	3.250
	Differential Gear Ratio (Final)			4.237	4.237	3.941	3.941
	Brake Type	Front		Ventilated Disc	Ventilated Disc	Ventilated Disc	Ventilated Disc
		Rear		Solid Disc	Solid Disc	Solid Disc	Solid Disc
	Parking Brake Type			Drum	Drum	Drum	Drum
	Brake Booster Type and Size		in.	Tandem 8"+ 9"	Tandem 8"+ 9"	Tandem 8"+ 9"	Tandem 8"+ 9"
	Proportioning Valve Type			—	—	—	—
	Suspension Type	Front		MacPherson Strut	MacPherson Strut	MacPherson Strut	MacPherson Strut
		Rear		Double Wishbone	Double Wishbone	Double Wishbone	Double Wishbone
	Stabilizer Bar	Front		Standard	Standard	Standard	Standard
		Rear		Standard	Standard	Standard	Standard
	Steering Gear Type			Rack and Pinion	Rack and Pinion	Rack and Pinion	Rack and Pinion
	Steering Gear Ratio (Overall)			17.5, 17.3*2	17.5, 17.3*2	17.5, 17.3*2	17.5, 17.3*2
	Power Steering Type			EPS	EPS	EPS	EPS

*1: With Sun Roof
*2: Rough Road Pack
*3: Option
*4: Counter Gear Ratio Included (Only for Models with Automatic Transaxle)

EUROPE					
4-Door Sedan					
MID ELEGANT		MID TECHNICAL		MID ELEGANT	
ZZT251R-AEPGKW	ZZT251L-AEPGKW	AZT250L-AEMEKW	AZT250L-AEPEKW	AZT250L-AEMGKW	AZT250L-AEPGKW
4630 (182.3)	4630 (182.3)	4630 (182.3)	4630 (182.3)	4630 (182.3)	4630 (182.3)
1760 (69.3)	1760 (69.3)	1760 (69.3)	1760 (69.3)	1760 (69.3)	1760 (69.3)
1480 (58.3)	1480 (58.3)	1480 (58.3)	1480 (58.3)	1480 (58.3)	1480 (58.3)
2700 (106.3)	2700 (106.3)	2700 (106.3)	2700 (106.3)	2700 (106.3)	2700 (106.3)
1506 (59.3)	1506 (59.3)	1506 (59.3)	1506 (59.3)	1506 (59.3)	1506 (59.3)
1510 (59.4)	1510 (59.4)	1510 (59.4)	1510 (59.4)	1510 (59.4)	1510 (59.4)
2090 (82.3)	2090 (82.3)	2090 (82.3)	2090 (82.3)	2090 (82.3)	2090 (82.3)
1485 (58.5)	1485 (58.5)	1485 (58.5)	1485 (58.5)	1485 (58.5)	1485 (58.5)
1210 (47.6), 1160 (45.7)*1	1210 (47.6), 1160 (45.7)*1	1210 (47.6), 1160 (45.7)*1	1210 (47.6), 1160 (45.7)*1	1210 (47.6), 1160 (45.7)*1	1210 (47.6), 1160 (45.7)*1
910 (35.8)	910 (35.8)	910 (35.8)	910 (35.8)	910 (35.8)	910 (35.8)
1025 (40.4)	1025 (40.4)	1025 (40.4)	1025 (40.4)	1025 (40.4)	1025 (40.4)
135 (5.3), 155 (6.1)*2	135 (5.3), 155 (6.1)*2	135 (5.3), 155 (6.1)*2	135 (5.3), 155 (6.1)*2	135 (5.3), 155 (6.1)*2	135 (5.3), 155 (6.1)*2
13.1°, 14.5°*2	13.1°, 14.5°*2	13.1°, 14.5°*2	13.1°, 14.5°*2	13.1°, 14.5°*2	13.1°, 14.5°*2
18.7°, 20.1°*2	18.7°, 20.1°*2	18.7°, 20.1°*2	18.7°, 20.1°*2	18.7°, 20.1°*2	18.7°, 20.1°*2
740 -770 (1631 - 1698)	740 -770 (1631 - 1698)	765 - 800 (1687 - 1764)	795 - 830 (1753 - 1830)	765 - 800 (1687 - 1764)	795 - 830 (1753 - 1830)
550 - 575 (1213 - 1268)	550 - 575 (1213 - 1268)	540 - 555 (1190 - 1224)	540 -555 (1190 - 1224)	540 - 555 (1190 - 1224)	540 -555 (1190 - 1224)
1290 - 1345 (2844 - 2966)	1290 - 1345 (2844 - 2966)	1305 - 1355 (2877 - 2988)	1335 - 1385 (2943 - 3054)	1305 - 1355 (2877 - 2988)	1335 - 1385 (2943 - 3054)
840 (1852)	840 (1852)	915 (2017)	915 (2017)	915 (2017)	915 (2017)
980 (2161)	980 (2161)	975 (2150)	975 (2150)	975 (2150)	975 (2150)
1820 (4013)	1820 (4013)	1890 (4167)	1890 (4167)	1890 (4167)	1890 (4167)
60 (13.2)	60 (13.2)	60 (13.2)	60 (13.2)	60 (13.2)	60 (13.2)
0.520 (18.4)	0.520 (18.4)	0.520 (18.4)	0.520 (18.4)	0.520 (18.4)	0.520 (18.4)
195 (121)	195 (121)	200 (124)	190 (118)	200 (124)	190 (118)
—	—	—	—	—	—
11.6	11.6	9.5	11.1	9.5	11.1
17.9	17.9	16.7	17.6	16.7	17.6
59 (36)	59 (36)	51 (31)	62 (38)	51 (31)	62 (38)
109 (67)	109 (67)	88 (54)	111 (68)	88 (54)	111 (68)
169 (105)	169 (105)	136 (84)	174 (108)	136 (84)	174 (108)
—	—	177 (109)	—	177 (109)	—
5.4 (17.7)	5.4 (17.7)	5.6 (18.4)	5.6 (18.4)	5.6 (18.4)	5.6 (18.4)
5.75 (18.9)	5.75 (18.9)	5.995 (19.7)	5.995 (19.7)	5.995 (19.7)	5.995 (19.7)
1ZZ-FE	1ZZ-FE	1AZ-FE	1AZ-FE	1AZ-FE	1AZ-FE
16-Valve, DOHC	16-Valve, DOHC	16-Valve, DOHC	16-Valve, DOHC	16-Valve, DOHC	16-Valve, DOHC
79.0 × 91.5 (3.11 × 3.60)	79.0 × 91.5 (3.11 × 3.60)	86.0 × 86.0 (3.39 × 3.39)	86.0 × 86.0 (3.39 × 3.39)	86.0 × 86.0 (3.39 × 3.39)	86.0 × 86.0 (3.39 × 3.39)
1794 (109.5)	1794 (109.5)	1998 (121.9)	1998 (121.9)	1998 (121.9)	1998 (121.9)
10.0	10.0	9.8	9.8	9.8	9.8
EFI	EFI	EFI	EFI	EFI	EFI
95 or higher	95 or higher	95 or higher	95 or higher	95 or higher	95 or higher
95/6000	95/6000	108/6000	108/6000	108/6000	108/6000
170/4200	170/4200	192/4000	192/4000	192/4000	192/4000
12 -32, 48*3	12 -32, 48*3	12 -32, 48*3	12 -32, 48*3	12 -32, 48*3	12 -32, 48*3
1080	1080	1200	1200	1200	1200
1.3	1.3	1.3	1.3	1.3	1.3
—	—	Dry, Single Plate	—	Dry, Single Plate	—
U341E	U341E	E354	U241E	E354	U241E
2.847	2.847	3.538	3.943	3.538	3.943
1.552	1.552	2.054	2.197	2.054	2.197
1.000	1.000	1.333	1.413	1.333	1.413
0.700	0.700	1.028	1.020	1.028	1.020
—	—	0.820	—	0.820	—
2.343	2.343	3.583	3.145	3.583	3.145
4.237	4.237	3.944	2.923	3.944	2.923
Ventilated Disc	Ventilated Disc	Ventilated Disc	Ventilated Disc	Ventilated Disc	Ventilated Disc
Solid Disc	Solid Disc	Solid Disc	Solid Disc	Solid Disc	Solid Disc
Drum	Drum	Drum	Drum	Drum	Drum
Tandem 8"+ 9"	Tandem 8"+ 9"	Tandem 8"+ 9"	Tandem 8"+ 9"	Tandem 8"+ 9"	Tandem 8"+ 9"
—	—	—	—	—	—
MacPherson Strut	MacPherson Strut	MacPherson Strut	MacPherson Strut	MacPherson Strut	MacPherson Strut
Double Wishbone	Double Wishbone	Double Wishbone	Double Wishbone	Double Wishbone	Double Wishbone
Standard	Standard	Standard	Standard	Standard	Standard
Standard	Standard	Standard	Standard	Standard	Standard
Rack and Pinion	Rack and Pinion	Rack and Pinion	Rack and Pinion	Rack and Pinion	Rack and Pinion
17.5, 17.3*2	17.5, 17.3*2	16.1, 15.9*2	16.1, 15.9*2	16.1, 15.9*2	16.1, 15.9*2
EPS	EPS	Integral Type	Integral Type	Integral Type	Integral Type

AP

Item \ Area				EUROPE			
Body Type				4-Door Sedan			
Vehicle Grade				MID TECHNICAL			
Model Code				AZT250R-AEMEHW	AZT250L-AEMEHW	AZT250R-AEPEHW	AZT250L-AEPEHW
Major Dimensions & Vehicle Weights	Overall	Length	mm (in.)	4630 (182.3)	4630 (182.3)	4630 (182.3)	4630 (182.3)
		Width	mm (in.)	1760 (69.3)	1760 (69.3)	1760 (69.3)	1760 (69.3)
		Height	mm (in.)	1480 (58.3)	1480 (58.3)	1480 (58.3)	1480 (58.3)
	Wheel Base		mm (in.)	2700 (106.3)	2700 (106.3)	2700 (106.3)	2700 (106.3)
	Tread	Front	mm (in.)	1506 (59.3)	1506 (59.3)	1506 (59.3)	1506 (59.3)
		Rear	mm (in.)	1510 (59.4)	1510 (59.4)	1510 (59.4)	1510 (59.4)
	Room	Length	mm (in.)	2090 (82.3)	2090 (82.3)	2090 (82.3)	2090 (82.3)
		Width	mm (in.)	1485 (58.5)	1485 (58.5)	1485 (58.5)	1485 (58.5)
		Height	mm (in.)	1210 (47.6), 1160 (45.7)*1	1210 (47.6), 1160 (45.7)*1	1210 (47.6), 1160 (45.7)*1	1210 (47.6), 1160 (45.7)*1
	Overhang	Front	mm (in.)	910 (35.8)	910 (35.8)	910 (35.8)	910 (35.8)
		Rear	mm (in.)	1025 (40.4)	1025 (40.4)	1025 (40.4)	1025 (40.4)
	Min. Running Ground Clearance		mm (in.)	135 (5.3), 155 (6.1)*2	135 (5.3), 155 (6.1)*2	135 (5.3), 155 (6.1)*2	135 (5.3), 155 (6.1)*2
	Angle of Approach		degrees	13.1°, 14.5°*2	13.1°, 14.5°*2	13.1°, 14.5°*2	13.1°, 14.5°*2
	Angle of Departure		degrees	18.7°, 20.1°*2	18.7°, 20.1°*2	18.7°, 20.1°*2	18.7°, 20.1°*2
	Curb Weight	Front	kg (lb)	770 - 800 (1698 - 1764)	770 - 800 (1698 - 1764)	800 - 830 (1764 - 1830)	800 - 830 (1764 - 1830)
		Rear	kg (lb)	560 - 575 (1235 - 1268)	560 - 575 (1235 - 1268)	560 - 575 (1235 - 1268)	560 - 575 (1235 - 1268)
		Total	kg (lb)	1330 - 1375 (2933 - 3032)	1330 - 1375 (2933 - 3032)	1360 - 1405 (2999 - 3098)	1360 - 1405 (2999 - 3098)
	Gross Vehicle Weight	Front	kg (lb)	915 (2017)	915 (2017)	915 (2017)	915 (2017)
		Rear	kg (lb)	980 (2161)	980 (2161)	980 (2161)	980 (2161)
		Total	kg (lb)	1895 (4178)	1895 (4178)	1895 (4178)	1895 (4178)
	Fuel Tank Capacity		L (Imp.gal.)	60 (13.2)	60 (13.2)	60 (13.2)	60 (13.2)
	Luggage Compartment Capacity		m^3 (cu.ft.)	0.520 (18.4)	0.520 (18.4)	0.520 (18.4)	0.520 (18.4)
Performance	Max. Speed		km/h (mph)	210 (131)	210 (131)	205 (127)	205 (127)
	Max. Cruising Speed		km/h (mph)	—	—	—	—
	Acceleration	0 to 100 km/h	sec.	9.4	9.4	11.1	11.1
		0 to 400 m	sec.	16.6	16.6	17.6	17.6
	Max. Permissible Speed	1st Gear	km/h (mph)	56 (34)	56 (34)	63 (39)	63 (39)
		2nd Gear	km/h (mph)	96 (59)	96 (59)	114 (71)	114 (71)
		3rd Gear	km/h (mph)	149 (92)	149 (92)	177 (110)	177 (110)
		4th Gear	km/h (mph)	193 (119)	193 (119)	—	—
	Min. Turning Radius	Tire	m (ft.)	5.6 (18.4)	5.6 (18.4)	5.6 (18.4)	5.6 (18.4)
		Body	m (ft.)	5.995 (19.7)	5.995 (19.7)	5.995 (19.7)	5.995 (19.7)
Engine	Engine Type			1AZ-FSE	1AZ-FSE	1AZ-FSE	1AZ-FSE
	Valve Mechanism			16-Valve, DOHC	16-Valve, DOHC	16-Valve, DOHC	16-Valve, DOHC
	Bore × Stroke		mm (in.)	86.0 × 86.0 (3.39 × 3.39)	86.0 × 86.0 (3.39 × 3.39)	86.0 × 86.0 (3.39 × 3.39)	86.0 × 86.0 (3.39 × 3.39)
	Displacement		cm^3 (cu.in.)	1998 (121.9)	1998 (121.9)	1998 (121.9)	1998 (121.9)
	Compression Ratio			11.0	11.0	11.0	11.0
	Fuel System			EFI	EFI	EFI	EFI
	Research Octane No. or Cetane No. (Diesel)			95 or higher	95 or higher	95 or higher	95 or higher
	Max. Output (EEC)		kW/rpm	108/5700	108/5700	108/5700	108/5700
	Max. Torque (EEC)		N·m/rpm	196/4000	196/4000	196/4000	196/4000
Engine Electrical	Battery Capacity (5HR)		Voltage & Amp. hr.	12 -32, 48*3	12 -32, 48*3	12 - 48	12 - 48
	Alternator Output		Watts	1200	1200	1200	1200
	Starter Output		kW	1.3, 1.6*3	1.3, 1.6*3	1.6	1.6
Chassis	Clutch Type			Dry, Single Plate	Dry, Single Plate	—	—
	Transaxle Type			E354	E354	U241E*4	U241E*4
	Transmission Gear Ratio*5	In First		3.538	3.538	3.943	3.943
		In Second		2.054	2.054	2.197	2.197
		In Third		1.333	1.333	1.413	1.413
		In Fourth		1.028	1.028	1.020	1.020
		In Fifth		0.820	0.820	—	—
		In Reverse		3.583	3.583	3.145	3.145
	Differential Gear Ratio (Final)			3.684	3.684	2.923	2.923
	Brake Type	Front		Ventilated Disc	Ventilated Disc	Ventilated Disc	Ventilated Disc
		Rear		Solid Disc	Solid Disc	Solid Disc	Solid Disc
	Parking Brake Type			Drum	Drum	Drum	Drum
	Brake Booster Type and Size		in.	Tandem 8"+ 9"	Tandem 8"+ 9"	Tandem 8"+ 9"	Tandem 8"+ 9"
	Proportioning Valve Type			—	—	—	—
	Suspension Type	Front		MacPherson Strut	MacPherson Strut	MacPherson Strut	MacPherson Strut
		Rear		Double Wishbone	Double Wishbone	Double Wishbone	Double Wishbone
	Stabilizer Bar	Front		Standard	Standard	Standard	Standard
		Rear		Standard	Standard	Standard	Standard
	Steering Gear Type			Rack and Pinion	Rack and Pinion	Rack and Pinion	Rack and Pinion
	Steering Gear Ratio (Overall)			16.1, 15.9*2	16.1, 15.9*2	16.1, 15.9*2	16.1, 15.9*2
	Power Steering Type			Integral Type	Integral Type	Integral Type	Integral Type

*1: With Sun Roof
*2: Rough Road Pack
*3: Option
*4: Snow Mord Type
*5: Counter Gear Ratio Included (Only for Models with Automatic Transaxle)

EUROPE					
4-Door Sedan					
MID ELEGANT				MID TECHNICAL	MID ELEGANT
AZT250R-AEMGHW	AZT250L-AEMGHW	AZT250R-AEPGHW	AZT250L-AEPGHW	AZT251L-AEAEHW	AZT251R-AEAGHW
4630 (182.3)	4630 (182.3)	4630 (182.3)	4630 (182.3)	4630 (182.3)	4630 (182.3)
1760 (69.3)	1760 (69.3)	1760 (69.3)	1760 (69.3)	1760 (69.3)	1760 (69.3)
1480 (58.3)	1480 (58.3)	1480 (58.3)	1480 (58.3)	1480 (58.3)	1480 (58.3)
2700 (106.3)	2700 (106.3)	2700 (106.3)	2700 (106.3)	2700 (106.3)	2700 (106.3)
1506 (59.3)	1506 (59.3)	1506 (59.3)	1506 (59.3)	1506 (59.3)	1506 (59.3)
1510 (59.4)	1510 (59.4)	1510 (59.4)	1510 (59.4)	1510 (59.4)	1510 (59.4)
2090 (82.3)	2090 (82.3)	2090 (82.3)	2090 (82.3)	2090 (82.3)	2090 (82.3)
1485 (58.5)	1485 (58.5)	1485 (58.5)	1485 (58.5)	1485 (58.5)	1485 (58.5)
1210 (47.6), 1160 (45.7)*1	1210 (47.6), 1160 (45.7)*1	1210 (47.6), 1160 (45.7)*1	1210 (47.6), 1160 (45.7)*1	1210 (47.6), 1160 (45.7)*1	1210 (47.6), 1160 (45.7)*1
910 (35.8)	910 (35.8)	910 (35.8)	910 (35.8)	910 (35.8)	910 (35.8)
1025 (40.4)	1025 (40.4)	1025 (40.4)	1025 (40.4)	1025 (40.4)	1025 (40.4)
135 (5.3), 155 (6.1)*2	135 (5.3), 155 (6.1)*2	135 (5.3), 155 (6.1)*2	135 (5.3), 155 (6.1)*2	135 (5.3), 155 (6.1)*2	135 (5.3), 155 (6.1)*2
13.1°, 14.5°*2	13.1°, 14.5°*2	13.1°, 14.5°*2	13.1°, 14.5°*2	13.1°, 14.5°*2	13.1°, 14.5°*2
18.7°, 20.1°*2	18.7°, 20.1°*2	18.7°, 20.1°*2	18.7°, 20.1°*2	18.7°, 20.1°*2	18.7°, 20.1°*2
770 - 800 (1698 - 1764)	770 - 800 (1698 - 1764)	800 - 830 (1764 - 1830)	800 - 830 (1764 - 1830)	820 - 850 (1806 - 1872)	820 - 850 (1806 - 1872)
560 - 575 (1235 - 1268)	560 - 575 (1235 - 1268)	560 - 575 (1235 - 1268)	560 - 575 (1235 - 1268)	555 - 570 (1222 - 1256)	555 - 570 (1222 - 1256)
1330 - 1375 (2933 - 3032)	1330 - 1375 (2933 - 3032)	1360 - 1405 (2999 - 3098)	1360 - 1405 (2999 - 3098)	1375 - 1420 (3029 - 3128)	1375 - 1420 (3029 - 3128)
915 (2017)	915 (2017)	915 (2017)	915 (2017)	935 (2059)	935 (2059)
980 (2161)	980 (2161)	980 (2161)	980 (2161)	970 (2137)	970 (2137)
1895 (4178)	1895 (4178)	1895 (4178)	1895 (4178)	1905 (4196)	1905 (4196)
60 (13.2)	60 (13.2)	60 (13.2)	60 (13.2)	60 (13.2)	60 (13.2)
0.520 (18.4)	0.520 (18.4)	0.520 (18.4)	0.520 (18.4)	0.520 (18.4)	0.520 (18.4)
210 (131)	210 (131)	205 (127)	205 (127)	220 (138)	220 (138)
—	—	—	—	—	—
9.4	9.4	11.1	11.1	9.3	9.3
16.6	16.6	17.6	17.6	16.7	16.7
56 (34)	56 (34)	63 (39)	63 (39)	45 (27)	45 (27)
96 (59)	96 (59)	114 (71)	114 (71)	84 (52)	84 (52)
149 (92)	149 (92)	177 (110)	177 (110)	128 (79)	128 (79)
193 (119)	193 (119)	—	—	176 (109)	176 (109)
5.6 (18.4)	5.6 (18.4)	5.6 (18.4)	5.6 (18.4)	5.6 (18.4)	5.6 (18.4)
5.995 (19.7)	5.995 (19.7)	5.995 (19.7)	5.995 (19.7)	5.995 (19.7)	5.995 (19.7)
1AZ-FSE	1AZ-FSE	1AZ-FSE	1AZ-FSE	2AZ-FSE	2AZ-FSE
16-Valve, DOHC	16-Valve, DOHC	16-Valve, DOHC	16-Valve, DOHC	16-Valve, DOHC	16-Valve, DOHC
86.0 × 86.0 (3.39 × 3.39)	86.0 × 86.0 (3.39 × 3.39)	86.0 × 86.0 (3.39 × 3.39)	86.0 × 86.0 (3.39 × 3.39)	88.5 × 96.0 (3.48 × 3.78)	88.5 × 96.0 (3.48 × 3.78)
1998 (121.9)	1998 (121.9)	1998 (121.9)	1998 (121.9)	2362 (144.2)	2362 (144.2)
11.0	11.0	11.0	11.0	11.0	11.0
EFI	EFI	EFI	EFI	EFI	EFI
95 or higher	95 or higher	95 or higher	95 or higher	95 or higher	95 or higher
108/5700	108/5700	108/5700	108/5700	120/5800	120/5800
196/4000	196/4000	196/4000	196/4000	230/4000	230/4000
12 -32, 48*3	12 -32, 48*2	12 - 48	12 - 48	12 - 48	12 - 48
1200	1200	1200	1200	1200	1200
1.3, 1.6*3	1.3, 1.6*3	1.6	1.6	1.6	1.6
Dry, Single Plate	Dry, Single Plate	—	—	—	—
E354	E354	U241E*4	U241E*4	U151E	U151E
3.538	3.538	3.943	3.943	4.235	4.235
2.054	2.054	2.197	2.197	2.360	2.360
1.333	1.333	1.413	1.413	1.517	1.517
1.028	1.028	1.020	1.020	1.047	1.047
0.820	0.820	—	—	0.756	0.756
3.583	3.583	3.145	3.145	3.378	3.378
3.684	3.684	2.923	2.923	3.478	3.478
Ventilated Disc	Ventilated Disc	Ventilated Disc	Ventilated Disc	Ventilated Disc	Ventilated Disc
Solid Disc	Solid Disc	Solid Disc	Solid Disc	Solid Disc	Solid Disc
Drum	Drum	Drum	Drum	Drum	Drum
Tandem 8"+ 9"	Tandem 8"+ 9"	Tandem 8"+ 9"	Tandem 8"+ 9"	Tandem 8"+ 9"	Tandem 8"+ 9"
—	—	—	—	—	—
MacPherson Strut	MacPherson Strut	MacPherson Strut	MacPherson Strut	MacPherson Strut	MacPherson Strut
Double Wishbone	Double Wishbone	Double Wishbone	Double Wishbone	Double Wishbone	Double Wishbone
Standard	Standard	Standard	Standard	Standard	Standard
Standard	Standard	Standard	Standard	Standard	Standard
Rack and Pinion	Rack and Pinion	Rack and Pinion	Rack and Pinion	Rack and Pinion	Rack and Pinion
16.1, 15.9*2	16.1, 15.9*2	16.1, 15.9*2	16.1, 15.9*2	16.1, 15.9*2	16.1, 15.9*2
Integral Type	Integral Type	Integral Type	Integral Type	Integral Type	Integral Type

AP

Item \ Area				EUROPE			
Body Type				4-Door Sedan			
Vehicle Grade				MID ELEGANT	ENTRY		MID TECHNICAL
Model Code				AZT251L-AEAGHW	CDT250R-AEMNYW	CDT250L-AEMNYW	CDT250R-AEMEYW
Major Dimensions & Vehicle Weights	Overall	Length	mm (in.)	4630 (182.3)	4630 (182.3)	4630 (182.3)	4630 (182.3)
		Width	mm (in.)	1760 (69.3)	1760 (69.3)	1760 (69.3)	1760 (69.3)
		Height	mm (in.)	1480 (58.3)	1480 (58.3)	1480 (58.3)	1480 (58.3)
	Wheel Base		mm (in.)	2700 (106.3)	2700 (106.3)	2700 (106.3)	2700 (106.3)
	Tread	Front	mm (in.)	1506 (59.3)	1506 (59.3)	1506 (59.3)	1506 (59.3)
		Rear	mm (in.)	1510 (59.4)	1510 (59.4)	1510 (59.4)	1510 (59.4)
	Room	Length	mm (in.)	2090 (82.3)	2090 (82.3)	2090 (82.3)	2090 (82.3)
		Width	mm (in.)	1485 (58.5)	1485 (58.5)	1485 (58.5)	1485 (58.5)
		Height	mm (in.)	1210 (47.6), 1160 (45.7)*1	1210 (47.6), 1160 (45.7)*1	1210 (47.6), 1160 (45.7)*1	1210 (47.6), 1160 (45.7)*1
	Overhang	Front	mm (in.)	910 (35.8)	910 (35.8)	910 (35.8)	910 (35.8)
		Rear	mm (in.)	1025 (40.4)	1025 (40.4)	1025 (40.4)	1025 (40.4)
	Min. Running Ground Clearance		mm (in.)	135 (5.3), 155 (6.1)*2	135 (5.3), 155 (6.1)*2	135 (5.3), 155 (6.1)*2	135 (5.3), 155 (6.1)*2
	Angle of Approach		degrees	13.1°, 14.5°*2	13.1°, 14.5°*2	13.1°, 14.5°*2	13.1°, 14.5°*2
	Angle of Departure		degrees	18.7°, 20.1°*2	18.7°, 20.1°*2	18.7°, 20.1°*2	18.7°, 20.1°*2
	Curb Weight	Front	kg (lb)	820 - 850 (1806 - 1872)	845 - 895 (1863 - 1973)	845 - 895 (1863 - 1973)	845 - 900 (1863 - 1984)
		Rear	kg (lb)	555 - 570 (1222 - 1256)	535 - 550 (1179 - 1213)	535 - 550 (1179 - 1213)	535 - 565 (1179 - 1246)
		Total	kg (lb)	1375 - 1420 (3029 - 3128)	1380 - 1445 (3042 - 3186)	1380 - 1445 (3042 - 3186)	1380 - 1465 (3042 - 3230)
	Gross Vehicle Weight	Front	kg (lb)	935 (2059)	985 (2172)	985 (2172)	985 (2172)
		Rear	kg (lb)	970 (2137)	985 (2172)	985 (2172)	985 (2172)
		Total	kg (lb)	1905 (4196)	1970 (4344)	1970 (4344)	1970 (4344)
	Fuel Tank Capacity		L (Imp.gal.)	60 (13.2)	60 (13.2)	60 (13.2)	60 (13.2)
	Luggage Compartment Capacity		m^3 (cu.ft.)	0.520 (18.4)	0.520 (18.4)	0.520 (18.4)	0.520 (18.4)
Performance	Max. Speed		km/h (mph)	220 (138)	195 (121)	195 (121)	195 (121)
	Max. Cruising Speed		km/h (mph)	—	—	—	—
	Acceleration	0 to 100 km/h	sec.	9.3	11.2	11.2	11.2
		0 to 400 m	sec.	16.7	17.7	17.7	17.7
	Max. Permissible Speed	1st Gear	km/h (mph)	45 (27)	45 (27)	45 (27)	45 (27)
		2nd Gear	km/h (mph)	84 (52)	84 (52)	84 (52)	84 (52)
		3rd Gear	km/h (mph)	128 (79)	128 (79)	128 (79)	128 (79)
		4th Gear	km/h (mph)	176 (109)	176 (109)	176 (109)	176 (109)
	Min. Turning Radius	Tire	m (ft.)	5.6 (18.4)	5.6 (18.4)	5.6 (18.4)	5.6 (18.4)
		Body	m (ft.)	5.995 (19.7)	5.995 (19.7)	5.995 (19.7)	5.995 (19.7)
Engine	Engine Type			2AZ-FSE	1CD-FTV	1CD-FTV	1CD-FTV
	Valve Mechanism			16-Valve, DOHC	16-Valve, DOHC	16-Valve, DOHC	16-Valve, DOHC
	Bore × Stroke		mm (in.)	88.5 × 96.0 (3.48 × 3.78)	82.2 × 94.0 (3.24 × 3.70)	82.2 × 94.0 (3.24 × 3.70)	82.2 × 94.0 (3.24 × 3.70)
	Displacement		cm^3 (cu.in.)	2362 (144.2)	1995 (121.7)	1995 (121.7)	1995 (121.7)
	Compression Ratio			11.0	17.8	17.8	17.8
	Fuel System			EFI	Common-Rail Type	Common-Rail Type	Common-Rail Type
	Research Octane No. or Cetane No. (Diesel)			95 or higher	48 or higher	48 or higher	48 or higher
	Max. Output (EEC)		kW/rpm	120/5800	85/3600	85/3600	85/3600
	Max. Torque (EEC)		N·m/rpm	230/4000	280/2000-2200	280/2000-2200	280/2000-2200
Engine Electrical	Battery Capacity (5HR)		Voltage & Amp. hr.	12 - 48	12 - 60	12 - 60	12 - 60
	Alternator Output		Watts	1200	1200, 1080*3	1200, 1080*3	1200
	Starter Output		kW	1.6	2.0	2.0	2.0
Chassis	Clutch Type			—	Dry, Single Plate	Dry, Single Plate	Dry, Single Plate
	Transaxle Type			U151E	E357	E357	E357
	Transmission Gear Ratio*4	In First		4.235	3.538	3.538	3.538
		In Second		2.360	1.913	1.913	1.913
		In Third		1.517	1.258	1.258	1.258
		In Fourth		1.047	0.918	0.918	0.918
		In Fifth		0.756	0.690	0.690	0.690
		In Reverse		3.378	3.583	3.583	3.583
	Differential Gear Ratio (Final)			3.478	3.684	3.684	3.684
	Brake Type	Front		Ventilated Disc	Ventilated Disc	Ventilated Disc	Ventilated Disc
		Rear		Solid Disc	Solid Disc	Solid Disc	Solid Disc
	Parking Brake Type			Drum	Drum	Drum	Drum
	Brake Booster Type and Size		in.	Tandem 8"+ 9"	Tandem 8"+ 9"	Tandem 8"+ 9"	Tandem 8"+ 9"
	Proportioning Valve Type			—	—	—	—
	Suspension Type	Front		MacPherson Strut	MacPherson Strut	MacPherson Strut	MacPherson Strut
		Rear		Double Wishbone	Double Wishbone	Double Wishbone	Double Wishbone
	Stabilizer Bar	Front		Standard	Standard	Standard	Standard
		Rear		Standard	Standard	Standard	Standard
	Steering Gear Type			Rack and Pinion	Rack and Pinion	Rack and Pinion	Rack and Pinion
	Steering Gear Ratio (Overall)			16.1, 15.9*2	16.1, 15.9*2	16.1, 15.9*2	16.1, 15.9*2
	Power Steering Type			Integral Type	Integral Type	Integral Type	Integral Type

*1: With Sun Roof
*2: Rough Road Pack
*3: Option
*4: Counter Gear Ratio Included (Only for Models with Automatic Transaxle)

EUROPE					
4-Door Sedan					
MID TECHNICAL	MID ELEGANT		MID TECHNICAL		MID ELEGANT
CDT250L-AEMEYW	CDT250R-AEMGYW	CDT250L-AEMGYW	CDT250R-AEMEXW	CDT250L-AEMEXW	CDT250R-AEMGXW
4630 (182.3)	4630 (182.3)	4630 (182.3)	4630 (182.3)	4630 (182.3)	4630 (182.3)
1760 (69.3)	1760 (69.3)	1760 (69.3)	1760 (69.3)	1760 (69.3)	1760 (69.3)
1480 (58.3)	1480 (58.3)	1480 (58.3)	1480 (58.3)	1480 (58.3)	1480 (58.3)
2700 (106.3)	2700 (106.3)	2700 (106.3)	2700 (106.3)	2700 (106.3)	2700 (106.3)
1506 (59.3)	1506 (59.3)	1506 (59.3)	1506 (59.3)	1506 (59.3)	1506 (59.3)
1510 (59.4)	1510 (59.4)	1510 (59.4)	1510 (59.4)	1510 (59.4)	1510 (59.4)
2090 (82.3)	2090 (82.3)	2090 (82.3)	2090 (82.3)	2090 (82.3)	2090 (82.3)
1485 (58.5)	1485 (58.5)	1485 (58.5)	1485 (58.5)	1485 (58.5)	1485 (58.5)
1210 (47.6), 1160 (45.7)*1	1210 (47.6), 1160 (45.7)*1	1210 (47.6), 1160 (45.7)*1	1210 (47.6), 1160 (45.7)*1	1210 (47.6), 1160 (45.7)*1	1210 (47.6), 1160 (45.7)*1
910 (35.8)	910 (35.8)	910 (35.8)	910 (35.8)	910 (35.8)	910 (35.8)
1025 (40.4)	1025 (40.4)	1025 (40.4)	1025 (40.4)	1025 (40.4)	1025 (40.4)
135 (5.3), 155 (6.1)*2	135 (5.3), 155 (6.1)*2	135 (5.3), 155 (6.1)*2	135 (5.3)	135 (5.3)	135 (5.3)
13.1°, 14.5°*2	13.1°, 14.5°*2	13.1°, 14.5°*2	13.1°	13.1°	13.1°
18.7°, 20.1°*2	18.7°, 20.1°*2	18.7°, 20.1°*2	18.7°	18.7°	18.7°
845 - 900 (1863 - 1984)	845 - 900 (1863 - 1984)	845 - 900 (1863 - 1984)	845 - 900 (1863 - 1984)	845 - 900 (1863 - 1984)	845 - 900 (1863 - 1984)
535 - 565 (1179 - 1246)	535 - 565 (1179 - 1246)	535 - 565 (1179 - 1246)	535 - 565 (1179 - 1246)	535 - 565 (1179 - 1246)	535 - 565 (1179 - 1246)
1380 - 1465 (3042 - 3230)	1380 - 1465 (3042 - 3230)	1380 - 1465 (3042 - 3230)	1380 - 1465 (3042 - 3230)	1380 - 1465 (3042 - 3230)	1380 - 1465 (3042 - 3230)
985 (2172)	985 (2172)	985 (2172)	985 (2172)	985 (2172)	985 (2172)
985 (2172)	985 (2172)	985 (2172)	985 (2172)	985 (2172)	985 (2172)
1970 (4344)	1970 (4344)	1970 (4344)	1970 (4344)	1970 (4344)	1970 (4344)
60 (13.2)	60 (13.2)	60 (13.2)	60 (13.2)	60 (13.2)	60 (13.2)
0.520 (18.4)	0.520 (18.4)	0.520 (18.4)	0.520 (18.4)	0.520 (18.4)	0.520 (18.4)
195 (121)	195 (121)	195 (121)	195 (121)	195 (121)	195 (121)
—	—	—	—	—	—
11.2	11.2	11.2	11.4	11.4	11.4
17.7	17.7	17.7	17.8	17.8	17.8
45 (27)	45 (27)	45 (27)	45 (27)	45 (27)	45 (27)
84 (52)	84 (52)	84 (52)	84 (52)	84 (52)	84 (52)
128 (79)	128 (79)	128 (79)	128 (79)	128 (79)	128 (79)
176 (109)	176 (109)	176 (109)	176 (109)	176 (109)	176 (109)
5.6 (18.4)	5.6 (18.4)	5.6 (18.4)	5.6 (18.4)	5.6 (18.4)	5.6 (18.4)
5.995 (19.7)	5.995 (19.7)	5.995 (19.7)	5.995 (19.7)	5.995 (19.7)	5.995 (19.7)
1CD-FTV	1CD-FTV	1CD-FTV	1CD-FTV	1CD-FTV	1CD-FTV
16-Valve, DOHC	16-Valve, DOHC	16-Valve, DOHC	16-Valve, DOHC	16-Valve, DOHC	16-Valve, DOHC
82.2 × 94.0 (3.24 × 3.70)	82.2 × 94.0 (3.24 × 3.70)	82.2 × 94.0 (3.24 × 3.70)	82.2 × 94.0 (3.24 × 3.70)	82.2 × 94.0 (3.24 × 3.70)	82.2 × 94.0 (3.24 × 3.70)
1995 (121.7)	1995 (121.7)	1995 (121.7)	1995 (121.7)	1995 (121.7)	1995 (121.7)
17.8	17.8	17.8	17.8	17.8	17.8
Common-Rail Type	Common-Rail Type	Common-Rail Type	Common-Rail Type	Common-Rail Type	Common-Rail Type
48 or higher	48 or higher	48 or higher	48 or higher	48 or higher	48 or higher
85/3600	85/3600	85/3600	85/3600	85/3600	85/3600
280/2000-2200	280/2000-2200	280/2000-2200	280/2000-2200	280/2000-2200	280/2000-2200
12 - 60	12 - 60	12 - 60	12 - 60	12 - 60	12 - 60
1200	1200	1200	1200	1200	1200
2.0	2.0	2.0	2.0	2.0	2.0
Dry, Single Plate	Dry, Single Plate	Dry, Single Plate	Dry, Single Plate	Dry, Single Plate	Dry, Single Plate
E357	E357	E357	E357	E357	E357
3.538	3.538	3.538	3.538	3.538	3.538
1.913	1.913	1.913	1.913	1.913	1.913
1.258	1.258	1.258	1.258	1.258	1.258
0.918	0.918	0.918	0.918	0.918	0.918
0.690	0.690	0.690	0.690	0.690	0.690
3.583	3.583	3.583	3.583	3.583	3.583
3.684	3.684	3.684	3.684	3.684	3.684
Ventilated Disc	Ventilated Disc	Ventilated Disc	Ventilated Disc	Ventilated Disc	Ventilated Disc
Solid Disc	Solid Disc	Solid Disc	Solid Disc	Solid Disc	Solid Disc
Drum	Drum	Drum	Drum	Drum	Drum
Tandem 8"+ 9"	Tandem 8"+ 9"	Tandem 8"+ 9"	Tandem 8"+ 9"	Tandem 8"+ 9"	Tandem 8"+ 9"
—	—	—	—	—	—
MacPherson Strut	MacPherson Strut	MacPherson Strut	MacPherson Strut	MacPherson Strut	MacPherson Strut
Double Wishbone	Double Wishbone	Double Wishbone	Double Wishbone	Double Wishbone	Double Wishbone
Standard	Standard	Standard	Standard	Standard	Standard
Standard	Standard	Standard	Standard	Standard	Standard
Rack and Pinion	Rack and Pinion	Rack and Pinion	Rack and Pinion	Rack and Pinion	Rack and Pinion
16.1, 15.9*2	16.1, 15.9*2	16.1, 15.9*2	16.1	16.1	16.1
Integral Type	Integral Type	Integral Type	Integral Type	Integral Type	Integral Type

AP

Item \ Area				EUROPE			
Body Type				4-Door Sedan	5-Door Liftback		
Vehicle Grade				MID ELEGANT	ENTRY		
Model Code				CDT250L-AEMGXW	ZZT250R-ALMNKW	ZZT250L-ALMNKW	ZZT251R-ALMNKW
Major Dimensions & Vehicle Weights	Overall	Length	mm (in.)	4630 (182.3)	4630 (182.3)	4630 (182.3)	4630 (182.3)
		Width	mm (in.)	1760 (69.3)	1760 (69.3)	1760 (69.3)	1760 (69.3)
		Height	mm (in.)	1480 (58.3)	1480 (58.3)	1480 (58.3)	1480 (58.3)
	Wheel Base		mm (in.)	2700 (106.3)	2700 (106.3)	2700 (106.3)	2700 (106.3)
	Tread	Front	mm (in.)	1506 (59.3)	1506 (59.3)	1506 (59.3)	1506 (59.3)
		Rear	mm (in.)	1510 (59.4)	1510 (59.4)	1510 (59.4)	1510 (59.4)
	Room	Length	mm (in.)	2090 (82.3)	2090 (82.3)	2090 (82.3)	2090 (82.3)
		Width	mm (in.)	1485 (58.5)	1485 (58.5)	1485 (58.5)	1485 (58.5)
		Height	mm (in.)	1210 (47.6), 1160 (45.7)*1	1210 (47.6), 1160 (45.7)*1	1210 (47.6), 1160 (45.7)*1	1210 (47.6), 1160 (45.7)*1
	Overhang	Front	mm (in.)	910 (35.8)	910 (35.8)	910 (35.8)	910 (35.8)
		Rear	mm (in.)	1025 (40.4)	1025 (40.4)	1025 (40.4)	1025 (40.4)
	Min. Running Ground Clearance		mm (in.)	135 (5.3)	135 (5.3), 155 (6.1)*2	135 (5.3), 155 (6.1)*2	135 (5.3), 155 (6.1)*2
	Angle of Approach		degrees	13.1°	13.1°, 14.5°*2	13.1°, 14.5°*2	13.1°, 14.5°*2
	Angle of Departure		degrees	18.7°	18.7°, 20.1°*2	18.7°, 20.1°*2	18.7°, 20.1°*2
	Curb Weight	Front	kg (lb)	845 - 900 (1863 - 1984)	710 - 750 (1565 - 1653)	710 - 750 (1565 - 1653)	710 - 750 (1565 - 1653)
		Rear	kg (lb)	535 - 565 (1179 - 1246)	555 - 570 (1224 - 1257)	555 - 570 (1224 - 1257)	555 - 580 (1224 - 1279)
		Total	kg (lb)	1380 - 1465 (3042 - 3230)	1265 - 1320 (2789 - 2910)	1265 - 1320 (2789 - 2910)	1265 - 1330 (2789 - 2932)
	Gross Vehicle Weight	Front	kg (lb)	985 (2172)	840 (1852)	840 (1852)	840 (1852)
		Rear	kg (lb)	985 (2172)	980 (2161)	980 (2161)	980 (2161)
		Total	kg (lb)	1970 (4344)	1820 (4013)	1820 (4013)	1820 (4013)
	Fuel Tank Capacity		L (Imp.gal.)	60 (13.2)	60 (13.2)	60 (13.2)	60 (13.2)
	Luggage Compartment Capacity		m^3 (cu.ft.)	0.520 (18.4)	0.510 (18.0)	0.510 (18.0)	0.510 (18.0)
Performance	Max. Speed		km/h (mph)	195 (121)	195 (121)	195 (121)	200 (124)
	Max. Cruising Speed		km/h (mph)	—	—	—	—
	Acceleration	0 to 100 km/h	sec.	11.4	12.0	12.0	10.3
		0 to 400 m	sec.	17.8	18.1	18.1	17.1
	Max. Permissible Speed	1st Gear	km/h (mph)	45 (27)	47 (29)	47 (29)	51 (31)
		2nd Gear	km/h (mph)	84 (52)	87 (54)	87 (54)	95 (59)
		3rd Gear	km/h (mph)	128 (79)	127 (78)	127 (78)	139 (86)
		4th Gear	km/h (mph)	176 (109)	172 (106)	172 (106)	176 (109)
	Min. Turning Radius	Tire	m (ft.)	5.6 (18.4)	5.4 (17.7)	5.4 (17.7)	5.4 (17.7)
		Body	m (ft.)	5.995 (19.7)	5.75 (18.9)	5.75 (18.9)	5.75 (18.9)
Engine	Engine Type			1CD-FTV	3ZZ-FE	3ZZ-FE	1ZZ-FE
	Valve Mechanism			16-Valve, DOHC	16-Valve, DOHC	16-Valve, DOHC	16-Valve, DOHC
	Bore × Stroke		mm (in.)	82.2 × 94.0 (3.24 × 3.70)	79.0 × 81.5 (3.11 × 3.21)	79.0 × 81.5 (3.11 × 3.21)	79.0 × 91.5 (3.11 × 3.60)
	Displacement		cm^3 (cu.in.)	1995 (121.7)	1598 (97.5)	1598 (97.5)	1794 (109.5)
	Compression Ratio			17.8	10.5	10.5	10.0
	Fuel System			Common-Rail Type	EFI	EFI	EFI
	Research Octane No. or Cetane No. (Diesel)			48 or higher	95 or higher	95 or higher	95 or higher
	Max. Output (EEC)		kW/rpm	85/3600	81/6000	81/6000	95/6000
	Max. Torque (EEC)		N·m/rpm	280/2000-2200	150/3800	150/3800	170/4200
Engine Electrical	Battery Capacity (5HR)		Voltage & Amp. hr.	12 - 60	12 -32, 48*3	12 -32, 48*3	12 -32, 48*3
	Alternator Output		Watts	1200	1080	1080	1080
	Starter Output		kW	2.0	1.3	1.3	1.3
Chassis	Clutch Type			Dry, Single Plate	Dry, Single Plate	Dry, Single Plate	Dry, Single Plate
	Transaxle Type			E357	C50	C50	C250
	Transmission Gear Ratio*4	In First		3.538	3.545	3.545	3.545
		In Second		1.913	1.904	1.904	1.904
		In Third		1.258	1.310	1.310	1.310
		In Fourth		0.918	0.969	0.969	1.031
		In Fifth		0.690	0.815	0.815	0.815
		In Reverse		3.583	3.250	3.250	3.250
	Differential Gear Ratio (Final)			3.684	4.312	4.312	3.941
	Brake Type	Front		Ventilated Disc	Ventilated Disc	Ventilated Disc	Ventilated Disc
		Rear		Solid Disc	Solid Disc	Solid Disc	Solid Disc
	Parking Brake Type			Drum	Drum	Drum	Drum
	Brake Booster Type and Size		in.	Tandem 8"+ 9"	Tandem 8"+ 9"	Tandem 8"+ 9"	Tandem 8"+ 9"
	Proportioning Valve Type			—	—	—	—
	Suspension Type	Front		MacPherson Strut	MacPherson Strut	MacPherson Strut	MacPherson Strut
		Rear		Double Wishbone	Double Wishbone	Double Wishbone	Double Wishbone
	Stabilizer Bar	Front		Standard	Standard	Standard	Standard
		Rear		Standard	Standard	Standard	Standard
	Steering Gear Type			Rack and Pinion	Rack and Pinion	Rack and Pinion	Rack and Pinion
	Steering Gear Ratio (Overall)			16.1	17.5, 17.3*2	17.5, 17.3*2	17.5, 17.3*2
	Power Steering Type			Integral Type	EPS	EPS	EPS

*1: With Sun Roof
*2: Rough Road Pack
*3: Option
*4: Counter Gear Ratio Included (Only for Models with Automatic Transaxle)

EUROPE					
5-Door Liftback					
ENTRY			MID TECHNICAL		
ZZT251L-ALMNKW	ZZT251R-ALPNKW	ZZT251L-ALPNKW	ZZT251R-ALMEKW	ZZT251L-ALMEKW	ZZT251R-ALPEKW
4630 (182.3)	4630 (182.3)	4630 (182.3)	4630 (182.3)	4630 (182.3)	4630 (182.3)
1760 (69.3)	1760 (69.3)	1760 (69.3)	1760 (69.3)	1760 (69.3)	1760 (69.3)
1480 (58.3)	1480 (58.3)	1480 (58.3)	1480 (58.3)	1480 (58.3)	1480 (58.3)
2700 (106.3)	2700 (106.3)	2700 (106.3)	2700 (106.3)	2700 (106.3)	2700 (106.3)
1506 (59.3)	1506 (59.3)	1506 (59.3)	1506 (59.3)	1506 (59.3)	1506 (59.3)
1510 (59.4)	1510 (59.4)	1510 (59.4)	1510 (59.4)	1510 (59.4)	1510 (59.4)
2090 (82.3)	2090 (82.3)	2090 (82.3)	2090 (82.3)	2090 (82.3)	2090 (82.3)
1485 (58.5)	1485 (58.5)	1485 (58.5)	1485 (58.5)	1485 (58.5)	1485 (58.5)
1210 (47.6), 1160 (45.7)*1	1210 (47.6), 1160 (45.7)*1	1210 (47.6), 1160 (45.7)*1	1210 (47.6), 1160 (45.7)*1	1210 (47.6), 1160 (45.7)*1	1210 (47.6), 1160 (45.7)*1
910 (35.8)	910 (35.8)	910 (35.8)	910 (35.8)	910 (35.8)	910 (35.8)
1025 (40.4)	1025 (40.4)	1025 (40.4)	1025 (40.4)	1025 (40.4)	1025 (40.4)
135 (5.3), 155 (6.1)*2	135 (5.3), 155 (6.1)*2	135 (5.3), 155 (6.1)*2	135 (5.3), 155 (6.1)*2	135 (5.3), 155 (6.1)*2	135 (5.3), 155 (6.1)*2
13.1°, 14.5°*2	13.1°, 14.5°*2	13.1°, 14.5°*2	13.1°, 14.5°*2	13.1°, 14.5°*2	13.1°, 14.5°*2
18.7°, 20.1°*2	18.7°, 20.1°*2	18.7°, 20.1°*2	18.7°, 20.1°*2	18.7°, 20.1°*2	18.7°, 20.1°*2
710 - 750 (1565 - 1653)	730 - 770 (1609 - 1698)	730 - 770 (1609 - 1698)	720 - 750 (1587 - 1653)	720 - 750 (1587 - 1653)	730 - 770 (1609 - 1698)
555 - 580 (1224 - 1279)	555 - 580 (1224 - 1279)	555 - 580 (1224 - 1279)	555 - 580 (1224 - 1279)	555 - 580 (1224 - 1279)	555 - 580 (1224 - 1279)
1265 - 1330 (2789 - 2932)	1285 - 1350 (2833 - 2977)	1285 - 1350 (2833 - 2977)	1275 - 1330 (2811 - 2932)	1275 - 1330 (2811 - 2932)	1285 - 1350 (2833 - 2977)
840 (1852)	840 (1852)	840 (1852)	840 (1852)	840 (1852)	840 (1852)
980 (2161)	980 (2161)	980 (2161)	980 (2161)	980 (2161)	980 (2161)
1820 (4013)	1820 (4013)	1820 (4013)	1820 (4013)	1820 (4013)	1820 (4013)
60 (13.2)	60 (13.2)	60 (13.2)	60 (13.2)	60 (13.2)	60 (13.2)
0.510 (18.0)	0.510 (18.0)	0.510 (18.0)	0.510 (18.0)	0.510 (18.0)	0.510 (18.0)
200 (124)	195 (121)	195 (121)	200 (124)	200 (124)	195 (121)
—	—	—	—	—	—
10.3	11.6	11.6	10.3	10.3	11.6
17.1	17.9	17.9	17.1	17.1	17.9
51 (31)	59 (36)	59 (36)	51 (31)	51 (31)	59 (36)
95 (59)	109 (67)	109 (67)	95 (59)	95 (59)	109 (67)
139 (86)	169 (105)	169 (105)	139 (86)	139 (86)	169 (105)
176 (109)	—	—	176 (109)	176 (109)	—
5.4 (17.7)	5.4 (17.7)	5.4 (17.7)	5.4 (17.7)	5.4 (17.7)	5.4 (17.7)
5.75 (18.9)	5.75 (18.9)	5.75 (18.9)	5.75 (18.9)	5.75 (18.9)	5.75 (18.9)
1ZZ-FE	1ZZ-FE	1ZZ-FE	1ZZ-FE	1ZZ-FE	1ZZ-FE
16-Valve, DOHC	16-Valve, DOHC	16-Valve, DOHC	16-Valve, DOHC	16-Valve, DOHC	16-Valve, DOHC
79.0 × 91.5 (3.11 × 3.60)	79.0 × 91.5 (3.11 × 3.60)	79.0 × 91.5 (3.11 × 3.60)	79.0 × 91.5 (3.11 × 3.60)	79.0 × 91.5 (3.11 × 3.60)	79.0 × 91.5 (3.11 × 3.60)
1794 (109.5)	1794 (109.5)	1794 (109.5)	1794 (109.5)	1794 (109.5)	1794 (109.5)
10.0	10.0	10.0	10.0	10.0	10.0
EFI	EFI	EFI	EFI	EFI	EFI
95 or higher	95 or higher	95 or higher	95 or higher	95 or higher	95 or higher
95/6000	95/6000	95/6000	95/6000	95/6000	95/6000
170/4200	170/4200	170/4200	170/4200	170/4200	170/4200
12 -32, 48*3	12 -32, 48*3	12 -32, 48*3	12 -32, 40*3	12 -32, 40*3	12 -32, 40*3
1080	1080	1080	1080	1080	1080
1.3	1.3	1.3	1.3	1.3	1.3
Dry, Single Plate	—	—	Dry, Single Plate	Dry, Single Plate	—
C250	U341E	U341E	C250	C250	U341E
3.545	2.847	2.847	3.545	3.545	2.847
1.904	1.552	1.552	1.904	1.904	1.552
1.310	1.000	1.000	1.310	1.310	1.000
1.031	0.700	0.700	1.031	1.031	0.700
0.815	—	—	0.815	0.815	—
3.250	2.343	2.343	3.250	3.250	2.343
3.941	4.237	4.237	3.941	3.941	4.237
Ventilated Disc	Ventilated Disc	Ventilated Disc	Ventilated Disc	Ventilated Disc	Ventilated Disc
Solid Disc	Solid Disc	Solid Disc	Solid Disc	Solid Disc	Solid Disc
Drum	Drum	Drum	Drum	Drum	Drum
Tandem 8"+ 9"	Tandem 8"+ 9"	Tandem 8"+ 9"	Tandem 8"+ 9"	Tandem 8"+ 9"	Tandem 8"+ 9"
—	—	—	—	—	—
MacPherson Strut	MacPherson Strut	MacPherson Strut	MacPherson Strut	MacPherson Strut	MacPherson Strut
Double Wishbone	Double Wishbone	Double Wishbone	Double Wishbone	Double Wishbone	Double Wishbone
Standard	Standard	Standard	Standard	Standard	Standard
Standard	Standard	Standard	Standard	Standard	Standard
Rack and Pinion	Rack and Pinion	Rack and Pinion	Rack and Pinion	Rack and Pinion	Rack and Pinion
17.5, 17.3*2	17.5, 17.3*2	17.5, 17.3*2	17.5, 17.3*2	17.5, 17.3*2	17.5, 17.3*2
EPS	EPS	EPS	EPS	EPS	EPS

AP

Item \ Area				EUROPE			
Body Type				5-Door Liftback			
Vehicle Grade				MID TECHNICAL	MID ELEGANT		
Model Code				ZZT251L-ALPEKW	ZZT251R-ALMGKW	ZZT251L-ALMGKW	ZZT251R-ALPGKW
Major Dimensions & Vehicle Weights	Overall	Length	mm (in.)	4630 (182.3)	4630 (182.3)	4630 (182.3)	4630 (182.3)
		Width	mm (in.)	1760 (69.3)	1760 (69.3)	1760 (69.3)	1760 (69.3)
		Height	mm (in.)	1480 (58.3)	1480 (58.3)	1480 (58.3)	1480 (58.3)
	Wheel Base		mm (in.)	2700 (106.3)	2700 (106.3)	2700 (106.3)	2700 (106.3)
	Tread	Front	mm (in.)	1506 (59.3)	1506 (59.3)	1506 (59.3)	1506 (59.3)
		Rear	mm (in.)	1510 (59.4)	1510 (59.4)	1510 (59.4)	1510 (59.4)
	Room	Length	mm (in.)	2090 (82.3)	2090 (82.3)	2090 (82.3)	2090 (82.3)
		Width	mm (in.)	1485 (58.5)	1485 (58.5)	1485 (58.5)	1485 (58.5)
		Height	mm (in.)	1210 (47.6), 1160 (45.7)*1	1210 (47.6), 1160 (45.7)*1	1210 (47.6), 1160 (45.7)*1	1210 (47.6), 1160 (45.7)*1
	Overhang	Front	mm (in.)	910 (35.8)	910 (35.8)	910 (35.8)	910 (35.8)
		Rear	mm (in.)	1025 (40.4)	1025 (40.4)	1025 (40.4)	1025 (40.4)
	Min. Running Ground Clearance		mm (in.)	135 (5.3), 155 (6.1)*2	135 (5.3), 155 (6.1)*2	135 (5.3), 155 (6.1)*2	135 (5.3), 155 (6.1)*2
	Angle of Approach		degrees	13.1°, 14.5°*2	13.1°, 14.5°*2	13.1°, 14.5°*2	13.1°, 14.5°*2
	Angle of Departure		degrees	18.7°, 20.1°*2	18.7°, 20.1°*2	18.7°, 20.1°*2	18.7°, 20.1°*2
	Curb Weight	Front	kg (lb)	730 - 770 (1609 - 1698)	720 - 750 (1587 - 1653)	720 - 750 (1587 - 1653)	730 - 770 (1609 - 1698)
		Rear	kg (lb)	555 - 580 (1224 - 1279)	555 - 580 (1224 - 1279)	555 - 580 (1224 - 1279)	555 - 580 (1224 - 1279)
		Total	kg (lb)	1285 - 1350 (2833 - 2977)	1275 - 1330 (2811 - 2932)	1275 - 1330 (2811 - 2932)	1285 - 1350 (2833 - 2977)
	Gross Vehicle Weight	Front	kg (lb)	840 (1852)	840 (1852)	840 (1852)	840 (1852)
		Rear	kg (lb)	980 (2161)	980 (2161)	980 (2161)	980 (2161)
		Total	kg (lb)	1820 (4013)	1820 (4013)	1820 (4013)	1820 (4013)
	Fuel Tank Capacity		L (Imp.gal.)	60 (13.2)	60 (13.2)	60 (13.2)	60 (13.2)
	Luggage Compartment Capacity		m^3 (cu.ft.)	0.510 (18.0)	0.510 (18.0)	0.510 (18.0)	0.510 (18.0)
Performance	Max. Speed		km/h (mph)	195 (121)	200 (124)	200 (124)	195 (121)
	Max. Cruising Speed		km/h (mph)	—	—	—	—
	Acceleration	0 to 100 km/h	sec.	11.6	10.3	10.3	11.6
		0 to 400 m	sec.	17.9	17.1	17.1	17.9
	Max. Permissible Speed	1st Gear	km/h (mph)	59 (36)	51 (31)	51 (31)	59 (36)
		2nd Gear	km/h (mph)	109 (67)	95 (59)	95 (59)	109 (67)
		3rd Gear	km/h (mph)	169 (105)	139 (86)	139 (86)	169 (105)
		4th Gear	km/h (mph)	—	176 (109)	176 (109)	—
	Min. Turning Radius	Tire	m (ft.)	5.4 (17.7)	5.4 (17.7)	5.4 (17.7)	5.4 (17.7)
		Body	m (ft.)	5.75 (18.9)	5.75 (18.9)	5.75 (18.9)	5.75 (18.9)
Engine	Engine Type			1ZZ-FE	1ZZ-FE	1ZZ-FE	1ZZ-FE
	Valve Mechanism			16-Valve, DOHC	16-Valve, DOHC	16-Valve, DOHC	16-Valve, DOHC
	Bore × Stroke		mm (in.)	79.0 × 91.5 (3.11 × 3.60)	79.0 × 91.5 (3.11 × 3.60)	79.0 × 91.5 (3.11 × 3.60)	79.0 × 91.5 (3.11 × 3.60)
	Displacement		cm^3 (cu.in.)	1794 (109.5)	1794 (109.5)	1794 (109.5)	1794 (109.5)
	Compression Ratio			10.0	10.0	10.0	10.0
	Fuel System			EFI	EFI	EFI	EFI
	Research Octane No. or Cetane No. (Diesel)			95 or higher	95 or higher	95 or higher	95 or higher
	Max. Output (EEC)		kW/rpm	95/6000	95/6000	95/6000	95/6000
	Max. Torque (EEC)		N·m/rpm	170/4200	170/4200	170/4200	170/4200
Engine Electrical	Battery Capacity (5HR)		Voltage & Amp. hr.	12 -32, 40*3	12 -32, 40*3	12 -32, 40*3	12 -32, 40*3
	Alternator Output		Watts	1080	1080	1080	1080
	Starter Output		kW	1.3	1.3	1.3	1.3
Chassis	Clutch Type			—	Dry, Single Plate	Dry, Single Plate	—
	Transaxle Type			U341E	C250	C250	U341E
	Transmission Gear Ratio*5	In First		2.847	3.545	3.545	2.847
		In Second		1.552	1.904	1.904	1.552
		In Third		1.000	1.310	1.310	1.000
		In Fourth		0.700	1.031	1.031	0.700
		In Fifth		—	0.815	0.815	—
		In Reverse		2.343	3.250	3.250	2.343
	Differential Gear Ratio (Final)			4.237	3.941	3.941	4.237
	Brake Type	Front		Ventilated Disc	Ventilated Disc	Ventilated Disc	Ventilated Disc
		Rear		Solid Disc	Solid Disc	Solid Disc	Solid Disc
	Parking Brake Type			Drum	Drum	Drum	Drum
	Brake Booster Type and Size		in.	Tandem 8"+ 9"	Tandem 8"+ 9"	Tandem 8"+ 9"	Tandem 8"+ 9"
	Proportioning Valve Type			—	—	—	—
	Suspension Type	Front		MacPherson Strut	MacPherson Strut	MacPherson Strut	MacPherson Strut
		Rear		Double Wishbone	Double Wishbone	Double Wishbone	Double Wishbone
	Stabilizer Bar	Front		Standard	Standard	Standard	Standard
		Rear		Standard	Standard	Standard	Standard
	Steering Gear Type			Rack and Pinion	Rack and Pinion	Rack and Pinion	Rack and Pinion
	Steering Gear Ratio (Overall)			17.5, 17.3*2	17.5, 17.3*2	17.5, 17.3*2	17.5, 17.3*2
	Power Steering Type			EPS	EPS	EPS	EPS

*1: With Sun Roof
*2: Rough Road Pack
*3: Option
*4: Snow Mord Type
*5: Counter Gear Ratio Included (Only for Models with Automatic Transaxle)

EUROPE					
5-Door Liftback					
MID ELEGANT	MID TECHNICAL				MID ELEGANT
ZZT251L-ALPGKW	AZT250R-ALMEHW	AZT250L-ALMEHW	AZT250R-ALPEHW	AZT250L-ALPEHW	AZT250R-ALMGHW
4630 (182.3)	4630 (182.3)	4630 (182.3)	4630 (182.3)	4630 (182.3)	4630 (182.3)
1760 (69.3)	1760 (69.3)	1760 (69.3)	1760 (69.3)	1760 (69.3)	1760 (69.3)
1480 (58.3)	1480 (58.3)	1480 (58.3)	1480 (58.3)	1480 (58.3)	1480 (58.3)
2700 (106.3)	2700 (106.3)	2700 (106.3)	2700 (106.3)	2700 (106.3)	2700 (106.3)
1506 (59.3)	1506 (59.3)	1506 (59.3)	1506 (59.3)	1506 (59.3)	1506 (59.3)
1510 (59.4)	1510 (59.4)	1510 (59.4)	1510 (59.4)	1510 (59.4)	1510 (59.4)
2090 (82.3)	2090 (82.3)	2090 (82.3)	2090 (82.3)	2090 (82.3)	2090 (82.3)
1485 (58.5)	1485 (58.5)	1485 (58.5)	1485 (58.5)	1485 (58.5)	1485 (58.5)
1210 (47.6), 1160 (45.7)*1	1210 (47.6), 1160 (45.7)*1	1210 (47.6), 1160 (45.7)*1	1210 (47.6), 1160 (45.7)*1	1210 (47.6), 1160 (45.7)*1	1210 (47.6), 1160 (45.7)*1
910 (35.8)	910 (35.8)	910 (35.8)	910 (35.8)	910 (35.8)	910 (35.8)
1025 (40.4)	1025 (40.4)	1025 (40.4)	1025 (40.4)	1025 (40.4)	1025 (40.4)
135 (5.3), 155 (6.1)*2	135 (5.3), 155 (6.1)*2	135 (5.3), 155 (6.1)*2	135 (5.3), 155 (6.1)*2	135 (5.3), 155 (6.1)*2	135 (5.3), 155 (6.1)*2
13.1°, 14.5°*2	13.1°, 14.5°*2	13.1°, 14.5°*2	13.1°, 14.5°*2	13.1°, 14.5°*2	13.1°, 14.5°*2
18.7°, 20.1°*2	18.7°, 20.1°*2	18.7°, 20.1°*2	18.7°, 20.1°*2	18.7°, 20.1°*2	18.7°, 20.1°*2
730 - 770 (1609 - 1698)	770 - 800 (1698 - 1764)	770 - 800 (1698 - 1764)	800 - 835 (1764 - 1841)	800 - 835 (1764 - 1841)	770 - 800 (1698 - 1764)
555 - 580 (1224 - 1279)	565 - 580 (1246 - 1279)	565 - 580 (1246 - 1279)	565 - 585 (1246 - 1290)	565 - 585 (1246 - 1290)	565 - 580 (1246 - 1279)
1285 - 1350 (2833 - 2977)	1335 - 1380 (2944 - 3043)	1335 - 1380 (2944 - 3043)	1365 - 1420 (3010 - 3131)	1365 - 1420 (3010 - 3131)	1335 - 1380 (2944 - 3043)
840 (1852)	915 (2017)	915 (2017)	915 (2017)	915 (2017)	915 (2017)
980 (2161)	980 (2161)	980 (2161)	980 (2161)	980 (2161)	980 (2161)
1820 (4013)	1895 (4178)	1895 (4178)	1895 (4178)	1895 (4178)	1895 (4178)
60 (13.2)	60 (13.2)	60 (13.2)	60 (13.2)	60 (13.2)	60 (13.2)
0.510 (18.0)	0.510 (18.0)	0.510 (18.0)	0.510 (18.0)	0.510 (18.0)	0.510 (18.0)
195 (121)	210 (131)	210 (131)	205 (127)	205 (127)	210 (131)
—	—	—	—	—	—
11.6	9.4	9.4	11.1	11.1	9.4
17.9	16.6	16.6	17.6	17.6	16.6
59 (36)	56 (34)	56 (34)	63 (39)	63 (39)	56 (34)
109 (67)	96 (59)	96 (59)	114 (71)	114 (71)	96 (59)
169 (105)	149 (92)	149 (92)	177 (110)	177 (110)	149 (92)
—	193 (119)	193 (119)	—	—	193 (119)
5.4 (17.7)	5.6 (18.4)	5.6 (18.4)	5.6 (18.4)	5.6 (18.4)	5.6 (18.4)
5.75 (18.9)	5.995 (19.7)	5.995 (19.7)	5.995 (19.7)	5.995 (19.7)	5.995 (19.7)
1ZZ-FE	1AZ-FSE	1AZ-FSE	1AZ-FSE	1AZ-FSE	1AZ-FSE
16-Valve, DOHC	16-Valve, DOHC	16-Valve, DOHC	16-Valve, DOHC	16-Valve, DOHC	16-Valve, DOHC
79.0 × 91.5 (3.11 × 3.60)	86.0 × 86.0 (3.39 × 3.39)	86.0 × 86.0 (3.39 × 3.39)	86.0 × 86.0 (3.39 × 3.39)	86.0 × 86.0 (3.39 × 3.39)	86.0 × 86.0 (3.39 × 3.39)
1794 (109.5)	1998 (121.9)	1998 (121.9)	1998 (121.9)	1998 (121.9)	1998 (121.9)
10.0	11.0	11.0	11.0	11.0	11.0
EFI	EFI	EFI	EFI	EFI	EFI
95 or higher	95 or higher	95 or higher	95 or higher	95 or higher	95 or higher
95/6000	108/5700	108/5700	108/5700	108/5700	108/5700
170/4200	196/4000	196/4000	196/4000	196/4000	196/4000
12 -32, 40*3	12 -32, 40*3	12 -32, 40*3	12 - 48	12 - 48	12 -32, 48*3
1080	1200	1200	1200	1200	1200
1.3	1.3, 1.6*3	1.3, 1.6*3	1.6	1.6	1.3, 1.6*3
—	Dry, Single Plate	Dry, Single Plate	—	—	Dry, Single Plate
U341E	E354	E354	U241E*4	U241E*4	E354
2.847	3.538	3.538	3.943	3.943	3.538
1.552	2.054	2.054	2.197	2.197	2.054
1.000	1.333	1.333	1.413	1.413	1.333
0.700	1.028	1.028	1.020	1.020	1.028
—	0.820	0.820	—	—	0.820
2.343	3.583	3.583	3.145	3.145	3.583
4.237	3.684	3.684	2.923	2.923	3.684
Ventilated Disc	Ventilated Disc	Ventilated Disc	Ventilated Disc	Ventilated Disc	Ventilated Disc
Solid Disc	Solid Disc	Solid Disc	Solid Disc	Solid Disc	Solid Disc
Drum	Drum	Drum	Drum	Drum	Drum
Tandem 8"+ 9"	Tandem 8"+ 9"	Tandem 8"+ 9"	Tandem 8"+ 9"	Tandem 8"+ 9"	Tandem 8"+ 9"
—	—	—	—	—	—
MacPherson Strut	MacPherson Strut	MacPherson Strut	MacPherson Strut	MacPherson Strut	MacPherson Strut
Double Wishbone	Double Wishbone	Double Wishbone	Double Wishbone	Double Wishbone	Double Wishbone
Standard	Standard	Standard	Standard	Standard	Standard
Standard	Standard	Standard	Standard	Standard	Standard
Rack and Pinion	Rack and Pinion	Rack and Pinion	Rack and Pinion	Rack and Pinion	Rack and Pinion
17.5, 17.3*2	16.1, 15.9*2	16.1, 15.9*2	16.1, 15.9*2	16.1, 15.9*2	16.1, 15.9*2
EPS	Integral Type	Integral Type	Integral Type	Integral Type	Integral Type

Item \ Area				EUROPE			
Body Type				5-Door Liftback			
Vehicle Grade				MID ELEGANT			MID TECHNICAL
Model Code				AZT250L-ALMGHW	AZT250R-ALPGHW	AZT250L-ALPGHW	AZT251L-ALAEHW
Major Dimensions & Vehicle Weights	Overall	Length	mm (in.)	4630 (182.3)	4630 (182.3)	4630 (182.3)	4630 (182.3)
		Width	mm (in.)	1760 (69.3)	1760 (69.3)	1760 (69.3)	1760 (69.3)
		Height	mm (in.)	1480 (58.3)	1480 (58.3)	1480 (58.3)	1480 (58.3)
	Wheel Base		mm (in.)	2700 (106.3)	2700 (106.3)	2700 (106.3)	2700 (106.3)
	Tread	Front	mm (in.)	1506 (59.3)	1506 (59.3)	1506 (59.3)	1506 (59.3)
		Rear	mm (in.)	1510 (59.4)	1510 (59.4)	1510 (59.4)	1510 (59.4)
	Room	Length	mm (in.)	2090 (82.3)	2090 (82.3)	2090 (82.3)	2090 (82.3)
		Width	mm (in.)	1485 (58.5)	1485 (58.5)	1485 (58.5)	1485 (58.5)
		Height	mm (in.)	1210 (47.6), 1160 (45.7)*1	1210 (47.6), 1160 (45.7)*1	1210 (47.6), 1160 (45.7)*1	1210 (47.6), 1160 (45.7)*1
	Overhang	Front	mm (in.)	910 (35.8)	910 (35.8)	910 (35.8)	910 (35.8)
		Rear	mm (in.)	1025 (40.4)	1025 (40.4)	1025 (40.4)	1025 (40.4)
	Min. Running Ground Clearance		mm (in.)	135 (5.3), 155 (6.1)*2	135 (5.3), 155 (6.1)*2	135 (5.3), 155 (6.1)*2	135 (5.3), 155 (6.1)*2
	Angle of Approach		degrees	13.1°, 14.5°*2	13.1°, 14.5°*2	13.1°, 14.5°*2	13.1°, 14.5°*2
	Angle of Departure		degrees	18.7°, 20.1°*2	18.7°, 20.1°*2	18.7°, 20.1°*2	18.7°, 20.1°*2
	Curb Weight	Front	kg (lb)	770 - 800 (1698 - 1764)	800 - 835 (1764 - 1841)	800 - 835 (1764 - 1841)	820 - 850 (1806 - 1872)
		Rear	kg (lb)	565 - 580 (1246 - 1279)	565 - 585 (1246 - 1290)	565 - 585 (1246 - 1290)	560 - 575 (1233 - 1267)
		Total	kg (lb)	1335 - 1380 (2944 - 3043)	1365 - 1420 (3010 - 3131)	1365 - 1420 (3010 - 3131)	1380 - 1435 (3040 - 3161)
	Gross Vehicle Weight	Front	kg (lb)	915 (2017)	915 (2017)	915 (2017)	935 (2059)
		Rear	kg (lb)	980 (2161)	980 (2161)	980 (2161)	970 (2137)
		Total	kg (lb)	1895 (4178)	1895 (4178)	1895 (4178)	1905 (4196)
	Fuel Tank Capacity		L (Imp.gal.)	60 (13.2)	60 (13.2)	60 (13.2)	60 (13.2)
	Luggage Compartment Capacity		m^3 (cu.ft.)	0.510 (18.0)	0.510 (18.0)	0.510 (18.0)	0.510 (18.0)
Performance	Max. Speed		km/h (mph)	210 (131)	205 (127)	205 (127)	220 (138)
	Max. Cruising Speed		km/h (mph)	—	—	—	—
	Acceleration	0 to 100 km/h	sec.	9.4	11.1	11.1	9.3
		0 to 400 m	sec.	16.6	17.6	17.6	16.7
	Max. Permissible Speed	1st Gear	km/h (mph)	56 (34)	63 (39)	63 (39)	45 (27)
		2nd Gear	km/h (mph)	96 (59)	114 (71)	114 (71)	84 (52)
		3rd Gear	km/h (mph)	149 (92)	177 (110)	177 (110)	128 (79)
		4th Gear	km/h (mph)	193 (119)	—	—	176 (109)
	Min. Turning Radius	Tire	m (ft.)	5.6 (18.4)	5.6 (18.4)	5.6 (18.4)	5.6 (18.4)
		Body	m (ft.)	5.995 (19.7)	5.995 (19.7)	5.995 (19.7)	5.995 (19.7)
Engine	Engine Type			1AZ-FSE	1AZ-FSE	1AZ-FSE	2AZ-FSE
	Valve Mechanism			16-Valve, DOHC	16-Valve, DOHC	16-Valve, DOHC	16-Valve, DOHC
	Bore × Stroke		mm (in.)	86.0 × 86.0 (3.39 × 3.39)	86.0 × 86.0 (3.39 × 3.39)	86.0 × 86.0 (3.39 × 3.39)	88.5 × 96.0 (3.48 × 3.78)
	Displacement		cm^3 (cu.in.)	1998 (121.9)	1998 (121.9)	1998 (121.9)	2362 (144.2)
	Compression Ratio			11.0	11.0	11.0	11.0
	Fuel System			EFI	EFI	EFI	EFI
	Research Octane No. or Cetane No. (Diesel)			95 or higher	95 or higher	95 or higher	95 or higher
	Max. Output (EEC)		kW/rpm	108/5700	108/5700	108/5700	120/5800
	Max. Torque (EEC)		N·m/rpm	196/4000	196/4000	196/4000	230/4000
Engine Electrical	Battery Capacity (5HR)		Voltage & Amp. hr.	12 -32, 48*3	12 - 48	12 - 48	12 - 48
	Alternator Output		Watts	1200	1200	1200	1200
	Starter Output		kW	1.3, 1.6*3	1.6	1.6	1.6
Chassis	Clutch Type			Dry, Single Plate	—	—	—
	Transaxle Type			E354	U241E*4	U241E*4	U151E
	Transmission Gear Ratio*5	In First		3.538	3.943	3.943	4.235
		In Second		2.054	2.197	2.197	2.360
		In Third		1.333	1.413	1.413	1.517
		In Fourth		1.028	1.020	1.020	1.047
		In Fifth		0.820	—	—	0.756
		In Reverse		3.583	3.145	3.145	3.378
	Differential Gear Ratio (Final)			3.684	2.923	2.923	3.478
	Brake Type	Front		Ventilated Disc	Ventilated Disc	Ventilated Disc	Ventilated Disc
		Rear		Solid Disc	Solid Disc	Solid Disc	Solid Disc
	Parking Brake Type			Drum	Drum	Drum	Drum
	Brake Booster Type and Size		in.	Tandem 8"+ 9"	Tandem 8"+ 9"	Tandem 8"+ 9"	Tandem 8"+ 9"
	Proportioning Valve Type			—	—	—	—
	Suspension Type	Front		MacPherson Strut	MacPherson Strut	MacPherson Strut	MacPherson Strut
		Rear		Double Wishbone	Double Wishbone	Double Wishbone	Double Wishbone
	Stabilizer Bar	Front		Standard	Standard	Standard	Standard
		Rear		Standard	Standard	Standard	Standard
	Steering Gear Type			Rack and Pinion	Rack and Pinion	Rack and Pinion	Rack and Pinion
	Steering Gear Ratio (Overall)			16.1, 15.9*2	16.1, 15.9*2	16.1, 15.9*2	16.1, 15.9*2
	Power Steering Type			Integral Type	Integral Type	Integral Type	Integral Type

*1: With Sun Roof
*2: Rough Road Pack
*3: Option
*4: Snow Mord Type
*5: Counter Gear Ratio Included (Only for Models with Automatic Transaxle)

EUROPE					
5-Door Liftback					
MID TECHNICAL		ENTRY		MID TECHNICAL	
AZT251R-ALAGHW	AZT251L-ALAGHW	CDT250R-ALMNYW	CDT250L-ALMNYW	CDT250R-ALMEYW	CDT250L-ALMEYW
4630 (182.3)	4630 (182.3)	4630 (182.3)	4630 (182.3)	4630 (182.3)	4630 (182.3)
1760 (69.3)	1760 (69.3)	1760 (69.3)	1760 (69.3)	1760 (69.3)	1760 (69.3)
1480 (58.3)	1480 (58.3)	1480 (58.3)	1480 (58.3)	1480 (58.3)	1480 (58.3)
2700 (106.3)	2700 (106.3)	2700 (106.3)	2700 (106.3)	2700 (106.3)	2700 (106.3)
1506 (59.3)	1506 (59.3)	1506 (59.3)	1506 (59.3)	1506 (59.3)	1506 (59.3)
1510 (59.4)	1510 (59.4)	1510 (59.4)	1510 (59.4)	1510 (59.4)	1510 (59.4)
2090 (82.3)	2090 (82.3)	2090 (82.3)	2090 (82.3)	2090 (82.3)	2090 (82.3)
1485 (58.5)	1485 (58.5)	1485 (58.5)	1485 (58.5)	1485 (58.5)	1485 (58.5)
1210 (47.6), 1160 (45.7)*1	1210 (47.6), 1160 (45.7)*1	1210 (47.6), 1160 (45.7)*1	1210 (47.6), 1160 (45.7)*1	1210 (47.6), 1160 (45.7)*1	1210 (47.6), 1160 (45.7)*1
910 (35.8)	910 (35.8)	910 (35.8)	910 (35.8)	910 (35.8)	910 (35.8)
1025 (40.4)	1025 (40.4)	1025 (40.4)	1025 (40.4)	1025 (40.4)	1025 (40.4)
135 (5.3), 155 (6.1)*2	135 (5.3), 155 (6.1)*2	135 (5.3), 155 (6.1)*2	135 (5.3)	135 (5.3), 155 (6.1)*2	135 (5.3)
13.1°, 14.5°*2	13.1°, 14.5°*2	13.1°, 14.5°*2	13.1°	13.1°, 14.5°*2	13.1°
18.7°, 20.1°*2	18.7°, 20.1°*2	18.7°, 20.1°*2	18.7°	18.7°, 20.1°*2	18.7°
820 - 850 (1806 - 1872)	820 - 850 (1806 - 1872)	845 - 895 (1863 - 1973)	845 - 895 (1863 - 1973)	845 - 895 (1863 - 1973)	845 - 895 (1863 - 1973)
560 - 570 (1233 - 1256)	560 - 570 (1233 - 1256)	555 - 565 (1224 - 1246)	555 - 565 (1224 - 1246)	555 - 570 (1224 - 1257)	555 - 570 (1224 - 1257)
1380 - 1445 (3040 - 3183)	1380 - 1445 (3040 - 3183)	1400 - 1460 (3087 - 3219)	1400 - 1460 (3087 - 3219)	1400 - 1465 (3087 - 3230)	1400 - 1465 (3087 - 3230)
935 (2059)	935 (2059)	985 (2172)	985 (2172)	985 (2172)	985 (2172)
970 (2137)	970 (2137)	985 (2172)	985 (2172)	985 (2172)	985 (2172)
1905 (4196)	1905 (4196)	1970 (4344)	1970 (4344)	1970 (4344)	1970 (4344)
60 (13.2)	60 (13.2)	60 (13.2)	60 (13.2)	60 (13.2)	60 (13.2)
0.510 (18.0)	0.510 (18.0)	0.510 (18.0)	0.510 (18.0)	0.510 (18.0)	0.510 (18.0)
220 (138)	220 (138)	195 (121)	195 (121)	195 (121)	195 (121)
—	—	—	—	—	—
9.3	9.3	11.2	11.2	11.2	11.2
16.7	16.7	17.7	17.7	17.7	17.7
45 (27)	45 (27)	45 (27)	45 (27)	45 (27)	45 (27)
84 (52)	84 (52)	84 (52)	84 (52)	84 (52)	84 (52)
128 (79)	128 (79)	128 (79)	128 (79)	128 (79)	128 (79)
176 (109)	176 (109)	176 (109)	176 (109)	176 (109)	176 (109)
5.6 (18.4)	5.6 (18.4)	5.6 (18.4)	5.6 (18.4)	5.6 (18.4)	5.6 (18.4)
5.995 (19.7)	5.995 (19.7)	5.995 (19.7)	5.995 (19.7)	5.995 (19.7)	5.995 (19.7)
2AZ-FSE	2AZ-FSE	1CD-FTV	1CD-FTV	1CD-FTV	1CD-FTV
16-Valve, DOHC	16-Valve, DOHC	16-Valve, DOHC	16-Valve, DOHC	16-Valve, DOHC	16-Valve, DOHC
88.5 × 96.0 (3.48 × 3.78)	88.5 × 96.0 (3.48 × 3.78)	82.2 × 94.0 (3.24 × 3.70)	82.2 × 94.0 (3.24 × 3.70)	82.2 × 94.0 (3.24 × 3.70)	82.2 × 94.0 (3.24 × 3.70)
2362 (144.2)	2362 (144.2)	1995 (121.7)	1995 (121.7)	1995 (121.7)	1995 (121.7)
11.0	11.0	17.8	17.8	17.8	17.8
EFI	EFI	Common-Rail Type	Common-Rail Type	Common-Rail Type	Common-Rail Type
95 or higher	95 or higher	48 or higher	48 or higher	48 or higher	48 or higher
120/5800	120/5800	85/3600	85/3600	85/3600	85/3600
230/4000	230/4000	280/2000-2200	280/2000-2200	280/2000-2200	280/2000-2200
12 - 48	12 - 48	12 - 60	12 - 60	12 - 60	12 - 60
1200	1200	1200	1200	1200	1200
1.6	1.6	2.0	2.0	2.0	2.0
—	—	Dry, Single Plate	Dry, Single Plate	Dry, Single Plate	Dry, Single Plate
U151E	U151E	E357	E357	E357	E357
4.235	4.235	3.538	3.538	3.538	3.538
2.360	2.360	1.913	1.913	1.913	1.913
1.517	1.517	1.258	1.258	1.258	1.258
1.047	1.047	0.918	0.918	0.918	0.918
0.756	0.756	0.690	0.690	0.690	0.690
3.378	3.378	3.583	3.583	3.583	3.583
3.478	3.478	3.684	3.684	3.684	3.684
Ventilated Disc	Ventilated Disc	Ventilated Disc	Ventilated Disc	Ventilated Disc	Ventilated Disc
Solid Disc	Solid Disc	Solid Disc	Solid Disc	Solid Disc	Solid Disc
Drum	Drum	Drum	Drum	Drum	Drum
Tandem 8"+ 9"	Tandem 8"+ 9"	Tandem 8"+ 9"	Tandem 8"+ 9"	Tandem 8"+ 9"	Tandem 8"+ 9"
—	—	—	—	—	—
MacPherson Strut	MacPherson Strut	MacPherson Strut	MacPherson Strut	MacPherson Strut	MacPherson Strut
Double Wishbone	Double Wishbone	Double Wishbone	Double Wishbone	Double Wishbone	Double Wishbone
Standard	Standard	Standard	Standard	Standard	Standard
Standard	Standard	Standard	Standard	Standard	Standard
Rack and Pinion	Rack and Pinion	Rack and Pinion	Rack and Pinion	Rack and Pinion	Rack and Pinion
16.1, 15.9*2	16.1, 15.9*2	16.1, 15.9*2	16.1	16.1, 15.9*2	16.1
Integral Type	Integral Type	Integral Type	Integral Type	Integral Type	Integral Type

AP

Item \ Area				EUROPE			
Body Type				5-Door Liftback		5-Door Wagon	
Vehicle Grade				MID ELEGANT		ENTRY	
Model Code				CDT250R-ALMGYW	CDT250L-ALMGYW	ZZT250L-AWMNKW	ZZT251R-AWMNKW
Major Dimensions & Vehicle Weights	Overall	Length	mm (in.)	4630 (182.3)	4630 (182.3)	4700 (185.0)	4700 (185.0)
		Width	mm (in.)	1760 (69.3)	1760 (69.3)	1760 (69.3)	1760 (69.3)
		Height	mm (in.)	1480 (58.3)	1480 (58.3)	1525 (60.0)	1525 (60.0)
	Wheel Base		mm (in.)	2700 (106.3)	2700 (106.3)	2700 (106.3)	2700 (106.3)
	Tread	Front	mm (in.)	1506 (59.3)	1506 (59.3)	1506 (59.3)	1506 (59.3)
		Rear	mm (in.)	1510 (59.4)	1510 (59.4)	1510 (59.4)	1510 (59.4)
	Room	Length	mm (in.)	2090 (82.3)	2090 (82.3)	2090 (82.3)	2090 (82.3)
		Width	mm (in.)	1485 (58.5)	1485 (58.5)	1485 (58.5)	1485 (58.5)
		Height	mm (in.)	1210 (47.6), 1160 (45.7)*1	1210 (47.6), 1160 (45.7)*1	1210 (47.6), 1160 (45.7)*1	1210 (47.6), 1160 (45.7)*1
	Overhang	Front	mm (in.)	910 (35.8)	910 (35.8)	910 (35.8)	910 (35.8)
		Rear	mm (in.)	1025 (40.4)	1025 (40.4)	1095 (43.1)	1095 (43.1)
	Min. Running Ground Clearance		mm (in.)	135 (5.3), 155 (6.1)*2	135 (5.3)	135 (5.3), 155 (6.1)*2	135 (5.3), 155 (6.1)*2
	Angle of Approach		degrees	13.1°, 14.5°*2	13.1°	13.1°, 14.5°*2	13.1°, 14.5°*2
	Angle of Departure		degrees	18.7°, 20.1°*2	18.7°	18°, 19.2°*2	18°, 19.2°*2
	Curb Weight	Front	kg (lb)	845 - 895 (1863 - 1973)	845 - 895 (1863 - 1973)	715 - 750 (1576 - 1653)	715 - 750 (1576 - 1653)
		Rear	kg (lb)	555 - 570 (1224 - 1257)	555 - 570 (1224 - 1257)	580 - 590 (1279 - 1301)	580 - 595 (1279 - 1312)
		Total	kg (lb)	1400 - 1465 (3087 - 3230)	1400 - 1465 (3087 - 3230)	1295 - 1340 (2855 - 2954)	1295 - 1345 (2855 - 2965)
	Gross Vehicle Weight	Front	kg (lb)	985 (2172)	985 (2172)	840 (1852)	840 (1852)
		Rear	kg (lb)	985 (2172)	985 (2172)	980 (2161)	980 (2161)
		Total	kg (lb)	1970 (4344)	1970 (4344)	1820 (4013)	1820 (4013)
	Fuel Tank Capacity		L (Imp.gal.)	60 (13.2)	60 (13.2)	60 (13.2)	60 (13.2)
	Luggage Compartment Capacity		m^3 (cu.ft.)	0.510 (18.0)	0.510 (18.0)	0.520 (18.4)	0.520 (18.4)
Performance	Max. Speed		km/h (mph)	195 (121)	195 (121)	195 (121)	200 (124)
	Max. Cruising Speed		km/h (mph)	—	—	—	—
	Acceleration	0 to 100 km/h	sec.	11.2	11.2	12.2	10.5
		0 to 400 m	sec.	17.7	17.7	18.2	17.2
	Max. Permissible Speed	1st Gear	km/h (mph)	45 (27)	45 (27)	47 (29)	51 (31)
		2nd Gear	km/h (mph)	84 (52)	84 (52)	87 (54)	95 (59)
		3rd Gear	km/h (mph)	128 (79)	128 (79)	127 (78)	139 (86)
		4th Gear	km/h (mph)	176 (109)	176 (109)	172 (106)	176 (109)
	Min. Turning Radius	Tire	m (ft.)	5.6 (18.4)	5.6 (18.4)	5.4 (17.7)	5.4 (17.7)
		Body	m (ft.)	5.995 (19.7)	5.995 (19.7)	5.75 (18.9)	5.75 (18.9)
Engine	Engine Type			1CD-FTV	1CD-FTV	3ZZ-FE	1ZZ-FE
	Valve Mechanism			16-Valve, DOHC	16-Valve, DOHC	16-Valve, DOHC	16-Valve, DOHC
	Bore × Stroke		mm (in.)	82.2 × 94.0 (3.24 × 3.70)	82.2 × 94.0 (3.24 × 3.70)	79.0 × 81.5 (3.11 × 3.21)	79.0 × 91.5 (3.11 × 3.60)
	Displacement		cm^3 (cu.in.)	1995 (121.7)	1995 (121.7)	1598 (97.5)	1794 (109.5)
	Compression Ratio			17.8	17.8	10.5	10.0
	Fuel System			Common-Rail Type	Common-Rail Type	EFI	EFI
	Research Octane No. or Cetane No. (Diesel)			48 or higher	48 or higher	95 or higher	95 or higher
	Max. Output (EEC)		kW/rpm	85/3600	85/3600	81/6000	95/6000
	Max. Torque (EEC)		N·m/rpm	280/2000-2200	280/2000-2200	150/3800	170/4200
Engine Electrical	Battery Capacity (5HR)		Voltage & Amp. hr.	12 - 60	12 - 60	12 -32, 48*3	12 -32, 48*3
	Alternator Output		Watts	1200	1200	1080	1080
	Starter Output		kW	2.0	2.0	1.3	1.3
Chassis	Clutch Type			Dry, Single Plate	Dry, Single Plate	Dry, Single Plate	Dry, Single Plate
	Transaxle Type			E357	E357	C50	C250
	Transmission Gear Ratio*4	In First		3.538	3.538	3.545	3.545
		In Second		1.913	1.913	1.904	1.904
		In Third		1.258	1.258	1.310	1.310
		In Fourth		0.918	0.918	0.969	1.031
		In Fifth		0.690	0.690	0.815	0.815
		In Reverse		3.583	3.583	3.250	3.250
	Differential Gear Ratio (Final)			3.684	3.684	4.312	3.941
	Brake Type	Front		Ventilated Disc	Ventilated Disc	Ventilated Disc	Ventilated Disc
		Rear		Solid Disc	Solid Disc	Solid Disc	Solid Disc
	Parking Brake Type			Drum	Drum	Drum	Drum
	Brake Booster Type and Size		in.	Tandem 8"+ 9"	Tandem 8"+ 9"	Tandem 8"+ 9"	Tandem 8"+ 9"
	Proportioning Valve Type			—	—	—	—
	Suspension Type	Front		MacPherson Strut	MacPherson Strut	MacPherson Strut	MacPherson Strut
		Rear		Double Wishbone	Double Wishbone	Double Wishbone	Double Wishbone
	Stabilizer Bar	Front		Standard	Standard	Standard	Standard
		Rear		Standard	Standard	Standard	Standard
	Steering Gear Type			Rack and Pinion	Rack and Pinion	Rack and Pinion	Rack and Pinion
	Steering Gear Ratio (Overall)			16.1, 15.9*2	16.1	17.5, 17.3*2	17.5, 17.3*2
	Power Steering Type			Integral Type	Integral Type	EPS	EPS

*1: With Sun Roof
*2: Rough Road Pack
*3: Option
*4: Counter Gear Ratio Included (Only for Models with Automatic Transaxle)

EUROPE					
5-Door Wagon					
ENTRY		MID TECHNICAL			MID ELEGANT
ZZT251L-AWMNKW	ZZT251L-AWPNKW	ZZT251R-AWMEKW	ZZT251L-AWMEKW	ZZT251L-AWPEKW	ZZT251R-AWMGKW
4700 (185.0)	4700 (185.0)	4700 (185.0)	4700 (185.0)	4700 (185.0)	4700 (185.0)
1760 (69.3)	1760 (69.3)	1760 (69.3)	1760 (69.3)	1760 (69.3)	1760 (69.3)
1525 (60.0)	1525 (60.0)	1525 (60.0)	1525 (60.0)	1525 (60.0)	1525 (60.0)
2700 (106.3)	2700 (106.3)	2700 (106.3)	2700 (106.3)	2700 (106.3)	2700 (106.3)
1506 (59.3)	1506 (59.3)	1506 (59.3)	1506 (59.3)	1506 (59.3)	1506 (59.3)
1510 (59.4)	1510 (59.4)	1510 (59.4)	1510 (59.4)	1510 (59.4)	1510 (59.4)
2090 (82.3)	2090 (82.3)	2090 (82.3)	2090 (82.3)	2090 (82.3)	2090 (82.3)
1485 (58.5)	1485 (58.5)	1485 (58.5)	1485 (58.5)	1485 (58.5)	1485 (58.5)
1210 (47.6), 1160 (45.7)*1	1210 (47.6), 1160 (45.7)*1	1210 (47.6), 1160 (45.7)*1	1210 (47.6), 1160 (45.7)*1	1210 (47.6), 1160 (45.7)*1	1210 (47.6), 1160 (45.7)*1
910 (35.8)	910 (35.8)	910 (35.8)	910 (35.8)	910 (35.8)	910 (35.8)
1095 (43.1)	1095 (43.1)	1095 (43.1)	1095 (43.1)	1095 (43.1)	1095 (43.1)
135 (5.3), 155 (6.1)*2	135 (5.3), 155 (6.1)*2	135 (5.3), 155 (6.1)*2	135 (5.3), 155 (6.1)*2	135 (5.3), 155 (6.1)*2	135 (5.3), 155 (6.1)*2
13.1°, 14.5°*2	13.1°, 14.5°*2	13.1°, 14.5°*2	13.1°, 14.5°*2	13.1°, 14.5°*2	13.1°, 14.5°*2
18°, 19.2°*2	18°, 19.2°*2	18°, 19.2°*2	18°, 19.2°*2	18°, 19.2°*2	18°, 19.2°*2
715 - 750 (1576 - 1653)	745 - 775 (1642 - 1709)	715 - 750 (1576 - 1653)	715 - 750 (1576 - 1653)	745 - 775 (1642 - 1709)	715 - 750 (1576 - 1653)
580 - 595 (1279 - 1312)	580 - 600 (1279 - 1323)	580 - 595 (1279 - 1312)	580 - 595 (1279 - 1312)	580 - 600 (1279 - 1323)	580 - 595 (1279 - 1312)
1295 - 1345 (2855 - 2965)	1325 - 1375 (2921 - 3032)	1295 - 1345 (2855 - 2965)	1295 - 1345 (2855 - 2965)	1325 - 1375 (2921 - 3032)	1295 - 1345 (2855 - 2965)
840 (1852)	840 (1852)	840 (1852)	840 (1852)	840 (1852)	840 (1852)
980 (2161)	980 (2161)	980 (2161)	980 (2161)	980 (2161)	980 (2161)
1820 (4013)	1820 (4013)	1820 (4013)	1820 (4013)	1820 (4013)	1820 (4013)
60 (13.2)	60 (13.2)	60 (13.2)	60 (13.2)	60 (13.2)	60 (13.2)
0.520 (18.4)	0.520 (18.4)	0.520 (18.4)	0.520 (18.4)	0.520 (18.4)	0.520 (18.4)
200 (124)	195 (121)	200 (124)	200 (124)	195 (121)	200 (124)
—	—	—	—	—	—
10.5	11.8	10.5	10.5	11.8	10.5
17.2	18.0	17.2	17.2	18.0	17.2
51 (31)	59 (36)	51 (31)	51 (31)	59 (36)	51 (31)
95 (59)	109 (67)	95 (59)	95 (59)	109 (67)	95 (59)
139 (86)	169 (105)	139 (86)	139 (86)	169 (105)	139 (86)
176 (109)	—	176 (109)	176 (109)	—	176 (109)
5.4 (17.7)	5.4 (17.7)	5.4 (17.7)	5.4 (17.7)	5.4 (17.7)	5.4 (17.7)
5.75 (18.9)	5.75 (18.9)	5.75 (18.9)	5.75 (18.9)	5.75 (18.9)	5.75 (18.9)
1ZZ-FE	1ZZ-FE	1ZZ-FE	1ZZ-FE	1ZZ-FE	1ZZ-FE
16-Valve, DOHC	16-Valve, DOHC	16-Valve, DOHC	16-Valve, DOHC	16-Valve, DOHC	16-Valve, DOHC
79.0 × 91.5 (3.11 × 3.60)	79.0 × 91.5 (3.11 × 3.60)	79.0 × 91.5 (3.11 × 3.60)	79.0 × 91.5 (3.11 × 3.60)	79.0 × 91.5 (3.11 × 3.60)	79.0 × 91.5 (3.11 × 3.60)
1794 (109.5)	1794 (109.5)	1794 (109.5)	1794 (109.5)	1794 (109.5)	1794 (109.5)
10.0	10.0	10.0	10.0	10.0	10.0
EFI	EFI	EFI	EFI	EFI	EFI
95 or higher	95 or higher	95 or higher	95 or higher	95 or higher	95 or higher
95/6000	95/6000	95/6000	95/6000	95/6000	95/6000
170/4200	170/4200	170/4200	170/4200	170/4200	170/4200
12 -32, 48*3	12 -32, 48*3	12 -32, 48*3	12 -32, 48*3	12 -32, 48*3	12 -32, 48*3
1080	1080	1080	1080	1080	1080
1.3	1.3	1.3	1.3	1.3	1.3
Dry, Single Plate	—	Dry, Single Plate	Dry, Single Plate	—	Dry, Single Plate
C250	U341E	C250	C250	U341E	C250
3.545	2.847	3.545	3.545	2.847	3.545
1.904	1.552	1.904	1.904	1.552	1.904
1.310	1.000	1.310	1.310	1.000	1.310
1.031	0.700	1.031	1.031	0.700	1.031
0.815	—	0.815	0.815	—	0.815
3.250	2.343	3.250	3.250	2.343	3.250
3.941	4.237	3.941	3.941	4.237	3.941
Ventilated Disc	Ventilated Disc	Ventilated Disc	Ventilated Disc	Ventilated Disc	Ventilated Disc
Solid Disc	Solid Disc	Solid Disc	Solid Disc	Solid Disc	Solid Disc
Drum	Drum	Drum	Drum	Drum	Drum
Tandem 8"+ 9"	Tandem 8"+ 9"	Tandem 8"+ 9"	Tandem 8"+ 9"	Tandem 8"+ 9"	Tandem 8"+ 9"
—	—	—	—	—	—
MacPherson Strut	MacPherson Strut	MacPherson Strut	MacPherson Strut	MacPherson Strut	MacPherson Strut
Double Wishbone	Double Wishbone	Double Wishbone	Double Wishbone	Double Wishbone	Double Wishbone
Standard	Standard	Standard	Standard	Standard	Standard
Standard	Standard	Standard	Standard	Standard	Standard
Rack and Pinion	Rack and Pinion	Rack and Pinion	Rack and Pinion	Rack and Pinion	Rack and Pinion
17.5, 17.3*2	17.5, 17.3*2	17.5, 17.3*2	17.5, 17.3*2	17.5, 17.3*2	17.5, 17.3*2
EPS	EPS	EPS	EPS	EPS	EPS

Item \ Area				EUROPE			
Body Type				5-Door Wagon			
Vehicle Grade				MID ELEGANT		MID TECHNICAL	MID ELEGANT
Model Code				ZZT251L-AWMGKW	ZZT251L-AWPGKW	AZT250L-AWPEKW	AZT250L-AWPGKW
Major Dimensions & Vehicle Weights	Overall	Length	mm (in.)	4700 (185.0)	4700 (185.0)	4700 (185.0)	4700 (185.0)
		Width	mm (in.)	1760 (69.3)	1760 (69.3)	1760 (69.3)	1760 (69.3)
		Height	mm (in.)	1525 (60.0)	1525 (60.0)	1525 (60.0)	1525 (60.0)
	Wheel Base		mm (in.)	2700 (106.3)	2700 (106.3)	2700 (106.3)	2700 (106.3)
	Tread	Front	mm (in.)	1506 (59.3)	1506 (59.3)	1506 (59.3)	1506 (59.3)
		Rear	mm (in.)	1510 (59.4)	1510 (59.4)	1510 (59.4)	1510 (59.4)
	Room	Length	mm (in.)	2090 (82.3)	2090 (82.3)	2090 (82.3)	2090 (82.3)
		Width	mm (in.)	1485 (58.5)	1485 (58.5)	1485 (58.5)	1485 (58.5)
		Height	mm (in.)	1210 (47.6), 1160 (45.7)*1	1210 (47.6), 1160 (45.7)*1	1210 (47.6), 1160 (45.7)*1	1210 (47.6), 1160 (45.7)*1
	Overhang	Front	mm (in.)	910 (35.8)	910 (35.8)	910 (35.8)	910 (35.8)
		Rear	mm (in.)	1095 (43.1)	1095 (43.1)	1095 (43.1)	1095 (43.1)
	Min. Running Ground Clearance		mm (in.)	135 (5.3), 155 (6.1)*2	135 (5.3), 155 (6.1)*2	135 (5.3), 155 (6.1)*2	135 (5.3), 155 (6.1)*2
	Angle of Approach		degrees	13.1°, 14.5°*2	13.1°, 14.5°*2	13.1°, 14.5°*2	13.1°, 14.5°*2
	Angle of Departure		degrees	18°, 19.2°*2	18°, 19.2°*2	18°, 19.2°*2	18°, 19.2°*2
	Curb Weight	Front	kg (lb)	715 - 750 (1576 - 1653)	745 - 775 (1642 - 1709)	795 - 830 (1753 - 1830)	795 - 830 (1753 - 1830)
		Rear	kg (lb)	580 - 595 (1279 - 1312)	580 - 600 (1279 - 1323)	570 - 590 (1257 - 1301)	570 - 590 (1257 - 1301)
		Total	kg (lb)	1295 - 1345 (2855 - 2965)	1325 - 1375 (2921 - 3032)	1365 - 1420 (3010 - 3131)	1365 - 1420 (3010 - 3131)
	Gross Vehicle Weight	Front	kg (lb)	840 (1852)	840 (1852)	915 (2017)	915 (2017)
		Rear	kg (lb)	980 (2161)	980 (2161)	975 (2150)	975 (2150)
		Total	kg (lb)	1820 (4013)	1820 (4013)	1890 (4167)	1890 (4167)
	Fuel Tank Capacity		L (Imp.gal.)	60 (13.2)	60 (13.2)	60 (13.2)	60 (13.2)
	Luggage Compartment Capacity		m^3 (cu.ft.)	0.520 (18.4)	0.520 (18.4)	0.520 (18.4)	0.520 (18.4)
Performance	Max. Speed		km/h (mph)	200 (124)	195 (121)	185 (115)	185 (115)
	Max. Cruising Speed		km/h (mph)	—	—	—	—
	Acceleration	0 to 100 km/h	sec.	10.5	11.8	11.3	11.3
		0 to 400 m	sec.	17.2	18.0	17.7	17.7
	Max. Permissible Speed	1st Gear	km/h (mph)	51 (31)	59 (36)	62 (38)	62 (38)
		2nd Gear	km/h (mph)	95 (59)	109 (67)	111 (68)	111 (68)
		3rd Gear	km/h (mph)	139 (86)	169 (105)	174 (108)	174 (108)
		4th Gear	km/h (mph)	176 (109)	—	—	—
	Min. Turning Radius	Tire	m (ft.)	5.4 (17.7)	5.4 (17.7)	5.6 (18.4)	5.6 (18.4)
		Body	m (ft.)	5.75 (18.9)	5.75 (18.9)	5.995 (19.7)	5.995 (19.7)
Engine	Engine Type			1ZZ-FE	1ZZ-FE	1AZ-FE	1AZ-FE
	Valve Mechanism			16-Valve, DOHC	16-Valve, DOHC	16-Valve, DOHC	16-Valve, DOHC
	Bore × Stroke		mm (in.)	79.0 × 91.5 (3.11 × 3.60)	79.0 × 91.5 (3.11 × 3.60)	86.0 × 86.0 (3.39 × 3.39)	86.0 × 86.0 (3.39 × 3.39)
	Displacement		cm^3 (cu.in.)	1794 (109.5)	1794 (109.5)	1998 (121.9)	1998 (121.9)
	Compression Ratio			10.0	10.0	9.8	9.8
	Fuel System			EFI	EFI	EFI	EFI
	Research Octane No. or Cetane No. (Diesel)			95 or higher	95 or higher	95 or higher	95 or higher
	Max. Output (EEC)		kW/rpm	95/6000	95/6000	108/6000	108/6000
	Max. Torque (EEC)		N·m/rpm	170/4200	170/4200	192/4000	192/4000
Engine Electrical	Battery Capacity (5HR)		Voltage & Amp. hr.	12 -32, 48*3	12 -32, 48*3	12 -32, 48*3	12 -32, 48*3
	Alternator Output		Watts	1080	1080	1200	1200
	Starter Output		kW	1.3	1.3	1.3	1.3
Chassis	Clutch Type			Dry, Single Plate	—	—	—
	Transaxle Type			C250	U341E	U241E	U241E
	Transmission Gear Ratio*5	In First		3.545	2.847	3.943	3.943
		In Second		1.904	1.552	2.197	2.197
		In Third		1.310	1.000	1.413	1.413
		In Fourth		1.031	0.700	1.020	1.020
		In Fifth		0.815	—	—	—
		In Reverse		3.250	2.343	3.145	3.145
	Differential Gear Ratio (Final)			3.941	4.237	2.923	2.923
	Brake Type	Front		Ventilated Disc	Ventilated Disc	Ventilated Disc	Ventilated Disc
		Rear		Solid Disc	Solid Disc	Solid Disc	Solid Disc
	Parking Brake Type			Drum	Drum	Drum	Drum
	Brake Booster Type and Size		in.	Tandem 8"+ 9"	Tandem 8"+ 9"	Tandem 8"+ 9"	Tandem 8"+ 9"
	Proportioning Valve Type			—	—	—	—
	Suspension Type	Front		MacPherson Strut	MacPherson Strut	MacPherson Strut	MacPherson Strut
		Rear		Double Wishbone	Double Wishbone	Double Wishbone	Double Wishbone
	Stabilizer Bar	Front		Standard	Standard	Standard	Standard
		Rear		Standard	Standard	Standard	Standard
	Steering Gear Type			Rack and Pinion	Rack and Pinion	Rack and Pinion	Rack and Pinion
	Steering Gear Ratio (Overall)			17.5, 17.3*2	17.5, 17.3*2	16.1, 15.9*2	16.1, 15.9*2
	Power Steering Type			EPS	EPS	Integral Type	Integral Type

*1: With Sun Roof
*2: Rough Road Pack
*3: Option
*4: Snow Mord Type
*5: Counter Gear Ratio Included (Only for Models with Automatic Transaxle)

EUROPE					
5-Door Wagon					
MID TECHNICAL				MID ELEGANT	
AZT250R-AWMEHW	AZT250L-AWMEHW	AZT250R-AWPEHW	AZT250L-AWPEHW	AZT250R-AWMGHW	AZT250L-AWMGHW
4700 (185.0)	4700 (185.0)	4700 (185.0)	4700 (185.0)	4700 (185.0)	4700 (185.0)
1760 (69.3)	1760 (69.3)	1760 (69.3)	1760 (69.3)	1760 (69.3)	1760 (69.3)
1525 (60.0)	1525 (60.0)	1525 (60.0)	1525 (60.0)	1525 (60.0)	1525 (60.0)
2700 (106.3)	2700 (106.3)	2700 (106.3)	2700 (106.3)	2700 (106.3)	2700 (106.3)
1506 (59.3)	1506 (59.3)	1506 (59.3)	1506 (59.3)	1506 (59.3)	1506 (59.3)
1510 (59.4)	1510 (59.4)	1510 (59.4)	1510 (59.4)	1510 (59.4)	1510 (59.4)
2090 (82.3)	2090 (82.3)	2090 (82.3)	2090 (82.3)	2090 (82.3)	2090 (82.3)
1485 (58.5)	1485 (58.5)	1485 (58.5)	1485 (58.5)	1485 (58.5)	1485 (58.5)
1210 (47.6), 1160 (45.7)*1	1210 (47.6), 1160 (45.7)*1	1210 (47.6), 1160 (45.7)*1	1210 (47.6), 1160 (45.7)*1	1210 (47.6), 1160 (45.7)*1	1210 (47.6), 1160 (45.7)*1
910 (35.8)	910 (35.8)	910 (35.8)	910 (35.8)	910 (35.8)	910 (35.8)
1095 (43.1)	1095 (43.1)	1095 (43.1)	1095 (43.1)	1095 (43.1)	1095 (43.1)
135 (5.3), 155 (6.1)*2	135 (5.3), 155 (6.1)*2	135 (5.3), 155 (6.1)*2	135 (5.3), 155 (6.1)*2	135 (5.3), 155 (6.1)*2	135 (5.3), 155 (6.1)*2
13.1°, 14.5°*2	13.1°, 14.5°*2	13.1°, 14.5°*2	13.1°, 14.5°*2	13.1°, 14.5°*2	13.1°, 14.5°*2
18°, 19.2°*2	18°, 19.2°*2	18°, 19.2°*2	18°, 19.2°*2	18°, 19.2°*2	18°, 19.2°*2
770 - 800 (1698 - 1764)	770 - 800 (1698 - 1764)	800 - 825 (1764 - 1819)	800 - 825 (1764 - 1819)	770 - 800 (1698 - 1764)	770 - 800 (1698 - 1764)
585 - 600 (1290 - 1323)	585 - 600 (1290 - 1323)	585 - 595 (1290 - 1312)	585 - 595 (1290 - 1312)	585 - 600 (1290 - 1323)	585 - 600 (1290 - 1323)
1355 - 1400 (2988 - 3087)	1355 - 1400 (2988 - 3087)	1385 - 1420 (3054 - 3131)	1385 - 1420 (3054 - 3131)	1355 - 1400 (2988 - 3087)	1355 - 1400 (2988 - 3087)
915 (2017)	915 (2017)	915 (2017)	915 (2017)	915 (2017)	915 (2017)
980 (2161)	980 (2161)	980 (2161)	980 (2161)	980 (2161)	980 (2161)
1895 (4178)	1895 (4178)	1895 (4178)	1895 (4178)	1895 (4178)	1895 (4178)
60 (13.2)	60 (13.2)	60 (13.2)	60 (13.2)	60 (13.2)	60 (13.2)
0.520 (18.4)	0.520 (18.4)	0.520 (18.4)	0.520 (18.4)	0.520 (18.4)	0.520 (18.4)
210 (131)	210 (131)	205 (127)	205 (127)	210 (131)	210 (131)
—	—	—	—	—	—
9.6	9.6	11.3	11.3	9.6	9.6
16.7	16.7	17.7	17.7	16.7	16.7
56 (34)	56 (34)	63 (39)	63 (39)	56 (34)	56 (34)
96 (59)	96 (59)	114 (71)	114 (71)	96 (59)	96 (59)
149 (92)	149 (92)	177 (110)	177 (110)	149 (92)	149 (92)
193 (119)	193 (119)	—	—	193 (119)	193 (119)
5.6 (18.4)	5.6 (18.4)	5.6 (18.4)	5.6 (18.4)	5.6 (18.4)	5.6 (18.4)
5.995 (19.7)	5.995 (19.7)	5.995 (19.7)	5.995 (19.7)	5.995 (19.7)	5.995 (19.7)
1AZ-FSE	1AZ-FSE	1AZ-FSE	1AZ-FSE	1AZ-FSE	1AZ-FSE
16-Valve, DOHC	16-Valve, DOHC	16-Valve, DOHC	16-Valve, DOHC	16-Valve, DOHC	16-Valve, DOHC
86.0 × 86.0 (3.39 × 3.39)	86.0 × 86.0 (3.39 × 3.39)	86.0 × 86.0 (3.39 × 3.39)	86.0 × 86.0 (3.39 × 3.39)	86.0 × 86.0 (3.39 × 3.39)	86.0 × 86.0 (3.39 × 3.39)
1998 (121.9)	1998 (121.9)	1998 (121.9)	1998 (121.9)	1998 (121.9)	1998 (121.9)
11.0	11.0	11.0	11.0	11.0	11.0
EFI	EFI	EFI	EFI	EFI	EFI
95 or higher	95 or higher	95 or higher	95 or higher	95 or higher	95 or higher
108/5700	108/5700	108/5700	108/5700	108/5700	108/5700
196/4000	196/4000	196/4000	196/4000	196/4000	196/4000
12 -32, 48*3	12 -32, 48*3	12 - 48	12 - 48	12 -32, 48*3	12 -32, 48*3
1200	1200	1200	1200	1200	1200
1.3, 1.6*3	1.3, 1.6*3	1.6	1.6	1.3, 1.6*3	1.3, 1.6*3
Dry, Single Plate	Dry, Single Plate	—	—	Dry, Single Plate	Dry, Single Plate
E354	E354	U241E*4	U241E*4	E354	E354
3.538	3.538	3.943	3.943	3.538	3.538
2.054	2.054	2.197	2.197	2.054	2.054
1.333	1.333	1.413	1.413	1.333	1.333
1.028	1.028	1.020	1.020	1.028	1.028
0.820	0.820	—	—	0.820	0.820
3.583	3.583	3.145	3.145	3.583	3.583
3.684	3.684	2.923	2.923	3.684	3.684
Ventilated Disc	Ventilated Disc	Ventilated Disc	Ventilated Disc	Ventilated Disc	Ventilated Disc
Solid Disc	Solid Disc	Solid Disc	Solid Disc	Solid Disc	Solid Disc
Drum	Drum	Drum	Drum	Drum	Drum
Tandem 8"+ 9"	Tandem 8"+ 9"	Tandem 8"+ 9"	Tandem 8"+ 9"	Tandem 8"+ 9"	Tandem 8"+ 9"
—	—	—	—	—	—
MacPherson Strut	MacPherson Strut	MacPherson Strut	MacPherson Strut	MacPherson Strut	MacPherson Strut
Double Wishbone	Double Wishbone	Double Wishbone	Double Wishbone	Double Wishbone	Double Wishbone
Standard	Standard	Standard	Standard	Standard	Standard
Standard	Standard	Standard	Standard	Standard	Standard
Rack and Pinion	Rack and Pinion	Rack and Pinion	Rack and Pinion	Rack and Pinion	Rack and Pinion
16.1, 15.9*2	16.1, 15.9*2	16.1, 15.9*2	16.1, 15.9*2	16.1, 15.9*2	16.1, 15.9*2
Integral Type	Integral Type	Integral Type	Integral Type	Integral Type	Integral Type

AP

Item \ Area				EUROPE			
Body Type				5-Door Wagon			
Vehicle Grade				MID ELEGANT		MID TECHNICAL	MID ELEGANT
Model Code				AZT250R-AWPGHW	AZT250L-AWPGHW	AZT251L-AWAEHW	AZT251L-AWAGHW
Major Dimensions & Vehicle Weights	Overall	Length	mm (in.)	4700 (185.0)	4700 (185.0)	4700 (185.0)	4700 (185.0)
		Width	mm (in.)	1760 (69.3)	1760 (69.3)	1760 (69.3)	1760 (69.3)
		Height	mm (in.)	1525 (60.0)	1525 (60.0)	1525 (60.0)	1525 (60.0)
	Wheel Base		mm (in.)	2700 (106.3)	2700 (106.3)	2700 (106.3)	2700 (106.3)
	Tread	Front	mm (in.)	1506 (59.3)	1506 (59.3)	1506 (59.3)	1506 (59.3)
		Rear	mm (in.)	1510 (59.4)	1510 (59.4)	1510 (59.4)	1510 (59.4)
	Room	Length	mm (in.)	2090 (82.3)	2090 (82.3)	2090 (82.3)	2090 (82.3)
		Width	mm (in.)	1485 (58.5)	1485 (58.5)	1485 (58.5)	1485 (58.5)
		Height	mm (in.)	1210 (47.6), 1160 (45.7)*1	1210 (47.6), 1160 (45.7)*1	1210 (47.6), 1160 (45.7)*1	1210 (47.6), 1160 (45.7)*1
	Overhang	Front	mm (in.)	910 (35.8)	910 (35.8)	910 (35.8)	910 (35.8)
		Rear	mm (in.)	1095 (43.1)	1095 (43.1)	1095 (43.1)	1095 (43.1)
	Min. Running Ground Clearance		mm (in.)	135 (5.3), 155 (6.1)*2	135 (5.3), 155 (6.1)*2	135 (5.3), 155 (6.1)*2	135 (5.3), 155 (6.1)*2
	Angle of Approach		degrees	13.1°, 14.5°*2	13.1°, 14.5°*2	13.1°, 14.5°*2	13.1°, 14.5°*2
	Angle of Departure		degrees	18°, 19.2°*2	18°, 19.2°*2	18°, 19.2°*2	18°, 19.2°*2
	Curb Weight	Front	kg (lb)	800 - 825 (1764 - 1819)	800 - 825 (1764 - 1819)	820 - 850 (1806 - 1872)	820 - 850 (1806 - 1872)
		Rear	kg (lb)	585 - 595 (1290 - 1312)	585 - 595 (1290 - 1312)	580 - 595 (1278 - 1311)	580 - 595 (1278 - 1311)
		Total	kg (lb)	1385 - 1420 (3054 - 3131)	1385 - 1420 (3054 - 3131)	1400 - 1445 (3084 - 3183)	1400 - 1445 (3084 - 3183)
	Gross Vehicle Weight	Front	kg (lb)	915 (2017)	915 (2017)	935 (2059)	935 (2059)
		Rear	kg (lb)	980 (2161)	980 (2161)	970 (2157)	970 (2157)
		Total	kg (lb)	1895 (4178)	1895 (4178)	1905 (4196)	1905 (4196)
	Fuel Tank Capacity		L (Imp.gal.)	60 (13.2)	60 (13.2)	60 (13.2)	60 (13.2)
	Luggage Compartment Capacity		m^3 (cu.ft.)	0.520 (18.4)	0.520 (18.4)	0.520 (18.4)	0.520 (18.4)
Performance	Max. Speed		km/h (mph)	205 (127)	205 (127)	220 (138)	220 (138)
	Max. Cruising Speed		km/h (mph)	—	—	—	—
	Acceleration	0 to 100 km/h	sec.	11.3	11.3	9.5	9.5
		0 to 400 m	sec.	17.7	17.7	16.8	16.8
	Max. Permissible Speed	1st Gear	km/h (mph)	63 (39)	63 (39)	45 (27)	45 (27)
		2nd Gear	km/h (mph)	114 (71)	114 (71)	84 (52)	84 (52)
		3rd Gear	km/h (mph)	177 (110)	177 (110)	128 (79)	128 (79)
		4th Gear	km/h (mph)	—	—	176 (109)	176 (109)
	Min. Turning Radius	Tire	m (ft.)	5.6 (18.4)	5.6 (18.4)	5.6 (18.4)	5.6 (18.4)
		Body	m (ft.)	5.995 (19.7)	5.995 (19.7)	5.995 (19.7)	5.995 (19.7)
Engine	Engine Type			1AZ-FSE	1AZ-FSE	2AZ-FSE	2AZ-FSE
	Valve Mechanism			16-Valve, DOHC	16-Valve, DOHC	16-Valve, DOHC	16-Valve, DOHC
	Bore × Stroke		mm (in.)	86.0 × 86.0 (3.39 × 3.39)	86.0 × 86.0 (3.39 × 3.39)	88.5 × 96.0 (3.48 × 3.78)	88.5 × 96.0 (3.48 × 3.78)
	Displacement		cm^3 (cu.in.)	1998 (121.9)	1998 (121.9)	2362 (144.2)	2362 (144.2)
	Compression Ratio			11.0	11.0	11.0	11.0
	Fuel System			EFI	EFI	EFI	EFI
	Research Octane No. or Cetane No. (Diesel)			95 or higher	95 or higher	95 or higher	95 or higher
	Max. Output (EEC)		kW/rpm	108/5700	108/5700	120/5800	120/5800
	Max. Torque (EEC)		N·m/rpm	196/4000	196/4000	230/4000	230/4000
Engine Electrical	Battery Capacity (5HR)		Voltage & Amp. hr.	12 - 48	12 - 48	12 - 48	12 - 48
	Alternator Output		Watts	1200	1200	1200	1200
	Starter Output		kW	1.6	1.6	1.6	1.6
Chassis	Clutch Type			—	—	—	—
	Transaxle Type			U241E*4	U241E*4	U151E	U151E
	Transmission Gear Ratio*5	In First		3.943	3.943	4.235	4.235
		In Second		2.197	2.197	2.360	2.360
		In Third		1.413	1.413	1.517	1.517
		In Fourth		1.020	1.020	1.047	1.047
		In Fifth		—	—	0.756	0.756
		In Reverse		3.145	3.145	3.378	3.378
	Differential Gear Ratio (Final)			2.923	2.923	3.478	3.478
	Brake Type	Front		Ventilated Disc	Ventilated Disc	Ventilated Disc	Ventilated Disc
		Rear		Solid Disc	Solid Disc	Solid Disc	Solid Disc
	Parking Brake Type			Drum	Drum	Drum	Drum
	Brake Booster Type and Size		in.	Tandem 8"+ 9"	Tandem 8"+ 9"	Tandem 8"+ 9"	Tandem 8"+ 9"
	Proportioning Valve Type			—	—	—	—
	Suspension Type	Front		MacPherson Strut	MacPherson Strut	MacPherson Strut	MacPherson Strut
		Rear		Double Wishbone	Double Wishbone	Double Wishbone	Double Wishbone
	Stabilizer Bar	Front		Standard	Standard	Standard	Standard
		Rear		Standard	Standard	Standard	Standard
	Steering Gear Type			Rack and Pinion	Rack and Pinion	Rack and Pinion	Rack and Pinion
	Steering Gear Ratio (Overall)			16.1, 15.9*2	16.1, 15.9*2	16.1, 15.9*2	16.1, 15.9*2
	Power Steering Type			Integral Type	Integral Type	Integral Type	Integral Type

*1: With Sun Roof
*2: Rough Road Pack
*3: Option
*4: Snow Mord Type
*5: Counter Gear Ratio Included (Only for Models with Automatic Transaxle)

	EUROPE				GENERAL COUNTRIES	
	5-Door Wagon				4-Door Sedan	
	ENTRY		MID TECHNICAL	MID ELEGANT	ENTRY	
	CDT250R-AWMNYW	CDT250L-AWMNYW	CDT250L-AWMEYW	CDT250L-AWMGYW	AZT250L-AEMNK	AZT250R-AEPNK
5	4700 (185.0)	4700 (185.0)	4700 (185.0)	4700 (185.0)	4630 (182.3)	4630 (182.3)
	1760 (69.3)	1760 (69.3)	1760 (69.3)	1760 (69.3)	1760 (69.3)	1760 (69.3)
	1525 (60.0)	1525 (60.0)	1525 (60.0)	1525 (60.0)	1480 (58.3)	1480 (58.3)
	2700 (106.3)	2700 (106.3)	2700 (106.3)	2700 (106.3)	2700 (106.3)	2700 (106.3)
	1506 (59.3)	1506 (59.3)	1506 (59.3)	1506 (59.3)	1506 (59.3)	1506 (59.3)
10	1510 (59.4)	1510 (59.4)	1510 (59.4)	1510 (59.4)	1510 (59.4)	1510 (59.4)
	2090 (82.3)	2090 (82.3)	2090 (82.3)	2090 (82.3)	2090 (82.3)	2090 (82.3)
	1485 (58.5)	1485 (58.5)	1485 (58.5)	1485 (58.5)	1485 (58.5)	1485 (58.5)
	1210 (47.6), 1160 (45.7)*1	1210 (47.6), 1160 (45.7)*1	1210 (47.6), 1160 (45.7)*1	1210 (47.6), 1160 (45.7)*1	1210 (47.6), 1160 (45.7)*1	1210 (47.6), 1160 (45.7)*1
	910 (35.8)	910 (35.8)	910 (35.8)	910 (35.8)	910 (35.8)	910 (35.8)
15	1095 (43.1)	1095 (43.1)	1095 (43.1)	1095 (43.1)	1025 (40.4)	1025 (40.4)
	135 (5.3), 155 (6.1)*2	135 (5.3)	135 (5.3)	135 (5.3)	135 (5.3), 155 (6.1)*2	135 (5.3), 155 (6.1)*2
	13.1°, 14.5°*2	13.1°	13.1°	13.1°	13.1°, 14.5°*2	13.1°, 14.5°*2
	18°, 19.2°*2	18°	18°	18°	18.7°, 20.1°*2	18.7°, 20.1°*2
	850 - 900 (1874 - 1984)	850 - 900 (1874 - 1984)	860 - 900 (1896 - 1984)	860 - 900 (1896 - 1984)	750 - 780 (1653 - 1720)	780 - 810 (1720 - 1786)
20	580 - 590 (1279 - 1301)	580 - 590 (1279 - 1301)	580 - 595 (1279 - 1312)	580 - 595 (1279 - 1312)	525 - 530 (1157 - 1168)	525 - 530 (1157 - 1168)
	1430 - 1490 (3153 - 3285)	1430 - 1490 (3153 - 3285)	1440 - 1495 (3175 - 3296)	1440 - 1495 (3175 - 3296)	1275 - 1310 (2810 - 2888)	1305 - 1340 (2877 - 2954)
	985 (2172)	985 (2172)	985 (2172)	985 (2172)	890 (1962)	890 (1962)
	985 (2172)	985 (2172)	985 (2172)	985 (2172)	915 (2017)	915 (2017)
	1970 (4344)	1970 (4344)	1970 (4344)	1970 (4344)	1805 (3979)	1805 (3979)
25	60 (13.2)	60 (13.2)	60 (13.2)	60 (13.2)	60 (13.2)	60 (13.2)
	0.520 (18.4)	0.520 (18.4)	0.520 (18.4)	0.520 (18.4)	0.520 (18.4)	0.520 (18.4)
	195 (121)	195 (121)	195 (121)	195 (121)	195 (121)	190 (118)
	—	—	—	—	—	—
	11.4	11.4	11.4	11.4	10.0	11.8
30	17.8	17.8	17.8	17.8	17.1	18.0
	45 (27)	45 (27)	45 (27)	45 (27)	51 (31)	62 (38)
	84 (52)	84 (52)	84 (52)	84 (52)	88 (54)	111 (68)
	128 (79)	128 (79)	128 (79)	128 (79)	136 (84)	174 (108)
	176 (109)	176 (109)	176 (109)	176 (109)	177 (109)	—
35	5.6 (18.4)	5.6 (18.4)	5.6 (18.4)	5.6 (18.4)	5.6 (18.4)	5.6 (18.4)
	5.995 (19.7)	5.995 (19.7)	5.995 (19.7)	5.995 (19.7)	5.995 (19.7)	5.995 (19.7)
	1CD-FTV	1CD-FTV	1CD-FTV	1CD-FTV	1AZ-FE	1AZ-FE
	16-Valve, DOHC	16-Valve, DOHC	16-Valve, DOHC	16-Valve, DOHC	16-Valve, DOHC	16-Valve, DOHC
	82.2 × 94.0 (3.24 × 3.70)	82.2 × 94.0 (3.24 × 3.70)	82.2 × 94.0 (3.24 × 3.70)	82.2 × 94.0 (3.24 × 3.70)	86.0 × 86.0 (3.39 × 3.39)	86.0 × 86.0 (3.39 × 3.39)
40	1995 (121.7)	1995 (121.7)	1995 (121.7)	1995 (121.7)	1998 (121.9)	1998 (121.9)
	17.8	17.8	17.8	17.8	9.5	9.5
	Common-Rail Type	Common-Rail Type	Common-Rail Type	Common-Rail Type	EFI	EFI
	48 or higher	48 or higher	48 or higher	48 or higher	95 or higher	95 or higher
	85/3600	85/3600	85/3600	85/3600	100/5600	100/5600
45	280/2000-2200	280/2000-2200	280/2000-2200	280/2000-2200	190/4000	190/4000
	12 - 60	12 - 60	12 - 60	12 - 60	12 -32, 48*3	12 -32, 48*3
	1200	1200	1200	1200	1200	1200
	2.0	2.0	2.0	2.0	1.3	1.3
	Dry, Single Plate	Dry, Single Plate	Dry, Single Plate	Dry, Single Plate	Dry, Single Plate	—
50	E357	E357	E357	E357	E354	U241E
	3.538	3.538	3.538	3.538	3.538	3.943
	1.913	1.913	1.913	1.913	2.045	2.197
	1.258	1.258	1.258	1.258	1.333	1.413
	0.918	0.918	0.918	0.918	1.028	1.020
55	0.690	0.690	0.690	0.690	0.820	—
	3.583	3.583	3.583	3.583	3.583	3.145
	3.684	3.684	3.684	3.684	3.944	2.923
	Ventilated Disc	Ventilated Disc	Ventilated Disc	Ventilated Disc	Ventilated Disc	Ventilated Disc
	Solid Disc	Solid Disc	Solid Disc	Solid Disc	Solid Disc	Solid Disc
60	Drum	Drum	Drum	Drum	Drum	Drum
	Tandem 8"+ 9"	Tandem 8"+ 9"	Tandem 8"+ 9"	Tandem 8"+ 9"	Tandem 8"+ 9"	Tandem 8"+ 9"
	—	—	—	—	—	—
	MacPherson Strut	MacPherson Strut	MacPherson Strut	MacPherson Strut	MacPherson Strut	MacPherson Strut
	Double Wishbone	Double Wishbone	Double Wishbone	Double Wishbone	Double Wishbone	Double Wishbone
65	Standard	Standard	Standard	Standard	Standard	Standard
	Standard	Standard	Standard	Standard	Standard	Standard
	Rack and Pinion	Rack and Pinion	Rack and Pinion	Rack and Pinion	Rack and Pinion	Rack and Pinion
	16.1, 15.9*2	16.1	16.1	16.1	16.1, 15.9*2	16.1, 15.9*2
	Integral Type	Integral Type	Integral Type	Integral Type	Integral Type	Integral Type

AP

Item \ Area				GENERAL COUNTRIES
Body Type				4-Door Sedan
Vehicle Grade				ENTRY
Model Code				AZT250L-AEPNK
Major Dimensions & Vehicle Weights	Overall	Length	mm (in.)	4630 (182.3)
		Width	mm (in.)	1760 (69.3)
		Height	mm (in.)	1480 (58.3)
	Wheel Base		mm (in.)	2700 (106.3)
	Tread	Front	mm (in.)	1506 (59.3)
		Rear	mm (in.)	1510 (59.4)
	Room	Length	mm (in.)	2090 (82.3)
		Width	mm (in.)	1485 (58.5)
		Height	mm (in.)	1210 (47.6), 1160 (45.7)*1
	Overhang	Front	mm (in.)	910 (35.8)
		Rear	mm (in.)	1025 (40.4)
	Min. Running Ground Clearance		mm (in.)	135 (5.3), 155 (6.1)*2
	Angle of Approach		degrees	13.1°, 14.5°*2
	Angle of Departure		degrees	18.7°, 20.1°*2
	Curb Weight	Front	kg (lb)	780 - 810 (1720 - 1786)
		Rear	kg (lb)	525 - 530 (1157 - 1168)
		Total	kg (lb)	1305 - 1340 (2877 - 2954)
	Gross Vehicle Weight	Front	kg (lb)	890 (1962)
		Rear	kg (lb)	915 (2017)
		Total	kg (lb)	1805 (3979)
	Fuel Tank Capacity		L (Imp.gal.)	60 (13.2)
	Luggage Compartment Capacity		m^3 ($cu.ft.$)	0.520 (18.4)
Performance	Max. Speed		km/h (mph)	190 (118)
	Max. Cruising Speed		km/h (mph)	—
	Acceleration	0 to 100 km/h	sec.	11.8
		0 to 400 m	sec.	18.0
	Max. Permissible Speed	1st Gear	km/h (mph)	62 (38)
		2nd Gear	km/h (mph)	111 (68)
		3rd Gear	km/h (mph)	174 (108)
		4th Gear	km/h (mph)	—
	Min. Turning Radius	Tire	m (ft.)	5.6 (18.4)
		Body	m (ft.)	5.995 (19.7)
Engine	Engine Type			1AZ-FE
	Valve Mechanism			16-Valve, DOHC
	Bore × Stroke		mm (in.)	86.0 × 86.0 (3.39 × 3.39)
	Displacement		cm^3 ($cu.in.$)	1998 (121.9)
	Compression Ratio			9.5
	Fuel System			EFI
	Research Octane No. or Cetane No. (Diesel)			95 or higher
	Max. Output (EEC)		kW/rpm	100/5600
	Max. Torque (EEC)		N·m/rpm	190/4000
Engine Electrical	Battery Capacity (5HR)		Voltage & Amp. hr.	12 -32, 48*3
	Alternator Output		Watts	1200
	Starter Output		kW	1.3
Chassis	Clutch Type			—
	Transaxle Type			U241E
	Transmission Gear Ratio*4	In First		3.943
		In Second		2.197
		In Third		1.413
		In Fourth		1.020
		In Fifth		—
		In Reverse		3.145
	Differential Gear Ratio (Final)			2.923
	Brake Type	Front		Ventilated Disc
		Rear		Solid Disc
	Parking Brake Type			Drum
	Brake Booster Type and Size		in.	Tandem 8"+ 9"
	Proportioning Valve Type			—
	Suspension Type	Front		MacPherson Strut
		Rear		Double Wishbone
	Stabilizer Bar	Front		Standard
		Rear		Standard
	Steering Gear Type			Rack and Pinion
	Steering Gear Ratio (Overall)			16.1, 15.9*2
	Power Steering Type			Integral Type

*1: With Sun Roof
*2: Rough Road Pack
*3: Option
*4: Counter Gear Ratio Included (Only for Models with Automatic Transaxle)

INTRODUCTION

OUTLINE OF NEW FEATURES

1. 1ZZ-FE and 3ZZ-FE Engines

- The ETCS-i (Electronic Throttle Control System-intelligent) has been adopted.
- The BOSCH alternator with a 90A rated output, which was optional equipment on the previous model, is now standard equipment.

2. Brake

- The brake control system (ABS with EBD, Brake Assist, TRC, and VSC) is standard equipment on the 1ZZ-FE engine model and optional equipment on the 3ZZ-FE engine model.
  This system uses the same BOSCH brake actuator and skid control ECU as the 1AZ-FSE, 2AZ-FSE, and 1CD-FTV engine models.
- The basic construction and operation of the brake control system are the same as on the 1AZ-FSE, 2AZ-FSE, and 1CD-FTV engine models. For details of the brake control system, see the AVENSIS New Car Features (Pub. No. NCF240E).

MODEL CODE

ZZT250 L – A E M N K W

1 2 3 4 5 6 7 8

1	BASIC MODEL CODE
	ZZT250 : With 3ZZ-FE Engine ZZT251 : With 1ZZ-FE Engine AZT250 : With 1AZ-FSE Engine : With 1AZ-FE Engine AZT251 : With 2AZ-FSE Engine CDT250 : With 1CD-FTV Engine

2	STEERING WHEEL POSITION
	L : Left-Hand Drive R : Right-Hand Drive

3	MODEL NAME
	A : AVENSIS

4	BODY TYPE
	E : 4-Door Sedan L : 5-Door Liftback W : 5-Door Wagon

5	GEAR SHIFT TYPE
	M : 5-Speed Manual, Floor P : 4-Speed Automatic, Floor A : 5-Speed Automatic, Floor

6	GRADE
	N : ENTRY E : MID TECHNICAL G : MID ELEGANT

7	ENGINE SPECIFICATION
	H : DOHC EFI and Direct Injection K : Compact DOHC and EFI Y : Common-Rail Diesel X : Common-Rail Diesel and TOYOTA D-CAT System

8	DESTINATION
	W : Europe Blank : General countries

MODEL LINE-UP

Europe (with Manual Transaxle)

ENGINE	BODY TYPE	GRADE	5-Speed Manual Transaxle			
			C50	C250	E354	E357
3ZZ-FE	Sedan	ENTRY	ZZT250L(R)-AEMNKW	—	—	—
		MID TECHNICAL	ZZT250L-AEMEKW	—	—	—
		MID ELEGANT	ZZT250L-AEMGKW	—	—	—
	Liftback	ENTRY	ZZT250L(R)-ALMNKW	—	—	—
	Wagon	ENTRY	ZZT250L-AWMNKW	—	—	—
1ZZ-FE	Sedan	ENTRY	—	ZZT251L(R)-AEMNKW	—	—
		MID TECHNICAL	—	ZZT251L(R)-AEMEKW	—	—
		MID ELEGANT	—	ZZT251L(R)-AEMGKW	—	—
	Liftback	ENTRY	—	ZZT251L(R)-ALMNKW	—	—
		MID TECHNICAL	—	ZZT251L(R)-ALMEKW	—	—
		MID ELEGANT	—	ZZT251L(R)-ALMGKW	—	—
	Wagon	ENTRY	—	ZZT251L(R)-AWMNKW	—	—
		MID TECHNICAL	—	ZZT251L(R)-AWMEKW	—	—
		MID ELEGANT	—	ZZT251L(R)-AWMGKW	—	—
1AZ-FE (Unleaded)	Sedan	MID TECHNICAL	—	—	AZT250L-AEMEKW	—
		MID ELEGANT	—	—	AZT250L-AEMGKW	—
1AZ-FSE	Sedan	MID TECHNICAL	—	—	AZT250L(R)-AEMEHW	—
		MID ELEGANT	—	—	AZT250L(R)-AEMGHW	—
	Liftback	MID TECHNICAL	—	—	AZT250L(R)-ALMEHW	—
		MID ELEGANT	—	—	AZT250L(R)-ALMGHW	—
	Wagon	MID TECHNICAL	—	—	AZT250L(R)-AWMEHW	—
		MID ELEGANT	—	—	AZT250L(R)-AWMGHW	—
1CD-FTV	Sedan	ENTRY	—	—	—	CDT250L(R)-AEMNYW
		MID TECHNICAL	—	—	—	CDT250L(R)-AEMEYW
		MID ELEGANT	—	—	—	CDT250L(R)-AEMGYW
	Liftback	ENTRY	—	—	—	CDT250L(R)-ALMNYW
		MID TECHNICAL	—	—	—	CDT250L(R)-ALMEYW
		MID ELEGANT	—	—	—	CDT250L(R)-ALMGYW
	Wagon	ENTRY	—	—	—	CDT250L(R)-AWMNYW
		MID TECHNICAL	—	—	—	CDT250L-AWMEYW
		MID ELEGANT	—	—	—	CDT250L-AWMGYW
1CD-FTV (TOYOTA D-CAT)	Sedan	MID TECHNICAL	—	—	—	CDT250L(R)-AEMEXW
		MID ELEGANT	—	—	—	CDT250L(R)-AEMGXW

General Countries (with Manual Transaxle)

ENGINE	BODY TYPE	GRADE	5-Speed Manual Transaxle			
			C50	C250	E354	E357
1AZ-FE (Leaded)	Sedan	ENTRY	—	—	AZT250L-AEMNK	—

Europe (with Automatic Transaxle)

ENGINE	BODY TYPE	GRADE	4-Speed Automatic Transaxle		5-Speed Automatic Transaxle
			U241E	U341E	U151E
1ZZ-FE	Sedan	ENTRY	—	ZZT251L(R)-AEPNKW	—
		MID TECHNICAL	—	ZZT251L(R)-AEPEKW	—
		MID ELEGANT	—	ZZT251L(R)-AEPGKW	—
	Liftback	ENTRY	—	ZZT251L(R)-ALPNKW	—
		MID TECHNICAL	—	ZZT251L(R)-ALPEKW	—
		MID ELEGANT	—	ZZT251L(R)-ALPGKW	—
	Wagon	ENTRY	—	ZZT251L-AWPNKW	—
		MID TECHNICAL	—	ZZT251L-AWPEKW	—
		MID ELEGANT	—	ZZT251L-AWPGKW	—
1AZ-FE (Unleaded)	Sedan	MID TECHNICAL	AZT250L-AEPEKW	—	—
		MID ELEGANT	AZT250L-AEPGKW	—	—
	Wagon	MID TECHNICAL	AZT250L-AWPEKW	—	—
		MID ELEGANT	AZT250L-AWPGKW	—	—
1AZ-FSE	Sedan	MID TECHNICAL	AZT250L(R)-AEPEHW	—	—
		MID ELEGANT	AZT250L(R)-AEPGHW	—	—
	Liftback	MID TECHNICAL	AZT250L(R)-ALPEHW	—	—
		MID ELEGANT	AZT250L(R)-ALPGHW	—	—
	Wagon	MID TECHNICAL	AZT250L(R)-AWPEHW	—	—
		MID ELEGANT	AZT250L(R)-AWPGHW	—	—
2AZ-FSE	Sedan	MID TECHNICAL	—	—	AZT251L-AEAEHW
		MID ELEGANT	—	—	AZT251L(R)-AEAGHW
	Liftback	MID TECHNICAL	—	—	AZT251L-ALAEHW
		MID ELEGANT	—	—	AZT251L(R)-ALAGHW
	Wagon	MID TECHNICAL	—	—	AZT251L-AWAEHW
		MID ELEGANT	—	—	AZT251L-AWAGHW

General Countries (with Automatic Transaxle)

ENGINE	BODY TYPE	GRADE	4-Speed Automatic Transaxle		5-Speed Automatic Transaxle
			U241E	U341E	U151E
1AZ-FE (Leaded)	Sedan	ENTRY	AZT250L(R)-AEPNK	—	—

1ZZ-FE AND 3ZZ-FE ENGINES

■ DESCRIPTION

- The ETCS-i (Electronic Throttle Control System-intelligent) has been adopted to ensure excellent throttle control in all operating ranges.
- The major differences in the new 1ZZ-FE and 3ZZ-FE engines from the previous 1ZZ-FE and 3ZZ-FE engines are listed below.

Item	Outline
Charging System	BOSCH alternator with 90A rated output is standard equipment
Intake System	• Change of the throttle body (Driven by the throttle control motor) • Discontinuance of ISC valve
Engine Control System	• Change of the throttle position sensor (linear type → no-contact type) • Adoption of the ETCS-i • Adoption of the accelerator pedal position sensor (linear type) • Some changes in DTC output • Addition of fail-safe functions related to ETCS-i
Other	Configuration and structure are the same as previous model

▶ Engine Specifications ◀

Engine			1ZZ-FE	
Model			New	Previous
No. of Cyls. & Arrangement			4-Cylinder, In-line	←
Valve Mechanism			16-Valve DOHC, Chain Drive (with VVT-i)	←
Combustion Chamber			Pentroof Type	←
Manifolds			Cross-Flow	←
Fuel System			EFI	←
Ignition System			DIS	←
Displacement	cm^3 (cu. in.)		1794 (109.5)	←
Bore × Stroke	mm (in.)		79.0 × 91.5 (3.11 × 3.60)	←
Compression Ratio			10.0 : 1	←
Max. Output	[EEC]		95 kW @ 6000 rpm	←
Max. Torque	[EEC]		170 N·m @ 4200 rpm	←
Valve Timing	Intake	Open	2° ~ 42° BTDC	←
		Close	50° ~ 10° ABDC	←
	Exhaust	Open	42° BBDC	←
		Close	2° ATDC	←
Firing Order			1 - 3 - 4 - 2	←
Research Octane Number			95 or more	←
Oil Grade			API SL-EC or ILSAC	←
Emission Regulation			European STEP IV and European Cold Emission	←
Engine Service Mass* (Reference)	Kg (lb)	M/T	120 (264.6)	←
		A/T	112 (246.9)	←

*: Weight shows the figure with the oil and engine coolant fully filled.

▶ Engine Specifications ◀

Engine			3ZZ-FE	
Model			New	Previous
No. of Cyls. & Arrangement			4-Cylinder, In-line	←
Valve Mechanism			16-Valve DOHC, Chain Drive (with VVT-i)	←
Combustion Chamber			Pentroof Type	←
Manifolds			Cross-Flow	←
Fuel System			EFI	←
Ignition System			DIS	←
Displacement	cm^3 (cu. in.)		1598 (97.5)	←
Bore × Stroke	mm (in.)		79.0 × 81.5 (3.11 × 3.21)	←
Compression Ratio			10.5 : 1	←
Max. Output	[EEC]		81 kW @ 6000 rpm	←
Max. Torque	[EEC]		150 N·m @ 3800 rpm	←
Valve Timing	Intake	Open	2° ~ 42° BTDC	←
		Close	50° ~ 10° ABDC	←
	Exhaust	Open	42° BBDC	←
		Close	2° ATDC	←
Firing Order			1 - 3 - 4 - 2	←
Research Octane Number			95 or more	
Oil Grade			API SL-EC or ILSAC	←
Emission Regulation			European STEP IV and European Cold Emission	←
Engine Service Mass* (Reference)	kg (lb)		118 (260.1)	←

*: Weight shows the figure with the oil and engine coolant fully filled.

■INTAKE SYSTEM

Throttle Body

A linkless type ETCS-i (Electronic Throttle Control System-intelligent) has been adopted. Accordingly, the following changes have been made from the previous model:

- The throttle control motor has been adopted.
- The no-contact type throttle position sensor has been adopted.
- ISC valve has been discontinued.

For details of ETCS-i control, see page 19.

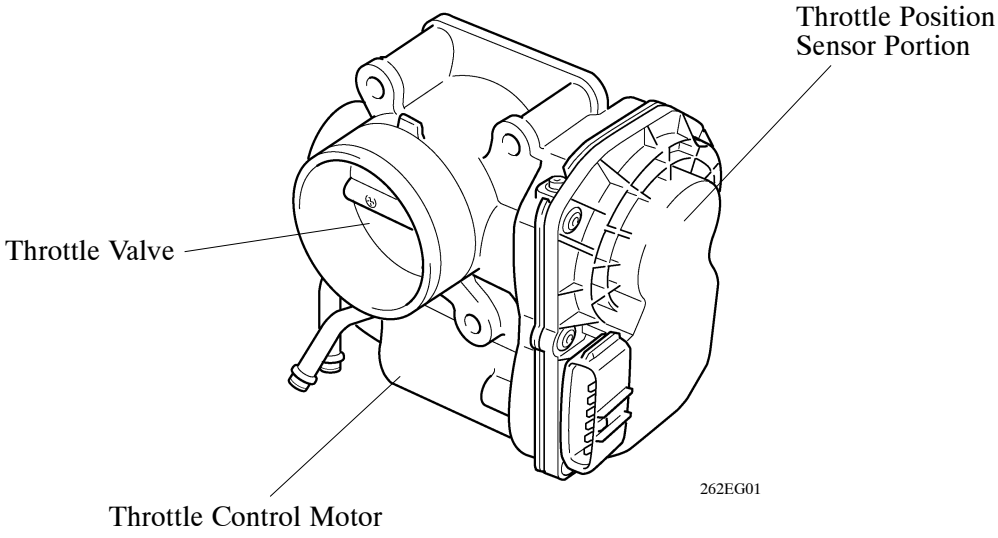

■ENGINE CONTROL SYSTEM

1. General

The engine control system of the 1ZZ-FE and 3ZZ-FE engine has following system.

System	Outline	New	Previous
EFI (Electronic Fuel Injection)	• An L-type EFI system detects the intake air volume with a hot-wire type air flow meter. • The fuel injection system is a sequential multiport fuel injection system.	○	○
ESA (Electronic Spark Advance)	Ignition timing is determined by the Engine ECU based on signals from various sensors. The Engine ECU corrects ignition timing in response to engine knocking.	○	○
ISC (Idle Speed Control)	A rotary solenoid type ISC valve controls the fast idle and idle speeds.	—	○
ETCS-i (Electronic Throttle Control System-intelligent) [See Page 19]	Optimally controls the throttle valve opening in accordance with the amount of accelerator pedal effort and the condition of the engine and the vehicle. In addition, comprehensively controls the ISC, VSC and TRC.	○	—
VVT-i (Variable Valve Timing-intelligent)	Controls the intake camshaft to an optimal valve timing in accordance with the engine condition.	○	○
Fuel Pump Control	• Fuel pump operation is controlled by signals from the Engine ECU. • The fuel pump is stopped when the SRS airbag is deployed in a front or side collision.	○	○
Oxygen Sensor Heater Control	Maintains the temperature of the oxygen sensors at an appropriate level to increase accuracy of detection of the oxygen concentration in the exhaust gas.	○	○
Evaporative Emission Control	The Engine ECU controls the purge flow of evaporative emissions (HC) in the charcoal canister in accordance with engine conditions.	○	○
Air Conditioner Cut-off Control*	By turning the air conditioner compressor ON or OFF in accordance with the engine condition, drivability is maintained.	○	○
Cooling Fan Control	Cooling fan operation is controlled by signals from the Engine ECU based on the water temperature sensor signal and the condition of the air conditioner operation.	○	○
Engine Immobilizer	Prohibits fuel delivery and ignition if an attempt is made to start the engine with an invalid ignition key.	○	○
Diagnosis	When the Engine ECU detects a malfunction, the Engine ECU diagnoses and memorizes the failed section.	○	○
	Along with the adoption of the ETCS-i, some DTCs (Diagnostic Trouble Codes) have been added and discontinued. For details, see page 23.	○	—
Fail-Safe	When the Engine ECU detects a malfunction, the Engine ECU stops or controls the engine according to the data already stored in memory.	○	○
	Along with the adoption of the ETCS-i, fail-safe functions related to the ETCS-i have been added. For details, see page 22.	○	—

*: with Air Conditioner Model

NF

2. Construction

The configuration of the engine control system is as shown in the following chart.

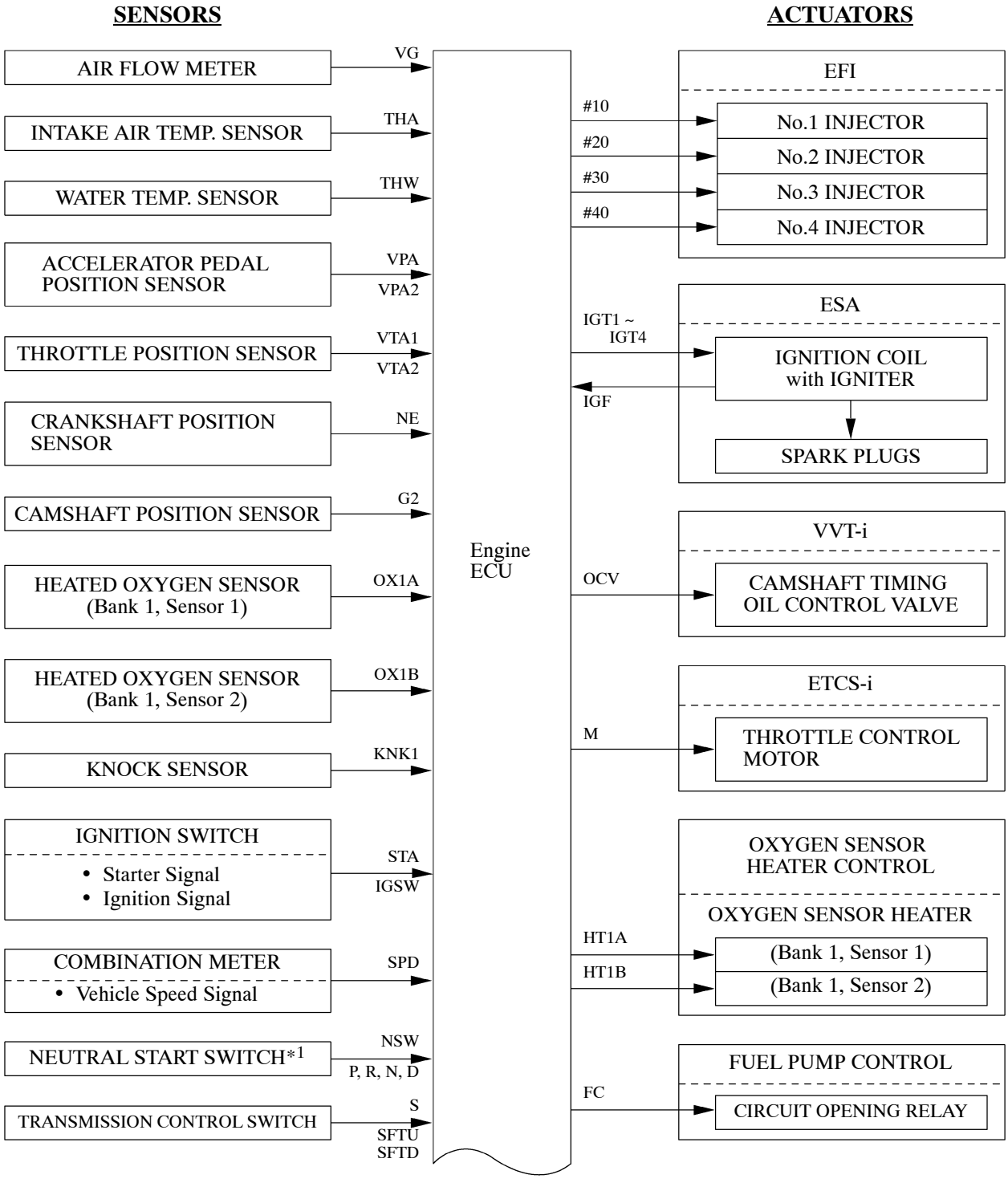

(Continued)

262EG02

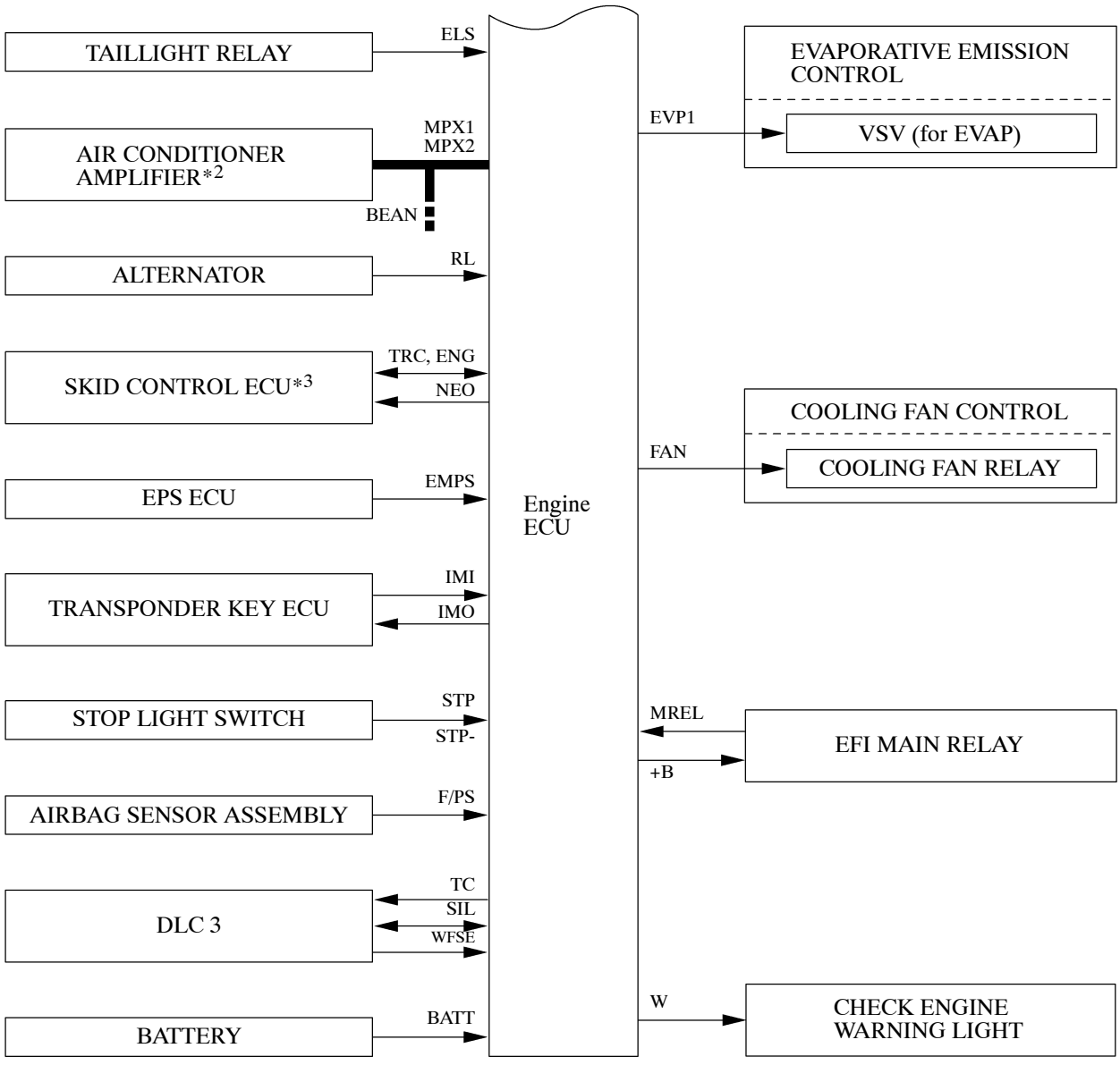

262EG03

*1: Models with Automatic Transaxle
*2: Models with Air Conditioner
*3: Models with Brake Control System (ABS with Brake Assist, TRC and VSC)

NF

▶ MPX Communication ◀

Protocol	Connected to	Reception Signals
BEAN	Air Conditioner Amplifier (ECU)	• A/C Operation • A/C Pressure Sensor Output • Continuously Variable Capacity Compressor Operation • Blower Motor Electrical Load

3. Engine Control System Diagram

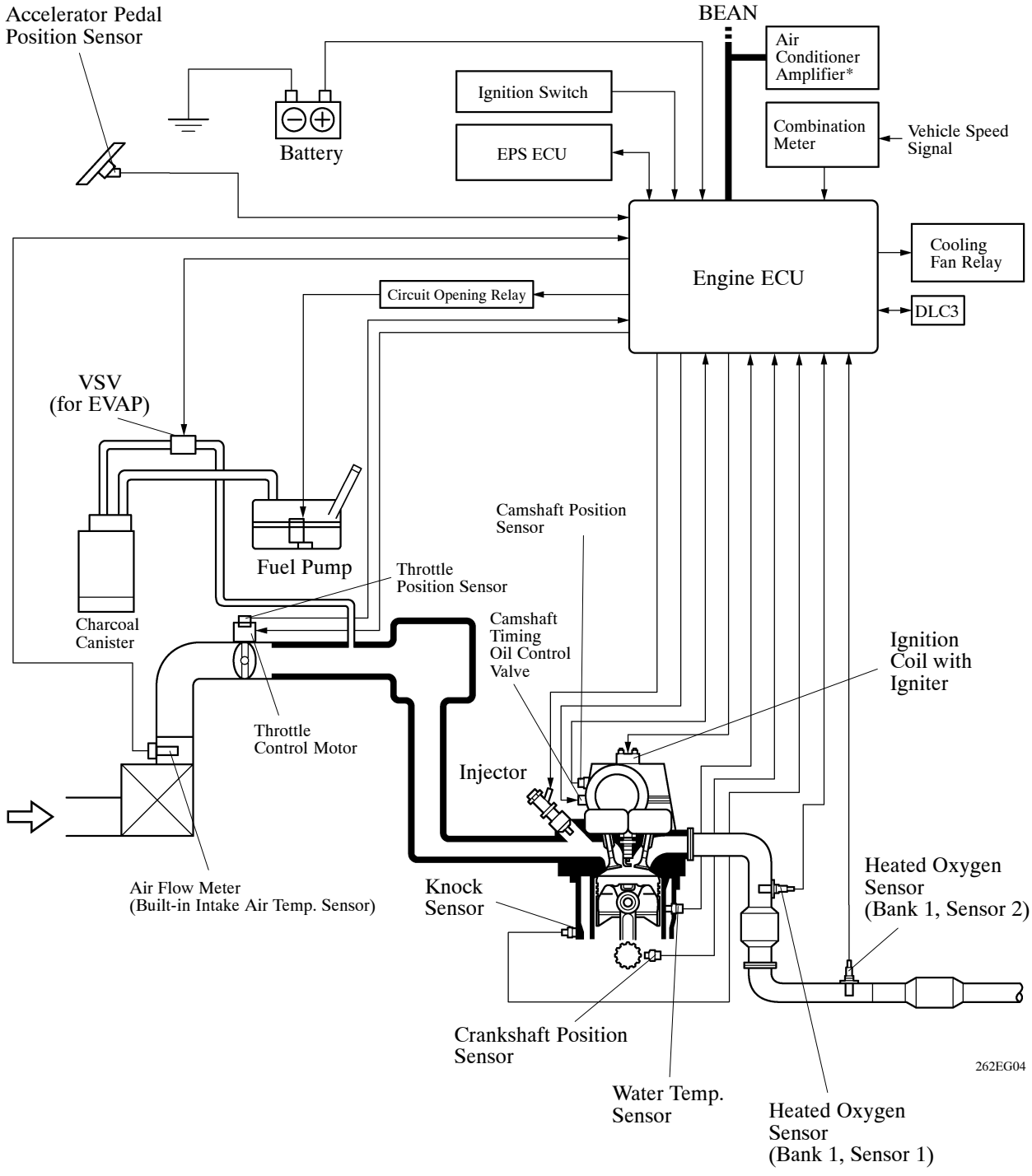

*: Models with Air Conditioner

4. Layout of Main Components

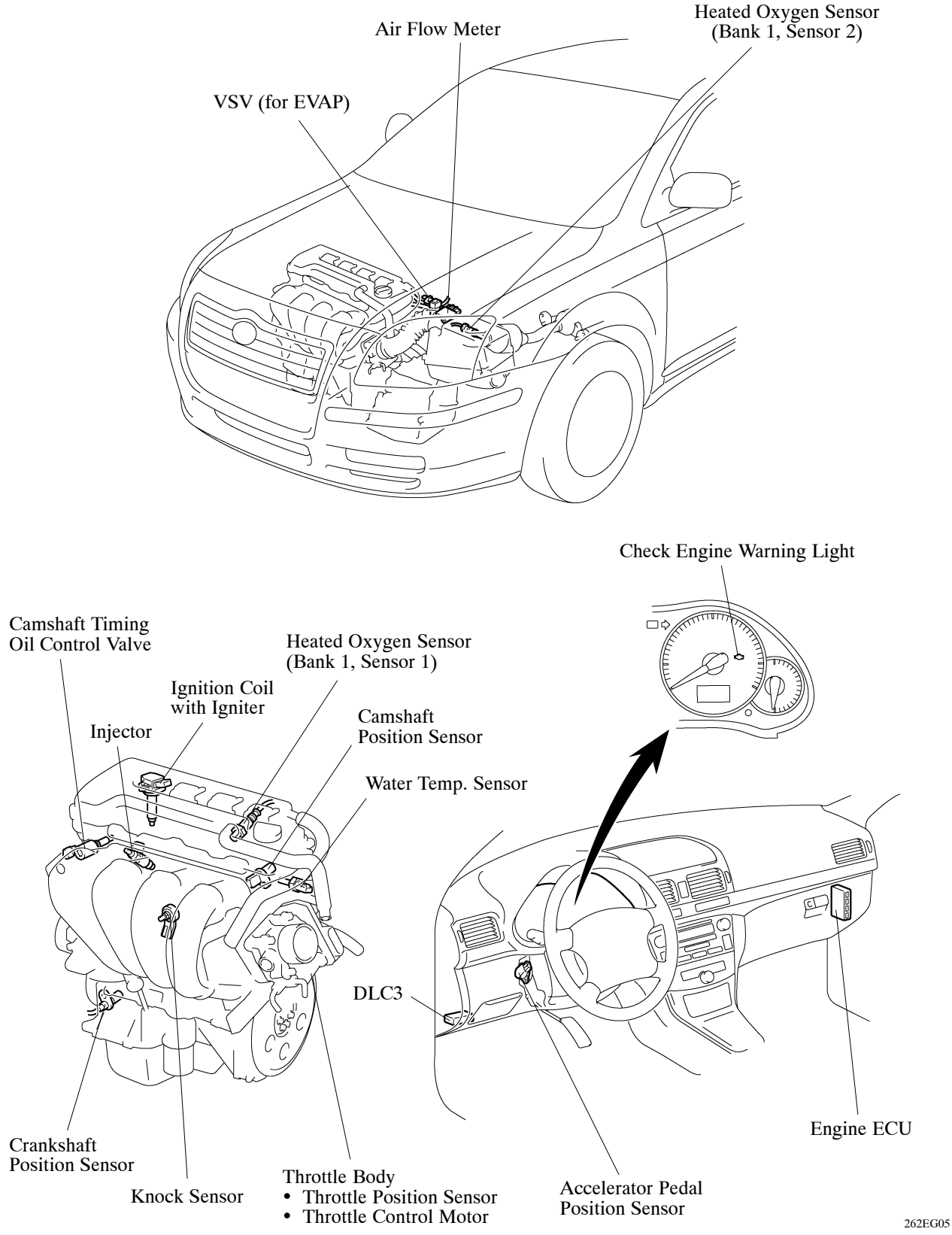

5. Main Components of Engine Control System

General

The main components for the 1ZZ-FE and 3ZZ-FE engine control systems on the new Avensis and the 1ZZ-FE and 3ZZ-FE engine control systems on the previous Avensis are compared below.

Item	New	Previous
Engine ECU	32-bit	←
Air Flow Meter	Hot-wire Type	←
Crankshaft Position Sensor (Rotor Teeth)	Pick-up Coil Type (36 - 2)	←
Camshaft Position Sensor (Rotor Teeth)	Pick-up Coil Type (3)	←
Throttle Position Sensor	No-contact Type	Linear Type
Accelerator Pedal Position Sensor	Linear Type	—
Knock Sensor	Non-resonant, Flat Type	←
Oxygen Sensor (Bank 1, Sensor 1 and 2)	with Heater	←
Injector	12-Hole Type (for 1ZZ-FE) 4-Hole Type (for 3ZZ-FE)	←
ISC Valve	—	Rotary Solenoid Type (1-coil Type)

Throttle Position Sensor

The throttle position sensor is mounted on the throttle body, to detect the opening angle of the throttle valve, the throttle position sensor converts the magnetic flux density that changes when the magnetic yoke (located on the same axis as the throttle shaft) rotates around the Hall IC into electric signals to operate the throttle control motor.

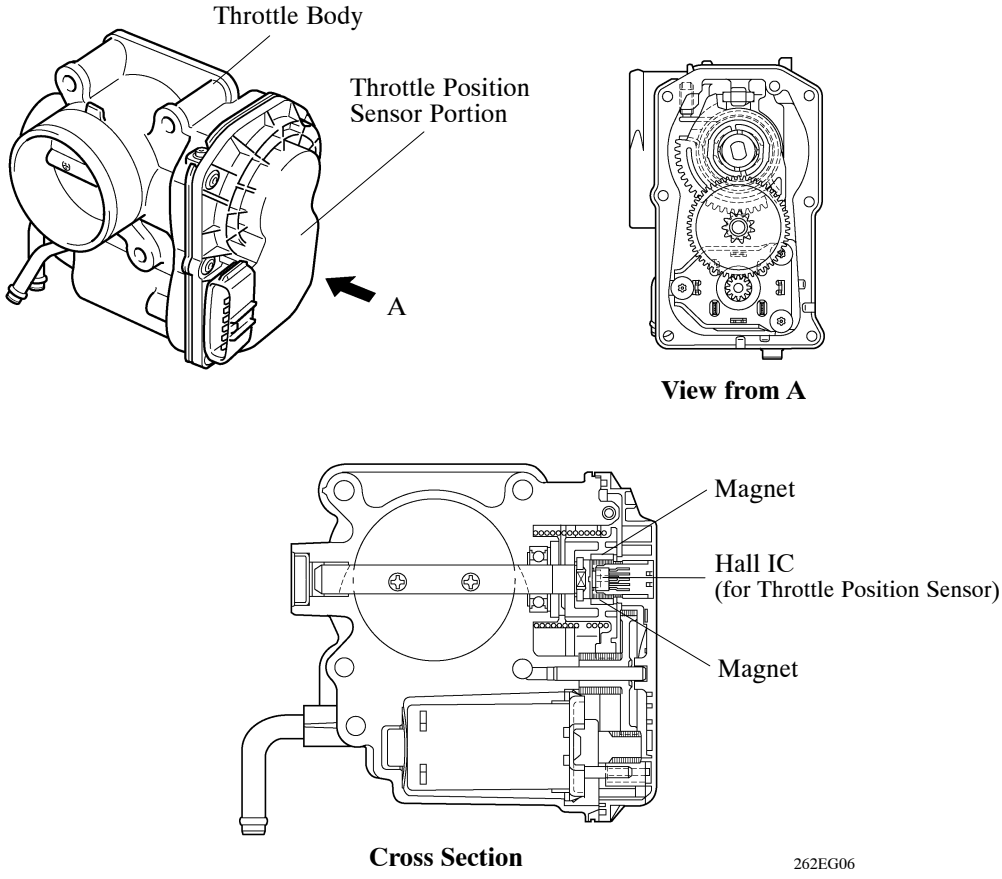

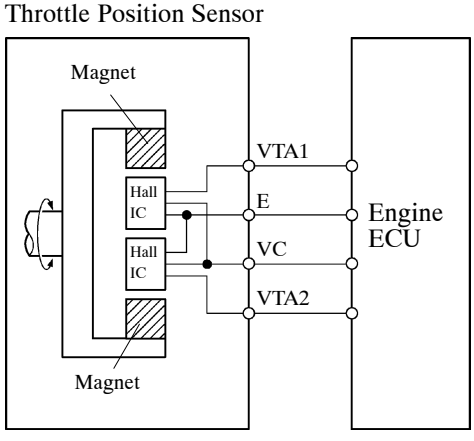

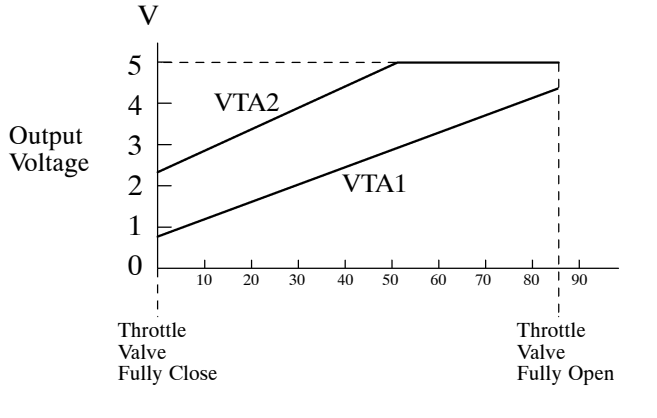

Service Tip

The inspection method differs from the conventional throttle position sensor because this sensor uses a Hall IC. For details, refer to the Avensis Repair Manual Supplement (Pub. No. RM1098E.)

Accelerator Pedal Position Sensor

- This sensor converts the accelerator pedal angle into electric signals with two differing characteristics and outputs them to the engine ECU. One is the VPA signal that linearly outputs the voltage along the entire range of the accelerator pedal angle. The other is the VPA2 signal that outputs an offset voltage.
- The accelerator pedal position sensor is attached to the accelerator pedal.

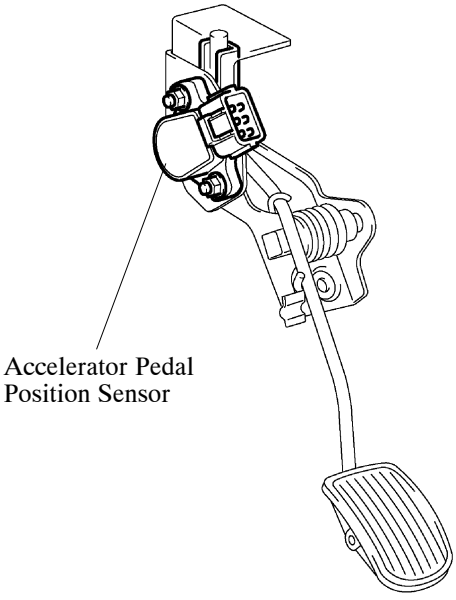

206EG37

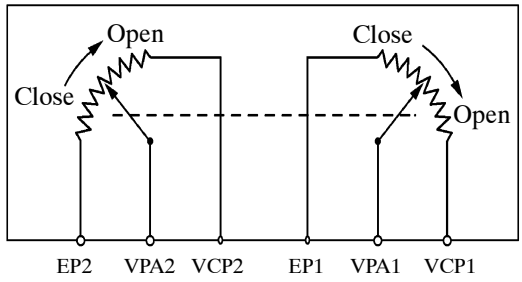

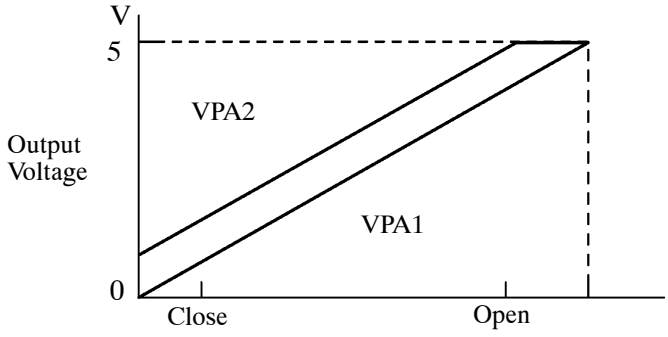

199EG40

6. ETCS-i (Electronic Throttle Control System-intelligent)

General

- The ETCS-i is used, providing excellent throttle control in all the operating ranges.
  The accelerator cable has been discontinued, and an accelerator pedal position sensor has been provided on the accelerator pedal.
- In the conventional throttle body, the throttle valve opening is determined invariably by the amount of the accelerator pedal effort. In contrast, the ETCS-i uses the engine ECU to calculate the optimal throttle valve opening that is appropriate for the respective driving condition and uses a throttle control motor to control the opening.
- The ETCS-i controls the ISC (Idle Speed Control) system, the TRC (Traction Control), and the VSC (Vehicle Stability Control) system.
- In case of an abnormal condition, this system transfers to the limp mode.

▶ System Diagram ◀

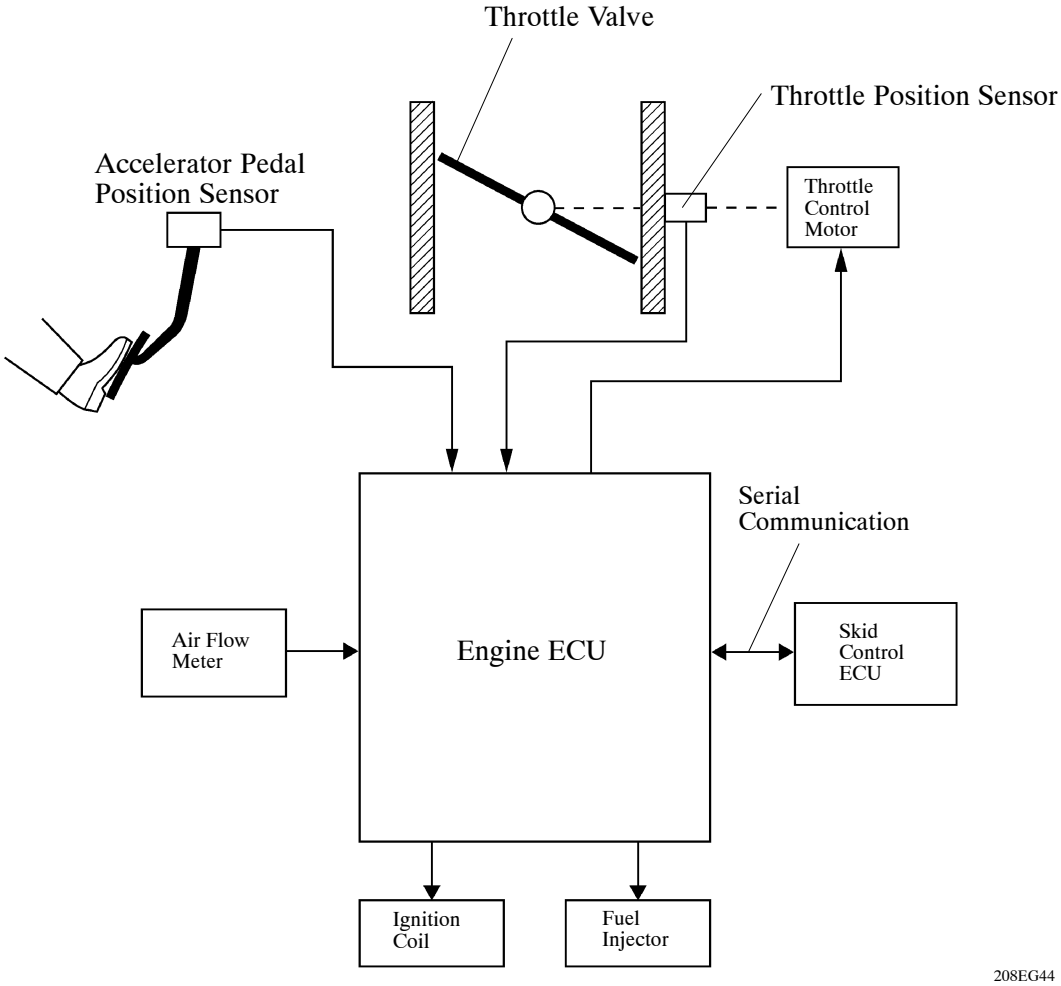

Construction

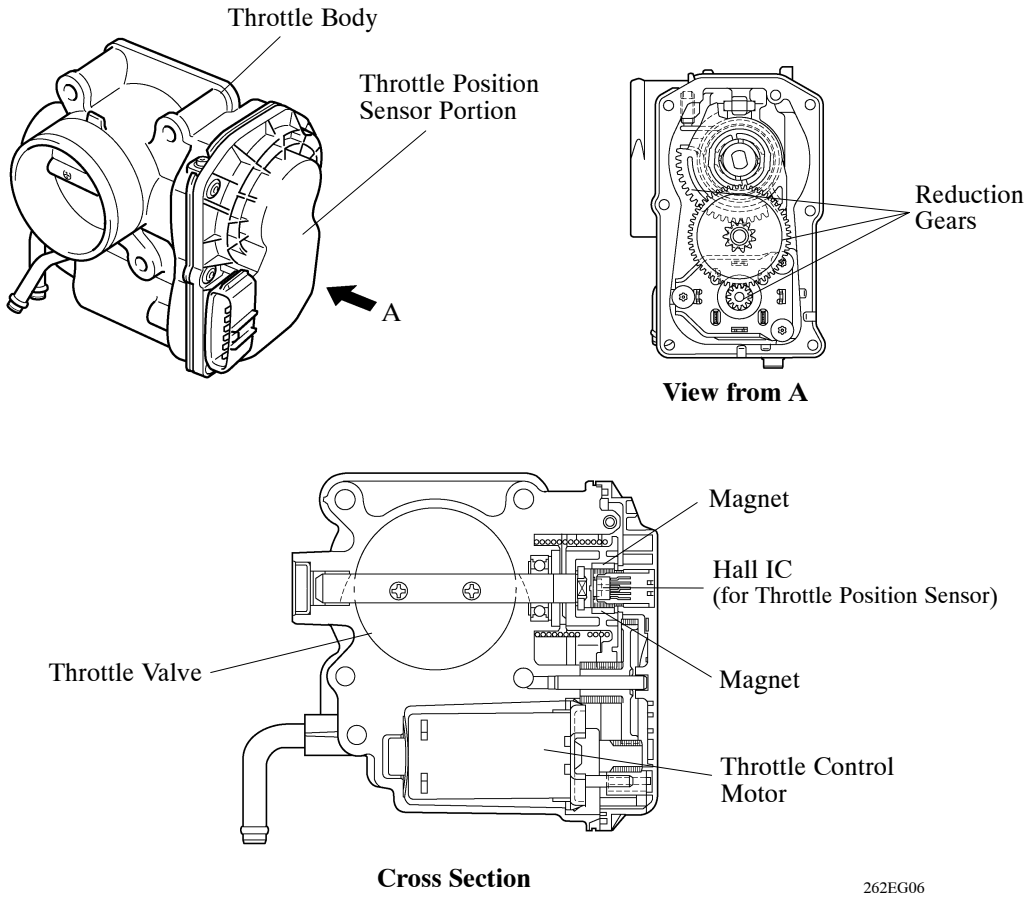

1) Throttle Position Sensor

The throttle position sensor is mounted on the throttle body, to detect the opening angle of the throttle valve. For details, refer to Main Components of Engine Control System section on page 17.

2) Throttle Control Motor

A DC motor with excellent response and minimal power consumption is used for the throttle control motor. The engine ECU performs the duty ratio control of the direction and the amperage of the current that flows to the throttle control motor in order to regulate the opening of the throttle valve.

Operation

1) General

The engine ECU drives the throttle control motor by determining the target throttle valve opening in accordance with the respective operating condition.

1) Non-Linear Control
2) Idle Speed Control
3) TRC Throttle Control
4) VSC Coordination Control

2) Non-Linear Control

Controls the throttle to an optimal throttle valve opening that is appropriate for the driving condition such as the amount of the accelerator pedal effort and the engine speed in order to realize excellent throttle control and comfort in all operating ranges.

▶ Control Examples During Acceleration and Deceleration ◀

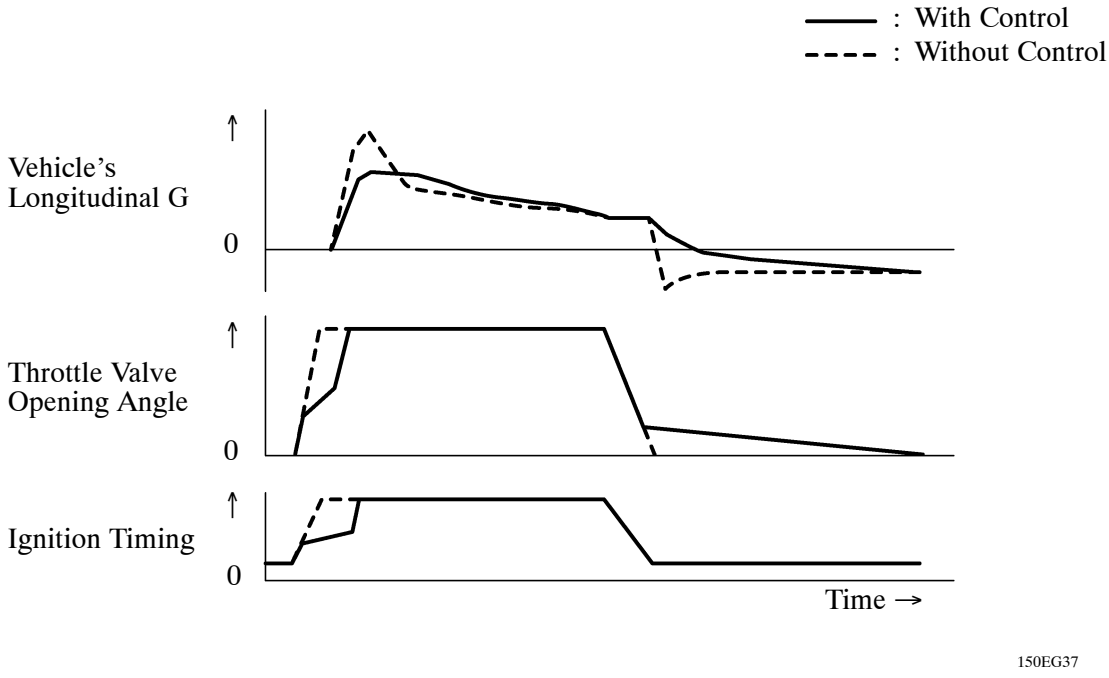

150EG37

3) Idle Speed Control

The engine ECU controls the throttle valve in order to constantly maintain an ideal idle speed.

4) TRC Throttle Control

As part of the TRC system, the throttle valve is closed by a demand signal from the skid control ECU if an excessive amount of slippage is created at a driving wheel, thus facilitating the vehicle in providing excellent stability and driving force.

5) VSC Coordination Control

In order to bring the effectiveness of the VSC system control into full play, the throttle valve opening angle is controlled by effecting a coordination control with the skid control ECU.

Fail-Safe of Accelerator Pedal Position Sensor

- The accelerator pedal position sensor comprises two (main, sub) sensor circuits. If a malfunction occurs in either one of the sensor circuits, the engine ECU detects the abnormal signal voltage difference between these two sensor circuit and switches to the limp mode. In the limp mode, the remaining circuit is used to calculate the accelerator pedal opening, in order to operate the vehicle under limp mode control.

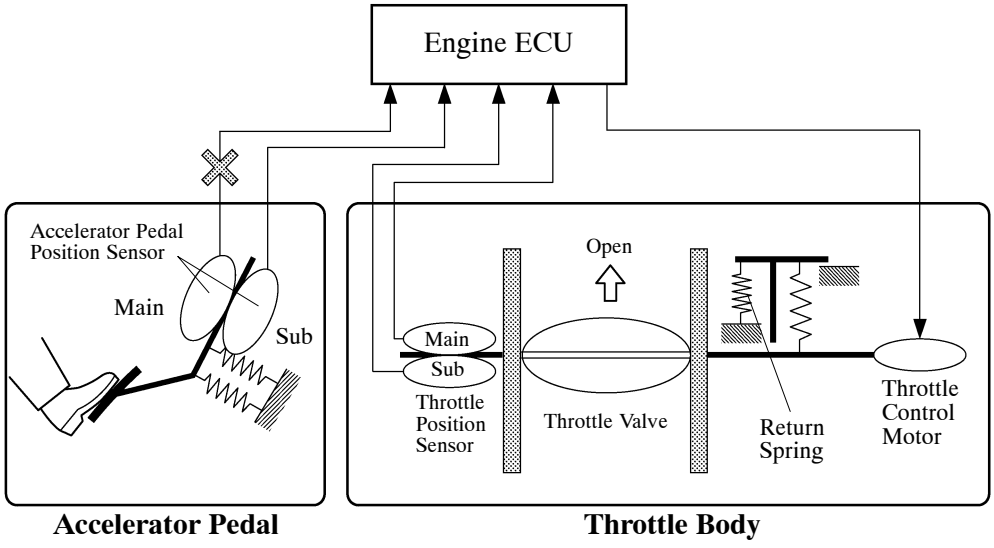

- If both circuits malfunction, the engine ECU detects the abnormal signal voltage from these two sensor circuits and discontinues the throttle control. At this time, the vehicle can be driven within its idling range.

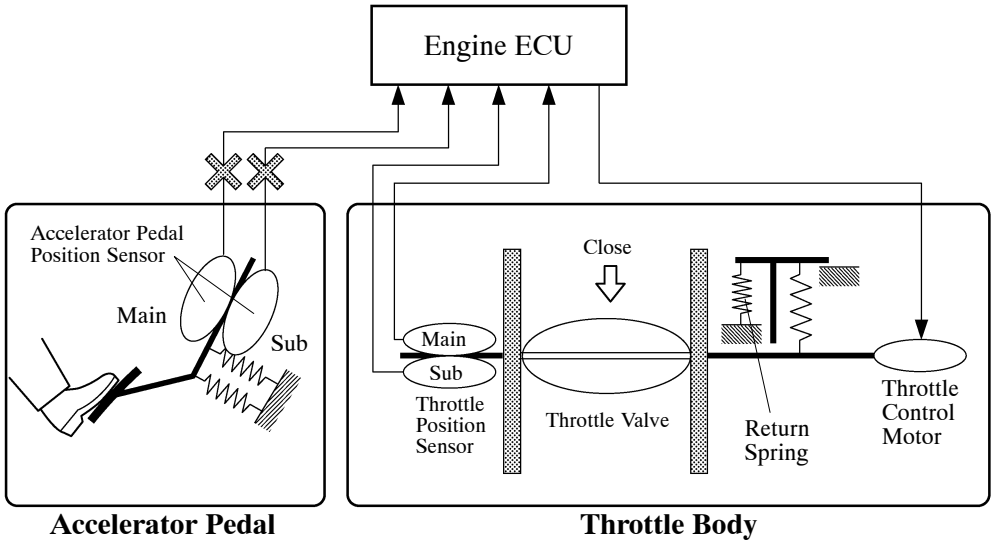

Fail-Safe of Throttle Position Sensor

- The throttle position sensor comprises two (main, sub) sensor circuits. If a malfunction occurs in either one of the sensor circuits, the engine ECU detects the abnormal signal voltage difference between these two sensor circuits, cuts off the current to the throttle control motor, and switches to the limp mode. Then, the force of the return spring causes the throttle valve to return and stay at the prescribed opening. At this time, the vehicle can be driven in the limp mode while the engine output is regulated through the control of the fuel injection and ignition timing in accordance with the accelerator opening.
- The same control as above is effected if the engine ECU detects a malfunction in the throttle control motor system.

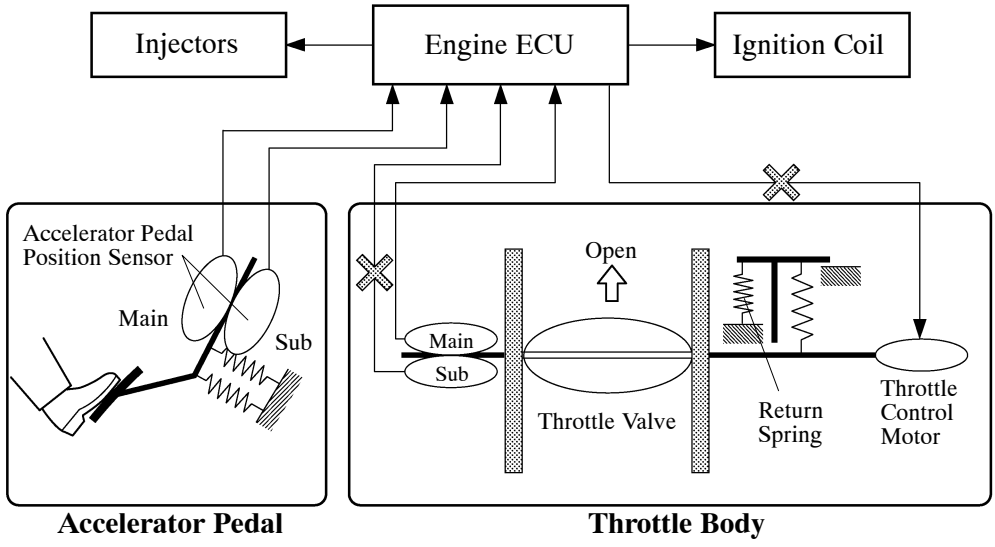

7. Diagnosis

- Along with the adoption of the ETCS-i, some DTCs (Diagnostic Trouble Codes) have been added and discontinued.
- All the DTCs have been made to correspond to the SAE controlled codes. Some of the DTCs have been further divided into smaller detection areas than in the past, and new DTCs have been assigned to them.
- For details, see the Avensis Repair Manual Supplement (Pub. No. RM1098E).


TOYOTA

MAJOR TECHNICAL SPECIFICATIONS

Area			EUROPE			
Body Type			4-Door Sedan			
Model Code			ZZT250R-AEMNKW	ZZT250L-AEMNKW	ZZT250L-AEMEKW	ZZT250L-AEMGKW
Major Dimensions & Vehicle Weights						
Overall	Length	mm (in.)	4630 (182.3)	4630 (182.3)	4630 (182.3)	4630 (182.3)
	Width	mm (in.)	1760 (69.3)	1760 (69.3)	1760 (69.3)	1760 (69.3)
	Height	mm (in.)	1480 (58.3)	1480 (58.3)	1480 (58.3)	1480 (58.3)
Wheel Base		mm (in.)	2700 (106.3)	2700 (106.3)	2700 (106.3)	2700 (106.3)
Tread	Front	mm (in.)	1505 (59.3)*1, 1520 (59.8)*2	1505 (59.3)*1, 1520 (59.8)*2	1505 (59.3)*1, 1520 (59.8)*2	1505 (59.3)*1, 1520 (59.8)*2
	Rear	mm (in.)	1500 (59.1)*1, 1520 (59.8)*2	1500 (59.1)*1, 1520 (59.8)*2	1500 (59.1)*1, 1520 (59.8)*2	1500 (59.1)*1, 1520 (59.8)*2
Room	Length	mm (in.)	2090 (82.3)	2090 (82.3)	2090 (82.3)	2090 (82.3)
	Width	mm (in.)	1485 (58.5)	1485 (58.5)	1485 (58.5)	1485 (58.5)
	Height	mm (in.)	1210 (47.6), 1160 (45.7)*3	1210 (47.6), 1160 (45.7)*3	1210 (47.6), 1160 (45.7)*3	1210 (47.6), 1160 (45.7)*3
Overhang	Front	mm (in.)	910 (35.8)	910 (35.8)	910 (35.8)	910 (35.8)
	Rear	mm (in.)	1025 (40.4)	1025 (40.4)	1025 (40.4)	1025 (40.4)
Min. Running Ground Clearance		mm (in.)	135 (5.3), 155 (6.1)*4	135 (5.3), 155 (6.1)*4	135 (5.3), 155 (6.1)*4	135 (5.3), 155 (6.1)*4
Angle of Approach/Departure		degrees	13.1, 14.5*4/18.7, 20.1*4	13.1, 14.5*4/18.7, 20.1*4	13.1, 14.5*4/18.7, 20.1*4	13.1, 14.5*4/18.7, 20.1*4
Curb Weight	Front	kg (lb)	710 to 750 (1565 to 1653)	710 to 750 (1565 to 1653)	720 to 750 (1587 to 1653)	720 to 750 (1587 to 1653)
	Rear	kg (lb)	535 to 560 (1179 to 1235)	535 to 560 (1179 to 1235)	550 to 570 (1213 to 1257)	550 to 570 (1213 to 1257)
	Total	kg (lb)	1245 to 1310 (2744 to 2888)	1245 to 1310 (2744 to 2888)	1270 to 1320 (2800 to 2910)	1270 to 1320 (2800 to 2910)
Gross Vehicle Weight	Front	kg (lb)	840 (1852)	840 (1852)	840 (1852)	840 (1852)
	Rear	kg (lb)	980 (2161)	980 (2161)	980 (2161)	980 (2161)
	Total	kg (lb)	1820 (4013)	1820 (4013)	1820 (4013)	1820 (4013)
Luggage Compartment Capacity		m^3 (cu.ft.)	0.520 (18.4)	0.520 (18.4)	0.520 (18.4)	0.520 (18.4)
Fuel Tank Capacity		L (Us.gal, Imp.gal)	60 (13.2)	60 (13.2)	60 (13.2)	60 (13.2)
Performance						
Max. Speed		km/h (mph)	195 (121)	195 (121)	195 (121)	195 (121)
Max. Cruising Speed		km/h (mph)	—	—	—	—
Acceleration	0 to 100 km/h	sec.	12.0	12.0	12.0	12.0
	0 to 400 m	sec.	18.1	18.1	18.1	18.1
Max. Permissible Speed	1st Gear	km/h (mph)	47 (29)	47 (29)	47 (29)	47 (29)
	2nd Gear	km/h (mph)	87 (54)	87 (54)	87 (54)	87 (54)
	3rd Gear	km/h (mph)	127 (78)	127 (78)	127 (78)	127 (78)
	4th Gear	km/h (mph)	172 (106)	172 (106)	172 (106)	172 (106)
Min. Turning Radius	Tire	m (ft.)	5.4 (17.7)	5.4 (17.7)	5.4 (17.7)	5.4 (17.7)
	Body	m (ft.)	5.75 (18.9)	5.75 (18.9)	5.75 (18.9)	5.75 (18.9)
Engine						
Engine Type			3ZZ-FE	3ZZ-FE	3ZZ-FE	3ZZ-FE
No. of Cyls. & Arrangement			4-cylinder, In-line	4-cylinder, In-line	4-cylinder, In-line	4-cylinder, In-line
Valve Mechanism			16-valve, DOHC with VVT-i	16-valve, DOHC with VVT-i	16-valve, DOHC with VVT-i	16-valve, DOHC with VVT-i
Bore × Stroke		mm (in.)	79.0×81.5 (3.11×3.21)	79.0×81.5 (3.11×3.21)	79.0×81.5 (3.11×3.21)	79.0×81.5 (3.11×3.21)
Displacement		cm^3 (cu.in.)	1598 (97.5)	1598 (97.5)	1598 (97.5)	1598 (97.5)
Compression Ratio			10.5 : 1	10.5 : 1	10.5 : 1	10.5 : 1
Fuel System			EFI	EFI	EFI	EFI
Reserch Octane No. or Cetane No.			95 or higher	95 or higher	95 or higher	95 or higher
Max. Output (EEC)		kW/rpm	81/6000	81/6000	81/6000	81/6000
Max. Torque (EEC)		Nm/rpm	150/3800	150/3800	150/3800	150/3800
Engine Electrical						
Battery Capacity (5HR)		Voltage & Amp. hr.	12 -32, 48*5	12 -32, 48*5	12 -32, 48*5	12 -32, 48*5
Alternator Output		Watts	1080	1080	1080	1080
Starter Output		kW	1.3	1.3	1.3	1.3
Chassis						
Transaxle Type			C50 (MT)	C50 (MT)	C50 (MT)	C50 (MT)
Gear Ratio (Counter Gear Ratio Included*6)	1st		3.545	3.545	3.545	3.545
	2nd		1.904	1.904	1.904	1.904
	3rd		1.310	1.310	1.310	1.310
	4th		0.969	0.969	0.969	0.969
	5th		0.815	0.815	0.815	0.815
	6th		—	—	—	—
	Reverse		3.250	3.250	3.250	3.250
Differential (Final) Gear Ratio			4.312	4.312	4.312	4.312
Brake Type	Front		Ventilated Disc	Ventilated Disc	Ventilated Disc	Ventilated Disc
	Rear		Solid Disc	Solid Disc	Solid Disc	Solid Disc
Suspension Type	Front		MacPherson Strut	MacPherson Strut	MacPherson Strut	MacPherson Strut
	Rear		Double Wishbone	Double Wishbone	Double Wishbone	Double Wishbone
Stabilizer Bar		Front/Rear	Standard/Standard	Standard/Standard	Standard/Standard	Standard/Standard
Steering Gear Type			Rack and Pinion	Rack and Pinion	Rack and Pinion	Rack and Pinion
Steering Gear Ratio			17.5, 17.3*4	17.5, 17.3*4	17.5, 17.3*4	17.5, 17.3*4
Power Steering Type			EPS	EPS	EPS	EPS

*1: 205/55R 16 tires, 215/45R 17 tires
*2: 195/65R 15 tires
*3: With Sliding Roof
*4: Rough Road Package
*5: Option
*6: Only for AT

EUROPE					
4-Door Sedan					
ZZT251R-AEMNKW	ZZT251L-AEMNKW	ZZT251R-AEMEKW	ZZT251L-AEMEKW	ZZT251R-AEPEKW	ZZT251L-AEPEKW
4630 (182.3)	4630 (182.3)	4630 (182.3)	4630 (182.3)	4630 (182.3)	4630 (182.3)
1760 (69.3)	1760 (69.3)	1760 (69.3)	1760 (69.3)	1760 (69.3)	1760 (69.3)
1480 (58.3)	1480 (58.3)	1480 (58.3)	1480 (58.3)	1480 (58.3)	1480 (58.3)
2700 (106.3)	2700 (106.3)	2700 (106.3)	2700 (106.3)	2700 (106.3)	2700 (106.3)
1505 (59.3)*1, 1520 (59.8)*2	1505 (59.3)*1, 1520 (59.8)*2	1505 (59.3)*1, 1520 (59.8)*2	1505 (59.3)*1, 1520 (59.8)*2	1505 (59.3)*1, 1520 (59.8)*2	1505 (59.3)*1, 1520 (59.8)*2
1500 (59.1)*1, 1520 (59.8)*2	1500 (59.1)*1, 1520 (59.8)*2	1500 (59.1)*1, 1520 (59.8)*2	1500 (59.1)*1, 1520 (59.8)*2	1500 (59.1)*1, 1520 (59.8)*2	1500 (59.1)*1, 1520 (59.8)*2
2090 (82.3)	2090 (82.3)	2090 (82.3)	2090 (82.3)	2090 (82.3)	2090 (82.3)
1485 (58.5)	1485 (58.5)	1485 (58.5)	1485 (58.5)	1485 (58.5)	1485 (58.5)
1210 (47.6), 1160 (45.7)*3	1210 (47.6), 1160 (45.7)*3	1210 (47.6), 1160 (45.7)*3	1210 (47.6), 1160 (45.7)*3	1210 (47.6), 1160 (45.7)*3	1210 (47.6), 1160 (45.7)*3
910 (35.8)	910 (35.8)	910 (35.8)	910 (35.8)	910 (35.8)	910 (35.8)
1025 (40.4)	1025 (40.4)	1025 (40.4)	1025 (40.4)	1025 (40.4)	1025 (40.4)
135 (5.3), 155 (6.1)*4	135 (5.3), 155 (6.1)*4	135 (5.3), 155 (6.1)*4	135 (5.3), 155 (6.1)*4	135 (5.3), 155 (6.1)*4	135 (5.3), 155 (6.1)*4
13.1, 14.5*4/18.7, 20.1*4	13.1, 14.5*4/18.7, 20.1*4	13.1, 14.5*4/18.7, 20.1*4	13.1, 14.5*4/18.7, 20.1*4	13.1, 14.5*4/18.7, 20.1*4	13.1, 14.5*4/18.7, 20.1*4
710 to 750 (1565 to 1653)	710 to 750 (1565 to 1653)	720 to 750 (1587 to 1653)	720 to 750 (1587 to 1653)	740 to 770 (1631 to 1698)	740 to 770 (1631 to 1698)
535 to 560 (1179 to 1235)	535 to 560 (1179 to 1235)	550 to 570 (1213 to 1257)	550 to 570 (1213 to 1257)	550 to 575 (1213 to 1268)	550 to 575 (1213 to 1268)
1245 to 1310 (2744 to 2888)	1245 to 1310 (2744 to 2888)	1270 to 1320 (2800 to 2910)	1270 to 1320 (2800 to 2910)	1290 to 1345 (2844 to 2966)	1290 to 1345 (2844 to 2966)
840 (1852)	840 (1852)	840 (1852)	840 (1852)	840 (1852)	840 (1852)
980 (2161)	980 (2161)	980 (2161)	980 (2161)	980 (2161)	980 (2161)
1820 (4013)	1820 (4013)	1820 (4013)	1820 (4013)	1820 (4013)	1820 (4013)
0.520 (18.4)	0.520 (18.4)	0.520 (18.4)	0.520 (18.4)	0.520 (18.4)	0.520 (18.4)
60 (13.2)	60 (13.2)	60 (13.2)	60 (13.2)	60 (13.2)	60 (13.2)
200 (124)	200 (124)	200 (124)	200 (124)	195 (121)	195 (121)
—	—	—	—	—	—
10.3	10.3	10.3	10.3	11.6	11.6
17.1	17.1	17.1	17.1	17.9	17.9
51 (31)	51 (31)	51 (31)	51 (31)	59 (36)	59 (36)
95 (59)	95 (59)	95 (59)	95 (59)	109 (67)	109 (67)
139 (86)	139 (86)	139 (86)	139 (86)	169 (105)	169 (105)
176 (109)	176 (109)	176 (109)	176 (109)	—	—
5.4 (17.7)	5.4 (17.7)	5.4 (17.7)	5.4 (17.7)	5.4 (17.7)	5.4 (17.7)
5.75 (18.9)	5.75 (18.9)	5.75 (18.9)	5.75 (18.9)	5.75 (18.9)	5.75 (18.9)
1ZZ-FE	1ZZ-FE	1ZZ-FE	1ZZ-FE	1ZZ-FE	1ZZ-FE
4-cylinder, In-line	4-cylinder, In-line	4-cylinder, In-line	4-cylinder, In-line	4-cylinder, In-line	4-cylinder, In-line
16-valve, DOHC with VVT-i	16-valve, DOHC with VVT-i	16-valve, DOHC with VVT-i	16-valve, DOHC with VVT-i	16-valve, DOHC with VVT-i	16-valve, DOHC with VVT-i
79.0×91.5 (3.11×3.60)	79.0×91.5 (3.11×3.60)	79.0×91.5 (3.11×3.60)	79.0×91.5 (3.11×3.60)	79.0×91.5 (3.11×3.60)	79.0×91.5 (3.11×3.60)
1794 (109.5)	1794 (109.5)	1794 (109.5)	1794 (109.5)	1794 (109.5)	1794 (109.5)
10.0 : 1	10.0 : 1	10.0 : 1	10.0 : 1	10.0 : 1	10.0 : 1
EFI	EFI	EFI	EFI	EFI	EFI
95 or higher	95 or higher	95 or higher	95 or higher	95 or higher	95 or higher
95/6000	95/6000	95/6000	95/6000	95/6000	95/6000
170/4200	170/4200	170/4200	170/4200	170/4200	170/4200
12 -32, 48*5	12 -32, 48*5	12 -32, 48*5	12 -32, 48*5	12 -32, 48*5	12 -32, 48*5
1080	1080	1080	1080	1080	1080
1.3	1.3	1.3	1.3	1.3	1.3
C250 (MT)	C250 (MT)	C250 (MT)	C250 (MT)	U341E (AT)	U341E (AT)
3.545	3.545	3.545	3.545	2.847	2.847
1.904	1.904	1.904	1.904	1.552	1.552
1.310	1.310	1.310	1.310	1.000	1.000
1.031	0.969	1.031	0.969	0.700	0.700
0.815	0.815	0.815	0.815	—	—
—	—	—	—	—	—
3.250	3.250	3.250	3.250	2.343	2.343
3.941	3.941	3.941	3.941	4.237	4.237
Ventilated Disc	Ventilated Disc	Ventilated Disc	Ventilated Disc	Ventilated Disc	Ventilated Disc
Solid Disc	Solid Disc	Solid Disc	Solid Disc	Solid Disc	Solid Disc
MacPherson Strut	MacPherson Strut	MacPherson Strut	MacPherson Strut	MacPherson Strut	MacPherson Strut
Double Wishbone	Double Wishbone	Double Wishbone	Double Wishbone	Double Wishbone	Double Wishbone
Standard/Standard	Standard/Standard	Standard/Standard	Standard/Standard	Standard/Standard	Standard/Standard
Rack and Pinion	Rack and Pinion	Rack and Pinion	Rack and Pinion	Rack and Pinion	Rack and Pinion
17.5, 17.3*4	17.5, 17.3*4	17.5, 17.3*4	17.5, 17.3*4	17.5, 17.3*4	17.5, 17.3*4
EPS	EPS	EPS	EPS	EPS	EPS

AP

Area			EUROPE			
Body Type			4-Door Sedan			
Model Code			ZZT251L-AEMGKW	ZZT251L-AEPGKW	AZT250L-AEMEKW	AZT250L-AEPEKW
Major Dimensions & Vehicle Weights						
Overall	Length	mm (in.)	4630 (182.3)	4630 (182.3)	4630 (182.3)	4630 (182.3)
	Width	mm (in.)	1760 (69.3)	1760 (69.3)	1760 (69.3)	1760 (69.3)
	Height	mm (in.)	1480 (58.3)	1480 (58.3)	1480 (58.3)	1480 (58.3)
Wheel Base		mm (in.)	2700 (106.3)	2700 (106.3)	2700 (106.3)	2700 (106.3)
Tread	Front	mm (in.)	1505 (59.3)*1, 1520 (59.8)*2	1505 (59.3)*1, 1520 (59.8)*2	1505 (59.3)*1, 1520 (59.8)*2	1505 (59.3)*1, 1520 (59.8)*2
	Rear	mm (in.)	1500 (59.1)*1, 1520 (59.8)*2	1500 (59.1)*1, 1520 (59.8)*2	1500 (59.1)*1, 1520 (59.8)*2	1500 (59.1)*1, 1520 (59.8)*2
Room	Length	mm (in.)	2090 (82.3)	2090 (82.3)	2090 (82.3)	2090 (82.3)
	Width	mm (in.)	1485 (58.5)	1485 (58.5)	1485 (58.5)	1485 (58.5)
	Height	mm (in.)	1210 (47.6), 1160 (45.7)*3	1210 (47.6), 1160 (45.7)*3	1210 (47.6), 1160 (45.7)*3	1210 (47.6), 1160 (45.7)*3
Overhang	Front	mm (in.)	910 (35.8)	910 (35.8)	910 (35.8)	910 (35.8)
	Rear	mm (in.)	1025 (40.4)	1025 (40.4)	1025 (40.4)	1025 (40.4)
Min. Running Ground Clearance		mm (in.)	135 (5.3), 155 (6.1)*4	135 (5.3), 155 (6.1)*4	135 (5.3), 155 (6.1)*4	135 (5.3), 155 (6.1)*4
Angle of Approach/Departure		degrees	13.1, 14.5*4/18.7, 20.1*4	13.1, 14.5*4/18.7, 20.1*4	13.1, 14.5*4/18.7, 20.1*4	13.1, 14.5*4/18.7, 20.1*4
Curb Weight	Front	kg (lb)	720 to 750 (1587 to 1653)	740 to 770 (1631 to 1698)	765 to 800 (1687 to 1764)	795 to 830 (1753 to 1830)
	Rear	kg (lb)	550 to 570 (1213 to 1257)	550 to 575 (1213 to 1268)	540 to 555 (1190 to 1224)	540 to 555 (1190 to 1224)
	Total	kg (lb)	1270 to 1320 (2800 to 2910)	1290 to 1345 (2844 to 2966)	1305 to 1355 (2877 to 2988)	1335 to 1385 (2943 to 3054)
Gross Vehicle Weight	Front	kg (lb)	840 (1852)	840 (1852)	915 (2017)	915 (2017)
	Rear	kg (lb)	980 (2161)	980 (2161)	975 (2150)	975 (2150)
	Total	kg (lb)	1820 (4013)	1820 (4013)	1890 (4167)	1890 (4167)
Luggage Compartment Capacity		m^3 (cu.ft.)	0.520 (18.4)	0.520 (18.4)	0.520 (18.4)	0.520 (18.4)
Fuel Tank Capacity		L (Us.gal, Imp.gal)	60 (13.2)	60 (13.2)	60 (13.2)	60 (13.2)
Performance						
Max. Speed		km/h (mph)	200 (124)	195 (121)	200 (124)	190 (118)
Max. Cruising Speed		km/h (mph)	—	—	—	—
Acceleration	0 to 100 km/h	sec.	10.3	11.6	9.5	11.1
	0 to 400 m	sec.	17.1	17.9	16.7	17.6
Max. Permissible Speed	1st Gear	km/h (mph)	51 (31)	59 (36)	51 (31)	62 (38)
	2nd Gear	km/h (mph)	95 (59)	109 (67)	88 (54)	111 (68)
	3rd Gear	km/h (mph)	139 (86)	169 (105)	136 (84)	174 (108)
	4th Gear	km/h (mph)	176 (109)	—	177 (109)	—
Min. Turning Radius	Tire	m (ft.)	5.4 (17.7)	5.4 (17.7)	5.6 (18.4)	5.6 (18.4)
	Body	m (ft.)	5.75 (18.9)	5.75 (18.9)	5.995 (19.7)	5.995 (19.7)
Engine						
Engine Type			1ZZ-FE	1ZZ-FE	1AZ-FE	1AZ-FE
No. of Cyls. & Arrangement			4-cylinder, In-line	4-cylinder, In-line	4-cylinder, In-line	4-cylinder, In-line
Valve Mechanism			16-valve, DOHC with VVT-i	16-valve, DOHC with VVT-i	16-valve, DOHC with VVT-i	16-valve, DOHC with VVT-i
Bore × Stroke		mm (in.)	79.0×91.5 (3.11×3.60)	79.0×91.5 (3.11×3.60)	86.0×86.0 (3.39×3.39)	86.0×86.0 (3.39×3.39)
Displacement		cm^3 (cu.in.)	1794 (109.5)	1794 (109.5)	1998 (121.9)	1998 (121.9)
Compression Ratio			10.0 : 1	10.0 : 1	9.8 : 1	9.8 : 1
Fuel System			EFI	EFI	EFI	EFI
Reserch Octane No. or Cetane No.			95 or higher	95 or higher	95 or higher	95 or higher
Max. Output (EEC)		kW/rpm	95/6000	95/6000	108/6000	108/6000
Max. Torque (EEC)		Nm/rpm	170/4200	170/4200	192/4000	192/4000
Engine Electrical						
Battery Capacity (5HR)		Voltage & Amp. hr.	12 -32, 48*5	12 -32, 48*5	12 -32, 48*5	12 -32, 48*5
Alternator Output		Watts	1080	1080	1200	1200
Starter Output		kW	1.3	1.3	1.3	1.3
Chassis						
Transaxle Type			C250 (MT)	U341E (AT)	E354 (MT)	U241E (AT)
Gear Ratio (Counter Gear Ratio Included*6)	1st		3.545	2.847	3.538	3.943
	2nd		1.904	1.552	2.054	2.197
	3rd		1.310	1.000	1.333	1.413
	4th		0.969	0.700	1.028	1.020
	5th		0.815	—	0.820	—
	6th		—	—	—	—
	Reverse		3.250	2.343	3.583	3.145
Differential (Final) Gear Ratio			3.941	4.237	3.944	2.923
Brake Type	Front		Ventilated Disc	Ventilated Disc	Ventilated Disc	Ventilated Disc
	Rear		Solid Disc	Solid Disc	Solid Disc	Solid Disc
Suspension Type	Front		MacPherson Strut	MacPherson Strut	MacPherson Strut	MacPherson Strut
	Rear		Double Wishbone	Double Wishbone	Double Wishbone	Double Wishbone
Stabilizer Bar		Front/Rear	Standard/Standard	Standard/Standard	Standard/Standard	Standard/Standard
Steering Gear Type			Rack and Pinion	Rack and Pinion	Rack and Pinion	Rack and Pinion
Steering Gear Ratio			17.5, 17.3*4	17.5, 17.3*4	16.1, 15.9*4	16.1, 15.9*4
Power Steering Type			EPS	EPS	Integral Type	Integral Type

*1: 205/55R 16 tires, 215/45R 17 tires
*2: 195/65R 15 tires
*3: With Sliding Roof
*4: Rough Road Package
*5: Option
*6: Only for AT

EUROPE					
4-Door Sedan					
AZT250L-AEMGKW	AZT250L-AEPGKW	AZT250R-AEMEHW	AZT250L-AEMEHW	AZT250R-AEPEHW	AZT250L-AEPEHW
4630 (182.3)	4630 (182.3)	4630 (182.3)	4630 (182.3)	4630 (182.3)	4630 (182.3)
1760 (69.3)	1760 (69.3)	1760 (69.3)	1760 (69.3)	1760 (69.3)	1760 (69.3)
1480 (58.3)	1480 (58.3)	1480 (58.3)	1480 (58.3)	1480 (58.3)	1480 (58.3)
2700 (106.3)	2700 (106.3)	2700 (106.3)	2700 (106.3)	2700 (106.3)	2700 (106.3)
1505 (59.3)*1, 1520 (59.8)*2	1505 (59.3)*1, 1520 (59.8)*2	1505 (59.3)*1, 1520 (59.8)*2	1505 (59.3)*1, 1520 (59.8)*2	1505 (59.3)*1, 1520 (59.8)*2	1505 (59.3)*1, 1520 (59.8)*2
1500 (59.1)*1, 1520 (59.8)*2	1500 (59.1)*1, 1520 (59.8)*2	1500 (59.1)*1, 1520 (59.8)*2	1500 (59.1)*1, 1520 (59.8)*2	1500 (59.1)*1, 1520 (59.8)*2	1500 (59.1)*1, 1520 (59.8)*2
2090 (82.3)	2090 (82.3)	2090 (82.3)	2090 (82.3)	2090 (82.3)	2090 (82.3)
1485 (58.5)	1485 (58.5)	1485 (58.5)	1485 (58.5)	1485 (58.5)	1485 (58.5)
1210 (47.6), 1160 (45.7)*3	1210 (47.6), 1160 (45.7)*3	1210 (47.6), 1160 (45.7)*3	1210 (47.6), 1160 (45.7)*3	1210 (47.6), 1160 (45.7)*3	1210 (47.6), 1160 (45.7)*3
910 (35.8)	910 (35.8)	910 (35.8)	910 (35.8)	910 (35.8)	910 (35.8)
1025 (40.4)	1025 (40.4)	1025 (40.4)	1025 (40.4)	1025 (40.4)	1025 (40.4)
135 (5.3), 155 (6.1)*4	135 (5.3), 155 (6.1)*4	135 (5.3), 155 (6.1)*4	135 (5.3), 155 (6.1)*4	135 (5.3), 155 (6.1)*4	135 (5.3), 155 (6.1)*4
13.1, 14.5*4/18.7, 20.1*4	13.1, 14.5*4/18.7, 20.1*4	13.1, 14.5*4/18.7, 20.1*4	13.1, 14.5*4/18.7, 20.1*4	13.1, 14.5*4/18.7, 20.1*4	13.1, 14.5*4/18.7, 20.1*4
765 to 800 (1687 to 1764)	795 to 830 (1753 to 1830)	770 to 800 (1698 to 1764)	770 to 800 (1698 to 1764)	800 to 830 (1764 to 1830)	800 to 830 (1764 to 1830)
540 to 555 (1190 to 1224)	540 to 555 (1190 to 1224)	560 to 575 (1235 to 1268)	560 to 575 (1235 to 1268)	560 to 575 (1235 to 1268)	560 to 575 (1235 to 1268)
1305 to 1355 (2877 to 2988)	1335 to 1385 (2943 to 3054)	1330 to 1375 (2933 to 3032)	1330 to 1375 (2933 to 3032)	1360 to 1405 (2999 to 3098)	1360 to 1405 (2999 to 3098)
915 (2017)	915 (2017)	915 (2017)	915 (2017)	915 (2017)	915 (2017)
975 (2150)	975 (2150)	980 (2161)	980 (2161)	980 (2161)	980 (2161)
1890 (4167)	1890 (4167)	1895 (4178)	1895 (4178)	1895 (4178)	1895 (4178)
0.520 (18.4)	0.520 (18.4)	0.520 (18.4)	0.520 (18.4)	0.520 (18.4)	0.520 (18.4)
60 (13.2)	60 (13.2)	60 (13.2)	60 (13.2)	60 (13.2)	60 (13.2)
200 (124)	190 (118)	210 (131)	210 (131)	205 (127)	205 (127)
—	—	—	—	—	—
9.5	11.1	9.4	9.4	11.1	11.1
16.7	17.6	16.6	16.6	17.6	17.6
51 (31)	62 (38)	56 (34)	56 (34)	63 (39)	63 (39)
88 (54)	111 (68)	96 (59)	96 (59)	114 (71)	114 (71)
136 (84)	174 (108)	149 (92)	149 (92)	177 (110)	177 (110)
177 (109)	—	193 (119)	193 (119)	—	—
5.6 (18.4)	5.6 (18.4)	5.6 (18.4)	5.6 (18.4)	5.6 (18.4)	5.6 (18.4)
5.995 (19.7)	5.995 (19.7)	5.995 (19.7)	5.995 (19.7)	5.995 (19.7)	5.995 (19.7)
1AZ-FE	1AZ-FE	1AZ-FSE	1AZ-FSE	1AZ-FSE	1AZ-FSE
4-cylinder, In-line	4-cylinder, In-line	4-cylinder, In-line	4-cylinder, In-line	4-cylinder, In-line	4-cylinder, In-line
16-valve, DOHC with VVT-i	16-valve, DOHC with VVT-i	16-valve, DOHC with VVT-i	16-valve, DOHC with VVT-i	16-valve, DOHC with VVT-i	16-valve, DOHC with VVT-i
86.0×86.0 (3.39×3.39)	86.0×86.0 (3.39×3.39)	86.0×86.0 (3.39×3.39)	86.0×86.0 (3.39×3.39)	86.0×86.0 (3.39×3.39)	86.0×86.0 (3.39×3.39)
1998 (121.9)	1998 (121.9)	1998 (121.9)	1998 (121.9)	1998 (121.9)	1998 (121.9)
9.8 : 1	9.8 : 1	11.0 : 1	11.0 : 1	11.0 : 1	11.0 : 1
EFI	EFI	EFI	EFI	EFI	EFI
95 or higher	95 or higher	95 or higher	95 or higher	95 or higher	95 or higher
108/6000	108/6000	108/5700	108/5700	108/5700	108/5700
192/4000	192/4000	196/4000	196/4000	196/4000	196/4000
12 -32, 48*5	12 -32, 48*5	12 -32, 48*5	12 -32, 48*5	12 - 48	12 - 48
1200	1200	1200	1200	1200	1200
1.3	1.3	1.3, 1.6*5	1.3, 1.6*5	1.6	1.6
E354 (MT)	U241E (AT)	E354 (MT)	E354 (MT)	U241E (AT)	U241E (AT)
3.538	3.943	3.538	3.538	3.943	3.943
2.054	2.197	2.054	2.054	2.197	2.197
1.333	1.413	1.333	1.333	1.413	1.413
1.028	1.020	1.028	1.028	1.020	1.020
0.820	—	0.820	0.820	—	—
—	—	—	—	—	—
3.583	3.145	3.583	3.583	3.145	3.145
3.944	2.923	3.684	3.684	2.923	2.923
Ventilated Disc	Ventilated Disc	Ventilated Disc	Ventilated Disc	Ventilated Disc	Ventilated Disc
Solid Disc	Solid Disc	Solid Disc	Solid Disc	Solid Disc	Solid Disc
MacPherson Strut	MacPherson Strut	MacPherson Strut	MacPherson Strut	MacPherson Strut	MacPherson Strut
Double Wishbone	Double Wishbone	Double Wishbone	Double Wishbone	Double Wishbone	Double Wishbone
Standard/Standard	Standard/Standard	Standard/Standard	Standard/Standard	Standard/Standard	Standard/Standard
Rack and Pinion	Rack and Pinion	Rack and Pinion	Rack and Pinion	Rack and Pinion	Rack and Pinion
16.1, 15.9*4	16.1, 15.9*4	16.1, 15.9*4	16.1, 15.9*4	16.1, 15.9*4	16.1, 15.9*4
Integral Type	Integral Type	Integral Type	Integral Type	Integral Type	Integral Type

AP

Area			EUROPE			
Body Type			4-Door Sedan			
Model Code			AZT250R-AEMGHW	AZT250L-AEMGHW	AZT250R-AEPGHW	AZT250L-AEPGHW
Major Dimensions & Vehicle Weights						
Overall	Length	mm (in.)	4630 (182.3)	4630 (182.3)	4630 (182.3)	4630 (182.3)
	Width	mm (in.)	1760 (69.3)	1760 (69.3)	1760 (69.3)	1760 (69.3)
	Height	mm (in.)	1480 (58.3)	1480 (58.3)	1480 (58.3)	1480 (58.3)
Wheel Base		mm (in.)	2700 (106.3)	2700 (106.3)	2700 (106.3)	2700 (106.3)
Tread	Front	mm (in.)	1505 (59.3)*1, 1520 (59.8)*2	1505 (59.3)*1, 1520 (59.8)*2	1505 (59.3)*1, 1520 (59.8)*2	1505 (59.3)*1, 1520 (59.8)*2
	Rear	mm (in.)	1500 (59.1)*1, 1520 (59.8)*2	1500 (59.1)*1, 1520 (59.8)*2	1500 (59.1)*1, 1520 (59.8)*2	1500 (59.1)*1, 1520 (59.8)*2
Room	Length	mm (in.)	2090 (82.3)	2090 (82.3)	2090 (82.3)	2090 (82.3)
	Width	mm (in.)	1485 (58.5)	1485 (58.5)	1485 (58.5)	1485 (58.5)
	Height	mm (in.)	1210 (47.6), 1160 (45.7)*3	1210 (47.6), 1160 (45.7)*3	1210 (47.6), 1160 (45.7)*3	1210 (47.6), 1160 (45.7)*3
Overhang	Front	mm (in.)	910 (35.8)	910 (35.8)	910 (35.8)	910 (35.8)
	Rear	mm (in.)	1025 (40.4)	1025 (40.4)	1025 (40.4)	1025 (40.4)
Min. Running Ground Clearance		mm (in.)	135 (5.3), 155 (6.1)*4	135 (5.3), 155 (6.1)*4	135 (5.3), 155 (6.1)*4	135 (5.3), 155 (6.1)*4
Angle of Approach/Departure		degrees	13.1, 14.5*4/18.7, 20.1*4	13.1, 14.5*4/18.7, 20.1*4	13.1, 14.5*4/18.7, 20.1*4	13.1, 14.5*4/18.7, 20.1*4
Curb Weight	Front	kg (lb)	770 to 800 (1698 to 1764)	770 to 800 (1698 to 1764)	800 to 830 (1764 to 1830)	800 to 830 (1764 to 1830)
	Rear	kg (lb)	560 to 575 (1235 to 1268)	560 to 575 (1235 to 1268)	560 to 575 (1235 to 1268)	560 to 575 (1235 to 1268)
	Total	kg (lb)	1330 to 1375 (2933 to 3032)	1330 to 1375 (2933 to 3032)	1360 to 1405 (2999 to 3098)	1360 to 1405 (2999 to 3098)
Gross Vehicle Weight	Front	kg (lb)	915 (2017)	915 (2017)	915 (2017)	915 (2017)
	Rear	kg (lb)	980 (2161)	980 (2161)	980 (2161)	980 (2161)
	Total	kg (lb)	1895 (4178)	1895 (4178)	1895 (4178)	1895 (4178)
Luggage Compartment Capacity		m^3 (cu.ft.)	0.520 (18.4)	0.520 (18.4)	0.520 (18.4)	0.520 (18.4)
Fuel Tank Capacity		L (Us.gal, Imp.gal)	60 (13.2)	60 (13.2)	60 (13.2)	60 (13.2)
Performance						
Max. Speed		km/h (mph)	210 (131)	210 (131)	205 (127)	205 (127)
Max. Cruising Speed		km/h (mph)	—	—	—	—
Acceleration	0 to 100 km/h	sec.	9.4	9.4	11.1	11.1
	0 to 400 m	sec.	16.6	16.6	17.6	17.6
Max. Permissible Speed	1st Gear	km/h (mph)	56 (34)	56 (34)	63 (39)	63 (39)
	2nd Gear	km/h (mph)	96 (59)	96 (59)	114 (71)	114 (71)
	3rd Gear	km/h (mph)	149 (92)	149 (92)	177 (110)	177 (110)
	4th Gear	km/h (mph)	193 (119)	193 (119)	—	—
Min. Turning Radius	Tire	m (ft.)	5.6 (18.4)	5.6 (18.4)	5.6 (18.4)	5.6 (18.4)
	Body	m (ft.)	5.995 (19.7)	5.995 (19.7)	5.995 (19.7)	5.995 (19.7)
Engine						
Engine Type			1AZ-FSE	1AZ-FSE	1AZ-FSE	1AZ-FSE
No. of Cyls. & Arrangement			4-cylinder, In-line	4-cylinder, In-line	4-cylinder, In-line	4-cylinder, In-line
Valve Mechanism			16-valve, DOHC with VVT-i	16-valve, DOHC with VVT-i	16-valve, DOHC with VVT-i	16-valve, DOHC with VVT-i
Bore × Stroke		mm (in.)	86.0×86.0 (3.39×3.39)	86.0×86.0 (3.39×3.39)	86.0×86.0 (3.39×3.39)	86.0×86.0 (3.39×3.39)
Displacement		cm^3 (cu.in.)	1998 (121.9)	1998 (121.9)	1998 (121.9)	1998 (121.9)
Compression Ratio			11.0 : 1	11.0 : 1	11.0 : 1	11.0 : 1
Fuel System			EFI	EFI	EFI	EFI
Reserch Octane No. or Cetane No.			95 or higher	95 or higher	95 or higher	95 or higher
Max. Output (EEC)		kW/rpm	108/5700	108/5700	108/5700	108/5700
Max. Torque (EEC)		Nm/rpm	196/4000	196/4000	196/4000	196/4000
Engine Electrical						
Battery Capacity (5HR)		Voltage & Amp. hr.	12 -32, 48*5	12 -32, 48*5	12 - 48	12 - 48
Alternator Output		Watts	1200	1200	1200	1200
Starter Output		kW	1.3, 1.6*5	1.3, 1.6*5	1.6	1.6
Chassis						
Transaxle Type			E354 (MT)	E354 (MT)	U241E (AT)	U241E (AT)
Gear Ratio (Counter Gear Ratio Included*6)	1st		3.538	3.538	3.943	3.943
	2nd		2.054	2.054	2.197	2.197
	3rd		1.333	1.333	1.413	1.413
	4th		1.028	1.028	1.020	1.020
	5th		0.820	0.820	—	—
	6th		—	—	—	—
	Reverse		3.583	3.583	3.145	3.145
Differential (Final) Gear Ratio			3.684	3.684	2.923	2.923
Brake Type	Front		Ventilated Disc	Ventilated Disc	Ventilated Disc	Ventilated Disc
	Rear		Solid Disc	Solid Disc	Solid Disc	Solid Disc
Suspension Type	Front		MacPherson Strut	MacPherson Strut	MacPherson Strut	MacPherson Strut
	Rear		Double Wishbone	Double Wishbone	Double Wishbone	Double Wishbone
Stabilizer Bar		Front/Rear	Standard/Standard	Standard/Standard	Standard/Standard	Standard/Standard
Steering Gear Type			Rack and Pinion	Rack and Pinion	Rack and Pinion	Rack and Pinion
Steering Gear Ratio			16.1, 15.9*4	16.1, 15.9*4	16.1, 15.9*4	16.1, 15.9*4
Power Steering Type			Integral Type	Integral Type	Integral Type	Integral Type

*1: 205/55R 16 tires, 215/45R 17 tires
*2: 195/65R 15 tires
*3: With Sliding Roof
*4: Rough Road Package
*5: Option
*6: Only for AT

EUROPE					
4-Door Sedan					
AZT251L-AEAEHW	AZT251R-AEAGHW	AZT251L-AEAGHW	CDT250R-AEMNYW	CDT250L-AEMNYW	CDT250R-AEMEYW
4630 (182.3)	4630 (182.3)	4630 (182.3)	4630 (182.3)	4630 (182.3)	4630 (182.3)
1760 (69.3)	1760 (69.3)	1760 (69.3)	1760 (69.3)	1760 (69.3)	1760 (69.3)
1480 (58.3)	1480 (58.3)	1480 (58.3)	1480 (58.3)	1480 (58.3)	1480 (58.3)
2700 (106.3)	2700 (106.3)	2700 (106.3)	2700 (106.3)	2700 (106.3)	2700 (106.3)
1505 (59.3)*1, 1520 (59.8)*2	1505 (59.3)*1, 1520 (59.8)*2	1505 (59.3)*1, 1520 (59.8)*2	1505 (59.3)*1, 1520 (59.8)*2	1505 (59.3)*1, 1520 (59.8)*2	1505 (59.3)*1, 1520 (59.8)*2
1500 (59.1)*1, 1520 (59.8)*2	1500 (59.1)*1, 1520 (59.8)*2	1500 (59.1)*1, 1520 (59.8)*2	1500 (59.1)*1, 1520 (59.8)*2	1500 (59.1)*1, 1520 (59.8)*2	1500 (59.1)*1, 1520 (59.8)*2
2090 (82.3)	2090 (82.3)	2090 (82.3)	2090 (82.3)	2090 (82.3)	2090 (82.3)
1485 (58.5)	1485 (58.5)	1485 (58.5)	1485 (58.5)	1485 (58.5)	1485 (58.5)
1210 (47.6), 1160 (45.7)*3	1210 (47.6), 1160 (45.7)*3	1210 (47.6), 1160 (45.7)*3	1210 (47.6), 1160 (45.7)*3	1210 (47.6), 1160 (45.7)*3	1210 (47.6), 1160 (45.7)*3
910 (35.8)	910 (35.8)	910 (35.8)	910 (35.8)	910 (35.8)	910 (35.8)
1025 (40.4)	1025 (40.4)	1025 (40.4)	1025 (40.4)	1025 (40.4)	1025 (40.4)
135 (5.3), 155 (6.1)*4	135 (5.3), 155 (6.1)*4	135 (5.3), 155 (6.1)*4	135 (5.3), 155 (6.1)*4	135 (5.3), 155 (6.1)*4	135 (5.3), 155 (6.1)*4
13.1, 14.5*4/18.7, 20.1*4	13.1, 14.5*4/18.7, 20.1*4	13.1, 14.5*4/18.7, 20.1*4	13.1, 14.5*4/18.7, 20.1*4	13.1, 14.5*4/18.7, 20.1*4	13.1, 14.5*4/18.7, 20.1*4
820 to 850 (1806 to 1872)	820 to 850 (1806 to 1872)	820 to 850 (1806 to 1872)	845 to 895 (1863 to 1973)	845 to 895 (1863 to 1973)	845 to 900 (1863 to 1984)
555 to 570 (1222 to 1256)	555 to 570 (1222 to 1256)	555 to 570 (1222 to 1256)	535 to 550 (1179 to 1213)	535 to 550 (1179 to 1213)	535 to 565 (1179 to 1246)
1375 to 1420 (3029 to 3128)	1375 to 1420 (3029 to 3128)	1375 to 1420 (3029 to 3128)	1380 to 1445 (3042 to 3186)	1380 to 1445 (3042 to 3186)	1380 to 1465 (3042 to 3230)
935 (2059)	935 (2059)	935 (2059)	985 (2172)	985 (2172)	985 (2172)
970 (2137)	970 (2137)	970 (2137)	985 (2172)	985 (2172)	985 (2172)
1905 (4196)	1905 (4196)	1905 (4196)	1970 (4344)	1970 (4344)	1970 (4344)
0.520 (18.4)	0.520 (18.4)	0.520 (18.4)	0.520 (18.4)	0.520 (18.4)	0.520 (18.4)
60 (13.2)	60 (13.2)	60 (13.2)	60 (13.2)	60 (13.2)	60 (13.2)
220 (138)	220 (138)	220 (138)	195 (121)	195 (121)	195 (121)
—	—	—	—	—	—
9.3	9.3	9.3	11.2	11.2	11.2
16.7	16.7	16.7	17.7	17.7	17.7
45 (27)	45 (27)	45 (27)	45 (27)	45 (27)	45 (27)
84 (52)	84 (52)	84 (52)	84 (52)	84 (52)	84 (52)
128 (79)	128 (79)	128 (79)	128 (79)	128 (79)	128 (79)
176 (109)	176 (109)	176 (109)	176 (109)	176 (109)	176 (109)
5.6 (18.4)	5.6 (18.4)	5.6 (18.4)	5.6 (18.4)	5.6 (18.4)	5.6 (18.4)
5.995 (19.7)	5.995 (19.7)	5.995 (19.7)	5.995 (19.7)	5.995 (19.7)	5.995 (19.7)
2AZ-FSE	2AZ-FSE	2AZ-FSE	1CD-FTV	1CD-FTV	1CD-FTV
4-cylinder, In-line	4-cylinder, In-line	4-cylinder, In-line	4-cylinder, In-line	4-cylinder, In-line	4-cylinder, In-line
16-valve, DOHC with VVT-i	16-valve, DOHC with VVT-i	16-valve, DOHC with VVT-i	16-Valve, DOHC	16-Valve, DOHC	16-Valve, DOHC
88.5×96.0 (3.48×3.78)	88.5×96.0 (3.48×3.78)	88.5×96.0 (3.48×3.78)	82.2×94.0 (3.24×3.70)	82.2×94.0 (3.24×3.70)	82.2×94.0 (3.24×3.70)
2362 (144.2)	2362 (144.2)	2362 (144.2)	1995 (121.7)	1995 (121.7)	1995 (121.7)
11.0 : 1	11.0 : 1	11.0 : 1	17.8 : 1	17.8 : 1	17.8 : 1
EFI	EFI	EFI	Common-Rail Type	Common-Rail Type	Common-Rail Type
95 or higher	95 or higher	95 or higher	48 or higher	48 or higher	48 or higher
120/5800	120/5800	120/5800	85/3600	85/3600	85/3600
230/4000	230/4000	230/4000	280/2000-2200	280/2000-2200	280/2000-2200
12 - 48	12 - 48	12 - 48	12 - 60	12 - 60	12 - 60
1200	1200	1200	1200, 1080*5	1200, 1080*5	1200
1.6	1.6	1.6	2.0	2.0	2.0
U151E (AT)	U151E (AT)	U151E (AT)	E357 (MT)	E357 (MT)	E357 (MT)
4.235	4.235	4.235	3.538	3.538	3.538
2.360	2.360	2.360	1.913	1.913	1.913
1.517	1.517	1.517	1.258	1.258	1.258
1.047	1.047	1.047	0.918	0.918	0.918
0.756	0.756	0.756	0.690	0.690	0.690
—	—	—	—	—	—
3.378	3.378	3.378	3.583	3.583	3.583
3.478	3.478	3.478	3.684	3.684	3.684
Ventilated Disc	Ventilated Disc	Ventilated Disc	Ventilated Disc	Ventilated Disc	Ventilated Disc
Solid Disc	Solid Disc	Solid Disc	Solid Disc	Solid Disc	Solid Disc
MacPherson Strut	MacPherson Strut	MacPherson Strut	MacPherson Strut	MacPherson Strut	MacPherson Strut
Double Wishbone	Double Wishbone	Double Wishbone	Double Wishbone	Double Wishbone	Double Wishbone
Standard/Standard	Standard/Standard	Standard/Standard	Standard/Standard	Standard/Standard	Standard/Standard
Rack and Pinion	Rack and Pinion	Rack and Pinion	Rack and Pinion	Rack and Pinion	Rack and Pinion
16.1, 15.9*4	16.1, 15.9*4	16.1, 15.9*4	16.1, 15.9*4	16.1, 15.9*4	16.1, 15.9*4
Integral Type	Integral Type	Integral Type	Integral Type	Integral Type	Integral Type

AP

Area			EUROPE			
Body Type			4-Door Sedan			
Model Code			CDT250L-AEMEYW	CDT250L-AEMGYW	ADT251R-AEFNYW	ADT251L-AEFNYW
Major Dimensions & Vehicle Weights						
Overall	Length	mm (in.)	4630 (182.3)	4630 (182.3)	4630 (182.3)	4630 (182.3)
	Width	mm (in.)	1760 (69.3)	1760 (69.3)	1760 (69.3)	1760 (69.3)
	Height	mm (in.)	1480 (58.3)	1480 (58.3)	1480 (58.3)	1480 (58.3)
Wheel Base		mm (in.)	2700 (106.3)	2700 (106.3)	2700 (106.3)	2700 (106.3)
Tread	Front	mm (in.)	1505 (59.3)*1, 1520 (59.8)*2	1505 (59.3)*1, 1520 (59.8)*2	1505 (59.3)	1505 (59.3)
	Rear	mm (in.)	1500 (59.1)*1, 1520 (59.8)*2	1500 (59.1)*1, 1520 (59.8)*2	1510 (59.4)	1510 (59.4)
Room	Length	mm (in.)	2090 (82.3)	2090 (82.3)	2090 (82.3)	2090 (82.3)
	Width	mm (in.)	1485 (58.5)	1485 (58.5)	1485 (58.5)	1485 (58.5)
	Height	mm (in.)	1210 (47.6), 1160 (45.7)*3	1210 (47.6), 1160 (45.7)*3	1210 (47.6), 1160 (45.7)*3	1210 (47.6), 1160 (45.7)*3
Overhang	Front	mm (in.)	910 (35.8)	910 (35.8)	910 (35.8)	910 (35.8)
	Rear	mm (in.)	1025 (40.4)	1025 (40.4)	1025 (40.4)	1025 (40.4)
Min. Running Ground Clearance		mm (in.)	135 (5.3), 155 (6.1)*4	135 (5.3), 155 (6.1)*4	135 (5.3), 155 (6.1)*4	135 (5.3), 155 (6.1)*4
Angle of Approach/Departure		degrees	13.1, 14.5*4/18.7, 20.1*4	13.1, 14.5*4/18.7, 20.1*4	13.1, 14.5*4/18.7, 20.1*4	13.1, 14.5*4/18.7, 20.1*4
Curb Weight	Front	kg (lb)	845 to 900 (1863 to 1984)	845 to 900 (1863 to 1984)	895 to 930 (1973 to 2050)	895 to 930 (1973 to 2050)
	Rear	kg (lb)	535 to 565 (1179 to 1246)	535 to 565 (1179 to 1246)	540 to 550 (1191 to 1213)	540 to 550 (1191 to 1213)
	Total	kg (lb)	1380 to 1465 (3042 to 3230)	1380 to 1465 (3042 to 3230)	1435 to 1480 (3164 to 3263)	1435 to 1480 (3164 to 3263)
Gross Vehicle Weight	Front	kg (lb)	985 (2172)	985 (2172)	1025 (2260)	1025 (2260)
	Rear	kg (lb)	985 (2172)	985 (2172)	945 (2083)	945 (2083)
	Total	kg (lb)	1970 (4344)	1970 (4344)	1970 (4344)	1970 (4344)
Luggage Compartment Capacity		m^3 (cu.ft.)	0.520 (18.4)	0.520 (18.4)	0.520 (18.4)	0.520 (18.4)
Fuel Tank Capacity		L (Us.gal, Imp.gal)	60 (13.2)	60 (13.2)	60 (13.2)	60 (13.2)
Performance						
Max. Speed		km/h (mph)	195 (121)	195 (121)	210 (131)	210 (131)
Max. Cruising Speed		km/h (mph)	—	—	—	—
Acceleration	0 to 100 km/h	sec.	11.2	11.2	9.3	9.3
	0 to 400 m	sec.	17.7	17.7	16.7	16.7
Max. Permissible Speed	1st Gear	km/h (mph)	45 (27)	45 (27)	44 (27)	44 (27)
	2nd Gear	km/h (mph)	84 (52)	84 (52)	82 (50)	82 (50)
	3rd Gear	km/h (mph)	128 (79)	128 (79)	129 (80)	129 (80)
	4th Gear	km/h (mph)	176 (109)	176 (109)	183 (114)	183 (114)
Min. Turning Radius	Tire	m (ft.)	5.6 (18.4)	5.6 (18.4)	5.6 (18.4)	5.6 (18.4)
	Body	m (ft.)	5.995 (19.7)	5.995 (19.7)	5.995 (19.7)	5.995 (19.7)
Engine						
Engine Type			1CD-FTV	1CD-FTV	2AD-FTV	2AD-FTV
No. of Cyls. & Arrangement			4-cylinder, In-line	4-cylinder, In-line	4-cylinder, In-line	4-cylinder, In-line
Valve Mechanism			16-Valve, DOHC	16-Valve, DOHC	16-Valve, DOHC	16-Valve, DOHC
Bore × Stroke		mm (in.)	82.2×94.0 (3.24×3.70)	82.2×94.0 (3.24×3.70)	86.0×96.0 (3.39×3.78)	86.0×96.0 (3.39×3.78)
Displacement		cm^3 (cu.in.)	1995 (121.7)	1995 (121.7)	2231 (136.1)	2231 (136.1)
Compression Ratio			17.8 : 1	17.8 : 1	16.8 : 1	16.8 : 1
Fuel System			Common-Rail Type	Common-Rail Type	Common-Rail Type	Common-Rail Type
Reserch Octane No. or Cetane No.			48 or higher	48 or higher	48 or higher	48 or higher
Max. Output (EEC)		kW/rpm	85/3600	85/3600	110/3600	110/3600
Max. Torque (EEC)		Nm/rpm	280/2000-2200	280/2000-2200	310/2000-3200	310/2000-3200
Engine Electrical						
Battery Capacity (5HR)		Voltage & Amp. hr.	12 - 60	12 - 60	12 - 67	12 - 67
Alternator Output		Watts	1200	1200	1200	1200
Starter Output		kW	2.0	2.0	2.0	2.0
Chassis						
Transaxle Type			E357 (MT)	E357 (MT)	EA61 (MT)	EA61 (MT)
Gear Ratio (Counter Gear Ratio Included*6)	1st		3.538	3.538	3.538	3.538
	2nd		1.913	1.913	1.913	1.913
	3rd		1.258	1.258	1.218	1.218
	4th		0.918	0.918	0.860	0.860
	5th		0.690	0.690	0.790	0.790
	6th		—	—	0.673	0.673
	Reverse		3.583	3.583	3.831	3.831
Differential (Final) Gear Ratio			3.684	3.684	3.777*7/3.238*8	3.777*7/3.238*8
Brake Type	Front		Ventilated Disc	Ventilated Disc	Ventilated Disc	Ventilated Disc
	Rear		Solid Disc	Solid Disc	Solid Disc	Solid Disc
Suspension Type	Front		MacPherson Strut	MacPherson Strut	MacPherson Strut	MacPherson Strut
	Rear		Double Wishbone	Double Wishbone	Double Wishbone	Double Wishbone
Stabilizer Bar		Front/Rear	Standard/Standard	Standard/Standard	Standard/Standard	Standard/Standard
Steering Gear Type			Rack and Pinion	Rack and Pinion	Rack and Pinion	Rack and Pinion
Steering Gear Ratio			16.1, 15.9*4	16.1, 15.9*4	16.1, 15.9*4	16.1, 15.9*4
Power Steering Type			Integral Type	Integral Type	Integral Type	Integral Type

*1: 205/55R 16 tires, 215/45R 17 tires
*2: 195/65R 15 tires
*3: With Sliding Roof
*4: Rough Road Package
*5: Option
*6: Only for AT
*7: For 1st to 4th
*8: For 5th, 6th, Reverse

EUROPE					
4-Door Sedan					
ADT251R-AEFEYW	ADT251L-AEFEYW	ADT251R-AEFGYW	ADT251L-AEFGYW	ADT251R-AEFEXW	ADT251L-AEFEXW
4630 (182.3)	4630 (182.3)	4630 (182.3)	4630 (182.3)	4630 (182.3)	4630 (182.3)
1760 (69.3)	1760 (69.3)	1760 (69.3)	1760 (69.3)	1760 (69.3)	1760 (69.3)
1480 (58.3)	1480 (58.3)	1480 (58.3)	1480 (58.3)	1480 (58.3)	1480 (58.3)
2700 (106.3)	2700 (106.3)	2700 (106.3)	2700 (106.3)	2700 (106.3)	2700 (106.3)
1505 (59.3)	1505 (59.3)	1505 (59.3)	1505 (59.3)	1505 (59.3)	1505 (59.3)
1510 (59.4)	1510 (59.4)	1510 (59.4)	1510 (59.4)	1510 (59.4)	1510 (59.4)
2090 (82.3)	2090 (82.3)	2090 (82.3)	2090 (82.3)	2090 (82.3)	2090 (82.3)
1485 (58.5)	1485 (58.5)	1485 (58.5)	1485 (58.5)	1485 (58.5)	1485 (58.5)
1210 (47.6), 1160 (45.7)*3	1210 (47.6), 1160 (45.7)*3	1210 (47.6), 1160 (45.7)*3	1210 (47.6), 1160 (45.7)*3	1210 (47.6), 1160 (45.7)*3	1210 (47.6), 1160 (45.7)*3
910 (35.8)	910 (35.8)	910 (35.8)	910 (35.8)	910 (35.8)	910 (35.8)
1025 (40.4)	1025 (40.4)	1025 (40.4)	1025 (40.4)	1025 (40.4)	1025 (40.4)
135 (5.3), 155 (6.1)*4	135 (5.3), 155 (6.1)*4	135 (5.3), 155 (6.1)*4	135 (5.3), 155 (6.1)*4	135 (5.3), 155 (6.1)*4	135 (5.3), 155 (6.1)*4
13.1, 14.5*4/18.7, 20.1*4	13.1, 14.5*4/18.7, 20.1*4	13.1, 14.5*4/18.7, 20.1*4	13.1, 14.5*4/18.7, 20.1*4	13.1, 14.5*4/18.7, 20.1*4	13.1, 14.5*4/18.7, 20.1*4
895 to 930 (1973 to 2050)	895 to 930 (1973 to 2050)	895 to 930 (1973 to 2050)	895 to 930 (1973 to 2050)	900 to 935 (1984 to 2061)	900 to 935 (1984 to 2061)
555 to 570 (1224 to 1256)	555 to 570 (1224 to 1256)	555 to 570 (1224 to 1256)	555 to 570 (1224 to 1256)	555 to 570 (1224 to 1256)	555 to 570 (1224 to 1256)
1450 to 1500 (3197 to 3307)	1450 to 1500 (3197 to 3307)	1450 to 1500 (3197 to 3307)	1450 to 1500 (3197 to 3307)	1455 to 1505 (3208 to 3318)	1455 to 1505 (3208 to 3318)
1025 (2260)	1025 (2260)	1025 (2260)	1025 (2260)	1025 (2260)	1025 (2260)
945 (2083)	945 (2083)	945 (2083)	945 (2083)	945 (2083)	945 (2083)
1970 (4344)	1970 (4344)	1970 (4344)	1970 (4344)	1970 (4344)	1970 (4344)
0.520 (18.4)	0.520 (18.4)	0.520 (18.4)	0.520 (18.4)	0.520 (18.4)	0.520 (18.4)
60 (13.2)	60 (13.2)	60 (13.2)	60 (13.2)	60 (13.2)	60 (13.2)
210 (131)	210 (131)	210 (131)	210 (131)	220 (138)	220 (138)
—	—	—	—	—	—
9.3	9.3	9.3	9.3	8.6	8.6
16.7	16.7	16.7	16.7	16.3	16.3
44 (27)	44 (27)	44 (27)	44 (27)	44 (27)	44 (27)
82 (50)	82 (50)	82 (50)	82 (50)	82 (50)	82 (50)
129 (80)	129 (80)	129 (80)	129 (80)	129 (80)	129 (80)
183 (114)	183 (114)	183 (114)	183 (114)	183 (114)	183 (114)
5.6 (18.4)	5.6 (18.4)	5.6 (18.4)	5.6 (18.4)	5.6 (18.4)	5.6 (18.4)
5.995 (19.7)	5.995 (19.7)	5.995 (19.7)	5.995 (19.7)	5.995 (19.7)	5.995 (19.7)
2AD-FTV	2AD-FTV	2AD-FTV	2AD-FTV	2AD-FHV	2AD-FHV
4-cylinder, In-line	4-cylinder, In-line	4-cylinder, In-line	4-cylinder, In-line	4-cylinder, In-line	4-cylinder, In-line
16-Valve, DOHC	16-Valve, DOHC	16-Valve, DOHC	16-Valve, DOHC	16-Valve, DOHC	16-Valve, DOHC
86.0×96.0 (3.39×3.78)	86.0×96.0 (3.39×3.78)	86.0×96.0 (3.39×3.78)	86.0×96.0 (3.39×3.78)	86.0×96.0 (3.39×3.78)	86.0×96.0 (3.39×3.78)
2231 (136.1)	2231 (136.1)	2231 (136.1)	2231 (136.1)	2231 (136.1)	2231 (136.1)
16.8 : 1	16.8 : 1	16.8 : 1	16.8 : 1	15.8 : 1	15.8 : 1
Common-Rail Type	Common-Rail Type	Common-Rail Type	Common-Rail Type	Common-Rail Type	Common-Rail Type
48 or higher	48 or higher	48 or higher	48 or higher	48 or higher	48 or higher
110/3600	110/3600	110/3600	110/3600	130/3600	130/3600
310/2000-3200	310/2000-3200	310/2000-3200	310/2000-3200	400/2000-2600	400/2000-2600
12 - 67	12 - 67	12 - 67	12 - 67	12 - 67	12 - 67
1200	1200	1200	1200	1200	1200
2.0	2.0	2.0	2.0	2.0	2.0
EA61 (MT)	EA61 (MT)	EA61 (MT)	EA61 (MT)	EA60 (MT)	EA60 (MT)
3.538	3.538	3.538	3.538	3.538	3.538
1.913	1.913	1.913	1.913	1.913	1.913
1.218	1.218	1.218	1.218	1.218	1.218
0.860	0.860	0.860	0.860	0.860	0.860
0.790	0.790	0.790	0.790	0.790	0.790
0.673	0.673	0.673	0.673	0.638	0.638
3.831	3.831	3.831	3.831	3.831	3.831
3.777*7/3.238*8	3.777*7/3.238*8	3.777*7/3.238*8	3.777*7/3.238*8	3.777*7/3.238*8	3.777*7/3.238*8
Ventilated Disc	Ventilated Disc	Ventilated Disc	Ventilated Disc	Ventilated Disc	Ventilated Disc
Solid Disc	Solid Disc	Solid Disc	Solid Disc	Solid Disc	Solid Disc
MacPherson Strut	MacPherson Strut	MacPherson Strut	MacPherson Strut	MacPherson Strut	MacPherson Strut
Double Wishbone	Double Wishbone	Double Wishbone	Double Wishbone	Double Wishbone	Double Wishbone
Standard/Standard	Standard/Standard	Standard/Standard	Standard/Standard	Standard/Standard	Standard/Standard
Rack and Pinion	Rack and Pinion	Rack and Pinion	Rack and Pinion	Rack and Pinion	Rack and Pinion
16.1, 15.9*4	16.1, 15.9*4	16.1, 15.9*4	16.1, 15.9*4	16.1, 15.9*4	16.1, 15.9*4
Integral Type	Integral Type	Integral Type	Integral Type	Integral Type	Integral Type

Area			EUROPE			
Body Type			4-Door Sedan		5-Door Liftback	
Model Code			ADT251R-AEFGXW	ADT251L-AEFGXW	ZZT250R-ALMNKW	ZZT250L-ALMNKW
Major Dimensions & Vehicle Weights						
Overall	Length	mm (in.)	4630 (182.3)	4630 (182.3)	4630 (182.3)	4630 (182.3)
	Width	mm (in.)	1760 (69.3)	1760 (69.3)	1760 (69.3)	1760 (69.3)
	Height	mm (in.)	1480 (58.3)	1480 (58.3)	1480 (58.3)	1480 (58.3)
Wheel Base		mm (in.)	2700 (106.3)	2700 (106.3)	2700 (106.3)	2700 (106.3)
Tread	Front	mm (in.)	1505 (59.3)	1505 (59.3)	1505 (59.3)*1, 1520 (59.8)*2	1505 (59.3)*1, 1520 (59.8)*2
	Rear	mm (in.)	1510 (59.4)	1510 (59.4)	1500 (59.1)*1, 1520 (59.8)*2	1500 (59.1)*1, 1520 (59.8)*2
Room	Length	mm (in.)	2090 (82.3)	2090 (82.3)	2090 (82.3)	2090 (82.3)
	Width	mm (in.)	1485 (58.5)	1485 (58.5)	1485 (58.5)	1485 (58.5)
	Height	mm (in.)	1210 (47.6), 1160 (45.7)*3	1210 (47.6), 1160 (45.7)*3	1210 (47.6), 1160 (45.7)*3	1210 (47.6), 1160 (45.7)*3
Overhang	Front	mm (in.)	910 (35.8)	910 (35.8)	910 (35.8)	910 (35.8)
	Rear	mm (in.)	1025 (40.4)	1025 (40.4)	1025 (40.4)	1025 (40.4)
Min. Running Ground Clearance		mm (in.)	135 (5.3), 155 (6.1)*4	135 (5.3), 155 (6.1)*4	135 (5.3), 155 (6.1)*4	135 (5.3), 155 (6.1)*4
Angle of Approach/Departure		degrees	13.1, 14.5*4/18.7, 20.1*4	13.1, 14.5*4/18.7, 20.1*4	13.1, 14.5*4/18.7, 20.1*4	13.1, 14.5*4/18.7, 20.1*4
Curb Weight	Front	kg (lb)	900 to 935 (1984 to 2061)	900 to 935 (1984 to 2061)	710 to 750 (1565 to 1653)	710 to 750 (1565 to 1653)
	Rear	kg (lb)	555 to 570 (1224 to 1256)	555 to 570 (1224 to 1256)	555 to 570 (1224 to 1257)	555 to 570 (1224 to 1257)
	Total	kg (lb)	1455 to 1505 (3208 to 3318)	1455 to 1505 (3208 to 3318)	1265 to 1320 (2789 to 2910)	1265 to 1320 (2789 to 2910)
Gross Vehicle Weight	Front	kg (lb)	1025 (2260)	1025 (2260)	840 (1852)	840 (1852)
	Rear	kg (lb)	945 (2083)	945 (2083)	980 (2161)	980 (2161)
	Total	kg (lb)	1970 (4344)	1970 (4344)	1820 (4013)	1820 (4013)
Luggage Compartment Capacity		m^3 (cu.ft.)	0.520 (18.4)	0.520 (18.4)	0.510 (18.0)	0.510 (18.0)
Fuel Tank Capacity		L (Us.gal, Imp.gal)	60 (13.2)	60 (13.2)	60 (13.2)	60 (13.2)
Performance						
Max. Speed		km/h (mph)	220 (138)	220 (138)	195 (121)	195 (121)
Max. Cruising Speed		km/h (mph)	—	—	—	—
Acceleration	0 to 100 km/h	sec.	8.6	8.6	12.0	12.0
	0 to 400 m	sec.	16.3	16.3	18.1	18.1
Max. Permissible Speed	1st Gear	km/h (mph)	44 (27)	44 (27)	47 (29)	47 (29)
	2nd Gear	km/h (mph)	82 (50)	82 (50)	87 (54)	87 (54)
	3rd Gear	km/h (mph)	129 (80)	129 (80)	127 (78)	127 (78)
	4th Gear	km/h (mph)	183 (114)	183 (114)	172 (106)	172 (106)
Min. Turning Radius	Tire	m (ft.)	5.6 (18.4)	5.6 (18.4)	5.4 (17.7)	5.4 (17.7)
	Body	m (ft.)	5.995 (19.7)	5.995 (19.7)	5.75 (18.9)	5.75 (18.9)
Engine						
Engine Type			2AD-FHV	2AD-FHV	3ZZ-FE	3ZZ-FE
No. of Cyls. & Arrangement			4-cylinder, In-line	4-cylinder, In-line	4-cylinder, In-line	4-cylinder, In-line
Valve Mechanism			16-Valve, DOHC	16-Valve, DOHC	16-valve, DOHC with VVT-i	16-valve, DOHC with VVT-i
Bore × Stroke		mm (in.)	86.0×96.0 (3.39×3.78)	86.0×96.0 (3.39×3.78)	79.0×81.5 (3.11×3.21)	79.0×81.5 (3.11×3.21)
Displacement		cm^3 (cu.in.)	2231 (136.1)	2231 (136.1)	1598 (97.5)	1598 (97.5)
Compression Ratio			15.8 : 1	15.8 : 1	10.5	10.5
Fuel System			Common-Rail Type	Common-Rail Type	EFI	EFI
Reserch Octane No. or Cetane No.			48 or higher	48 or higher	95 or higher	95 or higher
Max. Output (EEC)		kW/rpm	130/3600	130/3600	81/6000	81/6000
Max. Torque (EEC)		Nm/rpm	400/2000-2600	400/2000-2600	150/3800	150/3800
Engine Electrical						
Battery Capacity (5HR)		Voltage & Amp. hr.	12 - 67	12 - 67	12 -32, 48*5	12 -32, 48*5
Alternator Output		Watts	1200	1200	1080	1080
Starter Output		kW	2.0	2.0	1.3	1.3
Chassis						
Transaxle Type			EA60 (MT)	EA60 (MT)	C50 (MT)	C50 (MT)
Gear Ratio (Counter Gear Ratio Included*6)	1st		3.538	3.538	3.545	3.545
	2nd		1.913	1.913	1.904	1.904
	3rd		1.218	1.218	1.310	1.310
	4th		0.860	0.860	0.969	0.969
	5th		0.790	0.790	0.815	0.815
	6th		0.638	0.638	—	—
	Reverse		3.831	3.831	3.250	3.250
Differential (Final) Gear Ratio			3.777*7/3.238*8	3.777*7/3.238*8	4.312	4.312
Brake Type	Front		Ventilated Disc	Ventilated Disc	Ventilated Disc	Ventilated Disc
	Rear		Solid Disc	Solid Disc	Solid Disc	Solid Disc
Suspension Type	Front		MacPherson Strut	MacPherson Strut	MacPherson Strut	MacPherson Strut
	Rear		Double Wishbone	Double Wishbone	Double Wishbone	Double Wishbone
Stabilizer Bar		Front/Rear	Standard/Standard	Standard/Standard	Standard/Standard	Standard/Standard
Steering Gear Type			Rack and Pinion	Rack and Pinion	Rack and Pinion	Rack and Pinion
Steering Gear Ratio			16.1, 15.9*4	16.1, 15.9*4	17.5, 17.3*4	17.5, 17.3*4
Power Steering Type			Integral Type	Integral Type	EPS	EPS

*1: 205/55R 16 tires, 215/45R 17 tires
*2: 195/65R 15 tires
*3: With Sliding Roof
*4: Rough Road Package
*5: Option
*6: Only for AT
*7: For 1st to 4th
*8: For 5th, 6th, Reverse

EUROPE					
5-Door Liftback					
ZZT251R-ALMNKW	ZZT251L-ALMNKW	ZZT251R-ALPNKW	ZZT251R-ALMEKW	ZZT251L-ALMEKW	ZZT251R-ALPEKW
4630 (182.3)	4630 (182.3)	4630 (182.3)	4630 (182.3)	4630 (182.3)	4630 (182.3)
1760 (69.3)	1760 (69.3)	1760 (69.3)	1760 (69.3)	1760 (69.3)	1760 (69.3)
1480 (58.3)	1480 (58.3)	1480 (58.3)	1480 (58.3)	1480 (58.3)	1480 (58.3)
2700 (106.3)	2700 (106.3)	2700 (106.3)	2700 (106.3)	2700 (106.3)	2700 (106.3)
1505 (59.3)*1, 1520 (59.8)*2	1505 (59.3)*1, 1520 (59.8)*2	1505 (59.3)*1, 1520 (59.8)*2	1505 (59.3)*1, 1520 (59.8)*2	1505 (59.3)*1, 1520 (59.8)*2	1505 (59.3)*1, 1520 (59.8)*2
1500 (59.1)*1, 1520 (59.8)*2	1500 (59.1)*1, 1520 (59.8)*2	1500 (59.1)*1, 1520 (59.8)*2	1500 (59.1)*1, 1520 (59.8)*2	1500 (59.1)*1, 1520 (59.8)*2	1500 (59.1)*1, 1520 (59.8)*2
2090 (82.3)	2090 (82.3)	2090 (82.3)	2090 (82.3)	2090 (82.3)	2090 (82.3)
1485 (58.5)	1485 (58.5)	1485 (58.5)	1485 (58.5)	1485 (58.5)	1485 (58.5)
1210 (47.6), 1160 (45.7)*3	1210 (47.6), 1160 (45.7)*3	1210 (47.6), 1160 (45.7)*3	1210 (47.6), 1160 (45.7)*3	1210 (47.6), 1160 (45.7)*3	1210 (47.6), 1160 (45.7)*3
910 (35.8)	910 (35.8)	910 (35.8)	910 (35.8)	910 (35.8)	910 (35.8)
1025 (40.4)	1025 (40.4)	1025 (40.4)	1025 (40.4)	1025 (40.4)	1025 (40.4)
135 (5.3), 155 (6.1)*4	135 (5.3), 155 (6.1)*4	135 (5.3), 155 (6.1)*4	135 (5.3), 155 (6.1)*4	135 (5.3), 155 (6.1)*4	135 (5.3), 155 (6.1)*4
13.1, 14.5*4/18.7, 20.1*4	13.1, 14.5*4/18.7, 20.1*4	13.1, 14.5*4/18.7, 20.1*4	13.1, 14.5*4/18.7, 20.1*4	13.1, 14.5*4/18.7, 20.1*4	13.1, 14.5*4/18.7, 20.1*4
710 to 750 (1565 to 1653)	710 to 750 (1565 to 1653)	730 to 770 (1609 to 1698)	720 to 750 (1587 to 1653)	720 to 750 (1587 to 1653)	730 to 770 (1609 to 1698)
555 to 580 (1224 to 1279)	555 to 580 (1224 to 1279)	555 to 580 (1224 to 1279)	555 to 580 (1224 to 1279)	555 to 580 (1224 to 1279)	555 to 580 (1224 to 1279)
1265 to 1330 (2789 to 2932)	1265 to 1330 (2789 to 2932)	1285 to 1350 (2833 to 2977)	1275 to 1330 (2811 to 2932)	1275 to 1330 (2811 to 2932)	1285 to 1350 (2833 to 2977)
840 (1852)	840 (1852)	840 (1852)	840 (1852)	840 (1852)	840 (1852)
980 (2161)	980 (2161)	980 (2161)	980 (2161)	980 (2161)	980 (2161)
1820 (4013)	1820 (4013)	1820 (4013)	1820 (4013)	1820 (4013)	1820 (4013)
0.510 (18.0)	0.510 (18.0)	0.510 (18.0)	0.510 (18.0)	0.510 (18.0)	0.510 (18.0)
60 (13.2)	60 (13.2)	60 (13.2)	60 (13.2)	60 (13.2)	60 (13.2)
200 (124)	200 (124)	195 (121)	200 (124)	200 (124)	195 (121)
—	—	—	—	—	—
10.3	10.3	11.6	10.3	10.3	11.6
17.1	17.1	17.9	17.1	17.1	17.9
51 (31)	51 (31)	59 (36)	51 (31)	51 (31)	59 (36)
95 (59)	95 (59)	109 (67)	95 (59)	95 (59)	109 (67)
139 (86)	139 (86)	169 (105)	139 (86)	139 (86)	169 (105)
176 (109)	176 (109)	—	176 (109)	176 (109)	—
5.4 (17.7)	5.4 (17.7)	5.4 (17.7)	5.4 (17.7)	5.4 (17.7)	5.4 (17.7)
5.75 (18.9)	5.75 (18.9)	5.75 (18.9)	5.75 (18.9)	5.75 (18.9)	5.75 (18.9)
1ZZ-FE	1ZZ-FE	1ZZ-FE	1ZZ-FE	1ZZ-FE	1ZZ-FE
4-cylinder, In-line	4-cylinder, In-line	4-cylinder, In-line	4-cylinder, In-line	4-cylinder, In-line	4-cylinder, In-line
16-valve, DOHC with VVT-i	16-valve, DOHC with VVT-i	16-valve, DOHC with VVT-i	16-valve, DOHC with VVT-i	16-valve, DOHC with VVT-i	16-valve, DOHC with VVT-i
79.0×91.5 (3.11×3.60)	79.0×91.5 (3.11×3.60)	79.0×91.5 (3.11×3.60)	79.0×91.5 (3.11×3.60)	79.0×91.5 (3.11×3.60)	79.0×91.5 (3.11×3.60)
1794 (109.5)	1794 (109.5)	1794 (109.5)	1794 (109.5)	1794 (109.5)	1794 (109.5)
10.0	10.0	10.0	10.0	10.0	10.0
EFI	EFI	EFI	EFI	EFI	EFI
95 or higher	95 or higher	95 or higher	95 or higher	95 or higher	95 or higher
95/6000	95/6000	95/6000	95/6000	95/6000	95/6000
170/4200	170/4200	170/4200	170/4200	170/4200	170/4200
12 -32, 48*5	12 -32, 48*5	12 -32, 48*5	12 -32, 40*5	12 -32, 40*5	12 -32, 40*5
1080	1080	1080	1080	1080	1080
1.3	1.3	1.3	1.3	1.3	1.3
C250 (MT)	C250 (MT)	U341E (AT)	C250 (MT)	C250 (MT)	U341E (AT)
3.545	3.545	2.847	3.545	3.545	2.847
1.904	1.904	1.552	1.904	1.904	1.552
1.310	1.310	1.000	1.310	1.310	1.000
1.031	1.031	0.700	1.031	1.031	0.700
0.815	0.815	—	0.815	0.815	—
—	—	—	—	—	—
3.250	3.250	2.343	3.250	3.250	2.343
3.941	3.941	4.237	3.941	3.941	4.237
Ventilated Disc	Ventilated Disc	Ventilated Disc	Ventilated Disc	Ventilated Disc	Ventilated Disc
Solid Disc	Solid Disc	Solid Disc	Solid Disc	Solid Disc	Solid Disc
MacPherson Strut	MacPherson Strut	MacPherson Strut	MacPherson Strut	MacPherson Strut	MacPherson Strut
Double Wishbone	Double Wishbone	Double Wishbone	Double Wishbone	Double Wishbone	Double Wishbone
Standard/Standard	Standard/Standard	Standard/Standard	Standard/Standard	Standard/Standard	Standard/Standard
Rack and Pinion	Rack and Pinion	Rack and Pinion	Rack and Pinion	Rack and Pinion	Rack and Pinion
17.5, 17.3*4	17.5, 17.3*4	17.5, 17.3*4	17.5, 17.3*4	17.5, 17.3*4	17.5, 17.3*4
EPS	EPS	EPS	EPS	EPS	EPS

AP

Area			EUROPE			
Body Type			5-Door Liftback			
Model Code			ZZT251L-ALPEKW	ZZT251L-ALMGKW	ZZT251L-ALPGKW	AZT250R-ALMEHW
Major Dimensions & Vehicle Weights						
Overall	Length	mm (in.)	4630 (182.3)	4630 (182.3)	4630 (182.3)	4630 (182.3)
	Width	mm (in.)	1760 (69.3)	1760 (69.3)	1760 (69.3)	1760 (69.3)
	Height	mm (in.)	1480 (58.3)	1480 (58.3)	1480 (58.3)	1480 (58.3)
Wheel Base		mm (in.)	2700 (106.3)	2700 (106.3)	2700 (106.3)	2700 (106.3)
Tread	Front	mm (in.)	1505 (59.3)*1, 1520 (59.8)*2	1505 (59.3)*1, 1520 (59.8)*2	1505 (59.3)*1, 1520 (59.8)*2	1505 (59.3)*1, 1520 (59.8)*2
	Rear	mm (in.)	1500 (59.1)*1, 1520 (59.8)*2	1500 (59.1)*1, 1520 (59.8)*2	1500 (59.1)*1, 1520 (59.8)*2	1500 (59.1)*1, 1520 (59.8)*2
Room	Length	mm (in.)	2090 (82.3)	2090 (82.3)	2090 (82.3)	2090 (82.3)
	Width	mm (in.)	1485 (58.5)	1485 (58.5)	1485 (58.5)	1485 (58.5)
	Height	mm (in.)	1210 (47.6), 1160 (45.7)*3	1210 (47.6), 1160 (45.7)*3	1210 (47.6), 1160 (45.7)*3	1210 (47.6), 1160 (45.7)*3
Overhang	Front	mm (in.)	910 (35.8)	910 (35.8)	910 (35.8)	910 (35.8)
	Rear	mm (in.)	1025 (40.4)	1025 (40.4)	1025 (40.4)	1025 (40.4)
Min. Running Ground Clearance		mm (in.)	135 (5.3), 155 (6.1)*4	135 (5.3), 155 (6.1)*4	135 (5.3), 155 (6.1)*4	135 (5.3), 155 (6.1)*4
Angle of Approach/Departure		degrees	13.1, 14.5*4/18.7, 20.1*4	13.1, 14.5*4/18.7, 20.1*4	13.1, 14.5*4/18.7, 20.1*4	13.1, 14.5*4/18.7, 20.1*4
Curb Weight	Front	kg (lb)	730 to 770 (1609 to 1698)	720 to 750 (1587 to 1653)	730 to 770 (1609 to 1698)	770 to 800 (1698 to 1764)
	Rear	kg (lb)	555 to 580 (1224 to 1279)	555 to 580 (1224 to 1279)	555 to 580 (1224 to 1279)	565 to 580 (1246 to 1279)
	Total	kg (lb)	1285 to 1350 (2833 to 2977)	1275 to 1330 (2811 to 2932)	1285 to 1350 (2833 to 2977)	1335 to 1380 (2944 to 3043)
Gross Vehicle Weight	Front	kg (lb)	840 (1852)	840 (1852)	840 (1852)	915 (2017)
	Rear	kg (lb)	980 (2161)	980 (2161)	980 (2161)	980 (2161)
	Total	kg (lb)	1820 (4013)	1820 (4013)	1820 (4013)	1895 (4178)
Luggage Compartment Capacity		m^3 (cu.ft.)	0.510 (18.0)	0.510 (18.0)	0.510 (18.0)	0.510 (18.0)
Fuel Tank Capacity		L (Us.gal, Imp.gal)	60 (13.2)	60 (13.2)	60 (13.2)	60 (13.2)
Performance						
Max. Speed		km/h (mph)	195 (121)	200 (124)	195 (121)	210 (131)
Max. Cruising Speed		km/h (mph)	—	—	—	—
Acceleration	0 to 100 km/h	sec.	11.6	10.3	11.6	9.4
	0 to 400 m	sec.	17.9	17.1	17.9	16.6
Max. Permissible Speed	1st Gear	km/h (mph)	59 (36)	51 (31)	59 (36)	56 (34)
	2nd Gear	km/h (mph)	109 (67)	95 (59)	109 (67)	96 (59)
	3rd Gear	km/h (mph)	169 (105)	139 (86)	169 (105)	149 (92)
	4th Gear	km/h (mph)	—	176 (109)	—	193 (119)
Min. Turning Radius	Tire	m (ft.)	5.4 (17.7)	5.4 (17.7)	5.4 (17.7)	5.6 (18.4)
	Body	m (ft.)	5.75 (18.9)	5.75 (18.9)	5.75 (18.9)	5.995 (19.7)
Engine						
Engine Type			1ZZ-FE	1ZZ-FE	1ZZ-FE	1AZ-FSE
No. of Cyls. & Arrangement			4-cylinder, In-line	4-cylinder, In-line	4-cylinder, In-line	4-cylinder, In-line
Valve Mechanism			16-valve, DOHC with VVT-i	16-valve, DOHC with VVT-i	16-valve, DOHC with VVT-i	16-valve, DOHC with VVT-i
Bore × Stroke		mm (in.)	79.0×91.5 (3.11×3.60)	79.0×91.5 (3.11×3.60)	79.0×91.5 (3.11×3.60)	86.0×86.0 (3.39×3.39)
Displacement		cm^3 (cu.in.)	1794 (109.5)	1794 (109.5)	1794 (109.5)	1998 (121.9)
Compression Ratio			10.0	10.0	10.0	11.0
Fuel System			EFI	EFI	EFI	EFI
Reserch Octane No. or Cetane No.			95 or higher	95 or higher	95 or higher	95 or higher
Max. Output (EEC)		kW/rpm	95/6000	95/6000	95/6000	108/5700
Max. Torque (EEC)		Nm/rpm	170/4200	170/4200	170/4200	196/4000
Engine Electrical						
Battery Capacity (5HR)		Voltage & Amp. hr.	12 -32, 40*5	12 -32, 40*5	12 -32, 40*5	12 -32, 40*5
Alternator Output		Watts	1080	1080	1080	1200
Starter Output		kW	1.3	1.3	1.3	1.3, 1.6*5
Chassis						
Transaxle Type			U341E (AT)	C250 (MT)	U341E (AT)	E354 (MT)
Gear Ratio (Counter Gear Ratio Included*6)	1st		2.847	3.545	2.847	3.538
	2nd		1.552	1.904	1.552	2.054
	3rd		1.000	1.310	1.000	1.333
	4th		0.700	1.031	0.700	1.028
	5th		—	0.815	—	0.820
	6th		—	—	—	—
	Reverse		2.343	3.250	2.343	3.583
Differential (Final) Gear Ratio			4.237	3.941	4.237	3.684
Brake Type	Front		Ventilated Disc	Ventilated Disc	Ventilated Disc	Ventilated Disc
	Rear		Solid Disc	Solid Disc	Solid Disc	Solid Disc
Suspension Type	Front		MacPherson Strut	MacPherson Strut	MacPherson Strut	MacPherson Strut
	Rear		Double Wishbone	Double Wishbone	Double Wishbone	Double Wishbone
Stabilizer Bar		Front/Rear	Standard/Standard	Standard/Standard	Standard/Standard	Standard/Standard
Steering Gear Type			Rack and Pinion	Rack and Pinion	Rack and Pinion	Rack and Pinion
Steering Gear Ratio			17.5, 17.3*4	17.5, 17.3*4	17.5, 17.3*4	16.1, 15.9*4
Power Steering Type			EPS	EPS	EPS	Integral Type

*1: 205/55R 16 tires, 215/45R 17 tires
*2: 195/65R 15 tires
*3: With Sliding Roof
*4: Rough Road Package
*5: Option
*6: Only for AT

EUROPE					
5-Door Liftback					
AZT250L-ALMEHW	AZT250R-ALPEHW	AZT250L-ALPEHW	AZT250L-ALMGHW	AZT250L-ALPGHW	AZT251L-ALAEHW
4630 (182.3)	4630 (182.3)	4630 (182.3)	4630 (182.3)	4630 (182.3)	4630 (182.3)
1760 (69.3)	1760 (69.3)	1760 (69.3)	1760 (69.3)	1760 (69.3)	1760 (69.3)
1480 (58.3)	1480 (58.3)	1480 (58.3)	1480 (58.3)	1480 (58.3)	1480 (58.3)
2700 (106.3)	2700 (106.3)	2700 (106.3)	2700 (106.3)	2700 (106.3)	2700 (106.3)
1505 (59.3)*1, 1520 (59.8)*2	1505 (59.3)*1, 1520 (59.8)*2	1505 (59.3)*1, 1520 (59.8)*2	1505 (59.3)*1, 1520 (59.8)*2	1505 (59.3)*1, 1520 (59.8)*2	1505 (59.3)*1, 1520 (59.8)*2
1500 (59.1)*1, 1520 (59.8)*2	1500 (59.1)*1, 1520 (59.8)*2	1500 (59.1)*1, 1520 (59.8)*2	1500 (59.1)*1, 1520 (59.8)*2	1500 (59.1)*1, 1520 (59.8)*2	1500 (59.1)*1, 1520 (59.8)*2
2090 (82.3)	2090 (82.3)	2090 (82.3)	2090 (82.3)	2090 (82.3)	2090 (82.3)
1485 (58.5)	1485 (58.5)	1485 (58.5)	1485 (58.5)	1485 (58.5)	1485 (58.5)
1210 (47.6), 1160 (45.7)*3	1210 (47.6), 1160 (45.7)*3	1210 (47.6), 1160 (45.7)*3	1210 (47.6), 1160 (45.7)*3	1210 (47.6), 1160 (45.7)*3	1210 (47.6), 1160 (45.7)*3
910 (35.8)	910 (35.8)	910 (35.8)	910 (35.8)	910 (35.8)	910 (35.8)
1025 (40.4)	1025 (40.4)	1025 (40.4)	1025 (40.4)	1025 (40.4)	1025 (40.4)
135 (5.3), 155 (6.1)*4	135 (5.3), 155 (6.1)*4	135 (5.3), 155 (6.1)*4	135 (5.3), 155 (6.1)*4	135 (5.3), 155 (6.1)*4	135 (5.3), 155 (6.1)*4
13.1, 14.5*4/18.7, 20.1*4	13.1, 14.5*4/18.7, 20.1*4	13.1, 14.5*4/18.7, 20.1*4	13.1, 14.5*4/18.7, 20.1*4	13.1, 14.5*4/18.7, 20.1*4	13.1, 14.5*4/18.7, 20.1*4
770 to 800 (1698 to 1764)	800 to 835 (1764 to 1841)	800 to 835 (1764 to 1841)	770 to 800 (1698 to 1764)	800 to 835 (1764 to 1841)	820 to 850 (1806 to 1872)
565 to 580 (1246 to 1279)	565 to 585 (1246 to 1290)	565 to 585 (1246 to 1290)	565 to 580 (1246 to 1279)	565 to 585 (1246 to 1290)	560 to 575 (1233 to 1267)
1335 to 1380 (2944 to 3043)	1365 to 1420 (3010 to 3131)	1365 to 1420 (3010 to 3131)	1335 to 1380 (2944 to 3043)	1365 to 1420 (3010 to 3131)	1380 to 1435 (3040 to 3161)
915 (2017)	915 (2017)	915 (2017)	915 (2017)	915 (2017)	935 (2059)
980 (2161)	980 (2161)	980 (2161)	980 (2161)	980 (2161)	970 (2137)
1895 (4178)	1895 (4178)	1895 (4178)	1895 (4178)	1895 (4178)	1905 (4196)
0.510 (18.0)	0.510 (18.0)	0.510 (18.0)	0.510 (18.0)	0.510 (18.0)	0.510 (18.0)
60 (13.2)	60 (13.2)	60 (13.2)	60 (13.2)	60 (13.2)	60 (13.2)
210 (131)	205 (127)	205 (127)	210 (131)	205 (127)	220 (138)
—	—	—	—	—	—
9.4	11.1	11.1	9.4	11.1	9.3
16.6	17.6	17.6	16.6	17.6	16.7
56 (34)	63 (39)	63 (39)	56 (34)	63 (39)	45 (27)
96 (59)	114 (71)	114 (71)	96 (59)	114 (71)	84 (52)
149 (92)	177 (110)	177 (110)	149 (92)	177 (110)	128 (79)
193 (119)	—	—	193 (119)	—	176 (109)
5.6 (18.4)	5.6 (18.4)	5.6 (18.4)	5.6 (18.4)	5.6 (18.4)	5.6 (18.4)
5.995 (19.7)	5.995 (19.7)	5.995 (19.7)	5.995 (19.7)	5.995 (19.7)	5.995 (19.7)
1AZ-FSE	1AZ-FSE	1AZ-FSE	1AZ-FSE	1AZ-FSE	2AZ-FSE
4-cylinder, In-line	4-cylinder, In-line	4-cylinder, In-line	4-cylinder, In-line	4-cylinder, In-line	4-cylinder, In-line
16-valve, DOHC with VVT-i	16-valve, DOHC with VVT-i	16-valve, DOHC with VVT-i	16-valve, DOHC with VVT-i	16-valve, DOHC with VVT-i	16-valve, DOHC with VVT-i
86.0×86.0 (3.39×3.39)	86.0×86.0 (3.39×3.39)	86.0×86.0 (3.39×3.39)	86.0×86.0 (3.39×3.39)	86.0×86.0 (3.39×3.39)	88.5×96.0 (3.48×3.78)
1998 (121.9)	1998 (121.9)	1998 (121.9)	1998 (121.9)	1998 (121.9)	2362 (144.2)
11.0	11.0	11.0	11.0	11.0	11.0
EFI	EFI	EFI	EFI	EFI	EFI
95 or higher	95 or higher	95 or higher	95 or higher	95 or higher	95 or higher
108/5700	108/5700	108/5700	108/5700	108/5700	120/5800
196/4000	196/4000	196/4000	196/4000	196/4000	230/4000
12 -32, 40*5	12 - 48	12 - 48	12 -32, 40*5	12 - 48	12 - 48
1200	1200	1200	1200	1200	1200
1.3, 1.6*5	1.6	1.6	1.3, 1.6*5	1.6	1.6
E354 (MT)	U241E (AT)	U241E (AT)	E354 (MT)	U241E (AT)	U151E (AT)
3.538	3.943	3.943	3.538	3.943	4.235
2.054	2.197	2.197	2.054	2.197	2.360
1.333	1.413	1.413	1.333	1.413	1.517
1.028	1.020	1.020	1.028	1.020	1.047
0.820	—	—	0.820	—	0.756
—	—	—	—	—	—
3.583	3.145	3.145	3.583	3.145	3.378
3.684	2.923	2.923	3.684	2.923	3.478
Ventilated Disc	Ventilated Disc	Ventilated Disc	Ventilated Disc	Ventilated Disc	Ventilated Disc
Solid Disc	Solid Disc	Solid Disc	Solid Disc	Solid Disc	Solid Disc
MacPherson Strut	MacPherson Strut	MacPherson Strut	MacPherson Strut	MacPherson Strut	MacPherson Strut
Double Wishbone	Double Wishbone	Double Wishbone	Double Wishbone	Double Wishbone	Double Wishbone
Standard/Standard	Standard/Standard	Standard/Standard	Standard/Standard	Standard/Standard	Standard/Standard
Rack and Pinion	Rack and Pinion	Rack and Pinion	Rack and Pinion	Rack and Pinion	Rack and Pinion
16.1, 15.9*4	16.1, 15.9*4	16.1, 15.9*4	16.1, 15.9*4	16.1, 15.9*4	16.1, 15.9*4
Integral Type	Integral Type	Integral Type	Integral Type	Integral Type	Integral Type

Area			EUROPE			
Body Type			5-Door Liftback			
Model Code			AZT251R-ALAGHW	AZT251L-ALAGHW	CDT250R-ALMNYW	CDT250L-ALMNYW
Major Dimensions & Vehicle Weights						
Overall	Length	mm (in.)	4630 (182.3)	4630 (182.3)	4630 (182.3)	4630 (182.3)
	Width	mm (in.)	1760 (69.3)	1760 (69.3)	1760 (69.3)	1760 (69.3)
	Height	mm (in.)	1480 (58.3)	1480 (58.3)	1480 (58.3)	1480 (58.3)
Wheel Base		mm (in.)	2700 (106.3)	2700 (106.3)	2700 (106.3)	2700 (106.3)
Tread	Front	mm (in.)	1505 (59.3)*1, 1520 (59.8)*2	1505 (59.3)*1, 1520 (59.8)*2	1505 (59.3)*1, 1520 (59.8)*2	1505 (59.3)*1, 1520 (59.8)*2
	Rear	mm (in.)	1500 (59.1)*1, 1520 (59.8)*2	1500 (59.1)*1, 1520 (59.8)*2	1500 (59.1)*1, 1520 (59.8)*2	1500 (59.1)*1, 1520 (59.8)*2
Room	Length	mm (in.)	2090 (82.3)	2090 (82.3)	2090 (82.3)	2090 (82.3)
	Width	mm (in.)	1485 (58.5)	1485 (58.5)	1485 (58.5)	1485 (58.5)
	Height	mm (in.)	1210 (47.6), 1160 (45.7)*3	1210 (47.6), 1160 (45.7)*3	1210 (47.6), 1160 (45.7)*3	1210 (47.6), 1160 (45.7)*3
Overhang	Front	mm (in.)	910 (35.8)	910 (35.8)	910 (35.8)	910 (35.8)
	Rear	mm (in.)	1025 (40.4)	1025 (40.4)	1025 (40.4)	1025 (40.4)
Min. Running Ground Clearance		mm (in.)	135 (5.3), 155 (6.1)*4	135 (5.3), 155 (6.1)*4	135 (5.3), 155 (6.1)*4	135 (5.3)
Angle of Approach/Departure		degrees	13.1, 14.5*4/18.7, 20.1*4	13.1, 14.5*4/18.7, 20.1*4	13.1, 14.5*4/18.7, 20.1*4	13.1/18.7
Curb Weight	Front	kg (lb)	820 to 850 (1806 to 1872)	820 to 850 (1806 to 1872)	845 to 895 (1863 to 1973)	845 to 895 (1863 to 1973)
	Rear	kg (lb)	560 to 575 (1233 to 1267)	560 to 575 (1233 to 1267)	555 to 565 (1224 to 1246)	555 to 565 (1224 to 1246)
	Total	kg (lb)	1380 to 1435 (3040 to 3161)	1380 to 1435 (3040 to 3161)	1400 to 1460 (3087 to 3219)	1400 to 1460 (3087 to 3219)
Gross Vehicle Weight	Front	kg (lb)	935 (2059)	935 (2059)	985 (2172)	985 (2172)
	Rear	kg (lb)	970 (2137)	970 (2137)	985 (2172)	985 (2172)
	Total	kg (lb)	1905 (4196)	1905 (4196)	1970 (4344)	1970 (4344)
Luggage Compartment Capacity		m^3 (cu.ft.)	0.510 (18.0)	0.510 (18.0)	0.510 (18.0)	0.510 (18.0)
Fuel Tank Capacity		L (Us.gal, Imp.gal)	60 (13.2)	60 (13.2)	60 (13.2)	60 (13.2)
Performance						
Max. Speed		km/h (mph)	220 (138)	220 (138)	195 (121)	195 (121)
Max. Cruising Speed		km/h (mph)	—	—	—	—
Acceleration	0 to 100 km/h	sec.	9.3	9.3	11.2	11.2
	0 to 400 m	sec.	16.7	16.7	17.7	17.7
Max. Permissible Speed	1st Gear	km/h (mph)	45 (27)	45 (27)	45 (27)	45 (27)
	2nd Gear	km/h (mph)	84 (52)	84 (52)	84 (52)	84 (52)
	3rd Gear	km/h (mph)	128 (79)	128 (79)	128 (79)	128 (79)
	4th Gear	km/h (mph)	176 (109)	176 (109)	176 (109)	176 (109)
Min. Turning Radius	Tire	m (ft.)	5.6 (18.4)	5.6 (18.4)	5.6 (18.4)	5.6 (18.4)
	Body	m (ft.)	5.995 (19.7)	5.995 (19.7)	5.995 (19.7)	5.995 (19.7)
Engine						
Engine Type			2AZ-FSE	2AZ-FSE	1CD-FTV	1CD-FTV
No. of Cyls. & Arrangement			4-cylinder, In-line	4-cylinder, In-line	4-cylinder, In-line	4-cylinder, In-line
Valve Mechanism			16-valve, DOHC with VVT-i	16-valve, DOHC with VVT-i	16-Valve, DOHC	16-Valve, DOHC
Bore × Stroke		mm (in.)	88.5×96.0 (3.48×3.78)	88.5×96.0 (3.48×3.78)	82.2×94.0 (3.24×3.70)	82.2×94.0 (3.24×3.70)
Displacement		cm^3 (cu.in.)	2362 (144.2)	2362 (144.2)	1995 (121.7)	1995 (121.7)
Compression Ratio			11.0	11.0	17.8	17.8
Fuel System			EFI	EFI	Common-Rail Type	Common-Rail Type
Reserch Octane No. or Cetane No.			95 or higher	95 or higher	48 or higher	48 or higher
Max. Output (EEC)		kW/rpm	120/5800	120/5800	85/3600	85/3600
Max. Torque (EEC)		Nm/rpm	230/4000	230/4000	280/2000-2200	280/2000-2200
Engine Electrical						
Battery Capacity (5HR)		Voltage & Amp. hr.	12 - 48	12 - 48	12 - 60	12 - 60
Alternator Output		Watts	1200	1200	1200	1200
Starter Output		kW	1.6	1.6	2.0	2.0
Chassis						
Transaxle Type			U151E (AT)	U151E (AT)	E357 (MT)	E357 (MT)
Gear Ratio (Counter Gear Ratio Included*6)	1st		4.235	4.235	3.538	3.538
	2nd		2.360	2.360	1.913	1.913
	3rd		1.517	1.517	1.258	1.258
	4th		1.047	1.047	0.918	0.918
	5th		0.756	0.756	0.690	0.690
	6th		—	—	—	—
	Reverse		3.378	3.378	3.583	3.583
Differential (Final) Gear Ratio			3.478	3.478	3.684	3.684
Brake Type	Front		Ventilated Disc	Ventilated Disc	Ventilated Disc	Ventilated Disc
	Rear		Solid Disc	Solid Disc	Solid Disc	Solid Disc
Suspension Type	Front		MacPherson Strut	MacPherson Strut	MacPherson Strut	MacPherson Strut
	Rear		Double Wishbone	Double Wishbone	Double Wishbone	Double Wishbone
Stabilizer Bar		Front/Rear	Standard/Standard	Standard/Standard	Standard/Standard	Standard/Standard
Steering Gear Type			Rack and Pinion	Rack and Pinion	Rack and Pinion	Rack and Pinion
Steering Gear Ratio			16.1, 15.9*4	16.1, 15.9*4	16.1, 15.9*4	16.1
Power Steering Type			Integral Type	Integral Type	Integral Type	Integral Type

*1: 205/55R 16 tires, 215/45R 17 tires
*2: 195/65R 15 tires
*3: With Sliding Roof
*4: Rough Road Package
*5: Option
*6: Only for AT

EUROPE					
5-Door Liftback					
CDT250R-ALMEYW	CDT250L-ALMEYW	CDT250L-ALMGYW	ADT251R-ALFNYW	ADT251R-ALFEYW	ADT251L-ALFEYW
4630 (182.3)	4630 (182.3)	4630 (182.3)	4630 (182.3)	4630 (182.3)	4630 (182.3)
1760 (69.3)	1760 (69.3)	1760 (69.3)	1760 (69.3)	1760 (69.3)	1760 (69.3)
1480 (58.3)	1480 (58.3)	1480 (58.3)	1480 (58.3)	1480 (58.3)	1480 (58.3)
2700 (106.3)	2700 (106.3)	2700 (106.3)	2700 (106.3)	2700 (106.3)	2700 (106.3)
1505 (59.3)*1, 1520 (59.8)*2	1505 (59.3)*1, 1520 (59.8)*2	1505 (59.3)*1, 1520 (59.8)*2	1505 (59.3)	1505 (59.3)	1505 (59.3)
1500 (59.1)*1, 1520 (59.8)*2	1500 (59.1)*1, 1520 (59.8)*2	1500 (59.1)*1, 1520 (59.8)*2	1510 (59.4)	1510 (59.4)	1510 (59.4)
2090 (82.3)	2090 (82.3)	2090 (82.3)	2090 (82.3)	2090 (82.3)	2090 (82.3)
1485 (58.5)	1485 (58.5)	1485 (58.5)	1485 (58.5)	1485 (58.5)	1485 (58.5)
1210 (47.6), 1160 (45.7)*3	1210 (47.6), 1160 (45.7)*3	1210 (47.6), 1160 (45.7)*3	1210 (47.6), 1160 (45.7)*3	1210 (47.6), 1160 (45.7)*3	1210 (47.6), 1160 (45.7)*3
910 (35.8)	910 (35.8)	910 (35.8)	910 (35.8)	910 (35.8)	910 (35.8)
1025 (40.4)	1025 (40.4)	1025 (40.4)	1025 (40.4)	1025 (40.4)	1025 (40.4)
135 (5.3), 155 (6.1)*4	135 (5.3)	135 (5.3)	135 (5.3), 155 (6.1)*4	135 (5.3), 155 (6.1)*4	135 (5.3)
13.1, 14.5*4/18.7, 20.1*4	13.1/18.7	13.1/18.7	13.1, 14.5*4/18.7, 20.1*4	13.1, 14.5*4/18.7, 20.1*4	13.1/18.7
845 to 895 (1863 to 1973)	845 to 895 (1863 to 1973)	845 to 895 (1863 to 1973)	895 to 930 (1973 to 2050)	895 to 930 (1973 to 2050)	895 to 930 (1973 to 2050)
555 to 570 (1224 to 1257)	555 to 570 (1224 to 1257)	555 to 570 (1224 to 1257)	560 to 570 (1235 to 1257)	560 to 575 (1235 to 1268)	560 to 575 (1235 to 1268)
1400 to 1465 (3087 to 3230)	1400 to 1465 (3087 to 3230)	1400 to 1465 (3087 to 3230)	1455 to 1500 (3208 to 3307)	1455 to 1505 (3208 to 3318)	1455 to 1505 (3208 to 3318)
985 (2172)	985 (2172)	985 (2172)	1025 (2260)	1025 (2260)	1025 (2260)
985 (2172)	985 (2172)	985 (2172)	945 (2083)	945 (2083)	945 (2083)
1970 (4344)	1970 (4344)	1970 (4344)	1970 (4344)	1970 (4344)	1970 (4344)
0.510 (18.0)	0.510 (18.0)	0.510 (18.0)	0.510 (18.0)	0.510 (18.0)	0.510 (18.0)
60 (13.2)	60 (13.2)	60 (13.2)	60 (13.2)	60 (13.2)	60 (13.2)
195 (121)	195 (121)	195 (121)	210 (131)	210 (131)	210 (131)
—	—	—	—	—	—
11.2	11.2	11.2	9.3	9.3	9.3
17.7	17.7	17.7	16.7	16.7	16.7
45 (27)	45 (27)	45 (27)	44 (27)	44 (27)	44 (27)
84 (52)	84 (52)	84 (52)	82 (50)	82 (50)	82 (50)
128 (79)	128 (79)	128 (79)	129 (80)	129 (80)	129 (80)
176 (109)	176 (109)	176 (109)	183 (114)	183 (114)	183 (114)
5.6 (18.4)	5.6 (18.4)	5.6 (18.4)	5.6 (18.4)	5.6 (18.4)	5.6 (18.4)
5.995 (19.7)	5.995 (19.7)	5.995 (19.7)	5.995 (19.7)	5.995 (19.7)	5.995 (19.7)
1CD-FTV	1CD-FTV	1CD-FTV	2AD-FTV	2AD-FTV	2AD-FTV
4-cylinder, In-line	4-cylinder, In-line	4-cylinder, In-line	4-cylinder, In-line	4-cylinder, In-line	4-cylinder, In-line
16-Valve, DOHC	16-Valve, DOHC	16-Valve, DOHC	16-Valve, DOHC	16-Valve, DOHC	16-Valve, DOHC
82.2×94.0 (3.24×3.70)	82.2×94.0 (3.24×3.70)	82.2×94.0 (3.24×3.70)	86.0×96.0 (3.39×3.78)	86.0×96.0 (3.39×3.78)	86.0×96.0 (3.39×3.78)
1995 (121.7)	1995 (121.7)	1995 (121.7)	2231 (136.1)	2231 (136.1)	2231 (136.1)
17.8	17.8	17.8	16.8 : 1	16.8 : 1	16.8 : 1
Common-Rail Type	Common-Rail Type	Common-Rail Type	Common-Rail Type	Common-Rail Type	Common-Rail Type
48 or higher	48 or higher	48 or higher	48 or higher	48 or higher	48 or higher
85/3600	85/3600	85/3600	110/3600	110/3600	110/3600
280/2000-2200	280/2000-2200	280/2000-2200	310/2000-3200	310/2000-3200	310/2000-3200
12 - 60	12 - 60	12 - 60	12 - 67	12 - 67	12 - 67
1200	1200	1200	1200	1200	1200
2.0	2.0	2.0	2.0	2.0	2.0
E357 (MT)	E357 (MT)	E357 (MT)	EA61 (MT)	EA61 (MT)	EA61 (MT)
3.538	3.538	3.538	3.538	3.538	3.538
1.913	1.913	1.913	1.913	1.913	1.913
1.258	1.258	1.258	1.218	1.218	1.218
0.918	0.918	0.918	0.860	0.860	0.860
0.690	0.690	0.690	0.790	0.790	0.790
—	—	—	0.673	0.673	0.673
3.583	3.583	3.583	3.831	3.831	3.831
3.684	3.684	3.684	3.777*7/3.238*8	3.777*7/3.238*8	3.777*7/3.238*8
Ventilated Disc	Ventilated Disc	Ventilated Disc	Ventilated Disc	Ventilated Disc	Ventilated Disc
Solid Disc	Solid Disc	Solid Disc	Solid Disc	Solid Disc	Solid Disc
MacPherson Strut	MacPherson Strut	MacPherson Strut	MacPherson Strut	MacPherson Strut	MacPherson Strut
Double Wishbone	Double Wishbone	Double Wishbone	Double Wishbone	Double Wishbone	Double Wishbone
Standard/Standard	Standard/Standard	Standard/Standard	Standard/Standard	Standard/Standard	Standard/Standard
Rack and Pinion	Rack and Pinion	Rack and Pinion	Rack and Pinion	Rack and Pinion	Rack and Pinion
16.1, 15.9*4	16.1	16.1	16.1, 15.9*4	16.1, 15.9*4	16.1
Integral Type	Integral Type	Integral Type	Integral Type	Integral Type	Integral Type

Area			EUROPE			
Body Type			5-Door Liftback			
Model Code			ADT251R-ALFGYW	ADT251L-ALFGYW	ADT251R-ALFEXW	ADT251L-ALFEXW
Major Dimensions & Vehicle Weights						
Overall	Length	mm (in.)	4630 (182.3)	4630 (182.3)	4630 (182.3)	4630 (182.3)
	Width	mm (in.)	1760 (69.3)	1760 (69.3)	1760 (69.3)	1760 (69.3)
	Height	mm (in.)	1480 (58.3)	1480 (58.3)	1480 (58.3)	1480 (58.3)
Wheel Base		mm (in.)	2700 (106.3)	2700 (106.3)	2700 (106.3)	2700 (106.3)
Tread	Front	mm (in.)	1505 (59.3)	1505 (59.3)	1505 (59.3)	1505 (59.3)
	Rear	mm (in.)	1510 (59.4)	1510 (59.4)	1510 (59.4)	1510 (59.4)
Room	Length	mm (in.)	2090 (82.3)	2090 (82.3)	2090 (82.3)	2090 (82.3)
	Width	mm (in.)	1485 (58.5)	1485 (58.5)	1485 (58.5)	1485 (58.5)
	Height	mm (in.)	1210 (47.6), 1160 (45.7)*3	1210 (47.6), 1160 (45.7)*3	1210 (47.6), 1160 (45.7)*3	1210 (47.6), 1160 (45.7)*3
Overhang	Front	mm (in.)	910 (35.8)	910 (35.8)	910 (35.8)	910 (35.8)
	Rear	mm (in.)	1025 (40.4)	1025 (40.4)	1025 (40.4)	1025 (40.4)
Min. Running Ground Clearance		mm (in.)	135 (5.3), 155 (6.1)*4	135 (5.3)	135 (5.3), 155 (6.1)*4	135 (5.3)
Angle of Approach/Departure		degrees	13.1, 14.5*4/18.7, 20.1*4	13.1/18.7	13.1, 14.5*4/18.7, 20.1*4	13.1/18.7
Curb Weight	Front	kg (lb)	895 to 930 (1973 to 2050)	895 to 930 (1973 to 2050)	900 to 935 (1984 to 2061)	900 to 935 (1984 to 2061)
	Rear	kg (lb)	560 to 575 (1235 to 1268)	560 to 575 (1235 to 1268)	560 to 575 (1235 to 1268)	560 to 575 (1235 to 1268)
	Total	kg (lb)	1455 to 1505 (3208 to 3318)	1455 to 1505 (3208 to 3318)	1460 to 1510 (3219 to 3329)	1460 to 1510 (3219 to 3329)
Gross Vehicle Weight	Front	kg (lb)	1025 (2260)	1025 (2260)	1025 (2260)	1025 (2260)
	Rear	kg (lb)	945 (2083)	945 (2083)	945 (2083)	945 (2083)
	Total	kg (lb)	1970 (4344)	1970 (4344)	1970 (4344)	1970 (4344)
Luggage Compartment Capacity		m^3 (cu.ft.)	0.510 (18.0)	0.510 (18.0)	0.510 (18.0)	0.510 (18.0)
Fuel Tank Capacity		L (Us.gal, Imp.gal)	60 (13.2)	60 (13.2)	60 (13.2)	60 (13.2)
Performance						
Max. Speed		km/h (mph)	210 (131)	210 (131)	220 (138)	220 (138)
Max. Cruising Speed		km/h (mph)	—	—	—	—
Acceleration	0 to 100 km/h	sec.	9.3	9.3	8.6	8.6
	0 to 400 m	sec.	16.7	16.7	16.3	16.3
Max. Permissible Speed	1st Gear	km/h (mph)	44 (27)	44 (27)	44 (27)	44 (27)
	2nd Gear	km/h (mph)	82 (50)	82 (50)	82 (50)	82 (50)
	3rd Gear	km/h (mph)	129 (80)	129 (80)	129 (80)	129 (80)
	4th Gear	km/h (mph)	183 (114)	183 (114)	183 (114)	183 (114)
Min. Turning Radius	Tire	m (ft.)	5.6 (18.4)	5.6 (18.4)	5.6 (18.4)	5.6 (18.4)
	Body	m (ft.)	5.995 (19.7)	5.995 (19.7)	5.995 (19.7)	5.995 (19.7)
Engine						
Engine Type			2AD-FTV	2AD-FTV	2AD-FHV	2AD-FHV
No. of Cyls. & Arrangement			4-cylinder, In-line	4-cylinder, In-line	4-cylinder, In-line	4-cylinder, In-line
Valve Mechanism			16-Valve, DOHC	16-Valve, DOHC	16-Valve, DOHC	16-Valve, DOHC
Bore × Stroke		mm (in.)	86.0×96.0 (3.39×3.78)	86.0×96.0 (3.39×3.78)	86.0×96.0 (3.39×3.78)	86.0×96.0 (3.39×3.78)
Displacement		cm^3 (cu.in.)	2231 (136.1)	2231 (136.1)	2231 (136.1)	2231 (136.1)
Compression Ratio			16.8 : 1	16.8 : 1	15.8 : 1	15.8 : 1
Fuel System			Common-Rail Type	Common-Rail Type	Common-Rail Type	Common-Rail Type
Reserch Octane No. or Cetane No.			48 or higher	48 or higher	48 or higher	48 or higher
Max. Output (EEC)		kW/rpm	110/3600	110/3600	130/3600	130/3600
Max. Torque (EEC)		Nm/rpm	310/2000-3200	310/2000-3200	400/2000-2600	400/2000-2600
Engine Electrical						
Battery Capacity (5HR)		Voltage & Amp. hr.	12 - 67	12 - 67	12 - 67	12 - 67
Alternator Output		Watts	1200	1200	1200	1200
Starter Output		kW	2.0	2.0	2.0	2.0
Chassis						
Transaxle Type			EA61 (MT)	EA61 (MT)	EA60 (MT)	EA60 (MT)
Gear Ratio (Counter Gear Ratio Included*6)	1st		3.538	3.538	3.538	3.538
	2nd		1.913	1.913	1.913	1.913
	3rd		1.218	1.218	1.218	1.218
	4th		0.860	0.860	0.860	0.860
	5th		0.790	0.790	0.790	0.790
	6th		0.673	0.673	0.638	0.638
	Reverse		3.831	3.831	3.831	3.831
Differential (Final) Gear Ratio			3.777*7/3.238*8	3.777*7/3.238*8	3.777*7/3.238*8	3.777*7/3.238*8
Brake Type	Front		Ventilated Disc	Ventilated Disc	Ventilated Disc	Ventilated Disc
	Rear		Solid Disc	Solid Disc	Solid Disc	Solid Disc
Suspension Type	Front		MacPherson Strut	MacPherson Strut	MacPherson Strut	MacPherson Strut
	Rear		Double Wishbone	Double Wishbone	Double Wishbone	Double Wishbone
Stabilizer Bar		Front/Rear	Standard/Standard	Standard/Standard	Standard/Standard	Standard/Standard
Steering Gear Type			Rack and Pinion	Rack and Pinion	Rack and Pinion	Rack and Pinion
Steering Gear Ratio			16.1, 15.9*4	16.1	16.1, 15.9*4	16.1
Power Steering Type			Integral Type	Integral Type	Integral Type	Integral Type

*1: 205/55R 16 tires, 215/45R 17 tires
*2: 195/65R 15 tires
*3: With Sliding Roof
*4: Rough Road Package
*5: Option
*6: Only for AT

EUROPE					
5-Door Liftback		5-Door Wagon			
ADT251R-ALFGXW	ADT251L-ALFGXW	ZZT250L-AWMNKW	ZZT251R-AWMNKW	ZZT251L-AWMNKW	ZZT251R-AWMEKW
4630 (182.3)	4630 (182.3)	4700 (185.0)	4700 (185.0)	4700 (185.0)	4700 (185.0)
1760 (69.3)	1760 (69.3)	1760 (69.3)	1760 (69.3)	1760 (69.3)	1760 (69.3)
1480 (58.3)	1480 (58.3)	1525 (60.0)	1525 (60.0)	1525 (60.0)	1525 (60.0)
2700 (106.3)	2700 (106.3)	2700 (106.3)	2700 (106.3)	2700 (106.3)	2700 (106.3)
1505 (59.3)	1505 (59.3)	1505 (59.3)*1, 1520 (59.8)*2	1505 (59.3)*1, 1520 (59.8)*2	1505 (59.3)*1, 1520 (59.8)*2	1505 (59.3)*1, 1520 (59.8)*2
1510 (59.4)	1510 (59.4)	1500 (59.1)*1, 1520 (59.8)*2	1500 (59.1)*1, 1520 (59.8)*2	1500 (59.1)*1, 1520 (59.8)*2	1500 (59.1)*1, 1520 (59.8)*2
2090 (82.3)	2090 (82.3)	2090 (82.3)	2090 (82.3)	2090 (82.3)	2090 (82.3)
1485 (58.5)	1485 (58.5)	1485 (58.5)	1485 (58.5)	1485 (58.5)	1485 (58.5)
1210 (47.6), 1160 (45.7)*3	1210 (47.6), 1160 (45.7)*3	1210 (47.6), 1160 (45.7)*3	1210 (47.6), 1160 (45.7)*3	1210 (47.6), 1160 (45.7)*3	1210 (47.6), 1160 (45.7)*3
910 (35.8)	910 (35.8)	910 (35.8)	910 (35.8)	910 (35.8)	910 (35.8)
1025 (40.4)	1025 (40.4)	1095 (43.1)	1095 (43.1)	1095 (43.1)	1095 (43.1)
135 (5.3), 155 (6.1)*4	135 (5.3)	135 (5.3), 155 (6.1)*4	135 (5.3), 155 (6.1)*4	135 (5.3), 155 (6.1)*4	135 (5.3), 155 (6.1)*4
13.1, 14.5*4/18.7, 20.1*4	13.1/18.7	13.1, 14.5*4/18.0, 19.2*4	13.1, 14.5*4/18.0, 19.2*4	13.1, 14.5*4/18.0, 19.2*4	13.1, 14.5*4/18.0, 19.2*4
900 to 935 (1984 to 2061)	900 to 935 (1984 to 2061)	715 to 750 (1576 to 1653)	715 to 750 (1576 to 1653)	715 to 750 (1576 to 1653)	715 to 750 (1576 to 1653)
560 to 575 (1235 to 1268)	560 to 575 (1235 to 1268)	580 to 590 (1279 to 1301)	580 to 595 (1279 to 1312)	580 to 595 (1279 to 1312)	580 to 595 (1279 to 1312)
1460 to 1510 (3219 to 3329)	1460 to 1510 (3219 to 3329)	1295 to 1340 (2855 to 2954)	1295 to 1345 (2855 to 2965)	1295 to 1345 (2855 to 2965)	1295 to 1345 (2855 to 2965)
1025 (2260)	1025 (2260)	840 (1852)	840 (1852)	840 (1852)	840 (1852)
945 (2083)	945 (2083)	980 (2161)	980 (2161)	980 (2161)	980 (2161)
1970 (4344)	1970 (4344)	1820 (4013)	1820 (4013)	1820 (4013)	1820 (4013)
0.510 (18.0)	0.510 (18.0)	0.520 (18.4)	0.520 (18.4)	0.520 (18.4)	0.520 (18.4)
60 (13.2)	60 (13.2)	60 (13.2)	60 (13.2)	60 (13.2)	60 (13.2)
220 (138)	220 (138)	195 (121)	200 (124)	200 (124)	200 (124)
—	—	—	—	—	—
8.6	8.6	12.2	10.5	10.5	10.5
16.3	16.3	18.2	17.2	17.2	17.2
44 (27)	44 (27)	47 (29)	51 (31)	51 (31)	51 (31)
82 (50)	82 (50)	87 (54)	95 (59)	95 (59)	95 (59)
129 (80)	129 (80)	127 (78)	139 (86)	139 (86)	139 (86)
183 (114)	183 (114)	172 (106)	176 (109)	176 (109)	176 (109)
5.6 (18.4)	5.6 (18.4)	5.4 (17.7)	5.4 (17.7)	5.4 (17.7)	5.4 (17.7)
5.995 (19.7)	5.995 (19.7)	5.75 (18.9)	5.75 (18.9)	5.75 (18.9)	5.75 (18.9)
2AD-FHV	2AD-FHV	3ZZ-FE	1ZZ-FE	1ZZ-FE	1ZZ-FE
4-cylinder, In-line	4-cylinder, In-line	4-cylinder, In-line	4-cylinder, In-line	4-cylinder, In-line	4-cylinder, In-line
16-Valve, DOHC	16-Valve, DOHC	16-valve, DOHC with VVT-i	16-valve, DOHC with VVT-i	16-valve, DOHC with VVT-i	16-valve, DOHC with VVT-i
86.0×96.0 (3.39×3.78)	86.0×96.0 (3.39×3.78)	79.0×81.5 (3.11×3.21)	79.0×91.5 (3.11×3.60)	79.0×91.5 (3.11×3.60)	79.0×91.5 (3.11×3.60)
2231 (136.1)	2231 (136.1)	1598 (97.5)	1794 (109.5)	1794 (109.5)	1794 (109.5)
15.8 : 1	15.8 : 1	10.5	10.0	10.0	10.0
Common-Rail Type	Common-Rail Type	EFI	EFI	EFI	EFI
48 or higher	48 or higher	95 or higher	95 or higher	95 or higher	95 or higher
130/3600	130/3600	81/6000	95/6000	95/6000	95/6000
400/2000-2600	400/2000-2600	150/3800	170/4200	170/4200	170/4200
12 - 67	12 - 67	12 -32, 48*5	12 -32, 48*5	12 -32, 48*5	12 -32, 48*5
1200	1200	1080	1080	1080	1080
2.0	2.0	1.3	1.3	1.3	1.3
EA60 (MT)	EA60 (MT)	C50 (MT)	C250 (MT)	C250 (MT)	C250 (MT)
3.538	3.538	3.545	3.545	3.545	3.545
1.913	1.913	1.904	1.904	1.904	1.904
1.218	1.218	1.310	1.310	1.310	1.310
0.860	0.860	0.969	1.031	1.031	1.031
0.790	0.790	0.815	0.815	0.815	0.815
0.638	0.638	—	—	—	—
3.831	3.831	3.250	3.250	3.250	3.250
3.777*7/3.238*8	3.777*7/3.238*8	4.312	3.941	3.941	3.941
Ventilated Disc	Ventilated Disc	Ventilated Disc	Ventilated Disc	Ventilated Disc	Ventilated Disc
Solid Disc	Solid Disc	Solid Disc	Solid Disc	Solid Disc	Solid Disc
MacPherson Strut	MacPherson Strut	MacPherson Strut	MacPherson Strut	MacPherson Strut	MacPherson Strut
Double Wishbone	Double Wishbone	Double Wishbone	Double Wishbone	Double Wishbone	Double Wishbone
Standard/Standard	Standard/Standard	Standard/Standard	Standard/Standard	Standard/Standard	Standard/Standard
Rack and Pinion	Rack and Pinion	Rack and Pinion	Rack and Pinion	Rack and Pinion	Rack and Pinion
16.1, 15.9*4	16.1	17.5, 17.3*4	17.5, 17.3*4	17.5, 17.3*4	17.5, 17.3*4
Integral Type	Integral Type	EPS	EPS	EPS	EPS

AP

Area			EUROPE			
Body Type			5-Door Wagon			
Model Code			ZZT251L-AWMEKW	ZZT251L-AWPEKW	ZZT251L-AWMGKW	ZZT251L-AWPGKW
Major Dimensions & Vehicle Weights						
Overall	Length	mm (in.)	4700 (185.0)	4700 (185.0)	4700 (185.0)	4700 (185.0)
	Width	mm (in.)	1760 (69.3)	1760 (69.3)	1760 (69.3)	1760 (69.3)
	Height	mm (in.)	1525 (60.0)	1525 (60.0)	1525 (60.0)	1525 (60.0)
Wheel Base		mm (in.)	2700 (106.3)	2700 (106.3)	2700 (106.3)	2700 (106.3)
Tread	Front	mm (in.)	1505 (59.3)*1, 1520 (59.8)*2	1505 (59.3)*1, 1520 (59.8)*2	1505 (59.3)*1, 1520 (59.8)*2	1505 (59.3)*1, 1520 (59.8)*2
	Rear	mm (in.)	1500 (59.1)*1, 1520 (59.8)*2	1500 (59.1)*1, 1520 (59.8)*2	1500 (59.1)*1, 1520 (59.8)*2	1500 (59.1)*1, 1520 (59.8)*2
Room	Length	mm (in.)	2090 (82.3)	2090 (82.3)	2090 (82.3)	2090 (82.3)
	Width	mm (in.)	1485 (58.5)	1485 (58.5)	1485 (58.5)	1485 (58.5)
	Height	mm (in.)	1210 (47.6), 1160 (45.7)*3	1210 (47.6), 1160 (45.7)*3	1210 (47.6), 1160 (45.7)*3	1210 (47.6), 1160 (45.7)*3
Overhang	Front	mm (in.)	910 (35.8)	910 (35.8)	910 (35.8)	910 (35.8)
	Rear	mm (in.)	1095 (43.1)	1095 (43.1)	1095 (43.1)	1095 (43.1)
Min. Running Ground Clearance		mm (in.)	135 (5.3), 155 (6.1)*4	135 (5.3), 155 (6.1)*4	135 (5.3), 155 (6.1)*4	135 (5.3), 155 (6.1)*4
Angle of Approach/Departure		degrees	13.1, 14.5*4/18.0, 19.2*4	13.1, 14.5*4/18.0, 19.2*4	13.1, 14.5*4/18.0, 19.2*4	13.1, 14.5*4/18.0, 19.2*4
Curb Weight	Front	kg (lb)	715 to 750 (1576 to 1653)	745 to 775 (1642 to 1709)	715 to 750 (1576 to 1653)	745 to 775 (1642 to 1709)
	Rear	kg (lb)	580 to 595 (1279 to 1312)	580 to 600 (1279 to 1323)	580 to 595 (1279 to 1312)	580 to 600 (1279 to 1323)
	Total	kg (lb)	1295 to 1345 (2855 to 2965)	1325 to 1375 (2921 to 3032)	1295 to 1345 (2855 to 2965)	1325 to 1375 (2921 to 3032)
Gross Vehicle Weight	Front	kg (lb)	840 (1852)	840 (1852)	840 (1852)	840 (1852)
	Rear	kg (lb)	980 (2161)	980 (2161)	980 (2161)	980 (2161)
	Total	kg (lb)	1820 (4013)	1820 (4013)	1820 (4013)	1820 (4013)
Luggage Compartment Capacity		m^3 (cu.ft.)	0.520 (18.4)	0.520 (18.4)	0.520 (18.4)	0.520 (18.4)
Fuel Tank Capacity		L (Us.gal, Imp.gal)	60 (13.2)	60 (13.2)	60 (13.2)	60 (13.2)
Performance						
Max. Speed		km/h (mph)	200 (124)	195 (121)	200 (124)	195 (121)
Max. Cruising Speed		km/h (mph)	—	—	—	—
Acceleration	0 to 100 km/h	sec.	10.5	11.8	10.5	11.8
	0 to 400 m	sec.	17.2	18.0	17.2	18.0
Max. Permissible Speed	1st Gear	km/h (mph)	51 (31)	59 (36)	51 (31)	59 (36)
	2nd Gear	km/h (mph)	95 (59)	109 (67)	95 (59)	109 (67)
	3rd Gear	km/h (mph)	139 (86)	169 (105)	139 (86)	169 (105)
	4th Gear	km/h (mph)	176 (109)	—	176 (109)	—
Min. Turning Radius	Tire	m (ft.)	5.4 (17.7)	5.4 (17.7)	5.4 (17.7)	5.4 (17.7)
	Body	m (ft.)	5.75 (18.9)	5.75 (18.9)	5.75 (18.9)	5.75 (18.9)
Engine						
Engine Type			1ZZ-FE	1ZZ-FE	1ZZ-FE	1ZZ-FE
No. of Cyls. & Arrangement			4-cylinder, In-line	4-cylinder, In-line	4-cylinder, In-line	4-cylinder, In-line
Valve Mechanism			16-valve, DOHC with VVT-i	16-valve, DOHC with VVT-i	16-valve, DOHC with VVT-i	16-valve, DOHC with VVT-i
Bore × Stroke		mm (in.)	79.0×91.5 (3.11×3.60)	79.0×91.5 (3.11×3.60)	79.0×91.5 (3.11×3.60)	79.0×91.5 (3.11×3.60)
Displacement		cm^3 (cu.in.)	1794 (109.5)	1794 (109.5)	1794 (109.5)	1794 (109.5)
Compression Ratio			10.0	10.0	10.0	10.0
Fuel System			EFI	EFI	EFI	EFI
Reserch Octane No. or Cetane No.			95 or higher	95 or higher	95 or higher	95 or higher
Max. Output (EEC)		kW/rpm	95/6000	95/6000	95/6000	95/6000
Max. Torque (EEC)		Nm/rpm	170/4200	170/4200	170/4200	170/4200
Engine Electrical						
Battery Capacity (5HR)		Voltage & Amp. hr.	12 -32, 48*5	12 -32, 48*5	12 -32, 48*5	12 -32, 48*5
Alternator Output		Watts	1080	1080	1080	1080
Starter Output		kW	1.3	1.3	1.3	1.3
Chassis						
Transaxle Type			C250 (MT)	U341E (AT)	C250 (MT)	U341E (AT)
Gear Ratio (Counter Gear Ratio Included*6)	1st		3.545	2.847	3.545	2.847
	2nd		1.904	1.552	1.904	1.552
	3rd		1.310	1.000	1.310	1.000
	4th		1.031	0.700	1.031	0.700
	5th		0.815	—	0.815	—
	6th		—	—	—	—
	Reverse		3.250	2.343	3.250	2.343
Differential (Final) Gear Ratio			3.941	4.237	3.941	4.237
Brake Type	Front		Ventilated Disc	Ventilated Disc	Ventilated Disc	Ventilated Disc
	Rear		Solid Disc	Solid Disc	Solid Disc	Solid Disc
Suspension Type	Front		MacPherson Strut	MacPherson Strut	MacPherson Strut	MacPherson Strut
	Rear		Double Wishbone	Double Wishbone	Double Wishbone	Double Wishbone
Stabilizer Bar		Front/Rear	Standard/Standard	Standard/Standard	Standard/Standard	Standard/Standard
Steering Gear Type			Rack and Pinion	Rack and Pinion	Rack and Pinion	Rack and Pinion
Steering Gear Ratio			17.5, 17.3*4	17.5, 17.3*4	17.5, 17.3*4	17.5, 17.3*4
Power Steering Type			EPS	EPS	EPS	EPS

*1: 205/55R 16 tires, 215/45R 17 tires
*2: 195/65R 15 tires
*3: With Sliding Roof
*4: Rough Road Package
*5: Option
*6: Only for AT

EUROPE					
5-Door Wagon					
AZT250R-AWMEHW	AZT250L-AWMEHW	AZT250R-AWPEHW	AZT250L-AWPEHW	AZT250L-AWMGHW	AZT250L-AWPGHW
4700 (185.0)	4700 (185.0)	4700 (185.0)	4700 (185.0)	4700 (185.0)	4700 (185.0)
1760 (69.3)	1760 (69.3)	1760 (69.3)	1760 (69.3)	1760 (69.3)	1760 (69.3)
1525 (60.0)	1525 (60.0)	1525 (60.0)	1525 (60.0)	1525 (60.0)	1525 (60.0)
2700 (106.3)	2700 (106.3)	2700 (106.3)	2700 (106.3)	2700 (106.3)	2700 (106.3)
1505 (59.3)*1, 1520 (59.8)*2	1505 (59.3)*1, 1520 (59.8)*2	1505 (59.3)*1, 1520 (59.8)*2	1505 (59.3)*1, 1520 (59.8)*2	1505 (59.3)*1, 1520 (59.8)*2	1505 (59.3)*1, 1520 (59.8)*2
1500 (59.1)*1, 1520 (59.8)*2	1500 (59.1)*1, 1520 (59.8)*2	1500 (59.1)*1, 1520 (59.8)*2	1500 (59.1)*1, 1520 (59.8)*2	1500 (59.1)*1, 1520 (59.8)*2	1500 (59.1)*1, 1520 (59.8)*2
2090 (82.3)	2090 (82.3)	2090 (82.3)	2090 (82.3)	2090 (82.3)	2090 (82.3)
1485 (58.5)	1485 (58.5)	1485 (58.5)	1485 (58.5)	1485 (58.5)	1485 (58.5)
1210 (47.6), 1160 (45.7)*3	1210 (47.6), 1160 (45.7)*3	1210 (47.6), 1160 (45.7)*3	1210 (47.6), 1160 (45.7)*3	1210 (47.6), 1160 (45.7)*3	1210 (47.6), 1160 (45.7)*3
910 (35.8)	910 (35.8)	910 (35.8)	910 (35.8)	910 (35.8)	910 (35.8)
1095 (43.1)	1095 (43.1)	1095 (43.1)	1095 (43.1)	1095 (43.1)	1095 (43.1)
135 (5.3), 155 (6.1)*4	135 (5.3), 155 (6.1)*4	135 (5.3), 155 (6.1)*4	135 (5.3), 155 (6.1)*4	135 (5.3), 155 (6.1)*4	135 (5.3), 155 (6.1)*4
13.1, 14.5*4/18.0, 19.2*4	13.1, 14.5*4/18.0, 19.2*4	13.1, 14.5*4/18.0, 19.2*4	13.1, 14.5*4/18.0, 19.2*4	13.1, 14.5*4/18.0, 19.2*4	13.1, 14.5*4/18.0, 19.2*4
770 to 800 (1698 to 1764)	770 to 800 (1698 to 1764)	800 to 825 (1764 to 1819)	800 to 825 (1764 to 1819)	770 to 800 (1698 to 1764)	800 to 825 (1764 to 1819)
585 to 600 (1290 to 1323)	585 to 600 (1290 to 1323)	585 to 595 (1290 to 1312)	585 to 595 (1290 to 1312)	585 to 600 (1290 to 1323)	585 to 595 (1290 to 1312)
1355 to 1400 (2988 to 3087)	1355 to 1400 (2988 to 3087)	1385 to 1420 (3054 to 3131)	1385 to 1420 (3054 to 3131)	1355 to 1400 (2988 to 3087)	1385 to 1420 (3054 to 3131)
915 (2017)	915 (2017)	915 (2017)	915 (2017)	915 (2017)	915 (2017)
980 (2161)	980 (2161)	980 (2161)	980 (2161)	980 (2161)	980 (2161)
1895 (4178)	1895 (4178)	1895 (4178)	1895 (4178)	1895 (4178)	1895 (4178)
0.520 (18.4)	0.520 (18.4)	0.520 (18.4)	0.520 (18.4)	0.520 (18.4)	0.520 (18.4)
60 (13.2)	60 (13.2)	60 (13.2)	60 (13.2)	60 (13.2)	60 (13.2)
210 (131)	210 (131)	205 (127)	205 (127)	210 (131)	205 (127)
—	—	—	—	—	—
9.6	9.6	11.3	11.3	9.6	11.3
16.7	16.7	17.7	17.7	16.7	17.7
56 (34)	56 (34)	63 (39)	63 (39)	56 (34)	63 (39)
96 (59)	96 (59)	114 (71)	114 (71)	96 (59)	114 (71)
149 (92)	149 (92)	177 (110)	177 (110)	149 (92)	177 (110)
193 (119)	193 (119)	—	—	193 (119)	—
5.6 (18.4)	5.6 (18.4)	5.6 (18.4)	5.6 (18.4)	5.6 (18.4)	5.6 (18.4)
5.995 (19.7)	5.995 (19.7)	5.995 (19.7)	5.995 (19.7)	5.995 (19.7)	5.995 (19.7)
1AZ-FSE	1AZ-FSE	1AZ-FSE	1AZ-FSE	1AZ-FSE	1AZ-FSE
4-cylinder, In-line	4-cylinder, In-line	4-cylinder, In-line	4-cylinder, In-line	4-cylinder, In-line	4-cylinder, In-line
16-valve, DOHC with VVT-i	16-valve, DOHC with VVT-i	16-valve, DOHC with VVT-i	16-valve, DOHC with VVT-i	16-valve, DOHC with VVT-i	16-valve, DOHC with VVT-i
86.0×86.0 (3.39×3.39)	86.0×86.0 (3.39×3.39)	86.0×86.0 (3.39×3.39)	86.0×86.0 (3.39×3.39)	86.0×86.0 (3.39×3.39)	86.0×86.0 (3.39×3.39)
1998 (121.9)	1998 (121.9)	1998 (121.9)	1998 (121.9)	1998 (121.9)	1998 (121.9)
11.0	11.0	11.0	11.0	11.0	11.0
EFI	EFI	EFI	EFI	EFI	EFI
95 or higher	95 or higher	95 or higher	95 or higher	95 or higher	95 or higher
108/5700	108/5700	108/5700	108/5700	108/5700	108/5700
196/4000	196/4000	196/4000	196/4000	196/4000	196/4000
12 -32, 48*5	12 -32, 48*5	12 - 48	12 - 48	12 -32, 48*5	12 - 48
1200	1200	1200	1200	1200	1200
1.3, 1.6*5	1.3, 1.6*5	1.6	1.6	1.3, 1.6*5	1.6
E354 (MT)	E354 (MT)	U241E (AT)	U241E (AT)	E354 (MT)	U241E (AT)
3.538	3.538	3.943	3.943	3.538	3.943
2.054	2.054	2.197	2.197	2.054	2.197
1.333	1.333	1.413	1.413	1.333	1.413
1.028	1.028	1.020	1.020	1.028	1.020
0.820	0.820	—	—	0.820	—
—	—	—	—	—	—
3.583	3.583	3.145	3.145	3.583	3.145
3.684	3.684	2.923	2.923	3.684	2.923
Ventilated Disc	Ventilated Disc	Ventilated Disc	Ventilated Disc	Ventilated Disc	Ventilated Disc
Solid Disc	Solid Disc	Solid Disc	Solid Disc	Solid Disc	Solid Disc
MacPherson Strut	MacPherson Strut	MacPherson Strut	MacPherson Strut	MacPherson Strut	MacPherson Strut
Double Wishbone	Double Wishbone	Double Wishbone	Double Wishbone	Double Wishbone	Double Wishbone
Standard/Standard	Standard/Standard	Standard/Standard	Standard/Standard	Standard/Standard	Standard/Standard
Rack and Pinion	Rack and Pinion	Rack and Pinion	Rack and Pinion	Rack and Pinion	Rack and Pinion
16.1, 15.9*4	16.1, 15.9*4	16.1, 15.9*4	16.1, 15.9*4	16.1, 15.9*4	16.1, 15.9*4
Integral Type	Integral Type	Integral Type	Integral Type	Integral Type	Integral Type

Area			EUROPE			
Body Type			5-Door Wagon			
Model Code			AZT251L-AWAEHW	AZT251L-AWAGHW	CDT250R-AWMNYW	CDT250L-AWMNYW
Major Dimensions & Vehicle Weights						
Overall	Length	mm (in.)	4700 (185.0)	4700 (185.0)	4700 (185.0)	4700 (185.0)
	Width	mm (in.)	1760 (69.3)	1760 (69.3)	1760 (69.3)	1760 (69.3)
	Height	mm (in.)	1525 (60.0)	1525 (60.0)	1525 (60.0)	1525 (60.0)
Wheel Base		mm (in.)	2700 (106.3)	2700 (106.3)	2700 (106.3)	2700 (106.3)
Tread	Front	mm (in.)	1505 (59.3)*1, 1520 (59.8)*2	1505 (59.3)*1, 1520 (59.8)*2	1505 (59.3)*1, 1520 (59.8)*2	1505 (59.3)*1, 1520 (59.8)*2
	Rear	mm (in.)	1500 (59.1)*1, 1520 (59.8)*2	1500 (59.1)*1, 1520 (59.8)*2	1500 (59.1)*1, 1520 (59.8)*2	1500 (59.1)*1, 1520 (59.8)*2
Room	Length	mm (in.)	2090 (82.3)	2090 (82.3)	2090 (82.3)	2090 (82.3)
	Width	mm (in.)	1485 (58.5)	1485 (58.5)	1485 (58.5)	1485 (58.5)
	Height	mm (in.)	1210 (47.6), 1160 (45.7)*3	1210 (47.6), 1160 (45.7)*3	1210 (47.6), 1160 (45.7)*3	1210 (47.6), 1160 (45.7)*3
Overhang	Front	mm (in.)	910 (35.8)	910 (35.8)	910 (35.8)	910 (35.8)
	Rear	mm (in.)	1095 (43.1)	1095 (43.1)	1095 (43.1)	1095 (43.1)
Min. Running Ground Clearance		mm (in.)	135 (5.3), 155 (6.1)*4	135 (5.3), 155 (6.1)*4	135 (5.3), 155 (6.1)*4	135 (5.3)
Angle of Approach/Departure		degrees	13.1, 14.5*4/18.0, 19.2*4	13.1, 14.5*4/18.0, 19.2*4	13.1, 14.5*4/18.0, 19.2*4	13.1/18.0
Curb Weight	Front	kg (lb)	820 to 850 (1806 - 1872)	820 to 850 (1806 to 1872)	850 to 900 (1874 to 1984)	850 to 900 (1874 to 1984)
	Rear	kg (lb)	580 to 595 (1278 - 1311)	580 to 595 (1278 to 1311)	580 to 590 (1279 to 1301)	580 to 590 (1279 to 1301)
	Total	kg (lb)	1400 to 1445 (3084 - 3183)	1400 to 1445 (3084 to 3183)	1430 to 1490 (3153 to 3285)	1430 to 1490 (3153 to 3285)
Gross Vehicle Weight	Front	kg (lb)	935 (2059)	935 (2059)	985 (2172)	985 (2172)
	Rear	kg (lb)	970 (2157)	970 (2157)	985 (2172)	985 (2172)
	Total	kg (lb)	1905 (4196)	1905 (4196)	1970 (4344)	1970 (4344)
Luggage Compartment Capacity		m^3 (cu.ft.)	0.520 (18.4)	0.520 (18.4)	0.520 (18.4)	0.520 (18.4)
Fuel Tank Capacity		L (Us.gal, Imp.gal)	60 (13.2)	60 (13.2)	60 (13.2)	60 (13.2)
Performance						
Max. Speed		km/h (mph)	220 (138)	220 (138)	195 (121)	195 (121)
Max. Cruising Speed		km/h (mph)	—	—	—	—
Acceleration	0 to 100 km/h	sec.	9.5	9.5	11.4	11.4
	0 to 400 m	sec.	16.8	16.8	17.8	17.8
Max. Permissible Speed	1st Gear	km/h (mph)	45 (27)	45 (27)	45 (27)	45 (27)
	2nd Gear	km/h (mph)	84 (52)	84 (52)	84 (52)	84 (52)
	3rd Gear	km/h (mph)	128 (79)	128 (79)	128 (79)	128 (79)
	4th Gear	km/h (mph)	176 (109)	176 (109)	176 (109)	176 (109)
Min. Turning Radius	Tire	m (ft.)	5.6 (18.4)	5.6 (18.4)	5.6 (18.4)	5.6 (18.4)
	Body	m (ft.)	5.995 (19.7)	5.995 (19.7)	5.995 (19.7)	5.995 (19.7)
Engine						
Engine Type			2AZ-FSE	2AZ-FSE	1CD-FTV	1CD-FTV
No. of Cyls. & Arrangement			4-cylinder, In-line	4-cylinder, In-line	4-cylinder, In-line	4-cylinder, In-line
Valve Mechanism			16-valve, DOHC with VVT-i	16-valve, DOHC with VVT-i	16-Valve, DOHC	16-Valve, DOHC
Bore × Stroke		mm (in.)	88.5×96.0 (3.48×3.78)	88.5×96.0 (3.48×3.78)	82.2×94.0 (3.24×3.70)	82.2×94.0 (3.24×3.70)
Displacement		cm^3 (cu.in.)	2362 (144.2)	2362 (144.2)	1995 (121.7)	1995 (121.7)
Compression Ratio			11.0	11.0	17.8	17.8 : 1
Fuel System			EFI	EFI	Common-Rail Type	Common-Rail Type
Reserch Octane No. or Cetane No.			95 or higher	95 or higher	48 or higher	48 or higher
Max. Output (EEC)		kW/rpm	120/5800	120/5800	85/3600	85/3600
Max. Torque (EEC)		Nm/rpm	230/4000	230/4000	280/2000-2200	280/2000-2200
Engine Electrical						
Battery Capacity (5HR)		Voltage & Amp. hr.	12 - 48	12 - 48	12 - 60	12 - 60
Alternator Output		Watts	1200	1200	1200	1200
Starter Output		kW	1.6	1.6	2.0	2.0
Chassis						
Transaxle Type			U151E (AT)	U151E (AT)	E357 (MT)	E357 (MT)
Gear Ratio (Counter Gear Ratio Included*6)	1st		4.235	4.235	3.538	3.538
	2nd		2.360	2.360	1.913	1.913
	3rd		1.517	1.517	1.258	1.258
	4th		1.047	1.047	0.918	0.918
	5th		0.756	0.756	0.690	0.690
	6th		—	—	—	—
	Reverse		3.378	3.378	3.583	3.583
Differential (Final) Gear Ratio			3.478	3.478	3.684	3.684
Brake Type	Front		Ventilated Disc	Ventilated Disc	Ventilated Disc	Ventilated Disc
	Rear		Solid Disc	Solid Disc	Solid Disc	Solid Disc
Suspension Type	Front		MacPherson Strut	MacPherson Strut	MacPherson Strut	MacPherson Strut
	Rear		Double Wishbone	Double Wishbone	Double Wishbone	Double Wishbone
Stabilizer Bar		Front/Rear	Standard/Standard	Standard/Standard	Standard/Standard	Standard/Standard
Steering Gear Type			Rack and Pinion	Rack and Pinion	Rack and Pinion	Rack and Pinion
Steering Gear Ratio			16.1, 15.9*4	16.1, 15.9*4	16.1, 15.9*4	16.1
Power Steering Type			Integral Type	Integral Type	Integral Type	Integral Type

*1: 205/55R 16 tires, 215/45R 17 tires
*2: 195/65R 15 tires
*3: With Sliding Roof
*4: Rough Road Package
*5: Option
*6: Only for AT

EUROPE					
5-Door Wagon					
CDT250R-AWMEYW	CDT250L-AWMEYW	CDT250L-AWMGYW	ADT251R-AWFNYW	ADT251R-AWFEYW	ADT251L-AWFEYW
4700 (185.0)	4700 (185.0)	4700 (185.0)	4700 (185.0)	4700 (185.0)	4700 (185.0)
1760 (69.3)	1760 (69.3)	1760 (69.3)	1760 (69.3)	1760 (69.3)	1760 (69.3)
1525 (60.0)	1525 (60.0)	1525 (60.0)	1525 (60.0)	1525 (60.0)	1525 (60.0)
2700 (106.3)	2700 (106.3)	2700 (106.3)	2700 (106.3)	2700 (106.3)	2700 (106.3)
1505 (59.3)*1, 1520 (59.8)*2	1505 (59.3)*1, 1520 (59.8)*2	1505 (59.3)*1, 1520 (59.8)*2	1505 (59.3)	1505 (59.3)	1505 (59.3)*1, 1520 (59.8)*2
1500 (59.1)*1, 1520 (59.8)*2	1500 (59.1)*1, 1520 (59.8)*2	1500 (59.1)*1, 1520 (59.8)*2	1510 (59.4)	1510 (59.4)	1500 (59.1)*1, 1520 (59.8)*2
2090 (82.3)	2090 (82.3)	2090 (82.3)	2090 (82.3)	2090 (82.3)	2090 (82.3)
1485 (58.5)	1485 (58.5)	1485 (58.5)	1485 (58.5)	1485 (58.5)	1485 (58.5)
1210 (47.6), 1160 (45.7)*3	1210 (47.6), 1160 (45.7)*3	1210 (47.6), 1160 (45.7)*3	1210 (47.6), 1160 (45.7)*3	1210 (47.6), 1160 (45.7)*3	1210 (47.6), 1160 (45.7)*3
910 (35.8)	910 (35.8)	910 (35.8)	910 (35.8)	910 (35.8)	910 (35.8)
1095 (43.1)	1095 (43.1)	1095 (43.1)	1095 (43.1)	1095 (43.1)	1095 (43.1)
135 (5.3), 155 (6.1)*4	135 (5.3)	135 (5.3)	135 (5.3), 155 (6.1)*4	135 (5.3), 155 (6.1)*4	135 (5.3)
13.1, 14.5*4/18.0, 19.2*4	13.1/18.0	13.1/18.0	13.1, 14.5*4/18.0, 19.2*4	13.1, 14.5*4/18.0, 19.2*4	13.1/18.0
860 to 900 (1896 to 1984)	860 to 900 (1896 to 1984)	860 to 900 (1896 to 1984)	895 to 930 (1973 to 2050)	895 to 930 (1973 to 2050)	895 to 930 (1973 to 2050)
580 to 595 (1279 to 1312)	580 to 595 (1279 to 1312)	580 to 595 (1279 to 1312)	585 to 595 (1290 to 1312)	585 to 600 (1290 to 1323)	585 to 600 (1290 to 1323)
1440 to 1495 (3175 to 3296)	1440 to 1495 (3175 to 3296)	1440 to 1495 (3175 to 3296)	1480 to 1525 (3263 to 3362)	1480 to 1530 (3263 to 3373)	1480 to 1530 (3263 to 3373)
985 (2172)	985 (2172)	985 (2172)	1025 (2260)	1025 (2260)	1025 (2260)
985 (2172)	985 (2172)	985 (2172)	945 (2083)	945 (2083)	945 (2083)
1970 (4344)	1970 (4344)	1970 (4344)	1970 (4344)	1970 (4344)	1970 (4344)
0.520 (18.4)	0.520 (18.4)	0.520 (18.4)	0.520 (18.4)	0.520 (18.4)	0.520 (18.4)
60 (13.2)	60 (13.2)	60 (13.2)	60 (13.2)	60 (13.2)	60 (13.2)
195 (121)	195 (121)	195 (121)	210 (131)	210 (131)	210 (131)
—	—	—	—	—	—
11.4	11.4	11.4	9.3	9.3	9.3
17.8	17.8	17.8	16.7	16.7	16.7
45 (27)	45 (27)	45 (27)	44 (27)	44 (27)	44 (27)
84 (52)	84 (52)	84 (52)	82 (50)	82 (50)	82 (50)
128 (79)	128 (79)	128 (79)	129 (80)	129 (80)	129 (80)
176 (109)	176 (109)	176 (109)	183 (114)	183 (114)	183 (114)
5.6 (18.4)	5.6 (18.4)	5.6 (18.4)	5.6 (18.4)	5.6 (18.4)	5.6 (18.4)
5.995 (19.7)	5.995 (19.7)	5.995 (19.7)	5.995 (19.7)	5.995 (19.7)	5.995 (19.7)
1CD-FTV	1CD-FTV	1CD-FTV	2AD-FTV	2AD-FTV	2AD-FTV
4-cylinder, In-line	4-cylinder, In-line	4-cylinder, In-line	4-cylinder, In-line	4-cylinder, In-line	4-cylinder, In-line
16-Valve, DOHC	16-Valve, DOHC	16-Valve, DOHC	16-Valve, DOHC	16-Valve, DOHC	16-Valve, DOHC
82.2×94.0 (3.24×3.70)	82.2×94.0 (3.24×3.70)	82.2×94.0 (3.24×3.70)	86.0×96.0 (3.39×3.78)	86.0×96.0 (3.39×3.78)	86.0×96.0 (3.39×3.78)
1995 (121.7)	1995 (121.7)	1995 (121.7)	2231 (136.1)	2231 (136.1)	2231 (136.1)
17.8 : 1	17.8 : 1	17.8	16.8 : 1	16.8 : 1	16.8 : 1
Common-Rail Type	Common-Rail Type	Common-Rail Type	Common-Rail Type	Common-Rail Type	Common-Rail Type
48 or higher	48 or higher	48 or higher	48 or higher	48 or higher	48 or higher
85/3600	85/3600	85/3600	110/3600	110/3600	110/3600
280/2000-2200	280/2000-2200	280/2000-2200	310/2000-3200	310/2000-3200	310/2000-3200
12 - 60	12 - 60	12 - 60	12 - 67	12 - 67	12 - 67
1200	1200	1200	1200	1200	1200
2.0	2.0	2.0	2.0	2.0	2.0
E357 (MT)	E357 (MT)	E357 (MT)	EA61 (MT)	EA61 (MT)	EA61 (MT)
3.538	3.538	3.538	3.538	3.538	3.538
1.913	1.913	1.913	1.913	1.913	1.913
1.258	1.258	1.258	1.218	1.218	1.218
0.918	0.918	0.918	0.860	0.860	0.860
0.690	0.690	0.690	0.790	0.790	0.790
—	—	—	0.673	0.673	0.673
3.583	3.583	3.583	3.831	3.831	3.831
3.684	3.684	3.684	3.777*7/3.238*8	3.777*7/3.238*8	3.777*7/3.238*8
Ventilated Disc	Ventilated Disc	Ventilated Disc	Ventilated Disc	Ventilated Disc	Ventilated Disc
Solid Disc	Solid Disc	Solid Disc	Solid Disc	Solid Disc	Solid Disc
MacPherson Strut	MacPherson Strut	MacPherson Strut	MacPherson Strut	MacPherson Strut	MacPherson Strut
Double Wishbone	Double Wishbone	Double Wishbone	Double Wishbone	Double Wishbone	Double Wishbone
Standard/Standard	Standard/Standard	Standard/Standard	Standard/Standard	Standard/Standard	Standard/Standard
Rack and Pinion	Rack and Pinion	Rack and Pinion	Rack and Pinion	Rack and Pinion	Rack and Pinion
16.1, 15.9*4	16.1	16.1	16.1, 15.9*4	16.1, 15.9*4	16.1
Integral Type	Integral Type	Integral Type	Integral Type	Integral Type	Integral Type

Area			EUROPE			
Body Type			5-Door Wagon			
Model Code			ADT251R-AWFGYW	ADT251L-AWFGYW	ADT251R-AWFEXW	ADT251L-AWFEXW
Major Dimensions & Vehicle Weights						
Overall	Length	mm (in.)	4700 (185.0)	4700 (185.0)	4700 (185.0)	4700 (185.0)
	Width	mm (in.)	1760 (69.3)	1760 (69.3)	1760 (69.3)	1760 (69.3)
	Height	mm (in.)	1525 (60.0)	1525 (60.0)	1525 (60.0)	1525 (60.0)
Wheel Base		mm (in.)	2700 (106.3)	2700 (106.3)	2700 (106.3)	2700 (106.3)
Tread	Front	mm (in.)	1505 (59.3)	1505 (59.3)*1, 1520 (59.8)*2	1505 (59.3)	1505 (59.3)*1, 1520 (59.8)*2
	Rear	mm (in.)	1510 (59.4)	1500 (59.1)*1, 1520 (59.8)*2	1510 (59.4)	1500 (59.1)*1, 1520 (59.8)*2
Room	Length	mm (in.)	2090 (82.3)	2090 (82.3)	2090 (82.3)	2090 (82.3)
	Width	mm (in.)	1485 (58.5)	1485 (58.5)	1485 (58.5)	1485 (58.5)
	Height	mm (in.)	1210 (47.6), 1160 (45.7)*3	1210 (47.6), 1160 (45.7)*3	1210 (47.6), 1160 (45.7)*3	1210 (47.6), 1160 (45.7)*3
Overhang	Front	mm (in.)	910 (35.8)	910 (35.8)	910 (35.8)	910 (35.8)
	Rear	mm (in.)	1095 (43.1)	1095 (43.1)	1095 (43.1)	1095 (43.1)
Min. Running Ground Clearance		mm (in.)	135 (5.3), 155 (6.1)*4	135 (5.3)	135 (5.3), 155 (6.1)*4	135 (5.3)
Angle of Approach/Departure		degrees	13.1, 14.5*4/18.0, 19.2*4	13.1/18.0	13.1, 14.5*4/18.0, 19.2*4	13.1/18.0
Curb Weight	Front	kg (lb)	895 to 930 (1973 to 2050)	895 to 930 (1973 to 2050)	900 to 935 (1984 to 2061)	900 to 935 (1984 to 2061)
	Rear	kg (lb)	585 to 600 (1290 to 1323)	585 to 600 (1290 to 1323)	585 to 600 (1290 to 1323)	585 to 600 (1290 to 1323)
	Total	kg (lb)	1480 to 1530 (3263 to 3373)	1480 to 1530 (3263 to 3373)	1485 to 1535 (3274 to 3384)	1485 to 1535 (3274 to 3384)
Gross Vehicle Weight	Front	kg (lb)	1025 (2260)	1025 (2260)	1025 (2260)	1025 (2260)
	Rear	kg (lb)	945 (2083)	945 (2083)	945 (2083)	945 (2083)
	Total	kg (lb)	1970 (4344)	1970 (4344)	1970 (4344)	1970 (4344)
Luggage Compartment Capacity		m^3 (cu.ft.)	0.520 (18.4)	0.520 (18.4)	0.520 (18.4)	0.520 (18.4)
Fuel Tank Capacity		L (Us.gal, Imp.gal)	60 (13.2)	60 (13.2)	60 (13.2)	60 (13.2)
Performance						
Max. Speed		km/h (mph)	210 (131)	210 (131)	220 (138)	220 (138)
Max. Cruising Speed		km/h (mph)	—	—	—	—
Acceleration	0 to 100 km/h	sec.	9.3	9.3	8.6	8.6
	0 to 400 m	sec.	16.7	16.7	16.3	16.3
Max. Permissible Speed	1st Gear	km/h (mph)	44 (27)	44 (27)	44 (27)	44 (27)
	2nd Gear	km/h (mph)	82 (50)	82 (50)	82 (50)	82 (50)
	3rd Gear	km/h (mph)	129 (80)	129 (80)	129 (80)	129 (80)
	4th Gear	km/h (mph)	183 (114)	183 (114)	183 (114)	183 (114)
Min. Turning Radius	Tire	m (ft.)	5.6 (18.4)	5.6 (18.4)	5.6 (18.4)	5.6 (18.4)
	Body	m (ft.)	5.995 (19.7)	5.995 (19.7)	5.995 (19.7)	5.995 (19.7)
Engine						
Engine Type			2AD-FTV	2AD-FTV	2AD-FHV	2AD-FHV
No. of Cyls. & Arrangement			4-cylinder, In-line	4-cylinder, In-line	4-cylinder, In-line	4-cylinder, In-line
Valve Mechanism			16-Valve, DOHC	16-Valve, DOHC	16-Valve, DOHC	16-Valve, DOHC
Bore × Stroke		mm (in.)	86.0×96.0 (3.39×3.78)	86.0×96.0 (3.39×3.78)	86.0×96.0 (3.39×3.78)	86.0×96.0 (3.39×3.78)
Displacement		cm^3 (cu.in.)	2231 (136.1)	2231 (136.1)	2231 (136.1)	2231 (136.1)
Compression Ratio			16.8 : 1	16.8 : 1	15.8 : 1	15.8 : 1
Fuel System			Common-Rail Type	Common-Rail Type	Common-Rail Type	Common-Rail Type
Reserch Octane No. or Cetane No.			48 or higher	48 or higher	48 or higher	48 or higher
Max. Output (EEC)		kW/rpm	110/3600	110/3600	130/3600	130/3600
Max. Torque (EEC)		Nm/rpm	310/2000-3200	310/2000-3200	400/2000-2600	400/2000-2600
Engine Electrical						
Battery Capacity (5HR)		Voltage & Amp. hr.	12 - 67	12 - 67	12 - 67	12 - 67
Alternator Output		Watts	1200	1200	1200	1200
Starter Output		kW	2.0	2.0	2.0	2.0
Chassis						
Transaxle Type			EA61 (MT)	EA61 (MT)	EA60 (MT)	EA60 (MT)
Gear Ratio (Counter Gear Ratio Included*6)	1st		3.538	3.538	3.538	3.538
	2nd		1.913	1.913	1.913	1.913
	3rd		1.218	1.218	1.218	1.218
	4th		0.860	0.860	0.860	0.860
	5th		0.790	0.790	0.790	0.790
	6th		0.673	0.673	0.638	0.638
	Reverse		3.831	3.831	3.831	3.831
Differential (Final) Gear Ratio			3.777*7/3.238*8	3.777*7/3.238*8	3.777*7/3.238*8	3.777*7/3.238*8
Brake Type	Front		Ventilated Disc	Ventilated Disc	Ventilated Disc	Ventilated Disc
	Rear		Solid Disc	Solid Disc	Solid Disc	Solid Disc
Suspension Type	Front		MacPherson Strut	MacPherson Strut	MacPherson Strut	MacPherson Strut
	Rear		Double Wishbone	Double Wishbone	Double Wishbone	Double Wishbone
Stabilizer Bar		Front/Rear	Standard/Standard	Standard/Standard	Standard/Standard	Standard/Standard
Steering Gear Type			Rack and Pinion	Rack and Pinion	Rack and Pinion	Rack and Pinion
Steering Gear Ratio			16.1, 15.9*4	16.1	16.1, 15.9*4	16.1
Power Steering Type			Integral Type	Integral Type	Integral Type	Integral Type

*1: 205/55R 16 tires, 215/45R 17 tires
*2: 195/65R 15 tires
*3: With Sliding Roof
*4: Rough Road Package
*5: Option
*6: Only for AT
*7: For 1st to 4th
*8: For 5th, 6th, Reverse

EUROPE		GENERAL COUNTRIES		
5-Door Wagon		4-Door Sedan		
ADT251R-AWFGXW	ADT251L-AWFGXW	AZT250L-AEMNK	AZT250R-AEPNK	AZT250L-AEPNK
4700 (185.0)	4700 (185.0)	4630 (182.3)	4630 (182.3)	4630 (182.3)
1760 (69.3)	1760 (69.3)	1760 (69.3)	1760 (69.3)	1760 (69.3)
1525 (60.0)	1525 (60.0)	1480 (58.3)	1480 (58.3)	1480 (58.3)
2700 (106.3)	2700 (106.3)	2700 (106.3)	2700 (106.3)	2700 (106.3)
1505 (59.3)	1505 (59.3)*1, 1520 (59.8)*2	1505 (59.3)*1, 1520 (59.8)*2	1505 (59.3)*1, 1520 (59.8)*2	1505 (59.3)*1, 1520 (59.8)*2
1510 (59.4)	1500 (59.1)*1, 1520 (59.8)*2	1500 (59.1)*1, 1520 (59.8)*2	1500 (59.1)*1, 1520 (59.8)*2	1500 (59.1)*1, 1520 (59.8)*2
2090 (82.3)	2090 (82.3)	2090 (82.3)	2090 (82.3)	2090 (82.3)
1485 (58.5)	1485 (58.5)	1485 (58.5)	1485 (58.5)	1485 (58.5)
1210 (47.6), 1160 (45.7)*3	1210 (47.6), 1160 (45.7)*3	1210 (47.6), 1160 (45.7)*3	1210 (47.6), 1160 (45.7)*3	1210 (47.6), 1160 (45.7)*3
910 (35.8)	910 (35.8)	910 (35.8)	910 (35.8)	910 (35.8)
1095 (43.1)	1095 (43.1)	1025 (40.4)	1025 (40.4)	1025 (40.4)
135 (5.3), 155 (6.1)*4	135 (5.3)	135 (5.3), 155 (6.1)*4	135 (5.3), 155 (6.1)*4	135 (5.3), 155 (6.1)*4
13.1, 14.5*4/18.0, 19.2*4	13.1/18.0	13.1, 14.5*4/18.7, 20.1*4	13.1, 14.5*4/18.7, 20.1*4	13.1, 14.5*4/18.7, 20.1*4
900 to 935 (1984 to 2061)	900 to 935 (1984 to 2061)	750 to 780 (1653 to 1720)	780 to 810 (1720 to 1786)	780 to 810 (1720 to 1786)
585 to 600 (1290 to 1323)	585 to 600 (1290 to 1323)	525 to 530 (1157 to 1168)	525 to 530 (1157 to 1168)	525 to 530 (1157 to 1168)
1485 to 1535 (3274 to 3384)	1485 to 1535 (3274 to 3384)	1275 to 1310 (2810 to 2888)	1305 to 1340 (2877 to 2954)	1305 to 1340 (2877 to 2954)
1025 (2260)	1025 (2260)	890 (1962)	890 (1962)	890 (1962)
945 (2083)	945 (2083)	915 (2017)	915 (2017)	915 (2017)
1970 (4344)	1970 (4344)	1805 (3979)	1805 (3979)	1805 (3979)
0.520 (18.4)	0.520 (18.4)	0.520 (18.4)	0.520 (18.4)	0.520 (18.4)
60 (13.2)	60 (13.2)	60 (13.2)	60 (13.2)	60 (13.2)
220 (138)	220 (138)	195 (121)	190 (118)	190 (118)
—	—	—	—	—
8.6	8.6	10.0	11.8	11.8
16.3	16.3	17.1	18.0	18.0
44 (27)	44 (27)	51 (31)	62 (38)	62 (38)
82 (50)	82 (50)	88 (54)	111 (68)	111 (68)
129 (80)	129 (80)	136 (84)	174 (108)	174 (108)
183 (114)	183 (114)	177 (109)	—	—
5.6 (18.4)	5.6 (18.4)	5.6 (18.4)	5.6 (18.4)	5.6 (18.4)
5.995 (19.7)	5.995 (19.7)	5.995 (19.7)	5.995 (19.7)	5.995 (19.7)
2AD-FHV	2AD-FHV	1AZ-FE	1AZ-FE	1AZ-FE
4-cylinder, In-line	4-cylinder, In-line	4-cylinder, In-line	4-cylinder, In-line	4-cylinder, In-line
16-Valve, DOHC	16-Valve, DOHC	16-valve, DOHC without VVT-i	16-valve, DOHC without VVT-i	16-valve, DOHC without VVT-i
86.0×96.0 (3.39×3.78)	86.0×96.0 (3.39×3.78)	86.0×86.0 (3.39×3.39)	86.0×86.0 (3.39×3.39)	86.0×86.0 (3.39×3.39)
2231 (136.1)	2231 (136.1)	1998 (121.9)	1998 (121.9)	1998 (121.9)
15.8 : 1	15.8 : 1	9.5	9.5	9.5
Common-Rail Type	Common-Rail Type	EFI	EFI	EFI
48 or higher	48 or higher	95 or higher	95 or higher	95 or higher
130/3600	130/3600	100/5600	100/5600	100/5600
400/2000-2600	400/2000-2600	190/4000	190/4000	190/4000
12 - 67	12 - 67	12 -32, 48*5	12 -32, 48*5	12 -32, 48*5
1200	1200	1200	1200	1200
2.0	2.0	1.3	1.3	1.3
EA60 (MT)	EA60 (MT)	E354 (MT)	U241E (AT)	U241E (AT)
3.538	3.538	3.538	3.943	3.943
1.913	1.913	2.045	2.197	2.197
1.218	1.218	1.333	1.413	1.413
0.860	0.860	1.028	1.020	1.020
0.790	0.790	0.820	—	—
0.638	0.638	—	—	—
3.831	3.831	3.583	3.145	3.145
3.777*7/3.238*8	3.777*7/3.238*8	3.944	2.923	2.923
Ventilated Disc	Ventilated Disc	Ventilated Disc	Ventilated Disc	Ventilated Disc
Solid Disc	Solid Disc	Solid Disc	Solid Disc	Solid Disc
MacPherson Strut	MacPherson Strut	MacPherson Strut	MacPherson Strut	MacPherson Strut
Double Wishbone	Double Wishbone	Double Wishbone	Double Wishbone	Double Wishbone
Standard/Standard	Standard/Standard	Standard/Standard	Standard/Standard	Standard/Standard
Rack and Pinion	Rack and Pinion	Rack and Pinion	Rack and Pinion	Rack and Pinion
16.1, 15.9*4	16.1	16.1, 15.9*4	16.1, 15.9*4	16.1, 15.9*4
Integral Type	Integral Type	Integral Type	Integral Type	Integral Type

AP

INTRODUCTION

OUTLINE OF NEW FEATURES

The following changes have been made.

1. Model Line-up

The following models are added and discontinued.

ADDED MODELS					
Destination	Engine	Body Type	Grade	Transaxle	Model Code
Europe	2AD-FTV	Sedan	ENTRY	EA61 MT	**ADT251L(R)-AEFNYW**
			MID TECHNICAL		**ADT251L(R)-AEFEYW**
			MID ELEGANT		**ADT251L(R)-AEFGYW**
		Liftback	ENTRY		**ADT251R-ALFNYW**
			MID TECHNICAL		**ADT251L(R)-ALFEYW**
			MID ELEGANT		**ADT251L(R)-ALFGYW**
		Wagon	ENTRY		**ADT251R-AWFNYW**
			MID TECHNICAL		**ADT251L(R)-AWFEYW**
			MID ELEGANT		**ADT251L(R)-AWFGYW**
	2AD-FHV (D-CAT)	Sedan	MID TECHNICAL	EA60 MT	**ADT251L(R)-AEFEXW**
			MID ELEGANT		**ADT251L(R)-AEFGXW**
		Liftback	MID TECHNICAL		**ADT251L(R)-ALFEXW**
			MID ELEGANT		**ADT251L(R)-ALFGXW**
		Wagon	MID TECHNICAL		**ADT251L(R)-AWFEXW**
			MID ELEGANT		**ADT251L(R)-AWFGXW**

DISCONTINUED MODELS					
Europe	1ZZ-FE	Sedan	ENTRY	U341E AT	**ZZT251L(R)-AEPNKW**
			MID ELEGANT	C250 MT	**ZZT251R-AEMGKW**
				U341E AT	**ZZT251R-AEPGKW**
		Liftback	ENTRY	U341E AT	**ZZT251L-ALPNKW**
			MID ELEGANT	C250 MT	**ZZT251R-AEMEKW**
				U341E AT	**ZZT251R-ALPGKW**
		Wagon	ENTRY	U341E AT	**ZZT251L-AWPNKW**
			MID ELEGANT	C250 MT	**ZZT251R-AWMGKW**

(Continued)

DISCONTINUED MODELS					
Destination	Engine	Body Type	Grade	Transaxle	Model Code
Europe	1AZ-FE	Wagon	MID TECHNICAL	U241E AT	**AZT250L-AWPEKW**
			MID ELEGANT		**AZT250L-AWPGKW**
	1AZ-FSE	Liftback	MID ELEGANT	E354 MT	**AZT250R-ALMGHW**
				U241E AT	**AZT250R-ALPGHW**
		Wagon		E354 MT	**AZT250R-AWMGHW**
				U241E AT	**AZT250R-AWPGHW**
	1CD-FTV (D-CAT)	Sedan	MID TECHNICAL	E357 MT	**CDT250L(R)-AEMEXW**
			MID ELEGANT		**CDT250L(R)-AEMGXW**

IN

2. Exterior (For models with 2AD-FTV/2AD-FHV engines)

Tire & Wheel

The tires & wheels for models with 2AD-FTV/2AD-FHV engines are set as follows:

Tire Size		205/55R16		
Disc Wheel	Size	16 × 61/2 J	16 × 61/2 JJ	16 × 61/2 JJ
	Material	Steel	Aluminum	Aluminum
P. C. D.* [mm (in.)]		114.3 (4.5)	114.3 (4.5)	114.3 (4.5)
Off Set [mm (in.)]		45 (1.8)	45 (1.8)	45 (1.8)
Full Cap/ Wheel Design		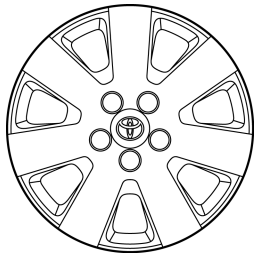 288NF26C	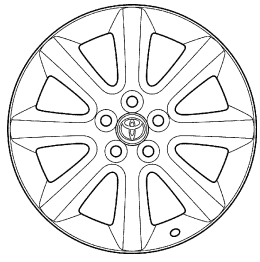 240MO21	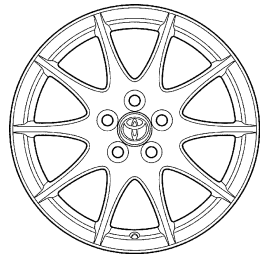 240MO22
Engine	2AD-FTV	Standard	Option	Option
	2AD-FHV	Standard	Option	Option

*: P.C.D. (Pitch Circle Diameter)

Glass

The acoustic glass is used on the front windshield glass of the models with 2AD-FTV/2AD-FHV engines. The film inserted into the glass is composed of three layers. The intermediate layer is an acoustic film. The film reduces the droning noise by lowering the primary resonance of the glass.

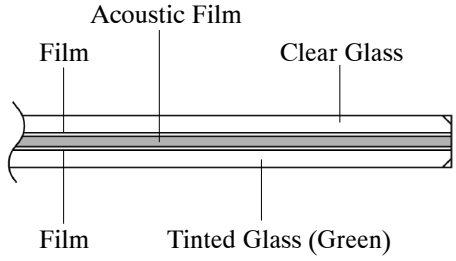

Cross Section of Acoustic Glass

266IN26

Glass Portion	Equipment	Glass Type	UV Reduction Rate (as reference)	Visible Light Penetration (as reference)
Windshield	Standard	Acoustic	100 %	70 % Min.
Front Door	Standard	Green	82 %	70 % Min.
Rear Door	Standard	Green	82 %	70 % Min.
	Option (Wagon only)	Privacy	96 %	24 %
Rear Quarter (Wagon only)	Standard	Green	82 %	—
	Option	Privacy	96 %	—
Back Window or Back Door	Standard	Green	78 %	70 % Min.
	Option (Wagon only)	Privacy	96 %	20 %

3. Engine

1CD-FTV (D-CAT) engine is discontinued. Newly developed 2AD-FTV and 2AD-FHV (D-CAT) engines are added.

- The 2AD-FTV TOYOTA D-4D (Direct injection 4 Stroke common-rail Diesel engine) is in-line 4-cylinder, 2.2 liter and 16-valve DOHC turbocharged with intercooler diesel engine.
  This engine uses direct injection system and common-rail system to realize higher performance, clean emission, low noise and low vibration. For details, see page 18.
- The 2AD-FHV engine based on the 2AD-FTV engine uses the D-CAT (Diesel Clean Advanced Technology) system and Piezo injector to realize higher performance and cleaner emissions than the 2AD-FTV engine. For details, see page 69.

4. Clutch (For models with 2AD-FTV/2AD-FHV engines)

The self-adjusting type clutch cover is used on the models with the 2AD-FTV/2AD-FHV engines.

- This type clutch cover maintains a constant diaphragm spring posture regardless of the amount of the clutch disc wear. Consequently, it maintains the clutch pedal effort constant to ensure a comfortable clutch feel. For details, see page 102.

5. Manual Transaxle (For models with 2AD-FTV/2AD-FHV engines)

Newly developed EA60 and EA61 types 6-speed manual transaxles are used in models with 2AD-FTV/2AD-FHV engines. For details, see page 106.

- 2AD-FTV × EA61
- 2AD-FHV × EA60

6. Drive Shaft (For models with 2AD-FTV/2AD-FHV engines)

The drive shaft uses the tripod type CVJ (Constant-Velocity Joint) on the differential side, and the Rzeppa type CVJ on the wheel side.

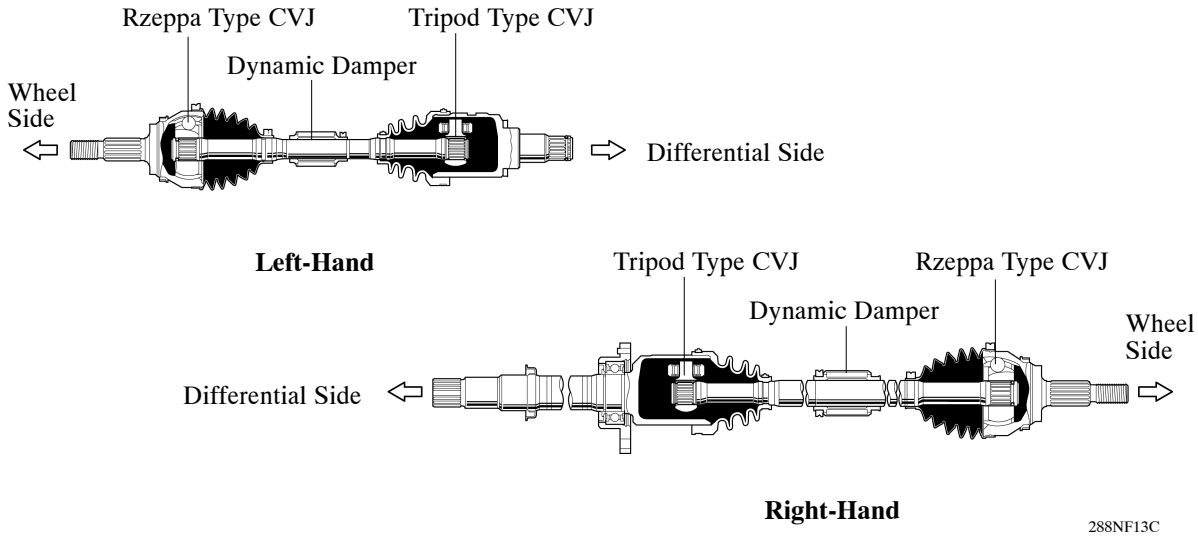

7. Suspension and Axle (For models with 2AD-FTV/2AD-FHV engines)

The following items are changed in models with 2AD-FTV/2AD-FHV engines:

- Alignment
- Spring force of the coil spring and its installed load
- The diameters of the front stabilizer bar, front hub bearing and front lower ball joint are increased.
- Damping force of the front and rear shock absorbers

Alignment specifications for models with 2AD-FTV/2AD-FHV engines are as follows:

Package			Normal	Rough Road
Front Wheel Alignment	Tread*	mm (in.)	1505 (59.3)	
	Caster*	degrees	2° 48’	2° 35’
	Camber*	degrees	-0° 34’	-0° 21’
	Toe-in*	mm (in.)	1.3 (0.05)	1.6 (0.06)
	King Pin Inclination*	degrees	12° 21’	11° 51’
Rear Wheel Alignment	Tread*	mm (in.)	1510 (59.4)	
	Camber*	degrees	-0° 54’	-0° 30’
	Toe-in*	mm (in.)	3.0 (0.12)	

*: Unladen Vehicle Condition

8. Brake (For models with 2AD-FTV/2AD-FHV engines)

The brake system for models with 2AD-FTV/2AD-FHV engines is set as follows:

Engine		2AD-FTV	2AD-FHV
Front Brake	Type	Ventilated Disc	Ventilated Disc
	Rotor Size	for 16 in. wheel	for 16 in. wheel
Rear Brake	Type	Solid Disc	Solid Disc
	Rotor Size	for 15 in. wheel	for 15 in. wheel
Brake Control	ABS with EBD, Brake Assist, TRC, VSC	Standard	Standard
Parking Brake Type		Lever	Lever

▶ Specification ◀

Engine			2AD-FTV	2AD-FHV
Master Cylinder	Type		Tandem (Portless + Portless/BOSCH)	←
	Cylinder Diameter	mm (in.)	23.81 (0.94)	←
Front Brake	Caliper Type		16” ZOH57-26V (BOSCH)	←
	Wheel Cylinder Diameter	mm (in.)	57 (2.24)	←
	Rotor Size (D × T)	mm (in.)	295 × 26 (11.59 × 1.02)	←
	Pad Material		Pagid 660	←
Rear Brake	Caliper Type		15” ZOH38-10S (BOSCH)	←
	Wheel Cylinder Diameter	mm (in.)	38 (1.49)	←
	Rotor Size (D × T)	mm (in.)	280 × 10 (11.59 × 1.02)	←
	Pad Material		Textar T4148	←
Parking Brake	Type		Drum (Duo-servo)	←
	Drum Inner Dia.	mm (in.)	173 (6.8)	←
Brake Actuator			BOSCH	←

9. Steering (For models with 2AD-FTV/2AD-FHV engines)

The vane pump integrated with the reservoir tank is used in models with 2AD-FTV/2AD-FHV engines. The basic construction and operation are the same as those of the previous vane pump.

▶ Specification ◀

Engine	2AD-FTV	2AD-FHV
Power Steering Type	Engine Revolution Sensing type Hydraulic Power Steering	←
Gear Ratio (Overall)	16.1. 15.9*	←
No. of Turns Lock to Lock	2.96	←
Rack Stroke mm (in.)	131.8 (5.18)	←
Vane Pump Type	Pressure Return Type	←
Fluid Type	ATF Type DEXRON®II or III	←

*: Rough Road Package

10. Air Conditioner (For models with 2AD-FTV/2AD-FHV engines)

An air conditioner system has the following equipment.

Destination		Europe					
Engine		2AD-FTV				2AD-FHV	
Steering Wheel Position		LHD		RHD		LHD	RHD
Grade		ENTRY	Others	ENTRY	Others	—	—
A/C	Manual	○	—	○	—	—	—
	Auto	—	○	—	○	○	○
Heater	PTC	○	○	○	○	○	○
	Combustion	Δ	Δ	—	—	Δ	—
Clean Air Filter		○	○	○	○	○	○

○: Standard Δ: Option —: Not Available

11. Combination Meter

- The buzzer for the seat belt reminder can cancel on all models.
- Along with adopting of the oil maintenance management system for 2AD-FTV/2AD-FHV engines, engine oil change reminder light is added. For details of the oil maintenance management system, see page 65.

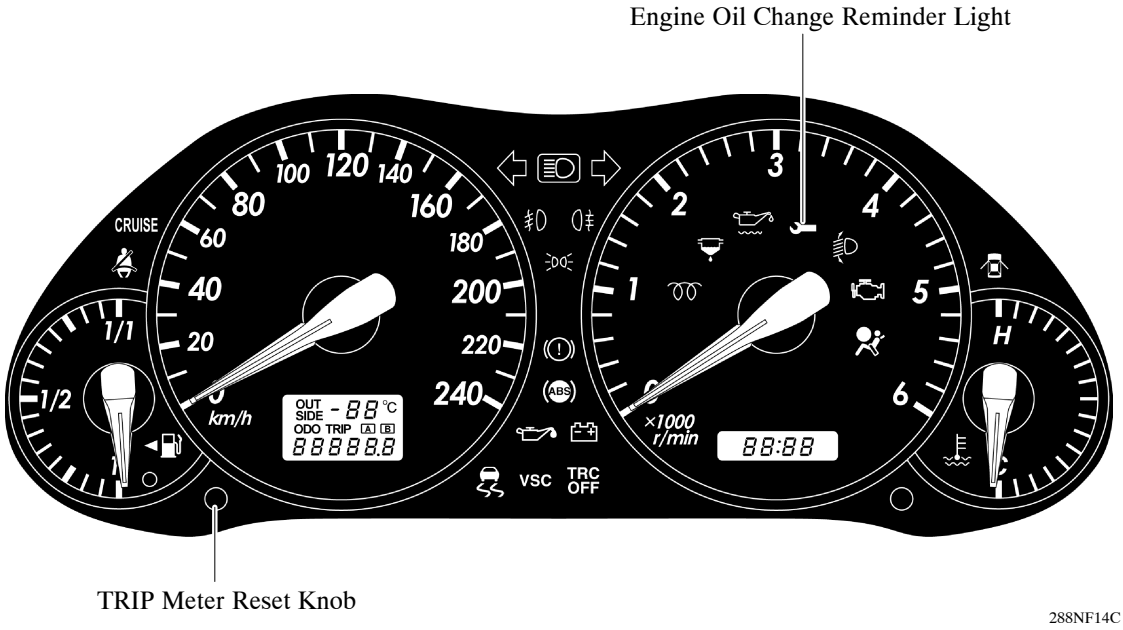

12. Seat Belt Reminder System

A buzzer reminder cancel mode is added in the seat belt reminder system.

Service Tip

Buzzer Reminder Cancel Mode Setting

1) Set the LCD on the combination meter to the ODO display.
2) Press and hold the TRIP meter reset knob within six seconds of turning the ignition switch to the ON position. Ten seconds over, while fastening the driver's seat belt or sitting front passenger's seat and fastening the passenger's seat belt, the knob cancels the buzzer reminder.
   - Driver's seat belt: Driver and front passenger side reminder buzzers cancel.
   - Front passenger's seat belt: Only front passenger side reminder buzzer cancels.
3) When this occurs, the LCD displays "b-OFF". The buzzer reminder can be switched between ON and OFF each time the TRIP meter reset knob is pressed. The LCD displays "b-ON" or "b-OFF" according to the buzzer reminder ON/OFF status. The display changes to the ODO or TRIP meter if the knob is not pressed for ten seconds.
4) Performing steps 1) and 2) again when the buzzer reminder is off exits cancel mode.
5) The cancel mode will also exit when the battery or combination meter connector is reconnected.

EXTERIOR APPEARANCE

1. 4-Door Sedan



240MO01



240MO02

2. 5-Door Liftback



240MO03



240MO04

3. 5-Door Wagon



240MO05



240MO06

MODEL CODE

ZZE130 L – A E M N K W

1 2 3 4 5 6 7 8

1	BASIC MODEL CODE
	ZZT250 : With 3ZZ-FE Engine ZZT251 : With 1ZZ-FE Engine AZT250 : With 1AZ-FSE Engine : With 1AZ-FE Engine AZT251 : With 2AZ-FSE Engine CDT250 : With 1CD-FTV Engine ADT251 : With 2AD-FTV Engine : With 2AD-FHV Engine

2	STEERING WHEEL POSITION
	L : Left-Hand Drive R : Right-Hand Drive

3	MODEL NAME
	A : AVENSIS

4	BODY TYPE
	E : 4-Door Sedan L : 5-Door Liftback W : 5-Door Wagon

5	GEAR SHIFT TYPE
	M : 5-Speed Manual, Floor F : 6-Speed Manual, Floor P : 4-Speed Automatic, Floor A : 5-Speed Automatic, Floor

6	GRADE
	N : ENTRY E : MID TECHNICAL G : MID ELEGANT

7	ENGINE SPECIFICATION
	H : DOHC EFI and Direct Injection K : Compact DOHC and EFI Y : Common-Rail Diesel X : Common-Rail Diesel and TOYOTA D-CAT System

8	DESTINATION
	W : Europe Blank : General countries

MODEL LINE-UP

EUROPE			5-Speed Manual Transaxle			
ENGINE	**BODY TYPE**	**GRADE**	**C50**	**C250**	**E354**	**E357**
3ZZ-FE	Sedan	ENTRY	ZZT250L(R)-AEMNKW	—	—	—
		MID TECHNICAL	ZZT250L-AEMEKW	—	—	—
		MID ELEGANT	ZZT250L-AEMGKW	—	—	—
	Liftback	ENTRY	ZZT250L(R)-ALMNKW	—	—	—
	Wagon	ENTRY	ZZT250L-AWMNKW	—	—	—
1ZZ-FE	Sedan	ENTRY	—	ZZT251L(R)-AEMNKW	—	—
		MID TECHNICAL	—	ZZT251L(R)-AEMEKW	—	—
		MID ELEGANT	—	ZZT251L-AEMGKW	—	—
	Liftback	ENTRY	—	ZZT251L(R)-ALMNKW	—	—
		MID TECHNICAL	—	ZZT251L(R)-ALMEKW	—	—
		MID ELEGANT	—	ZZT251L-ALMGKW	—	—
	Wagon	ENTRY	—	ZZT251L(R)-AWMNKW	—	—
		MID TECHNICAL	—	ZZT251L(R)-AWMEKW	—	—
		MID ELEGANT	—	ZZT251L-AWMGKW	—	—
1AZ-FE (Unleaded)	Sedan	MID TECHNICAL	—	—	AZT250L-AEMEKW	—
		MID ELEGANT	—	—	AZT250L-AEMGKW	—
1AZ-FSE	Sedan	MID TECHNICAL	—	—	AZT250L(R)-AEMEHW	—
		MID ELEGANT	—	—	AZT250L(R)-AEMGHW	—
	Liftback	MID TECHNICAL	—	—	AZT250L(R)-ALMEHW	—
		MID ELEGANT	—	—	AZT250L-ALMGHW	—
	Wagon	MID TECHNICAL	—	—	AZT250L(R)-AWMEHW	—
		MID ELEGANT	—	—	AZT250L-AWMGHW	—
1CD-FTV	Sedan	ENTRY	—	—	—	CDT250L(R)-AEMNYW
		MID TECHNICAL	—	—	—	CDT250L(R)-AEMEYW
		MID ELEGANT	—	—	—	CDT250L-AEMGYW
	Liftback	ENTRY	—	—	—	CDT250L(R)-ALMNYW
		MID TECHNICAL	—	—	—	CDT250L(R)-ALMEYW
		MID ELEGANT	—	—	—	CDT250L-ALMGYW
	Wagon	ENTRY	—	—	—	CDT250L(R)-AWMNYW
		MID TECHNICAL	—	—	—	CDT250L(R)-AWMEYW
		MID ELEGANT	—	—	—	CDT250L-AWMGYW

EUROPE			**6-Speed Manual Transaxle**	
ENGINE	**BODY TYPE**	**GRADE**	**EA60**	**EA61**
2AD-FTV	Sedan	ENTRY	—	ADT251L(R)-AEFNYW
		MID TECHNICAL	—	ADT251L(R)-AEFEYW
		MID ELEGANT	—	ADT251L(R)-AEFGYW
	Liftback	ENTRY	—	ADT251R-ALFNYW
		MID TECHNICAL	—	ADT251L(R)-ALFEYW
		MID ELEGANT	—	ADT251L(R)-ALFGYW
	Wagon	ENTRY	—	ADT251R-AWFNYW
		MID TECHNICAL	—	ADT251L(R)-AWFEYW
		MID ELEGANT	—	ADT251L(R)-AWFGYW
2AD-FHV	Sedan	MID TECHNICAL	ADT251L(R)-AEFEXW	—
		MID ELEGANT	ADT251L(R)-AEFGXW	—
	Liftback	MID TECHNICAL	ADT251L(R)-ALFEXW	—
		MID ELEGANT	ADT251L(R)-ALFGXW	—
	Wagon	MID TECHNICAL	ADT251L(R)-AWFEXW	—
		MID ELEGANT	ADT251L(R)-AWFGXW	—

EUROPE			Automatic Transaxle		
ENGINE	BODY TYPE	GRADE	4-Speed		5-Speed
			U241E	U341E	U151E
1ZZ-FE	Sedan	MID TECHNICAL	—	ZZT251L(R)-AEPEKW	—
		MID ELEGANT	—	ZZT251L-AEPGKW	—
	Liftback	ENTRY	—	ZZT251R-ALPNKW	—
		MID TECHNICAL	—	ZZT251L(R)-ALPEKW	—
		MID ELEGANT	—	ZZT251L-ALPGKW	—
	Wagon	MID TECHNICAL	—	ZZT251L-AWPEKW	—
		MID ELEGANT	—	ZZT251L-AWPGKW	—
1AZ-FE (Unleaded)	Sedan	MID TECHNICAL	AZT250L-AEPEKW	—	—
		MID ELEGANT	AZT250L-AEPGKW	—	—
1AZ-FSE	Sedan	MID TECHNICAL	AZT250L(R)-AEPEHW	—	—
		MID ELEGANT	AZT250L(R)-AEPGHW	—	—
	Liftback	MID TECHNICAL	AZT250L(R)-ALPEHW	—	—
		MID ELEGANT	AZT250L-ALPGHW	—	—
	Wagon	MID TECHNICAL	AZT250L(R)-AWPEHW	—	—
		MID ELEGANT	AZT250L-AWPGHW	—	—
2AZ-FSE	Sedan	MID TECHNICAL	—	—	AZT251L-AEAEHW
		MID ELEGANT	—	—	AZT251L(R)-AEAGHW
	Liftback	MID TECHNICAL	—	—	AZT251L-ALAEHW
		MID ELEGANT	—	—	AZT251L(R)-ALAGHW
	Wagon	MID TECHNICAL	—	—	AZT251L-AWAEHW
		MID ELEGANT	—	—	AZT251L-AWAGHW

GENERAL COUNSTRIES			Manual Transaxle	Automatic Transaxle
ENGINE	BODY TYPE	GRADE	5-Speed	4-Speed
			E354	U241E
1AZ-FE (Leaded)	Sedan	ENTRY	AZT250L-AEMNK	—
			—	AZT250L(R)-AEPNK

NEW FEATURES

2AD-FTV ENGINE

■ DESCRIPTION

The newly developed 2AD-FTV TOYOTA D-4D (Direct injection 4 Stroke common-rail Diesel engine) is in-line 4-cylinder, 2.2 liter, 16-valve DOHC turbocharged with intercooler diesel engine.
This engine is used direct injection system and common-rail system to realize higher performance, clean emission, low noise and low vibration.

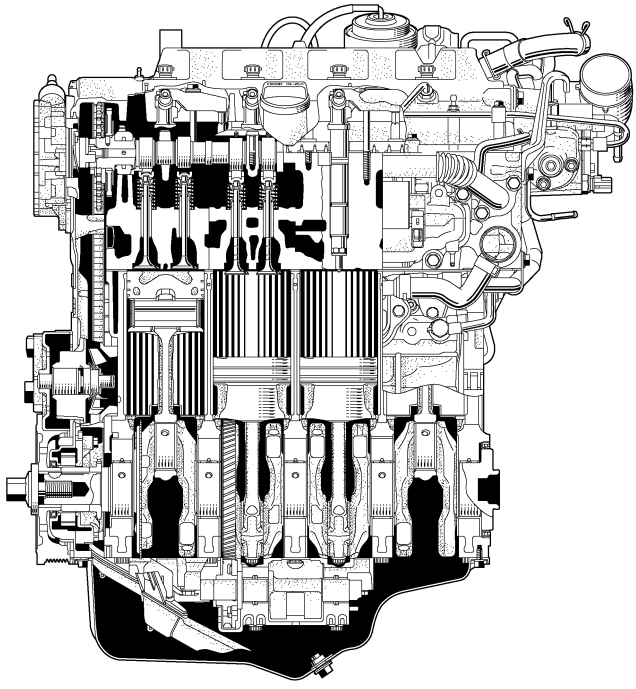

288EG01Y

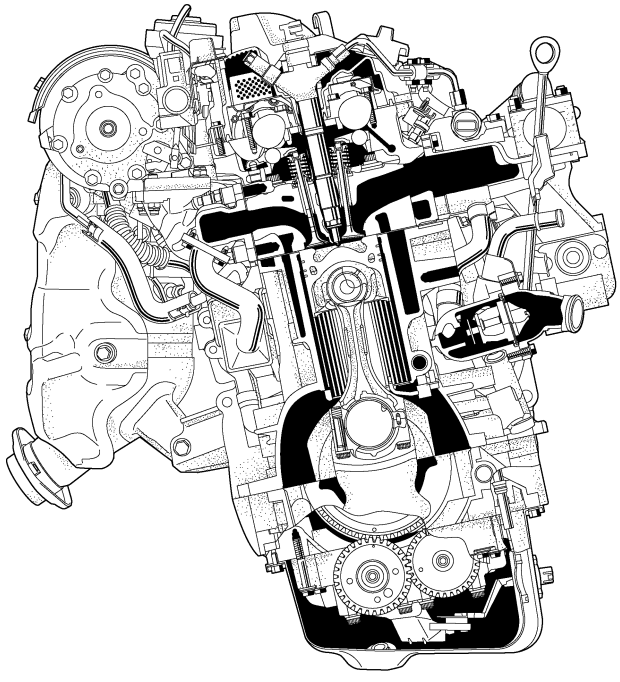

288EG02Y

▶ Engine Specification ◀

No. of Cyls. & Arrangement			4-Cylinder, In-line
Valve Mechanism			16-Valve DOHC, Chain and Gear Drive
Combustion Chamber			Direction Injection Type
Manifolds			Cross-Flow
Fuel System			Common-Rail Type
Displacement cm^3 (cu. in.)			2231 (136.1)
Bore × Stroke mm (in.)			86.0 × 96.0 (3.39 × 3.78)
Compression Ratio			16.8 : 1
Max. Output (EEC)			110 kW @ 3600 rpm
Max. Torque (EEC)			310 N·m @ 2000 – 3200 rpm
Oil Capacity		Dry	6.7 liters (7.1 US qts, 5.9 Imp. qts)
		With Oil Filter	5.9 liters (6.2 US qts, 5.2 Imp. qts)
		Without Oil Filter	5.5 liters (5.8 US qts, 4.8 Imp. qts)
Oil Grade			ACEA B1, API CF-4 or CF
Engine Coolant	Type		TOYOTA Genuine Super Long Life Coolant or Following*1
	Capacity	Without Combustion Type Power Heater	8.0 liters (8.5 US qts, 7.0 Imp. qts)
		With Combustion Type Power Heater	8.2 liters (8.7 US qts, 7.2 Imp. qts)
Firing Order			1 – 3 – 4 – 2
Fuel Cetane Number			48 or more
Emission Regulation			EURO IV
Engine Service Mass*2 (Reference) kg (lb)			165 (364)

*1: Similar high quality ethylene glycol based non-silicate, non-amine, non-nitrite, and non-borate coolant with long-life hybrid organic acid technology. (Coolant with hybrid organic acid technology consists of the combination of low phosphates and organic acids.)

*2: Weight shows the figure with the oil and engine coolant fully filled.

▶ Valve Timing ◀

: IN Valve Opening Angle
: EX Valve Opening Angle

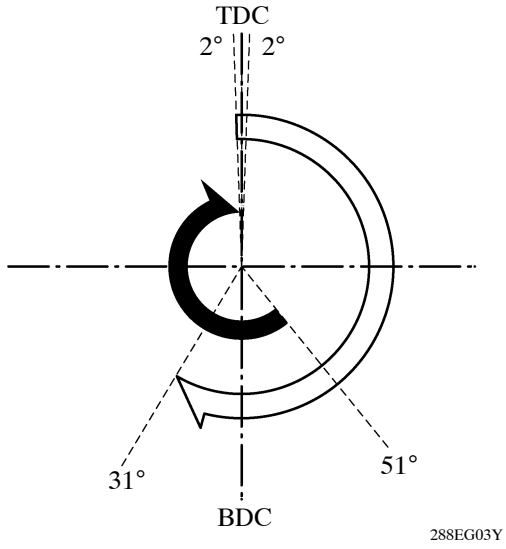

Intake	Open	2° BTDC
	Close	31° ABDC
Exhaust	Open	51° BBDC
	Close	2° ATDC

▶ Performance Curve ◀

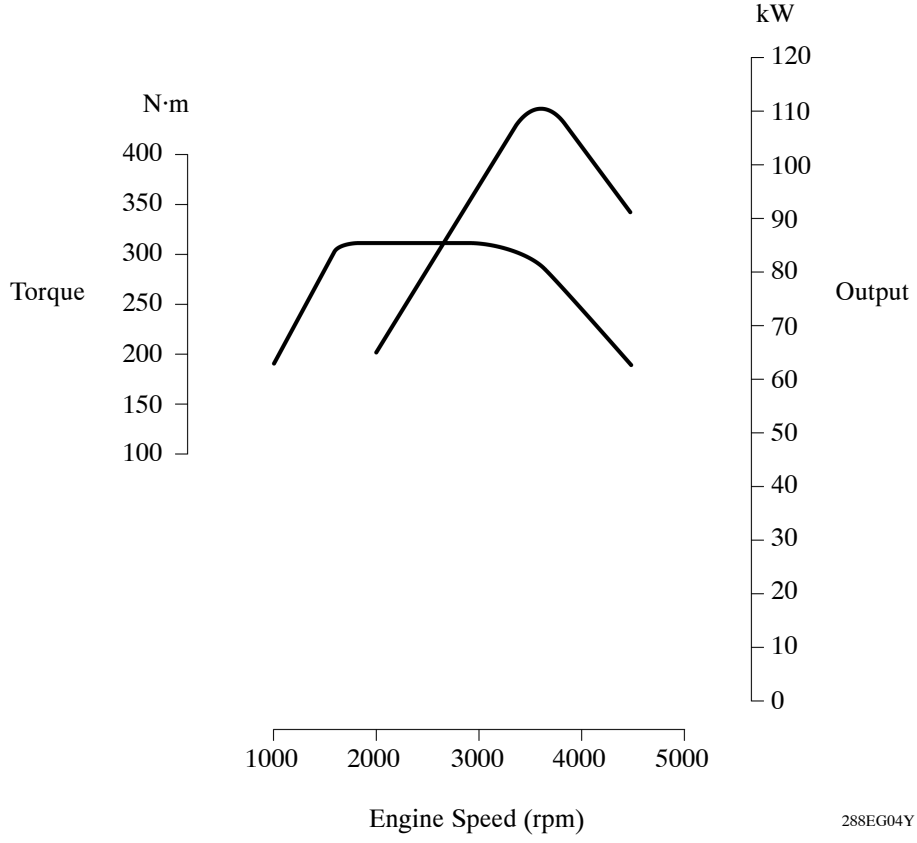

■FEATURES OF 2AD-FTV ENGINE

The 2AD-FTV engine has achieved the following performance through the use of the items listed below.

(1) High performance and reliability
(2) Low noise and vibration
(3) Lightweight and compact design
(4) Good serviceability
(5) Clean emission and fuel economy

Item		(1)	(2)	(3)	(4)	(5)
Engine Proper	A cylinder head and cylinder block made of aluminum alloy are used.			○		
	Piston provided with combustion chamber is used in conjunction with the adoption of direct injection.	○				○
	A balance shaft which is directly driven by the crankshaft is used.	○	○			
Valve Mechanism	Hydraulic lash adjuster is used.	○	○		○	
	A timing chain and chain tensioner are used.		○	○	○	
	Roller rocker arms are used.	○				○
Lubrication System	An oil filter with a replaceable element is used.				○	
	The water cooling type oil cooler is used.	○				
Cooling System	The engine coolant is used the TOYOTA Genuine SLLC (Super Long Life Coolant).				○	
Intake and Exhaust System	A rotary solenoid motor type diesel throttle control motor is used in the throttle body.					○
	A linear solenoid type EGR valve is used.					○
	A water-cooling type EGR cooler is used.					○
	The variable nozzle vane type turbocharger is used.	○				○
Fuel System	A common rail type fuel injection system is used.	○	○			○
	Compensation value and QR code printed solenoid type injector is used.	○				○
Charging System	A segment conductor type alternator is used.	○		○		
	An alternator pulley with a clutch is used.				○	
Serpentine Belt Drive System	A serpentine belt drive system is used.			○	○	
Engine Control System	A pilot injection control system is used.	○				
	A oil maintenance management system is used.				○	
	A charging control system is used.					○

NF

■ENGINE PROPER

1. Cylinder Head Cover

- Lightweight yet high-strength aluminum cylinder head cover is used.
- Acrylic rubber, which excels in heat resistance and reliability, is used for the cylinder head cover gasket.

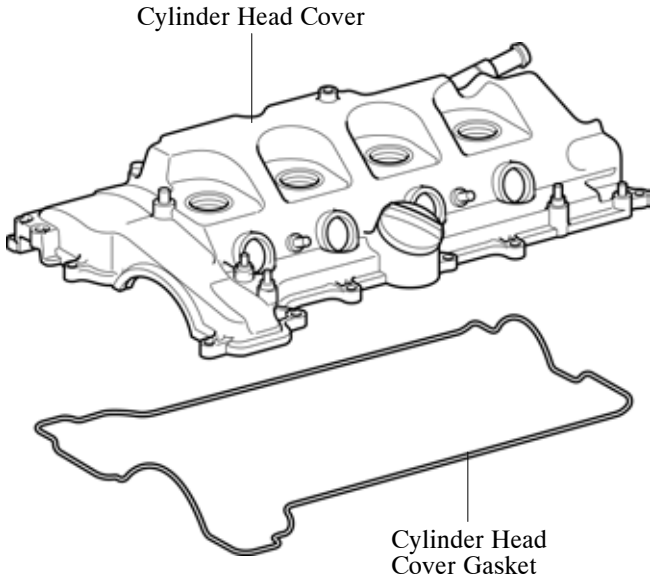

288EG12C

2. Cylinder Head

- The cylinder head is made of aluminum alloy.
- The injector is located in the center of the combustion chamber in order to improve engine performance and clean emission.
- A glow plug is placed between the intake ports of each cylinder to ensure startability.
- The passage for the EGR is provided in the cylinder head. By cooling the exhaust gas, this makes it possible to re-circulate the great amount of exhaust gas.
- A water jacket is provided to the intake and exhaust ports respectively to realize excellent cooling performance.

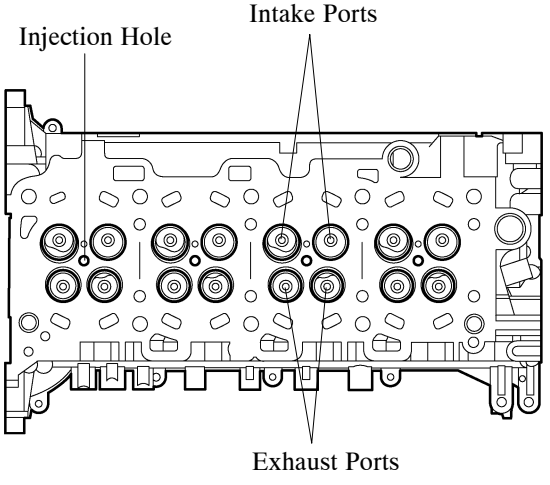

288EG13Y

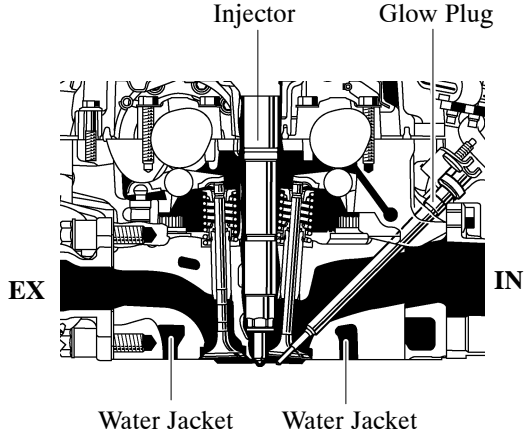

288EG14Y

3. Cylinder Block

- The cylinder block is made of aluminum alloy.
- A water passage is provided between the cylinder bores. By allowing the engine coolant to flow between the cylinder bores, this construction enables the temperature of the cylinder walls to be kept uniform.
- The liners are the spiny-type, which are manufactured so that their casting exterior forms a large irregular surface in order to enhance the adhesion between the liners and the aluminum cylinder block. The enhanced adhesion helps improve heat dissipation, resulting in a lower overall temperature and heat deformation of the cylinder bores.
- The crankshaft bearing caps with cylinder block lower case are used to reduce noise and to increase the coupling rigidity with the crankshaft.
- Cast-iron is used as a material for part of the bearing journal of crankshaft bearing cap and thus help prevent deformation by high load from crankshaft.
- Plastic region tightening bolts are used for tightening the crankshaft bearing cap.
- The liner is thin, so that reboring is not possible.

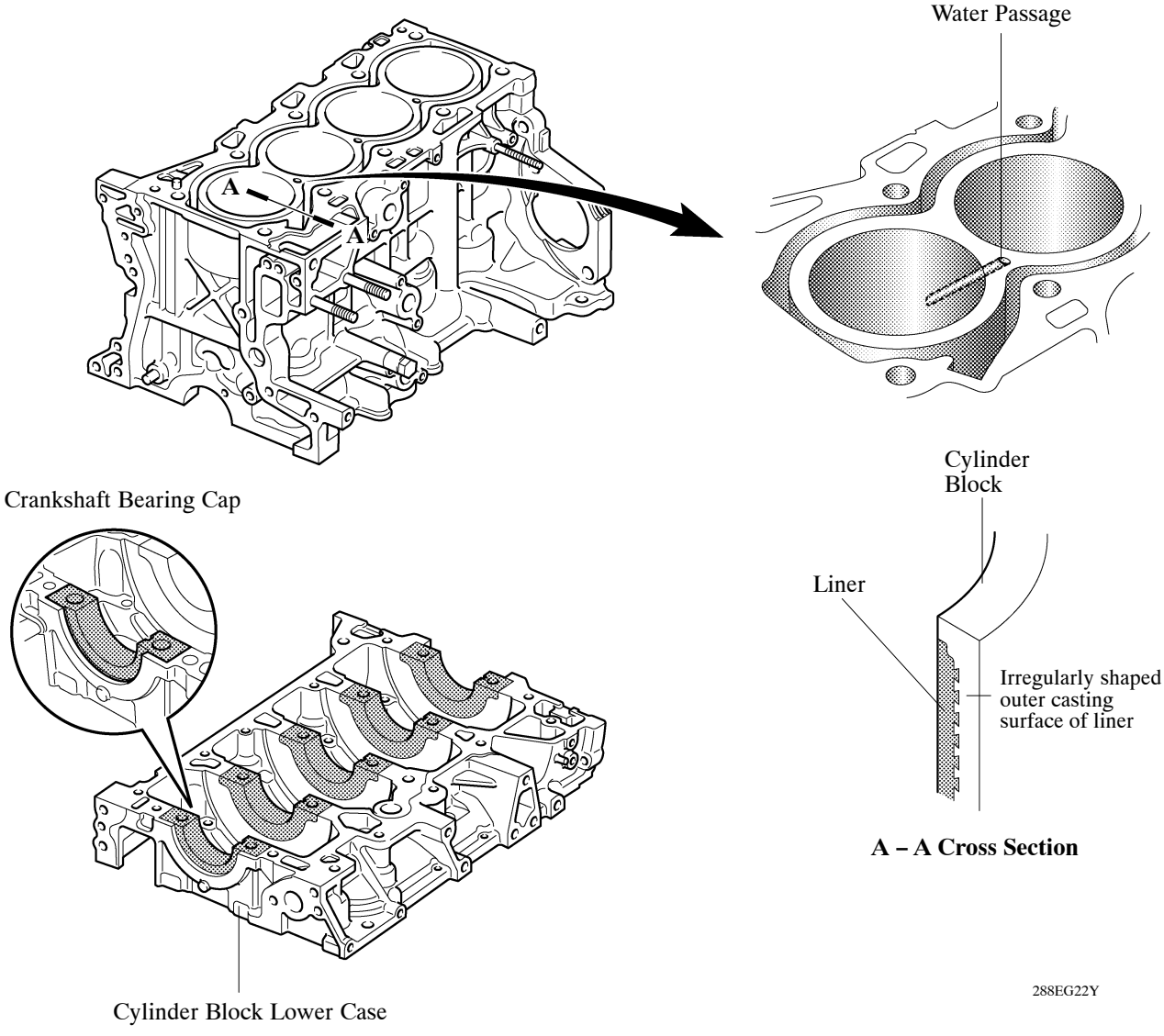

4. Piston

- The pistons are made of aluminum alloy.
- The combustion chamber is provided on the piston for direct injection.
- The shape of the combustion chamber is optimized to realize low compression ratio, high engine output, and low fuel consumption.
- A cooling channel is provided to realize excellent piston cooling performance.
- To improve the wear resistance of the top ring groove, a Ni-resist cast iron ring carrier is used.
- Along with the improved engine performance, the piston skirt is applied with resin coating to reduce friction loss.
- Full floating type piston pins are used.
- Due to increased machining precision of the cylinder bore diameter, it is not necessary to prepare pistons with different diameter.

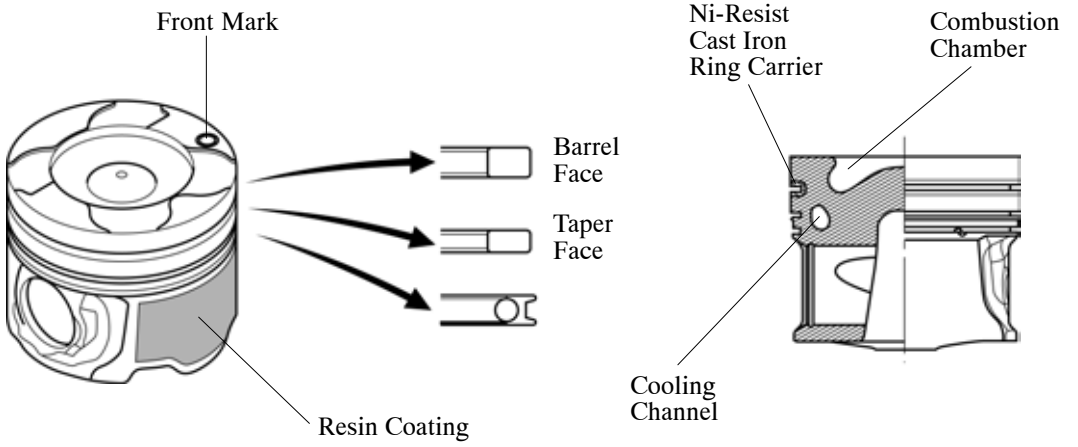

288EG08C

5. Connecting Rod and Connecting Rod Bearing

- The connecting rods and caps are made of high-strength steel for weight reduction.
- Knock pins are used at the mating surfaces of the bearing caps of the connecting rod to minimize the shifting of the bearing caps during assembly.
- Nutless-type plastic region tightening bolts are used on the connecting rods for a lighter design.
- The connecting rod bearings are reduced in width to reduce friction.

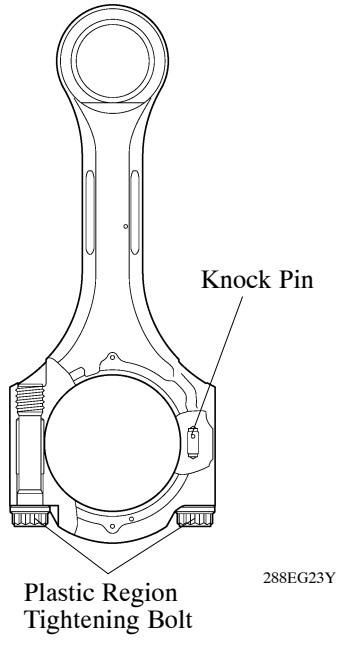

288EG23Y

6. Crankshaft

- A crankshaft made of forged steel, which excels in rigidity and wear resistance, is used.
- The crankshaft has 5 journals, 4 connecting rod pins 7 counter weights and balance shaft drive gear.

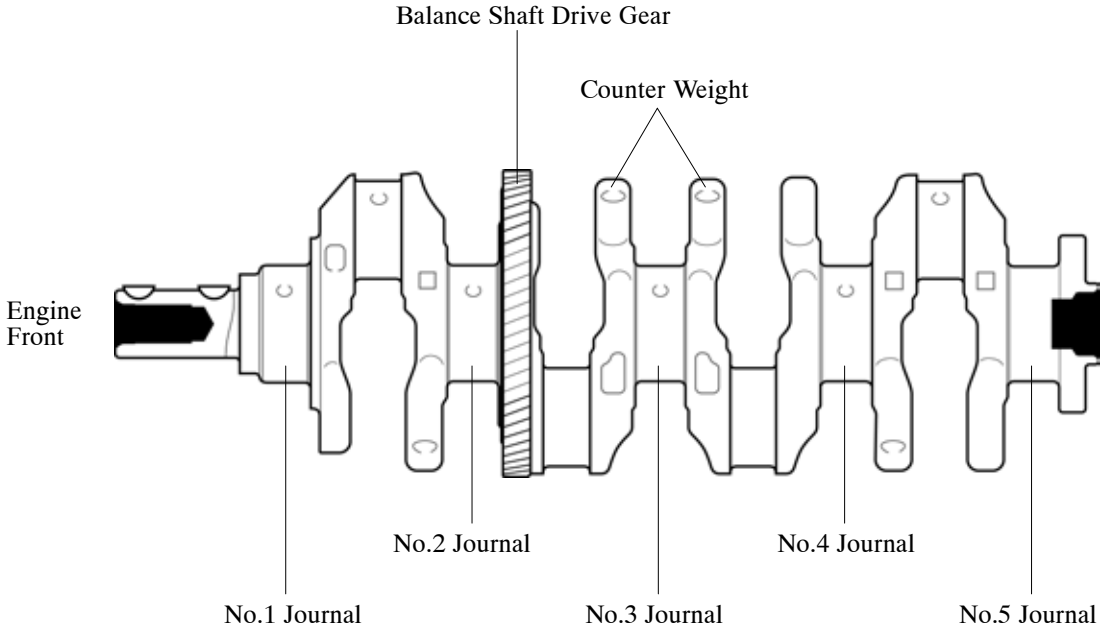

288EG10C

7. Crankshaft Pulley

The rigidity of the crankshaft pulley with its built-in torsional damper rubber reduces noise.

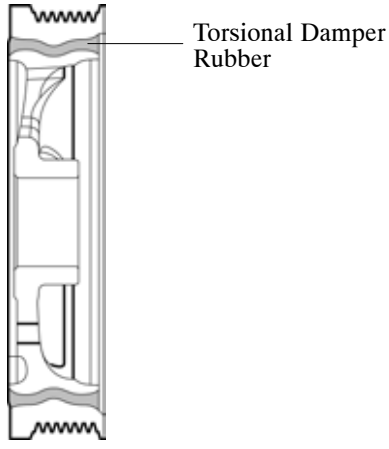

288EG11C

8. Balance Shaft

General

- Two balance shafts are used to reduce vibration.
- The crankshaft directly drives the No.1 balance shaft.
- A scissors gear is used between the crankshaft and No.1 balance shaft to reduce gear noise.

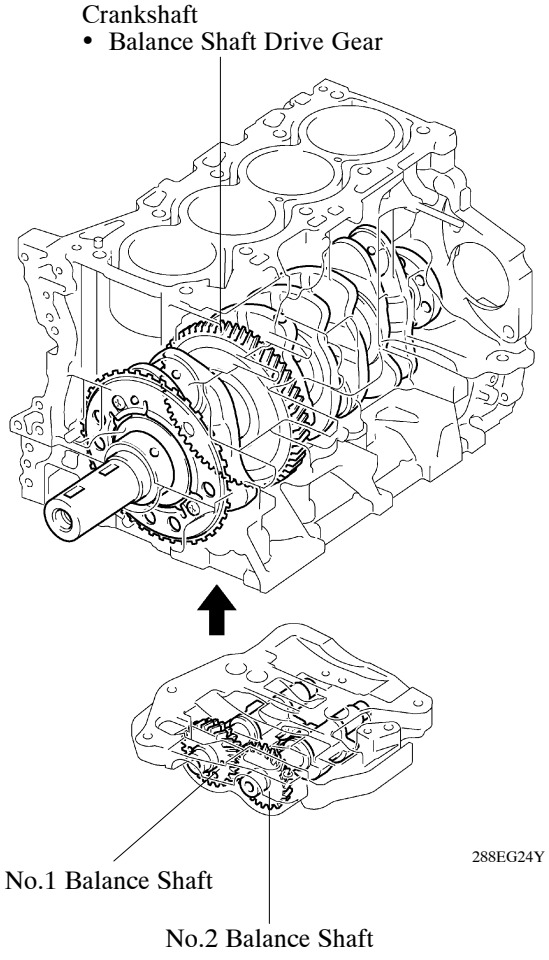

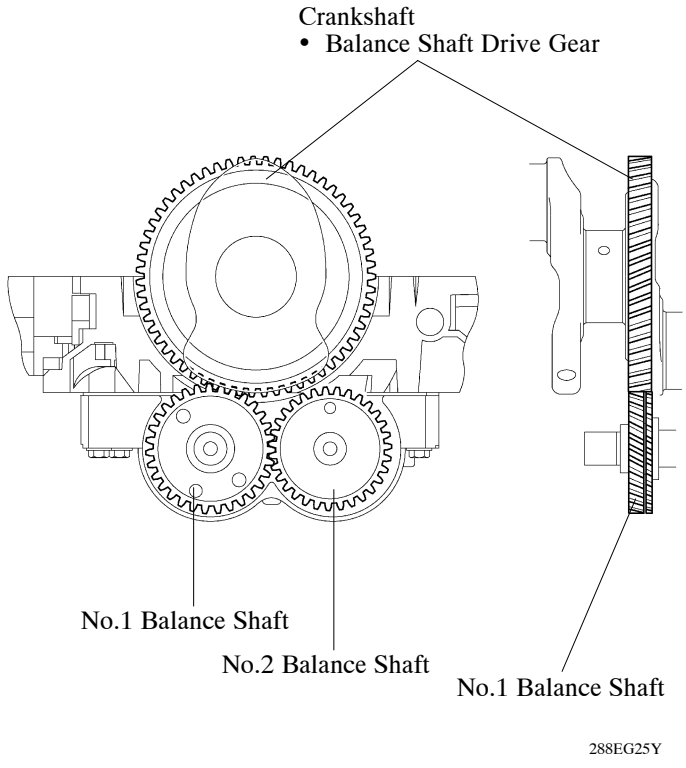

Operation

In the in-line 4-cylinder engine, the crankshaft angle for cylinders No.1 and No.4 are exactly at the opposite (180°) position of cylinders No.2 and No.3. Therefore, the inertial force of the pistons and the connecting rods of the former 2 cylinders and of the latter 2 cylinders almost cancel each other. However, because the position at which the piston reaches its maximum speed is located toward the top-dead-center from the center of the stroke, the upward inertial force is greater than the downward inertial force. This unbalanced secondary inertial force is generated at twice the crankshaft speed.

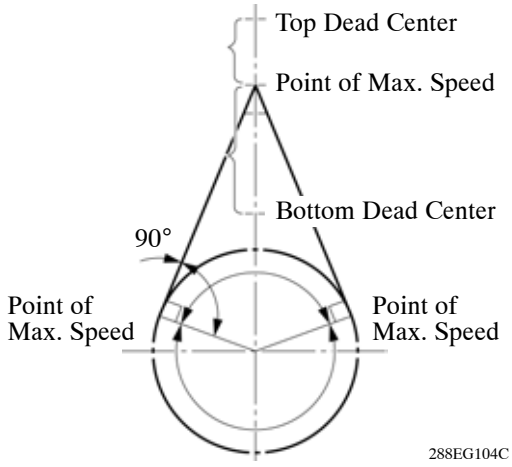

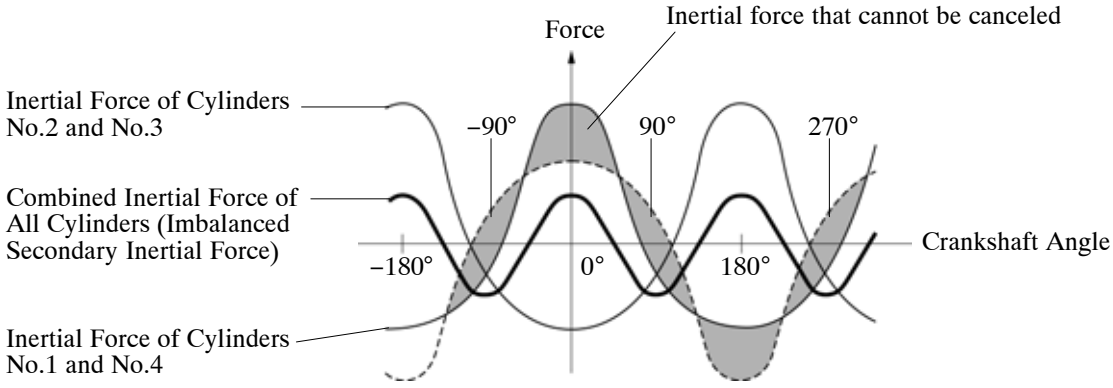

Inertial Force Generated by In-Line 4 Cylinders

288EG105C

To cancel the imbalanced secondary inertial force, 2 balance shafts are rotated at twice the crankshaft speed and generate inertial force in the opposite direction. Also, in order to cancel the inertial force generated by the balance shaft itself, the balance shaft actually consists of 2 shafts rotating in opposite directions.

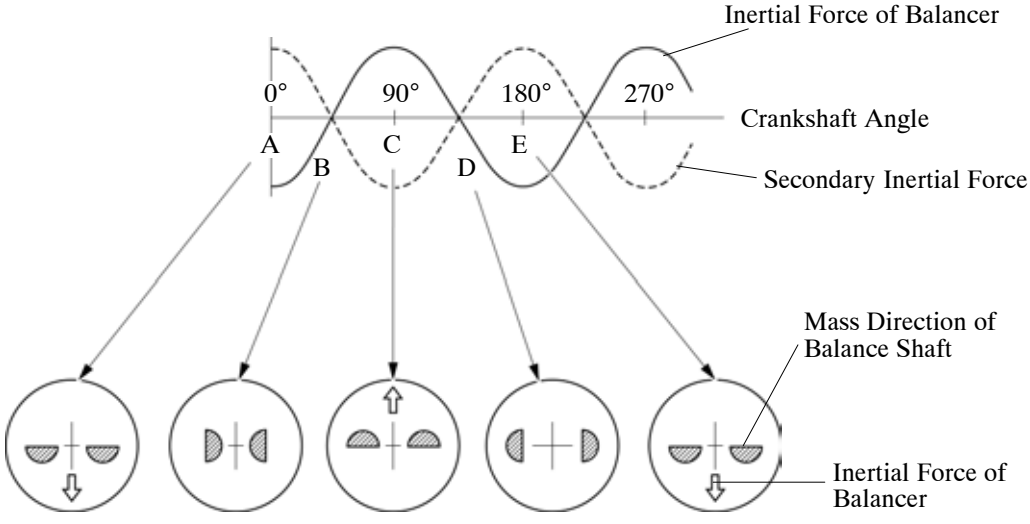

Mass Direction of Balance Shaft at Crankshaft Angle

288EG106C

NF

■VALVE MECHANISM

1. General

- Each cylinder of this engine has 2 intake valves and 2 exhaust valves. Intake and exhaust efficiency is increased due to the larger total port areas.
- This engine uses roller rocker arms with built-in needle bearings. This reduces the friction that occurs between the cams and the areas (roller rocker arms) that push the valves down, thus improving fuel economy.
- A hydraulic lash adjuster, which maintains a constant zero valve clearance through the use of oil pressure and spring force, is used.
- The exhaust camshaft is driven by a timing chain, while the intake camshaft is driven through gear on the exhaust camshaft.
- A supply pump is driven by exhaust camshaft to realize a lightweight and compact design.
- A vacuum pump is driven by intake camshaft to realize a lightweight and compact design.

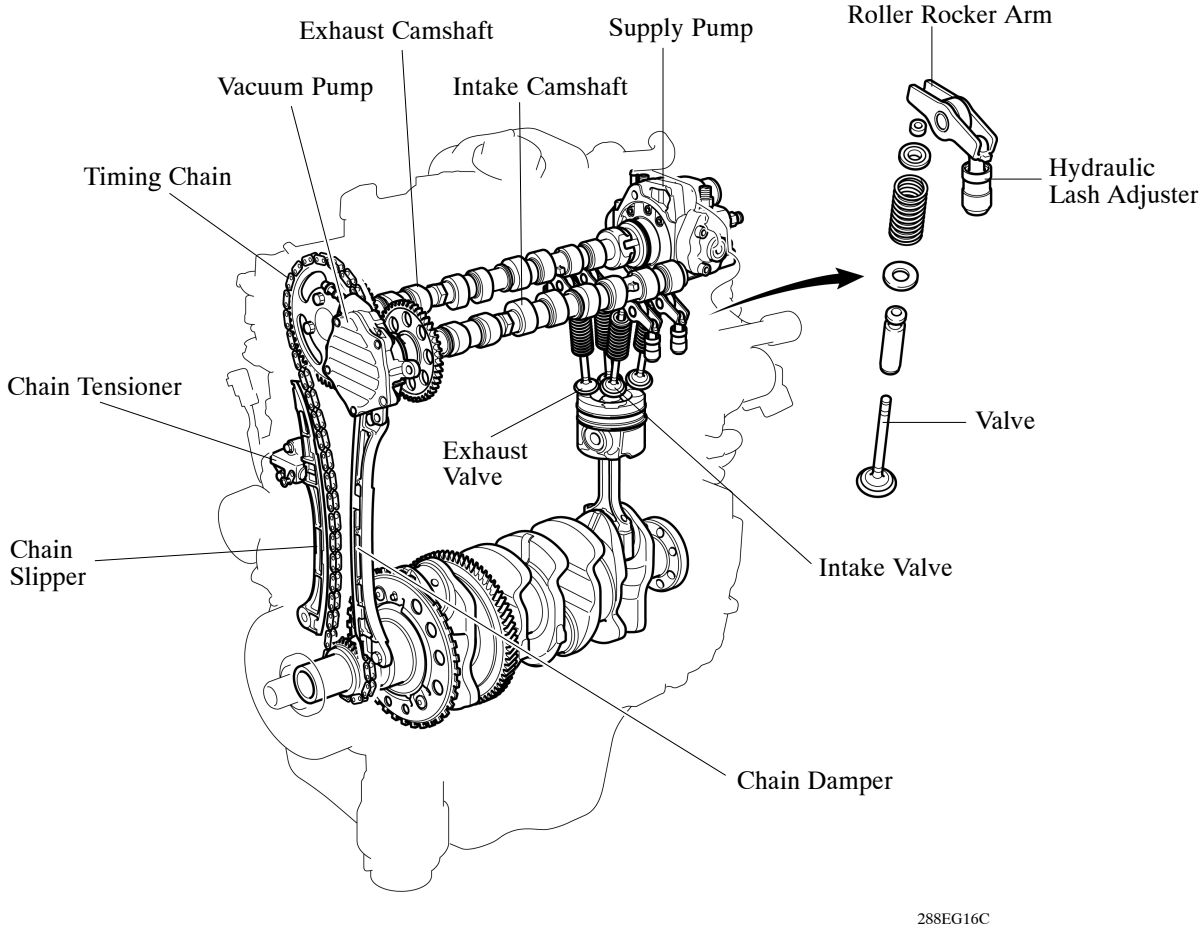

2. Timing Chain and Chain Tensioner

- A bushed chain with 9.525 mm (0.375 in.) pitch is used to make the engine more compact and maintenance-free operation.
- An oil jet lubricates the timing chain.
- The chain tensioner uses a spring and oil pressure to maintain proper chain tension at all times.
- The chain tensioner suppresses noise generated by the chain.
- A ratchet type with backlash mechanism is used.

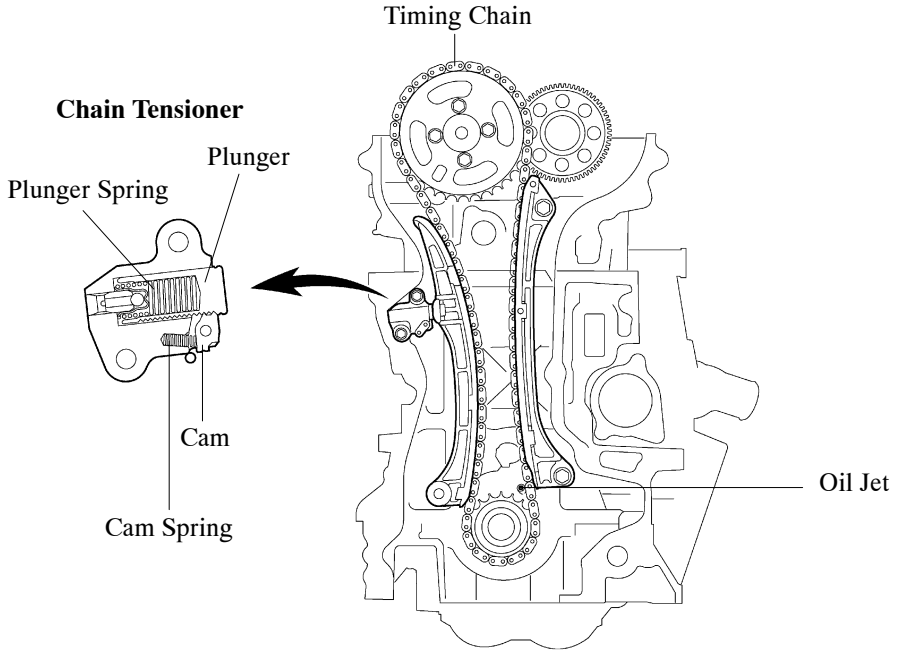

288EG26Y

3. Timing Chain Cover

- A single piece, aluminum diecast timing chain cover that entirely seals the front portion of the cylinder block and the cylinder head is used.
- The components listed below is integrated in the timing chain cover to reduce number of parts. (water pump swirl chamber, oil pump chamber, alternator bracket and chain tensioner service hole).

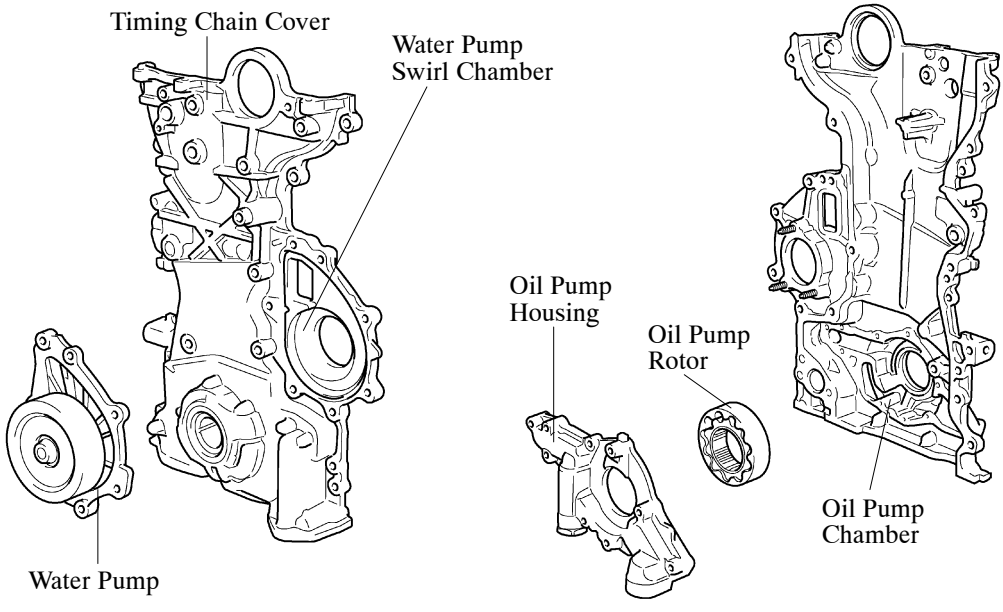

View from Front Side **View from Back Side**

288EG27Y

4. Hydraulic Lash Adjuster

- The hydraulic lash adjuster, which is located at the fulcrum of the roller rocker arm, consists primarily of a plunger, plunger spring, check ball, and check ball spring.
- The engine oil that is supplied by the cylinder head and the built-in spring actuate the hydraulic lash adjuster. The oil pressure and the spring force that act on the plunger push the roller rocker arm against the cam, in order to adjust the valve clearance that is created during the opening and closing of the valve. As a result, engine noise is reduced.

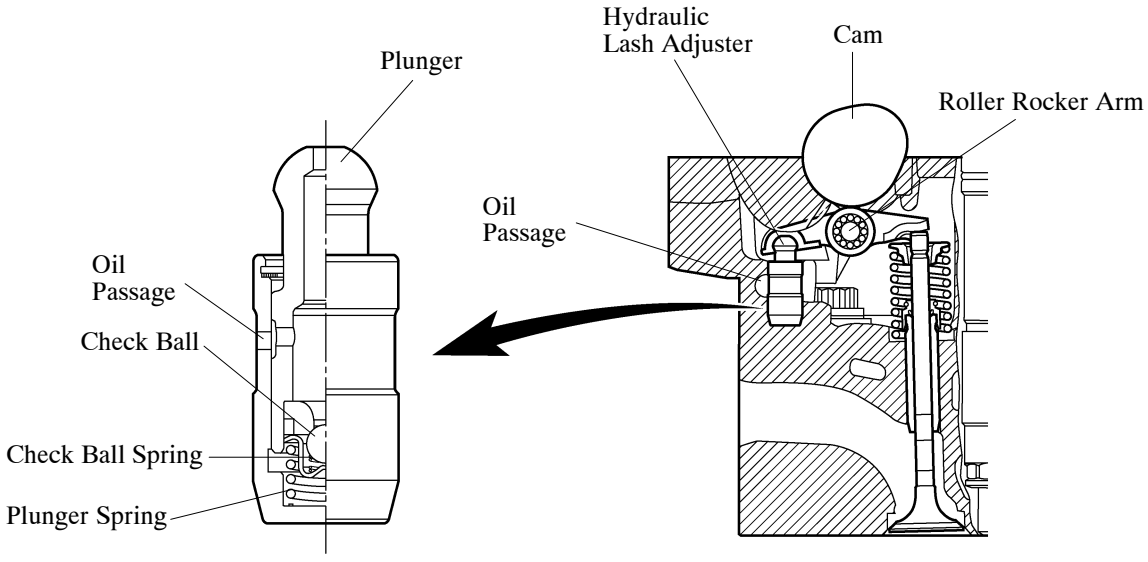

Service Tip

- Valve clearance adjustment is not necessary because a hydraulic lash adjuster is used.
- After reassembling the hydraulic lash adjuster, the fluid should be changed.

■LUBRICATION SYSTEM

1. General

- The lubrication circuit is fully pressurized and all oil passes through an oil filter.
- The trochoid gear type oil pump is driven directly by the crankshaft.
- The chamber for the oil pump rotor is placed in the timing chain cover to achieve a simpler construction and a compact engine.
- The water-cooled type engine oil cooler is used to lower the oil temperature.
- The resin oil strainer is used to reduce weight.
- Oil jets are provided for cooling the pistons.
- An oil level sensor is provided in the oil pan for efficient servicing.
- An oil filter with a replaceable element is used. For details of this filter, see page 33.

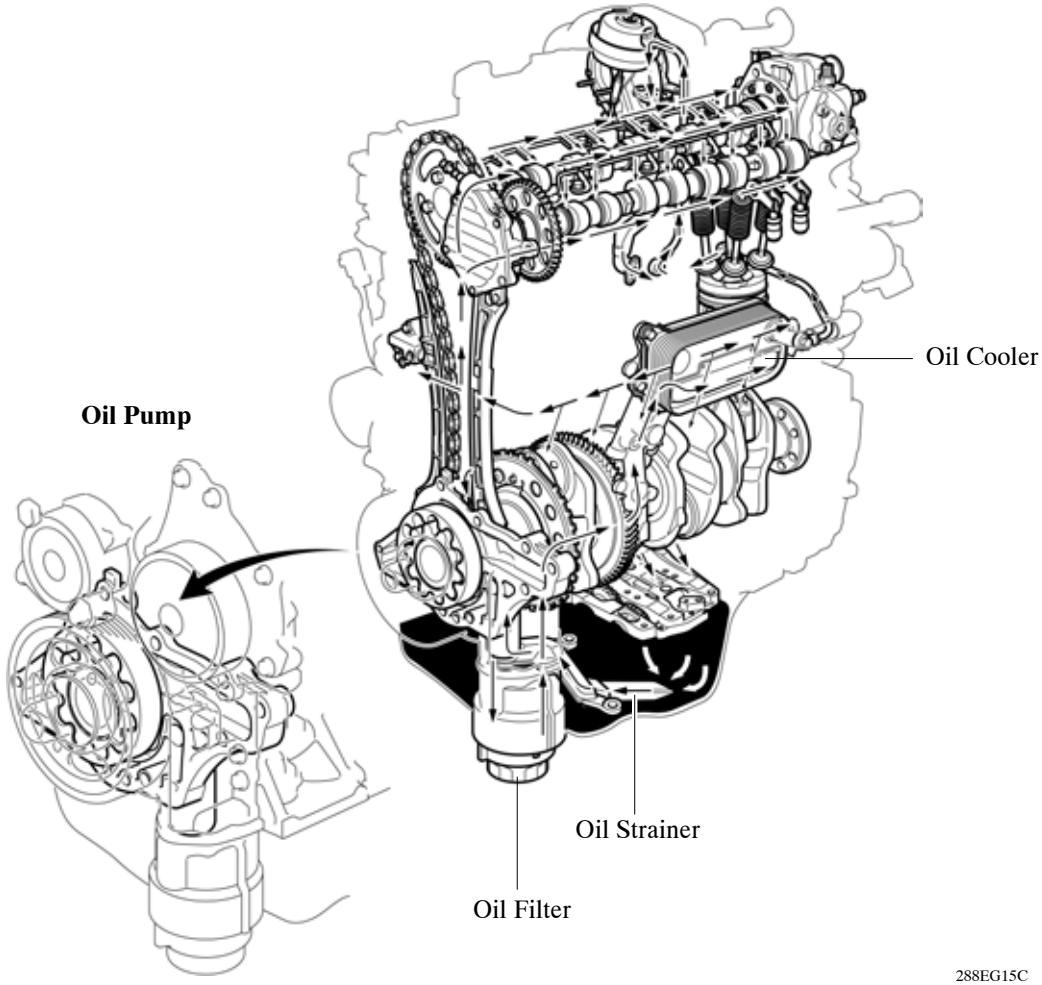

▶ Oil Circuit ◀

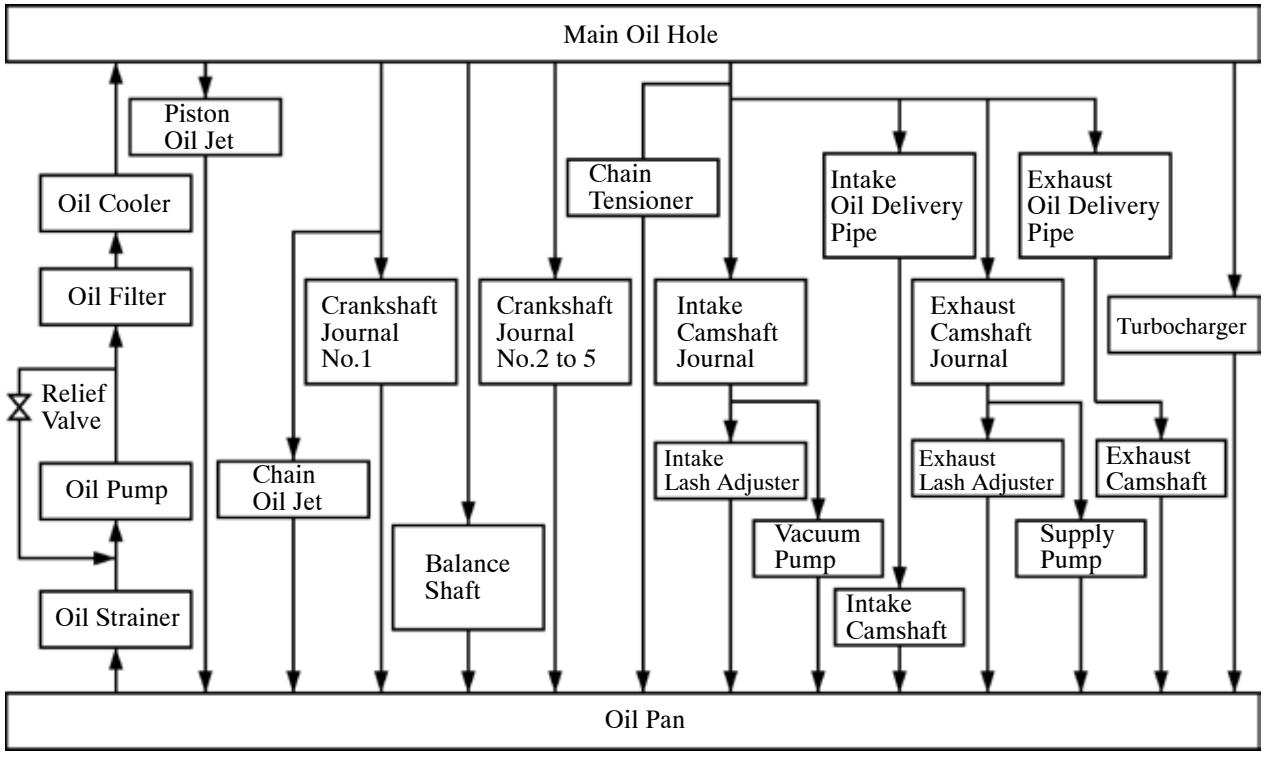

288EG29C

2. Oil Jet

Oil jets for cooling and lubricating the pistons are provided in the cylinder block.

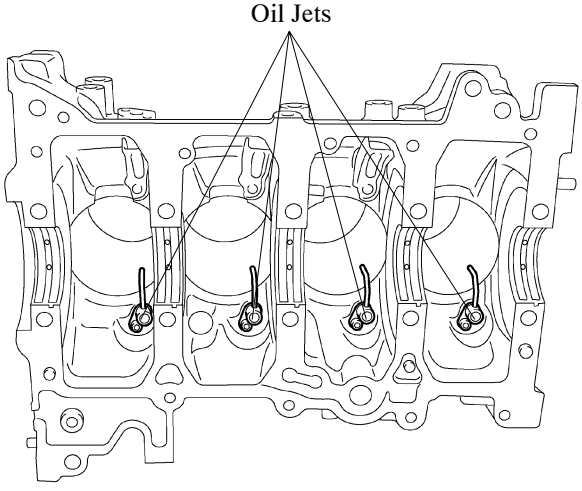

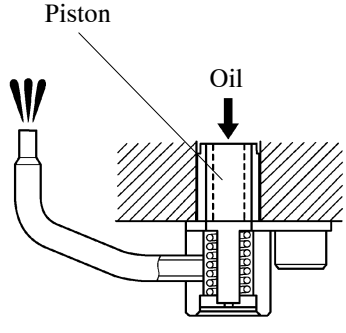

Oil Jet Cross Section

288EG30Y

3. Oil Filter

- A newly developed oil filter with a replaceable element is used. The element uses a high-performance filter paper to improve filtration performance. It is also combustible for environmental protection.
- An aluminum alloy filter cap is used to extend its life.
- This oil filter has a structure which can drain the oil remaining in the oil filter. This prevents oil from spattering when replacing the element and allows the technician to work without touching hot oil.

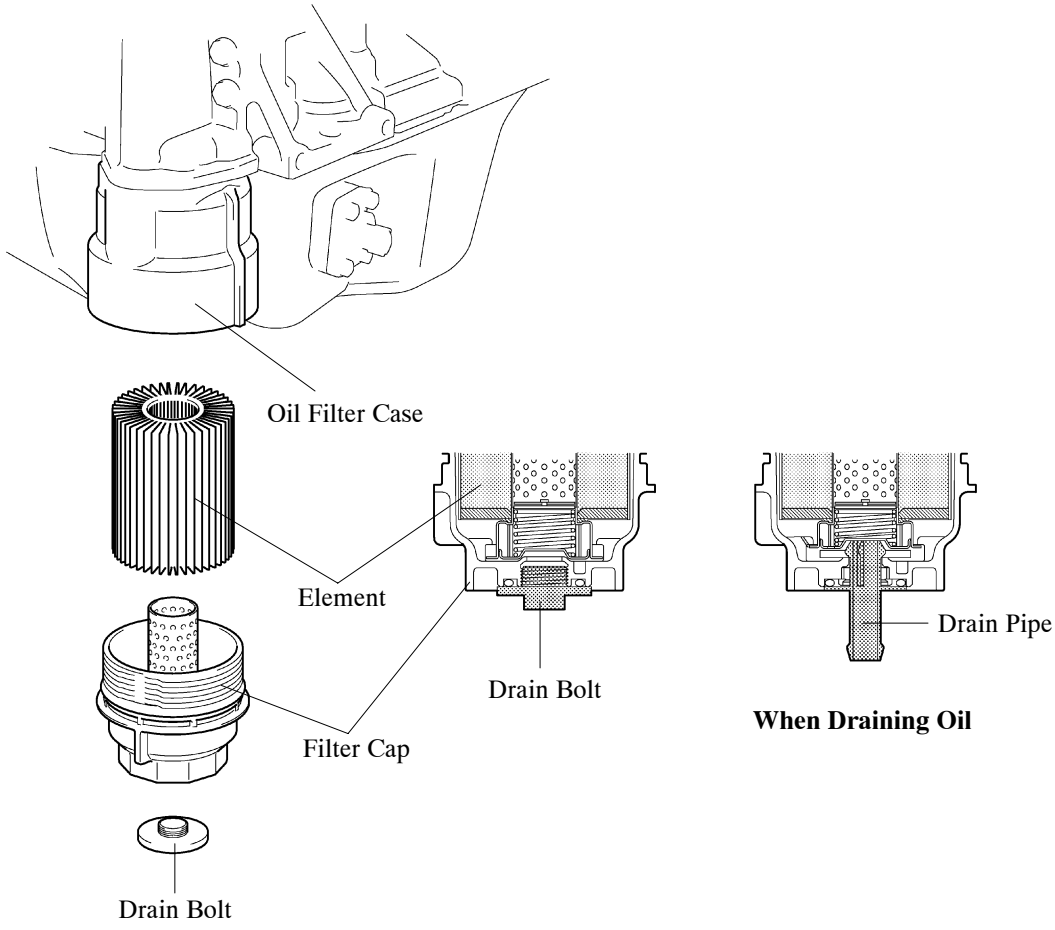

Service Tip

- The oil in the oil filter can be drained by removing the drain bolt and inserting the drain pipe supplied with the element into the oil filter. For details, see the Avensis Repair Manual Supplement (Pub. No. RM1174E).
- The engine oil maintenance interval for a model that has an oil filter with a replaceable element is the same as that for the conventional model.

■COOLING SYSTEM

1. General

- The cooling system is a pressurized, forced-circulation type.
- A thermostat with a bypass valve is located on the water inlet housing to maintain suitable temperature distribution in the cooling system. This prevents sudden jumps in temperature while the engine is warming up.
- A water pump swirl chamber is placed in the timing chain cover to achieve a simpler construction and a compact engine.
- An aluminum radiator core is used for weight reduction.
- A water-cooled oil cooler and a water-cooled EGR cooler are provided.
- The engine coolant uses TOYOTA genuine SLLC (Super Long Life Coolant).

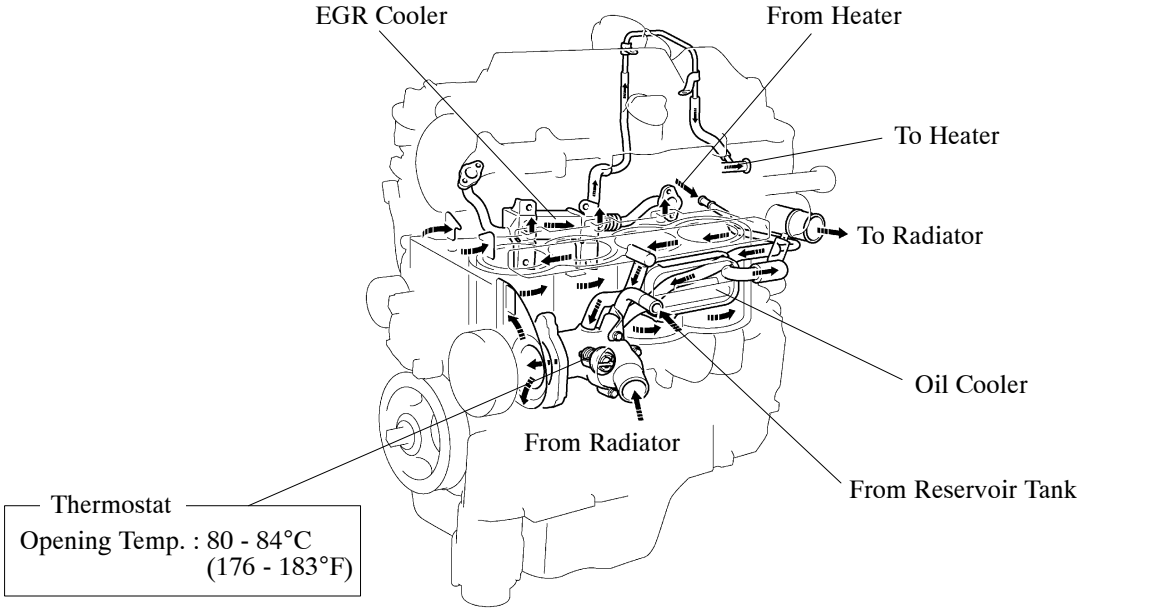

288EG17Y

▶ Water Circuit ◀

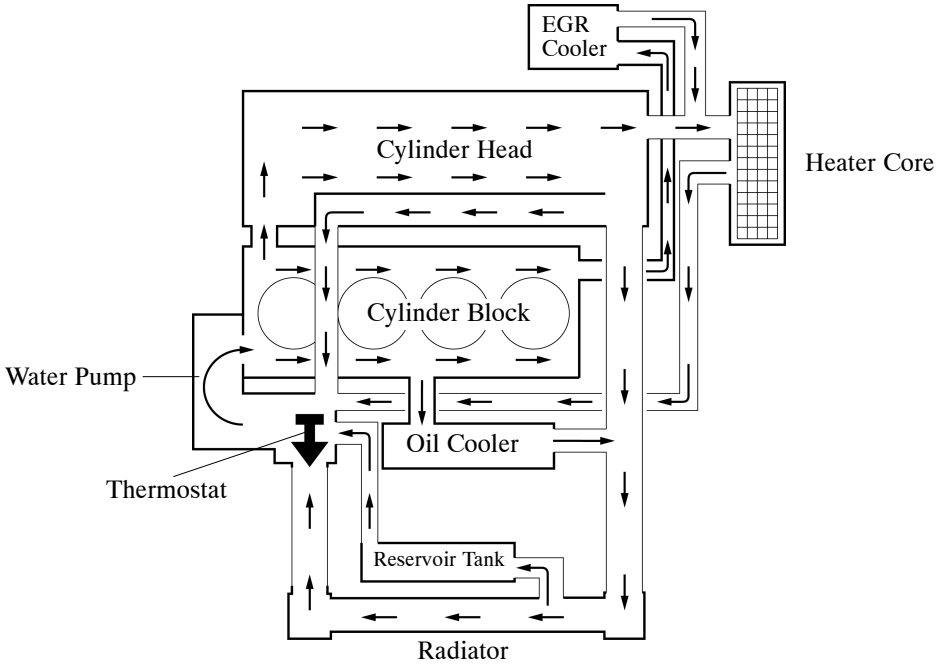

288EG32C

2. TOYOTA Genuine SLLC

TOYOTA genuine SLLC (Super Long Life Coolant) is used. Maintenance interval is as shown in the table below:

Type		TOYOTA Genuine SLLC
Maintenance Intervals	First Time	100,000 miles (160,000 km)
	Subsequent	Every 50,000 miles (80,000 km)
Color		Pink

- SLLC is pre-mixed (50% coolant and 50% deionized water), so no dilution is needed when adding or replacing SLLC in the vehicle.
- If LLC is mixed with SLLC, the interval for LLC (every 40,000 km/25,000 miles or 24 months whichever come first) should be used.
- You can also apply the new maintenance interval (every 50,000 miles/80,000 km) to vehicles initially filled with LLC (red-colored), if you use SLLC (pink-colored) for the engine coolant change.

■INTAKE AND EXHAUST SYSTEM

1. General

- An air-cooled intercooler is used in order to lower the intake air temperature, ensure high engine performance, and to realize cleaner exhaust gas emission.
- A link-less type throttle body in which the diesel throttle control motor and the throttle position sensor are integrated is used.
- A linear solenoid type EGR valve and a water-cooled EGR cooler are used to ensure high EGR performance.
- A variable nozzle vane type turbocharger is used.
- Oxidation catalytic converters are used in the exhaust front pipe and the exhaust manifold converter to comply with the EURO IV regulations.
- Two ball joints are used to joint the exhaust manifold to the exhaust front pipe, and exhaust front pipe to exhaust tail pipe. As a result, a simple construction and reliability is realized.

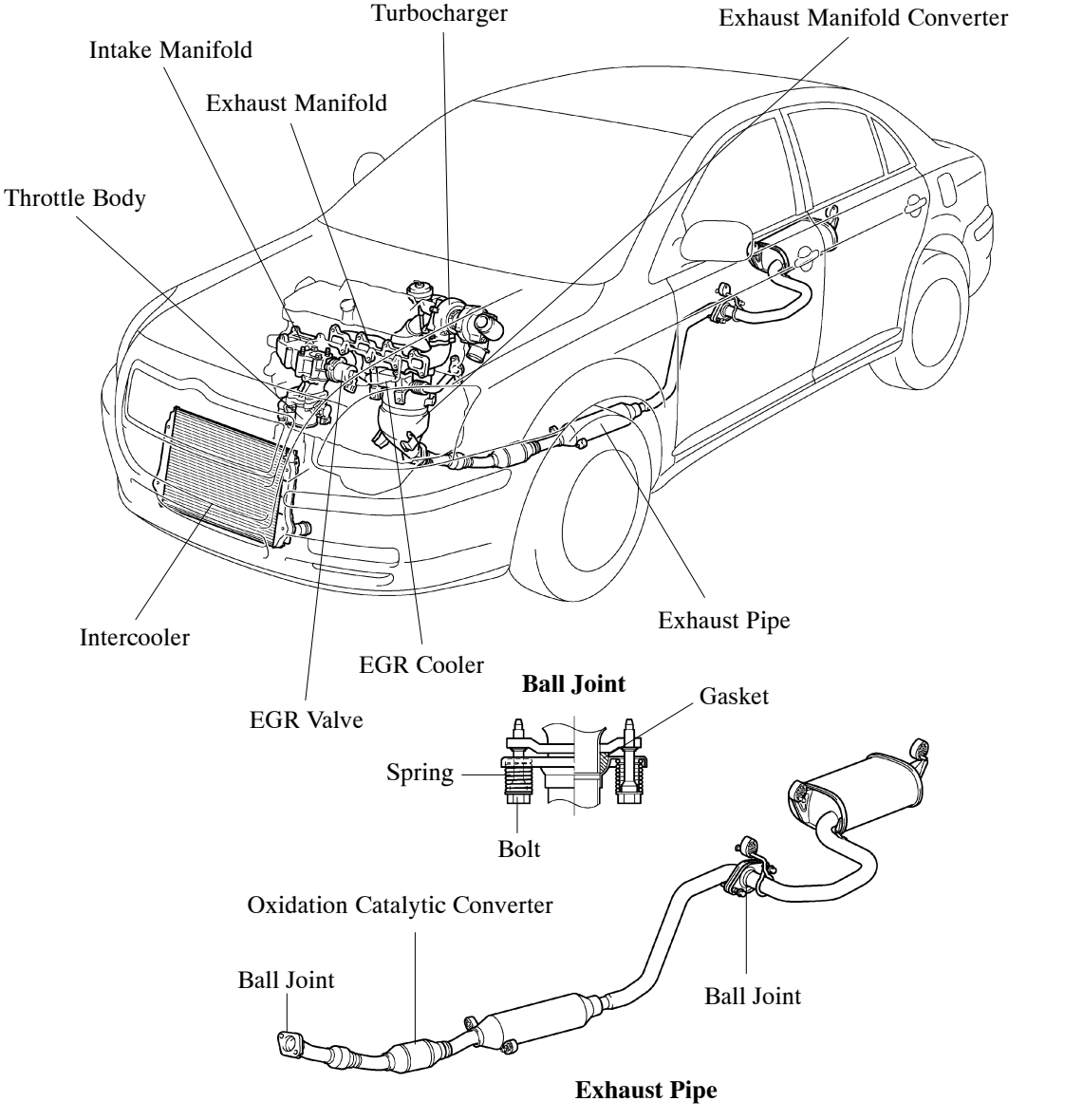

2. Throttle Body

A link-less type throttle body in which the diesel throttle control motor and the throttle position sensor are integrated is used.

- In the diesel throttle control motor, a rotary solenoid motor is used to control intake throttle.
- In the throttle position sensor, a non-contact type is used. For details, see page 61.

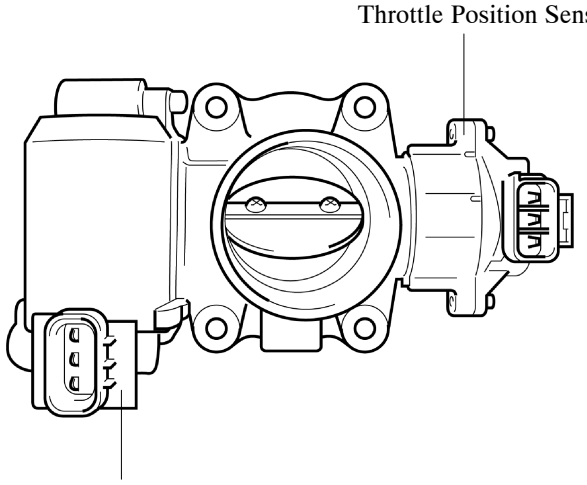

3. EGR Valve and EGR Cooler

- A linear solenoid type of EGR valve is used. Also, a dual-valve mechanism is used to cancel the effects of the exhaust pressure during actuation, in order to realize quick response.
- An EGR valve position sensor is provided in the EGR valve. This sensor enables EGR valve control at a higher level of precision by detecting the amount of lift of the EGR valve.
- The EGR cooler, water flows around the five-layered gas passage to cool down.

EGR Valve

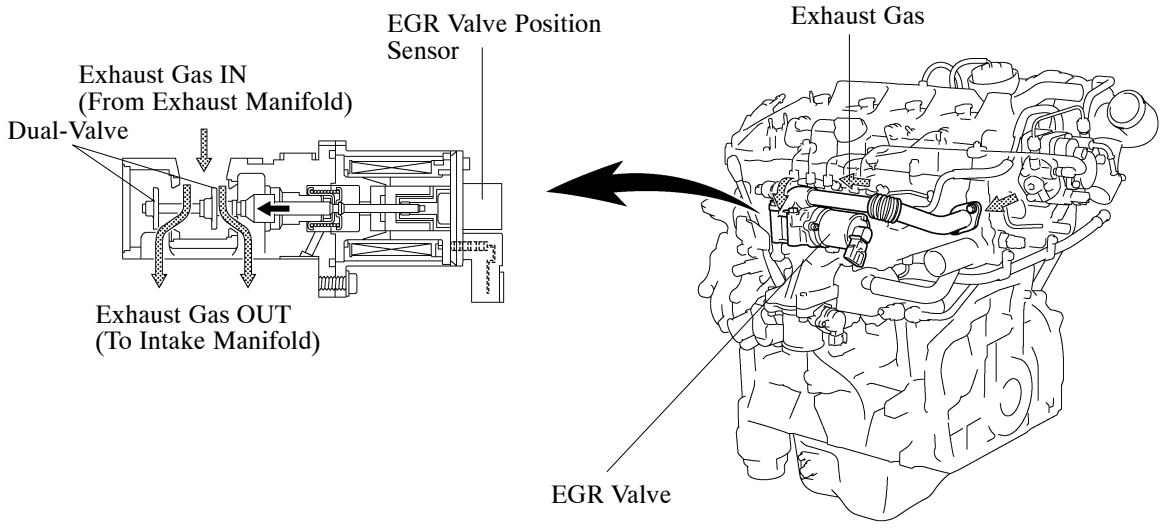

288EG97Y

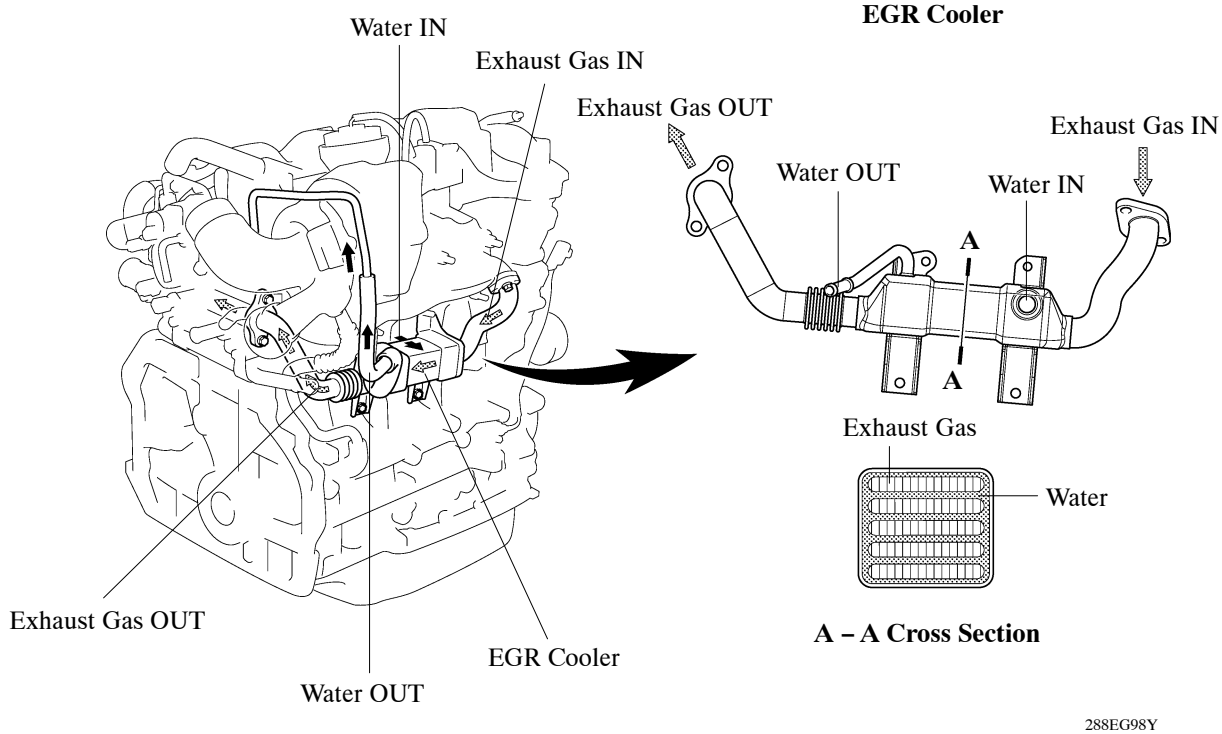

288EG98Y

4. Turbocharger

General

- The variable nozzle vane type turbocharger drives the vacuum type actuator according to engine condition, and controls the nozzle vane in order to realize high engine output, low fuel consumption and low emissions.
- The turbocharger is cooled by the engine oil.

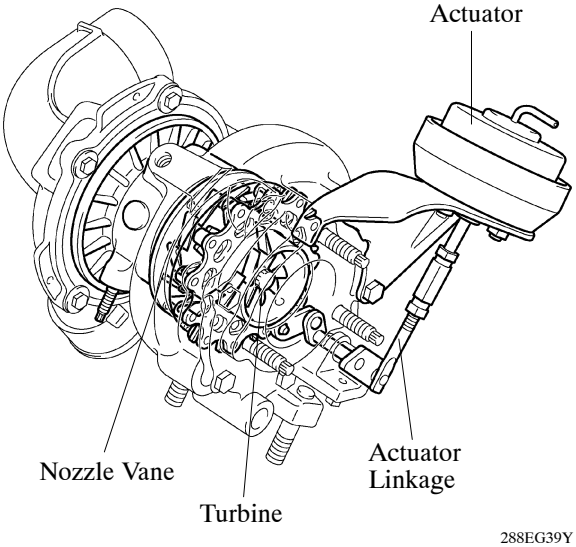

288EG39Y

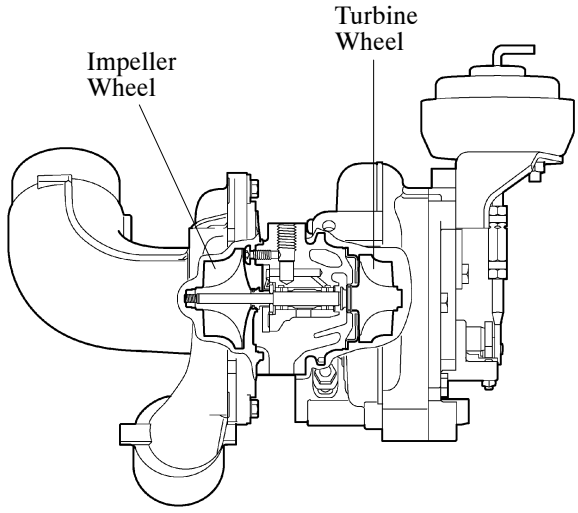

288EG40Y

- The exhaust gas from the exhaust manifold goes through the nozzle vane inside the turbocharger housing, and flows to the exhaust pipe through the turbine. The speed of the turbine (supercharging pressure) differs depending on the flow velocity of the exhaust gas going through the turbine and the flow velocity of the exhaust gas is controlled by the opening. In such a time like idling, the exhaust gas is less and the nozzle vane is fully closed, but as there is a slight clearance between the vanes, the exhaust gas flows through this clearance to the exhaust pipe. Therefore, there is no bypass.

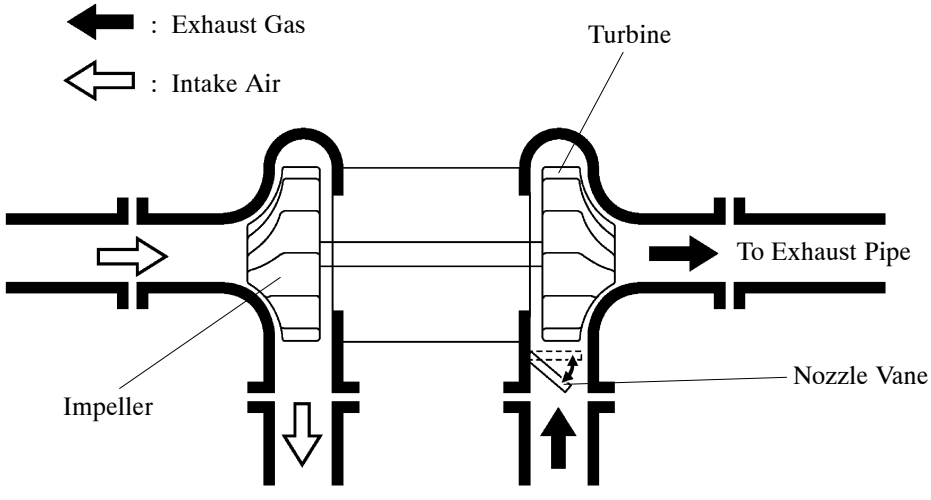

240EG129

Operation

1) At Low Load Range or Low Speed Range

When the engine is running in a low load range or a low speed range, the actuator pulls up the actuator linkage. The actuator linkage is connected to the unison ring. At the same time, the drive arms installed in the unison ring move to change the nozzle vane angle toward closing direction. As a result, the exhaust gas speed to the turbine increases, and the engine torque will be improved.

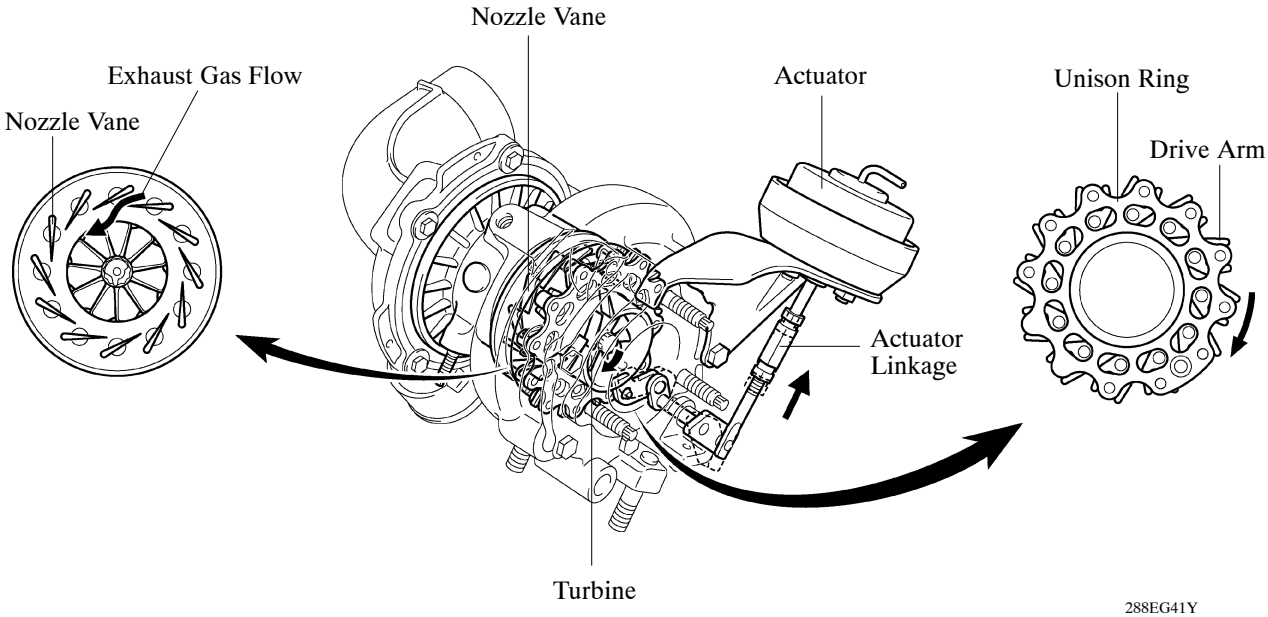

2) At High Load Range or High Speed Range

When the engine is running in a high load range or a high speed range, the actuator pull down the actuator linkage. With this, the drive arm moves and this opens the nozzle vane and holds the specified supercharging pressure. Thus, lowering the exhaust gas back pressure and improving the output and fuel consumption.

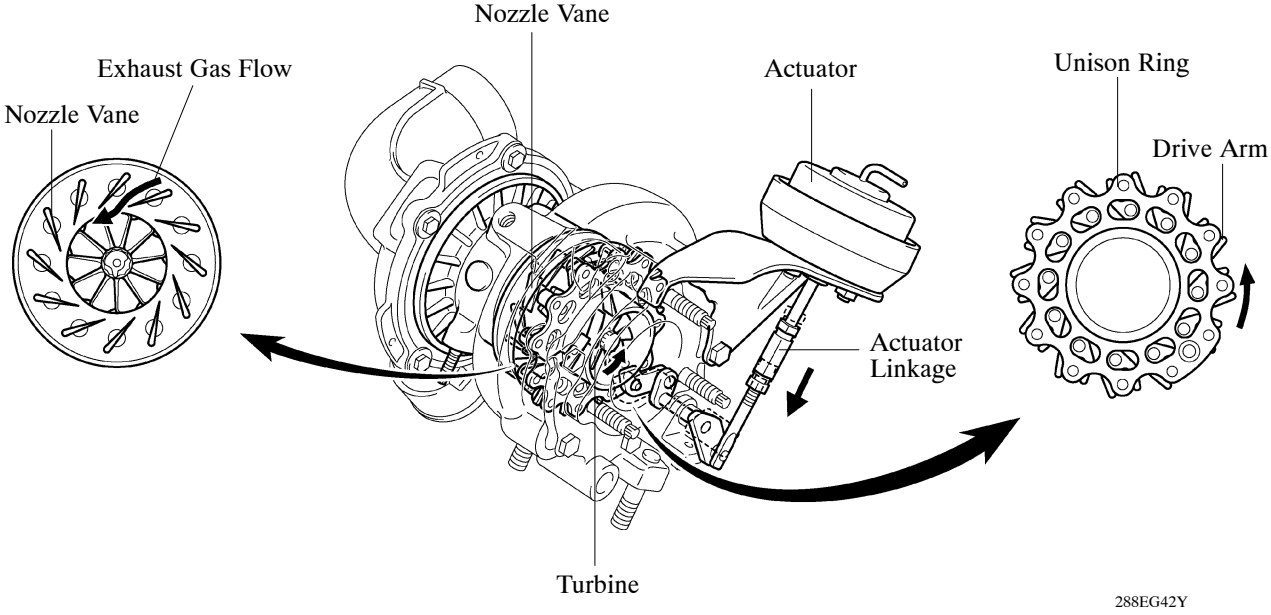

■FUEL SYSTEM

1. General

- A common-rail system is used in the fuel injection system.
- HP3 type supply pump, which is compact and lightweight, is used.
- An injector compensation value and a QR code are printed on the injector to realized high-precision control.
- A fuel cooler made of aluminum is used.
- A quick connector is used to connect the fuel pipe with the fuel hose for excellent serviceability.
- A fuel tank made of plastic is used.

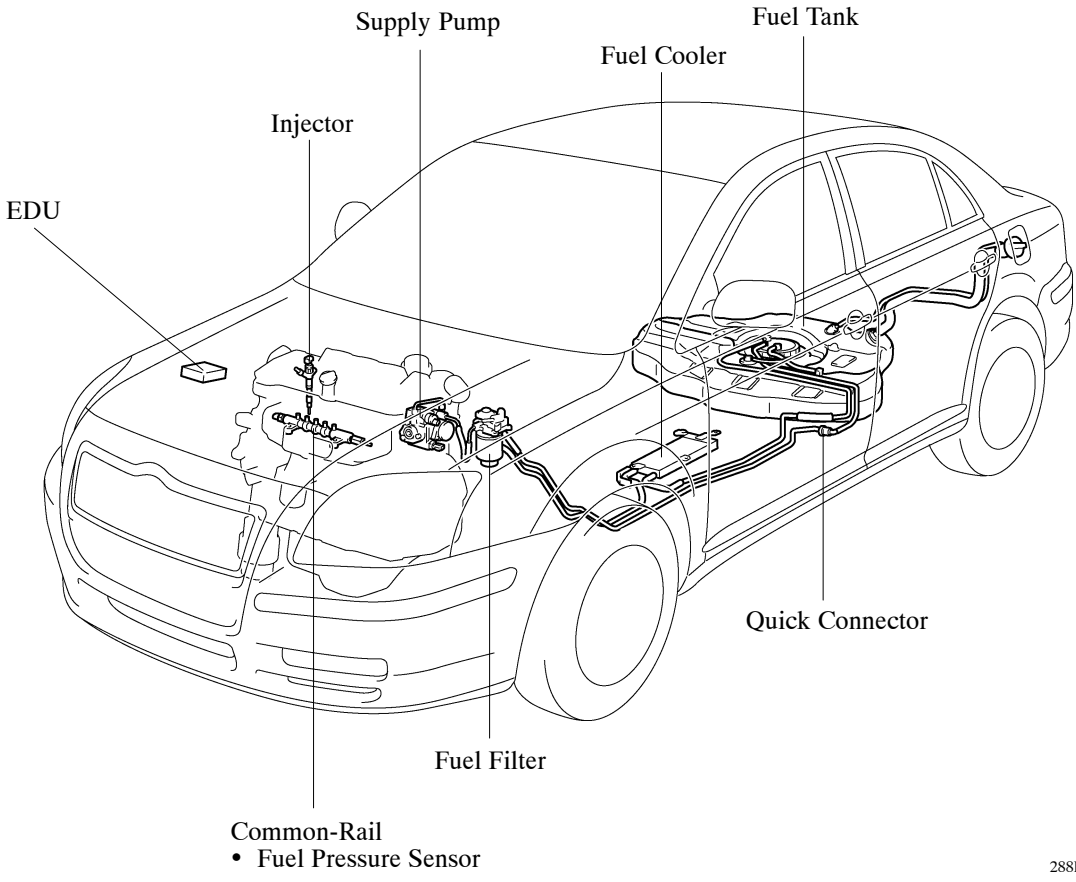

2. Common-Rail System

General

In this system, the high pressurized fuel that is supplied by the supply pump is stored in the common-rail, and the engine ECU sends signals to the injectors via the EDU (Electronic Driver Unit) in order to control the injection timing and injection volume. For details of this control, see page 62.

▶ System Diagram ◀

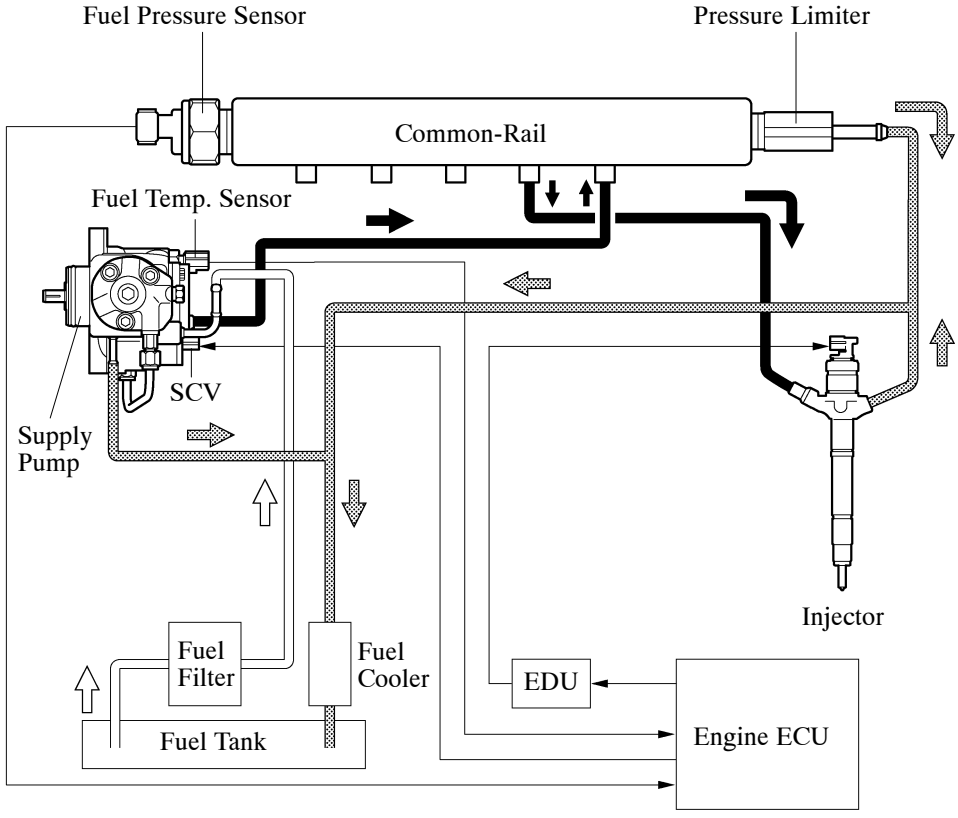

288EG43Y

Supply Pump

1) General

- The supply pump consists of an eccentric camshaft, ring cam, two plungers, four check valves, SCV (Suction Control Valve), fuel temperature sensor, and a feed pump.
- The two plungers are placed opposite each other outside of the ring cam.

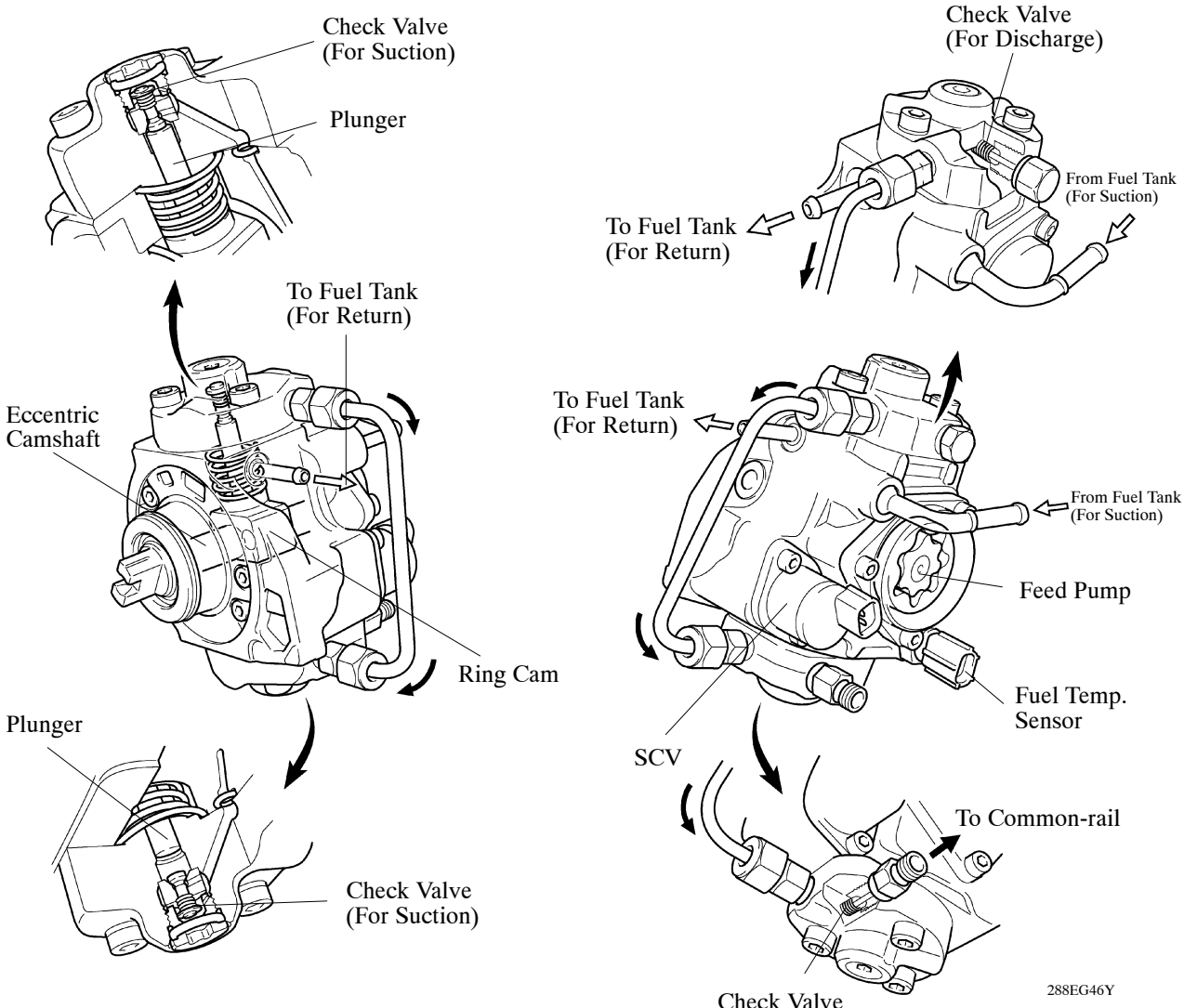

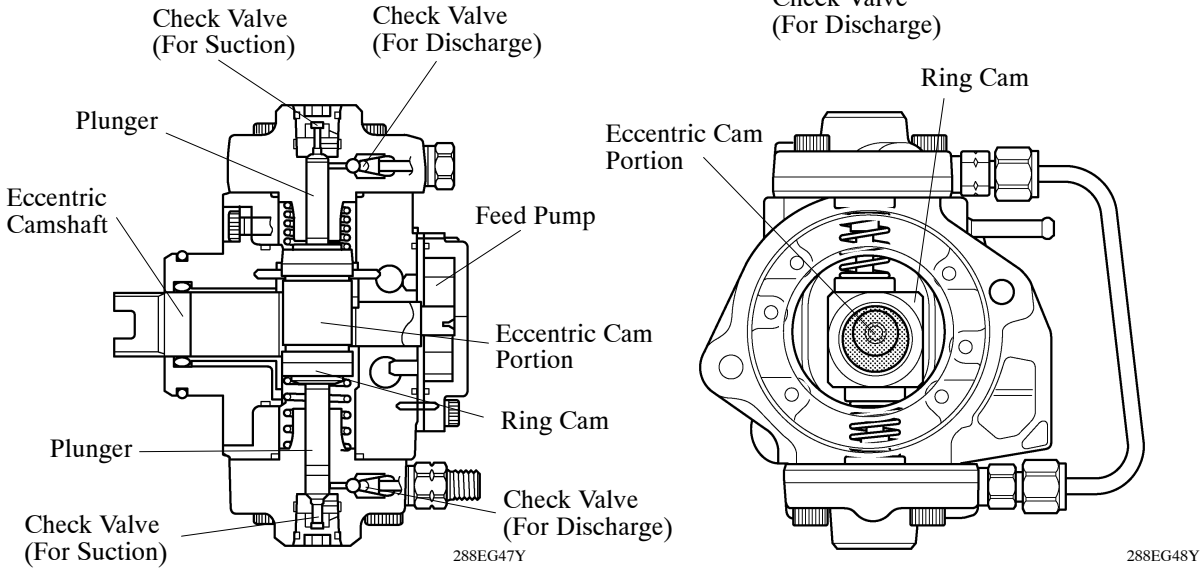

2) Operation

Due to the rotation of the eccentric cam, the ring cam pushes plunger A upward as illustrated below. The force of the spring pulls plunger B (which is located opposite plunger A) upward. As a result, plunger B draws fuel in, and plunger A pumps fuel at the same time.

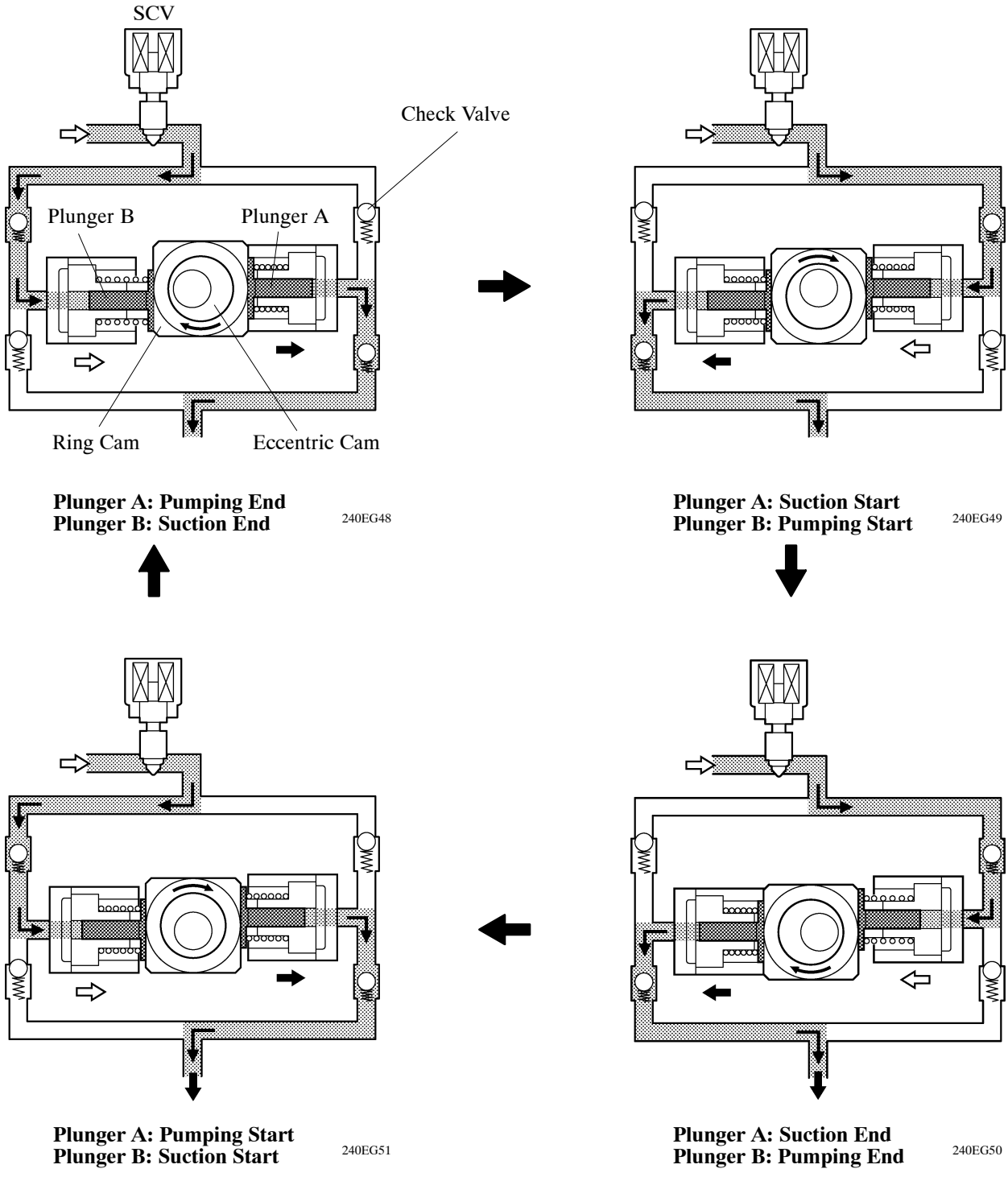

Common-Rail

- The function of the common-rail is to store the fuel that has been pressurized by the supply pump. The common-rail is provided with a fuel pressure sensor, which detects the fuel pressure in the common-rail, and a pressure limiter that mechanically relieves the pressure in case the internal pressure of the common-rail rises abnormally.
- Internally, the common-rail contains a main hole and five branch holes that intersect the main hole. Each branch hole functions as an orifice that dampens the fluctuation of the fuel pressure.
- The fuel pressure sensor outputs a signal that represents the fuel pressure in the common-rail to the engine ECU in order to constantly regulate the fuel at an optimal pressure.

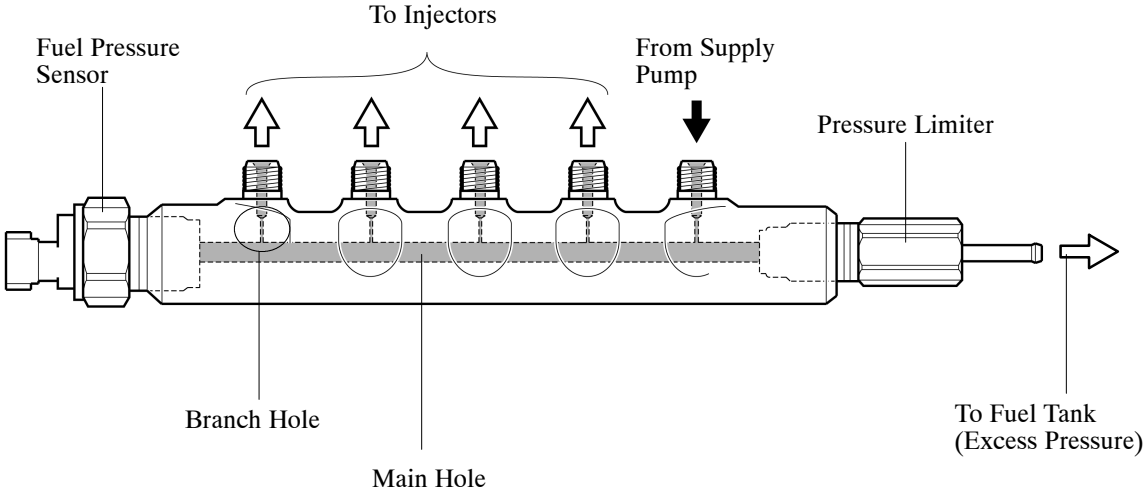

Service Tip

- Fuel pressure sensor has its sealing portion plastic-deformed in order to keep sealing performance, so do not reuse it after disassembling.
- The fuel pressure sensor and pressure limiter are supplied as a set with the common-rail.
- Do not disassemble the pressure limiter.
- If parts that affect the alignment have been changed, make sure to replace the pipe with a new one as well. The parts that require the replacement of a pipe are listed below.
  Injection Pipe: Injector, Common-rail, Cylinder Head and Intake Manifold
  Fuel Inlet Pipe: Supply Pump, Common-rail, Cylinder Head and Intake Manifold

For details, see the Avensis Repair Manual Supplement (Pub. No. RM1174E).

Injector

1) General

- An injector consists of a nozzle needle, piston, and solenoid valve.
- An injector compensation value and QR (Quick Response) code containing encoded characteristics of the injector are printed on each injector.
- The injector compensation value and QR code contain various pieces of information regarding the injector, such as model code, and injection volume correction.

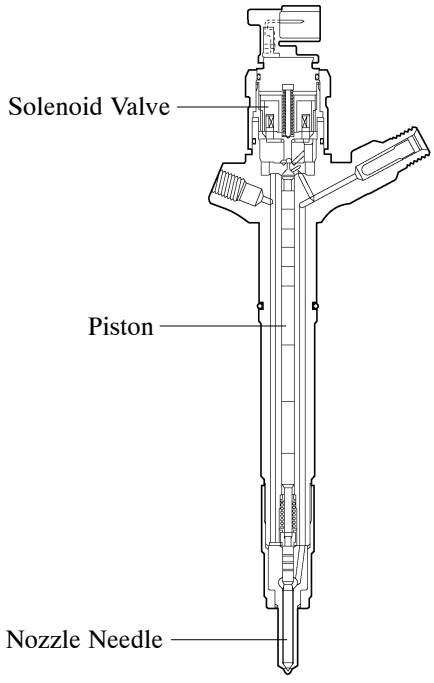

288EG50Y

Service Tip

- If the engine ECU is replace, use the intelligent tester II and input the injector compensation values of all 4 injectors. If one of the injectors is replaced, input the injector compensation value of the replaced injector. Then, the proper compensation will be made so that the injection volume precision prior to the replacement will remain unchanged. For details, see the Avensis Repair Manual Supplement (Pub. No. RM1174E).
- The QR code, which requires a special scan tool, is not used at Toyota dealers.

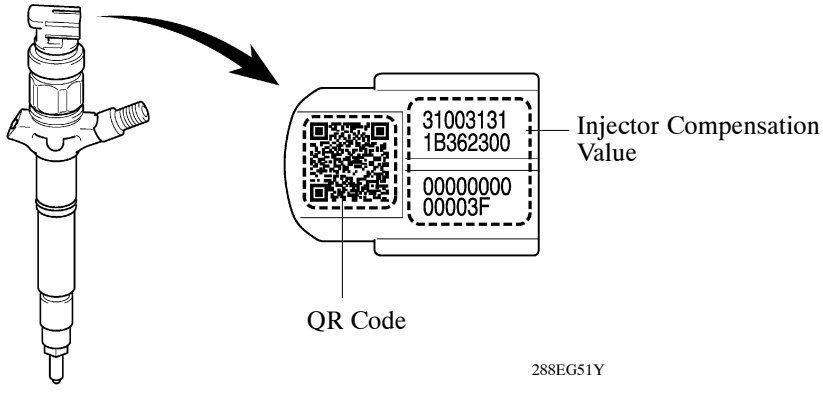

288EG51Y

— REFERENCE —

What is QR (Quick Response) Code?

- *QR code, a matrix symbology consisting of an array of nominally square cells, allows omni-directional, high-speed reading of large amounts of data.*
- *QR code encodes many types of date such as numeric, alphanumeric, kanji, kana and binary code. A maximum of 7,089 characters (numeric) can be encoded.*
- *QR code (2D code) contains information in the vertical and horizontal direction, whereas a bar code contains date in one direction only. QR code (2D code) holds a considerably greater volume of information than a bar code.*

2) Operation

(a) When electrical current is applied to the solenoid coil, it pulls the solenoid valve up.
(b) The orifice of the control chamber opens, allowing the fuel to flow out.
(c) The fuel pressure in the control chamber drops.
(d) Simultaneously, fuel flows from the orifice to the bottom of the piston and raises the piston up (to enhance response).
(e) As a result, the piston raises the nozzle needle to inject fuel.

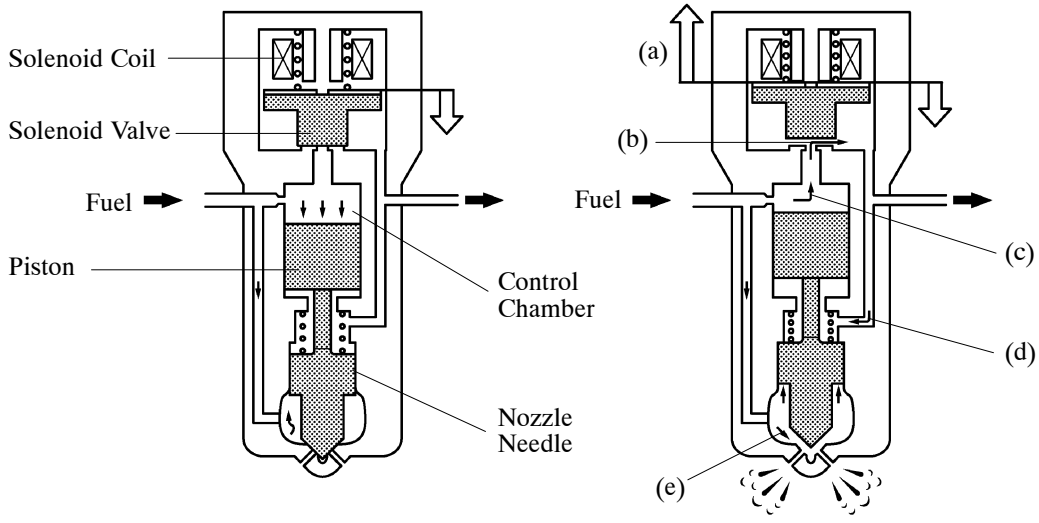

271EG127

3. Fuel Cooler

The fuel cooler, which is provided in the fuel return path, cools the return fuel that has reached a high temperature as a result of the pumping of the supply pump. This prevents the reduction in fuel viscosity that is caused by the rise in fuel temperature, and improves the reliability of the fuel system.

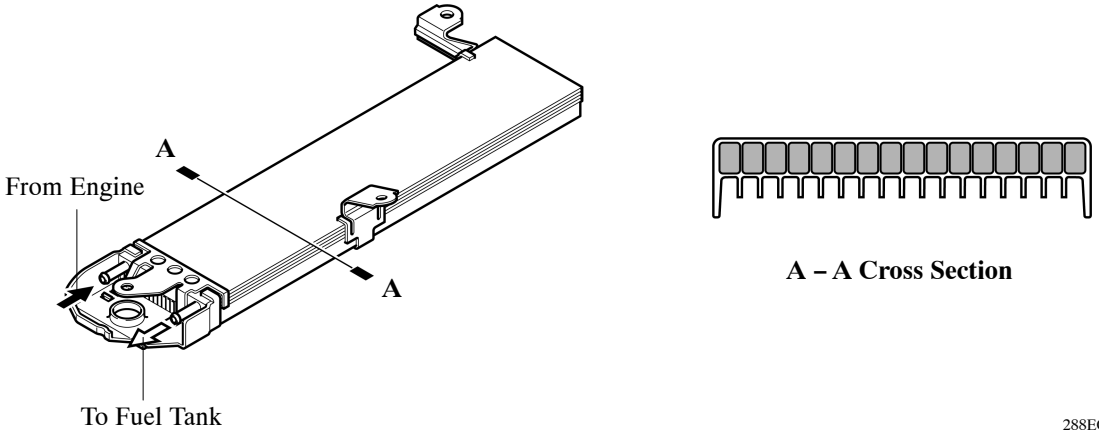

288EG52C

■CHARGING SYSTEM

1. General

- Instead of the conventional type alternator, a compact and lightweight segment conductor type alternator is used. This type of alternator generates a high amperage output in a highly efficient manner.
- This alternator uses a joined segment conductor system, in which multiple segment conductors are welded together to the stator. Compared to the conventional winding system, the electrical resistance is reduced due to the shape of the segment conductors, and their arrangement helps to make the alternator more compact.
- The charging control system, which controls the voltage generated by the alternator according to the vehicle driving conditions, is used to improve fuel consumption. For details, see page 63.

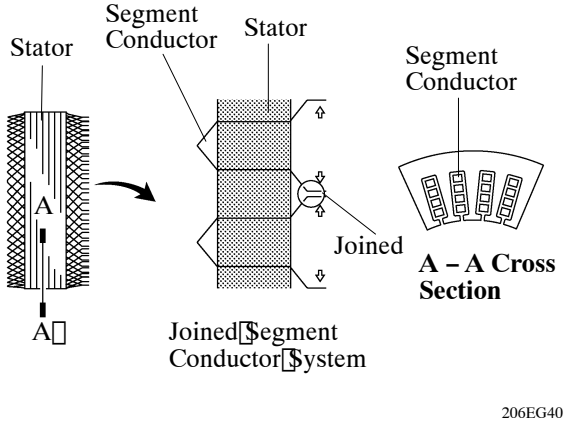

Segment Conductor Type Alternator

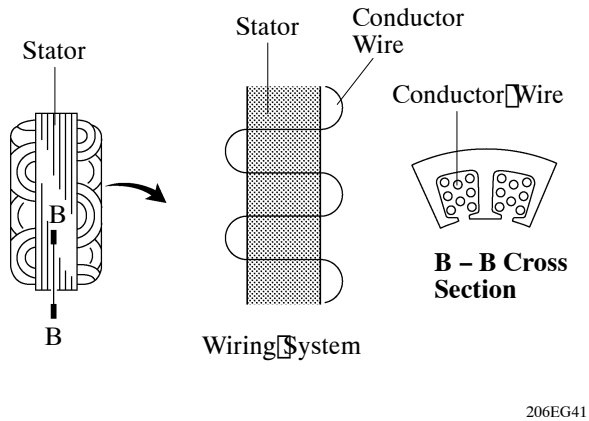

Conventional Type Alternator

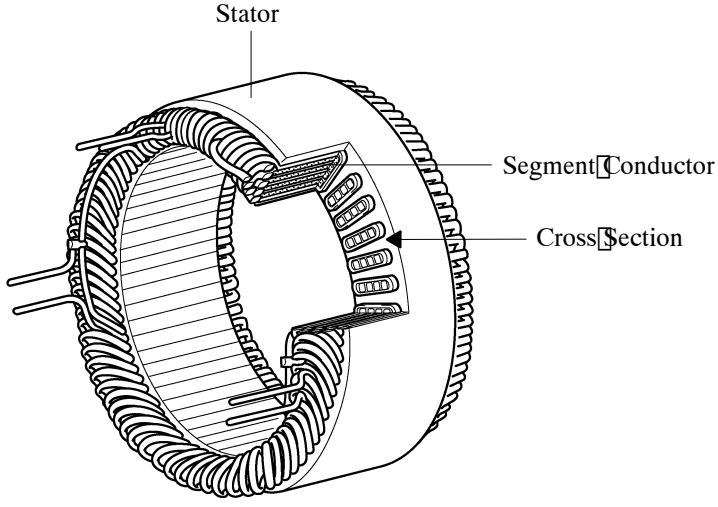

Stator of Segment Conductor Type Alternator

▶ Specifications ◀

Type	SE0
Rated Voltage	12V
Output Rated	100 A

▶ Wiring Diagram ◀

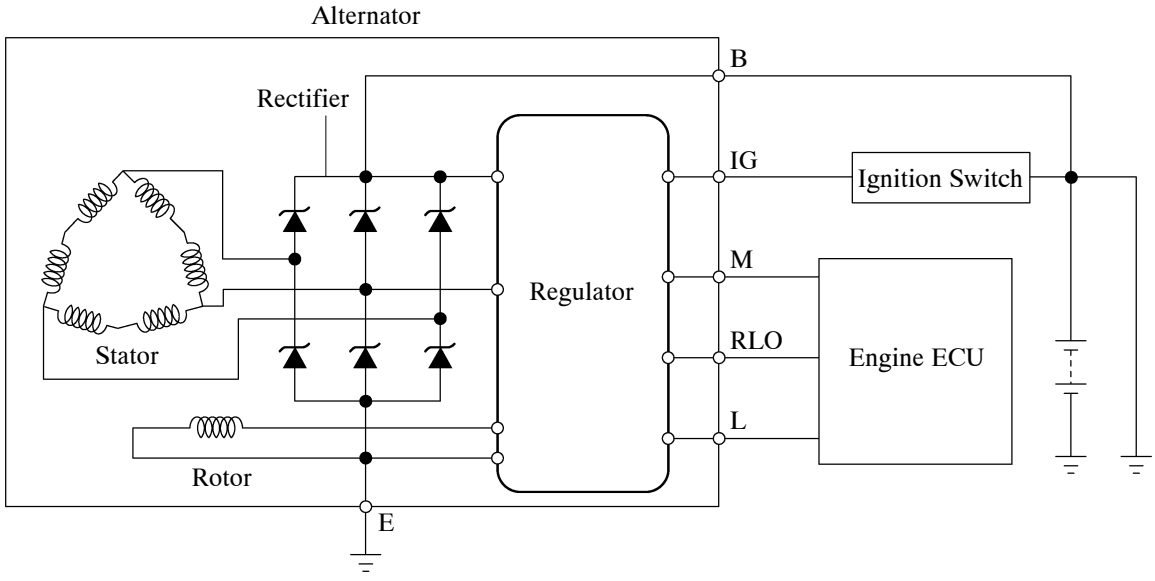

288EG53Y

2. Alternator Pulley

A one-way clutch is set to the alternator pulley. Operation of the one-way clutch cancels alternator pulley inertia and helps to prevent slipping of the V-ribbed belt. This realizes a low tension V-ribbed belt that achieves reduced friction.

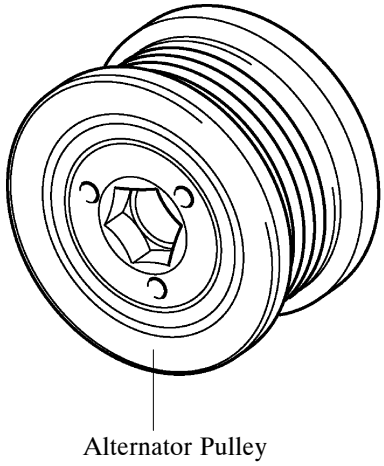

288EG54Y

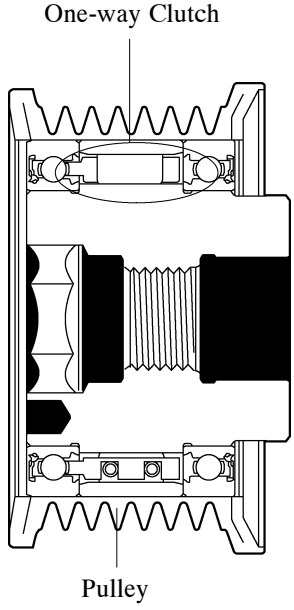

288EG55Y

NF

■SERPENTINE BELT DRIVE SYSTEM

- Accessory components are driven by a serpentine belt consisting of a single V-ribbed belt. It reduces the overall engine length, weight and number of engine parts.
- An automatic tensioner eliminates the need for tension adjustment.

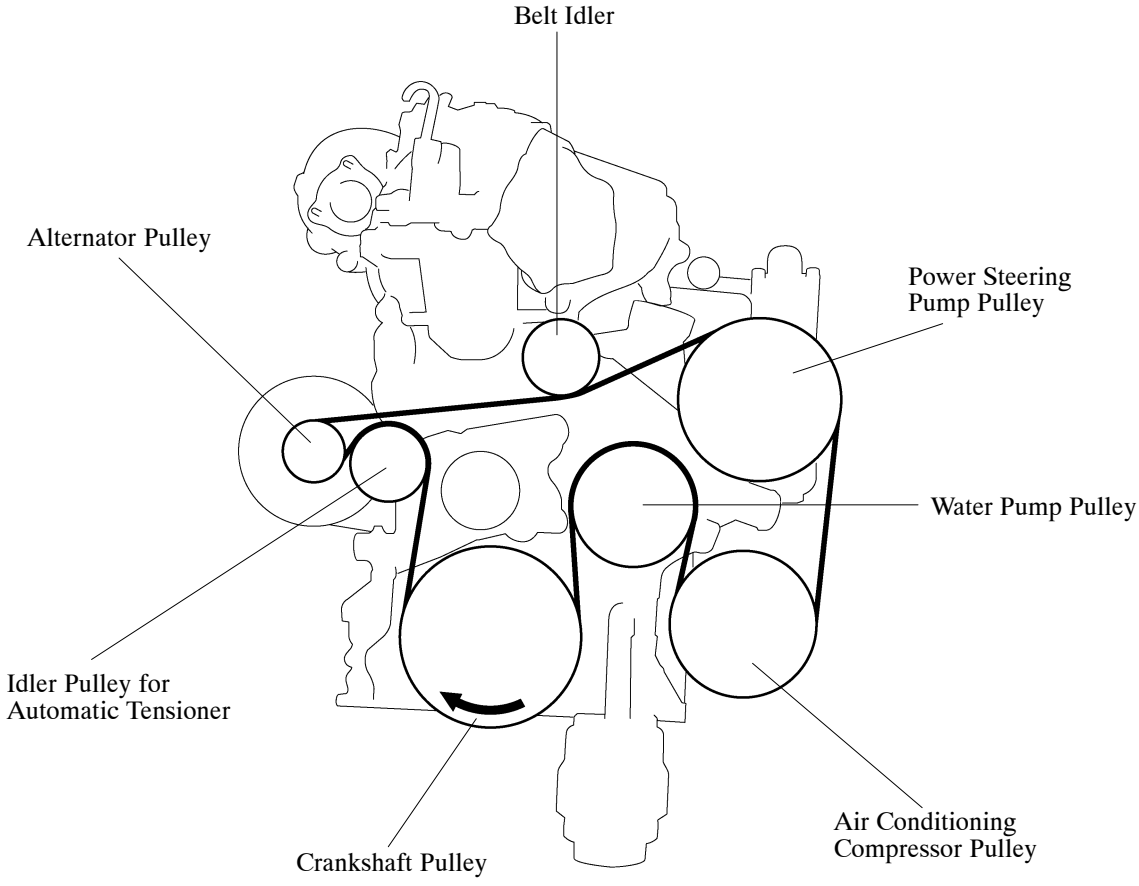

288EG56Y

■ENGINE CONTROL SYSTEM

1. General

The following list shows engine control comparison between 2AD-FTV engine and 1CD-FTV engine. The engine ECU that controls this system is made by DENSO.

System	Outline	2AD-FTV	1CD-FTV
Fuel Injection Volume Control	Based on the signals received from the sensors, the engine ECU determines the fuel injection volume in accordance with the engine condition.	○	○
Fuel Injection Timing Control	Based on the signals received from the sensors, the engine ECU determines the fuel injection timing in accordance with the engine condition.	○	○
Fuel Pressure Control (See page 62)	Based on the signals received from the sensors, the engine ECU controls fuel pressure using the SCV (Suction Control Valve) and pressure discharge valve according to engine conditions.	—	○
	Based on the signals received from the sensors, the engine ECU controls fuel pressure using the SCV according to engine conditions.	○	—
Pilot Injection Control	Based on the signals received from the various sensors, the engine ECU determines pilot injection volume, timing, and interval (between pilot injection and main injection) in accordance with the engine condition.	○	○
Idle Speed Control	The engine ECU determines the idle speed in accordance with the engine condition, and controls the fuel injection volume in order to maintain the target idle speed.	○	○
Glow Plug Control	Controls the length of time when the current is applied to the glow plugs, in accordance with water temperature.	○	○
EGR Control	Based on the signals received from the sensors, the engine ECU determines the EGR volume via EGR valve and diesel throttle control valve in accordance with the engine condition.	○	○
Turbo Pressure Control	Based on the signals received from the sensors, the engine ECU controls the actuator via VRV in accordance with the engine condition.	○	○
Intake Throttle Control	• Based on the signals received from the various sensors, the engine ECU determines throttle position in accordance with engine condition. • Fully close the diesel throttle control valve in order to reduce the vibration when the engine is stopped.	○	○
Charging Control (See page 63)	The engine ECU regulates the charging voltage of the alternator in accordance with the driving conditions and the charging state of the battery.	○	—
Air Conditioner Cut-off Control	By controlling the air conditioner compressor ON or OFF in accordance with the engine condition, drivability is maintained.	○	○

(Continued)

NF

System	Outline	2AD-FTV	1CD-FTV
Engine Immobilizer	Prohibits fuel injection if an attempt is made to start the engine with an invalid ignition key.	○	○
Oil Maintenance Management (See page 65)	When the engine ECU determines engine oil deterioration, the engine oil change reminder light turns on to inform the driver.	○	—
Diagnosis (See page 67)	When the engine ECU detects a malfunction, the engine ECU diagnoses and memorizes the failed section.	○	○
Fail-Safe (See page 67)	When the engine ECU detects a malfunction, the engine ECU stops or controls the engine according to the data already stored in the memory.	○	○

2. Construction

The configuration of the engine control system is as shown in the following chart.

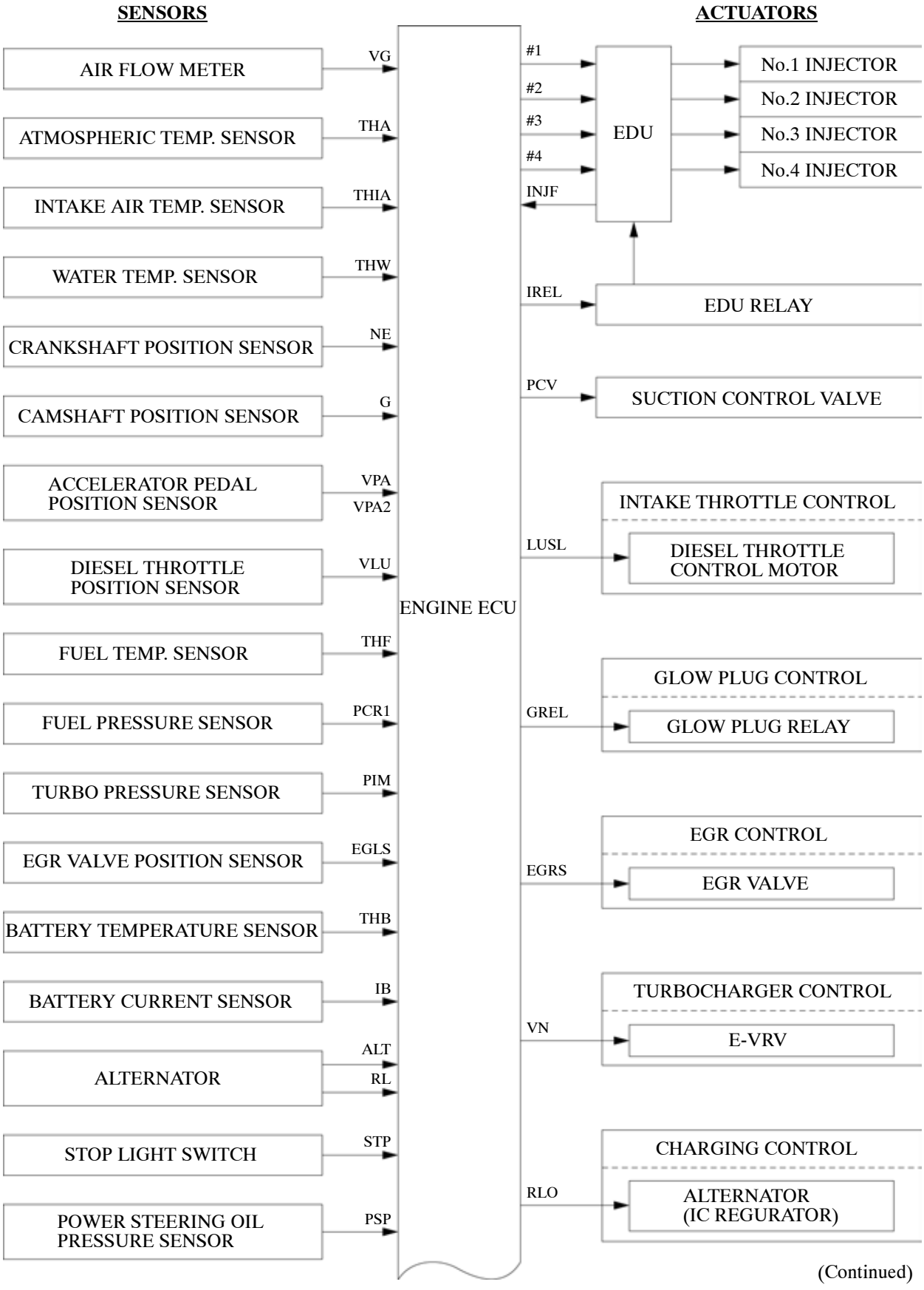

(Continued)

288EG90C

NF

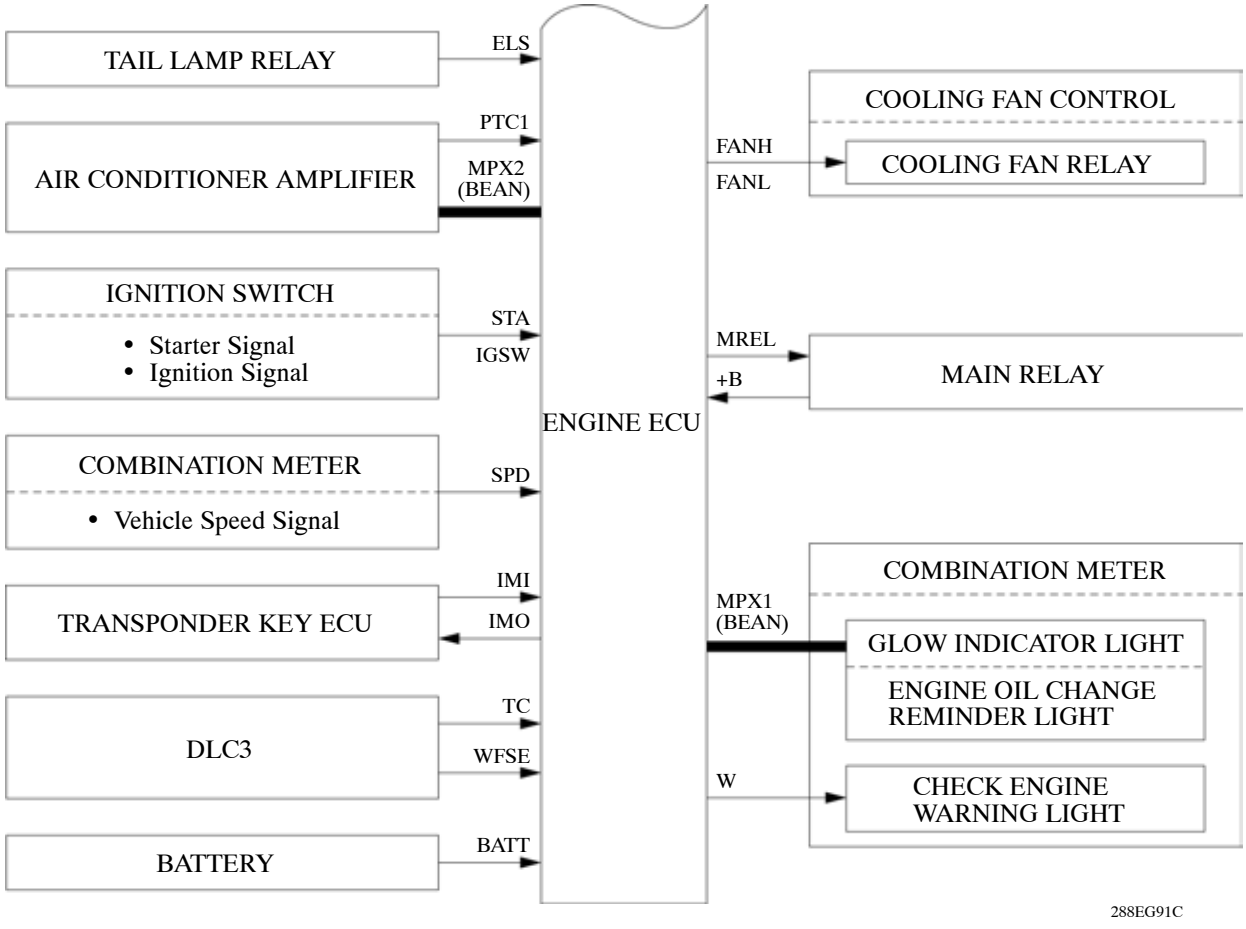
TAIL LAMP RELAY
ELS
AIR CONDITIONER AMPLIFIER
PTC1
MPX2 (BEAN)
IGNITION SWITCH
• Starter Signal
• Ignition Signal
STA
IGSW
COMBINATION METER
• Vehicle Speed Signal
SPD
TRANSPONDER KEY ECU
IMI
IMO
DLC3
TC
WFSE
BATTERY
BATT
ENGINE ECU
COOLING FAN CONTROL
COOLING FAN RELAY
FANH
FANL
MAIN RELAY
MREL
+B
COMBINATION METER
GLOW INDICATOR LIGHT
ENGINE OIL CHANGE REMINDER LIGHT
MPX1 (BEAN)
CHECK ENGINE WARNING LIGHT
W
288EG91C

3. Engine Control System Diagram

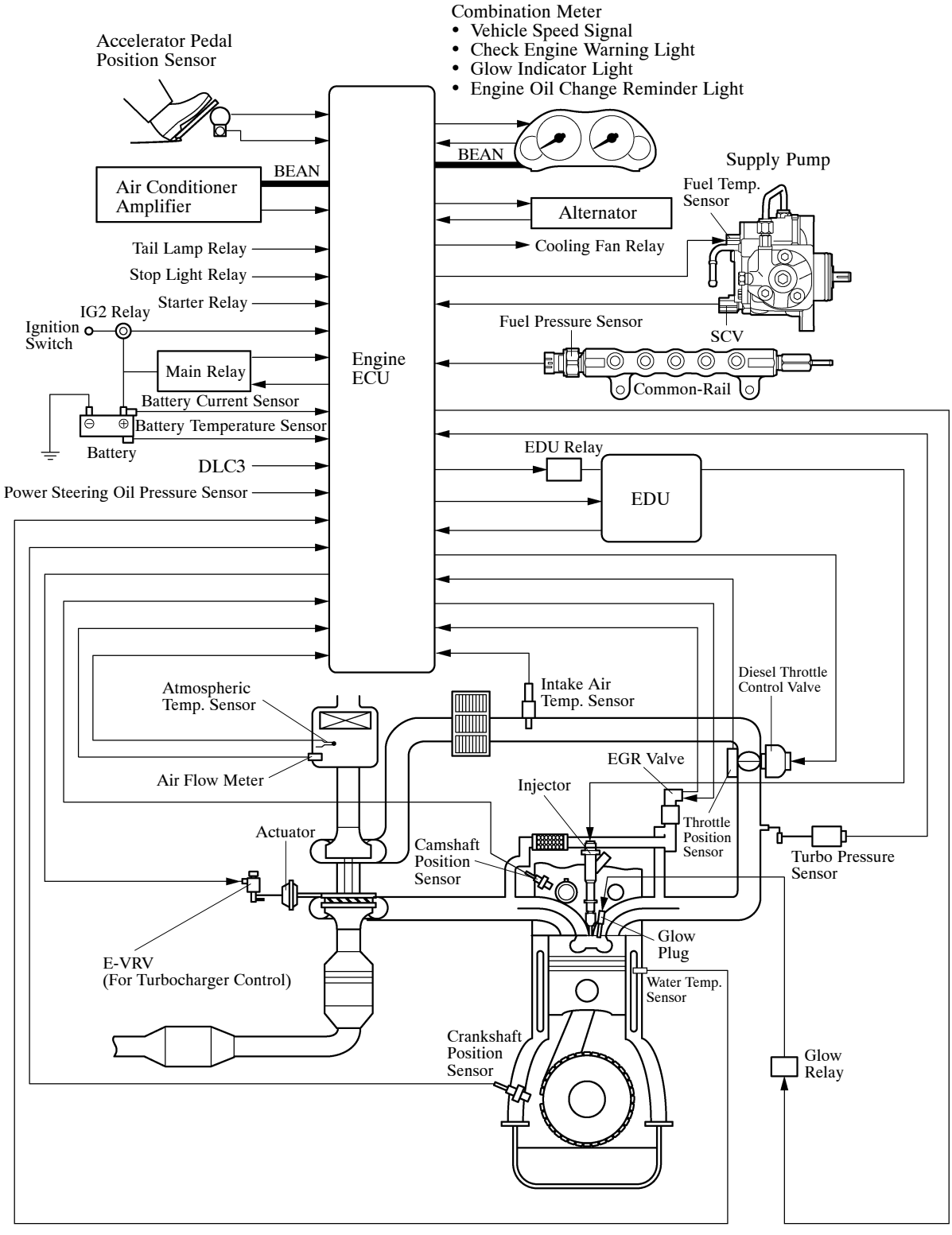

288EG06Y

NF

4. Layout of Main Component

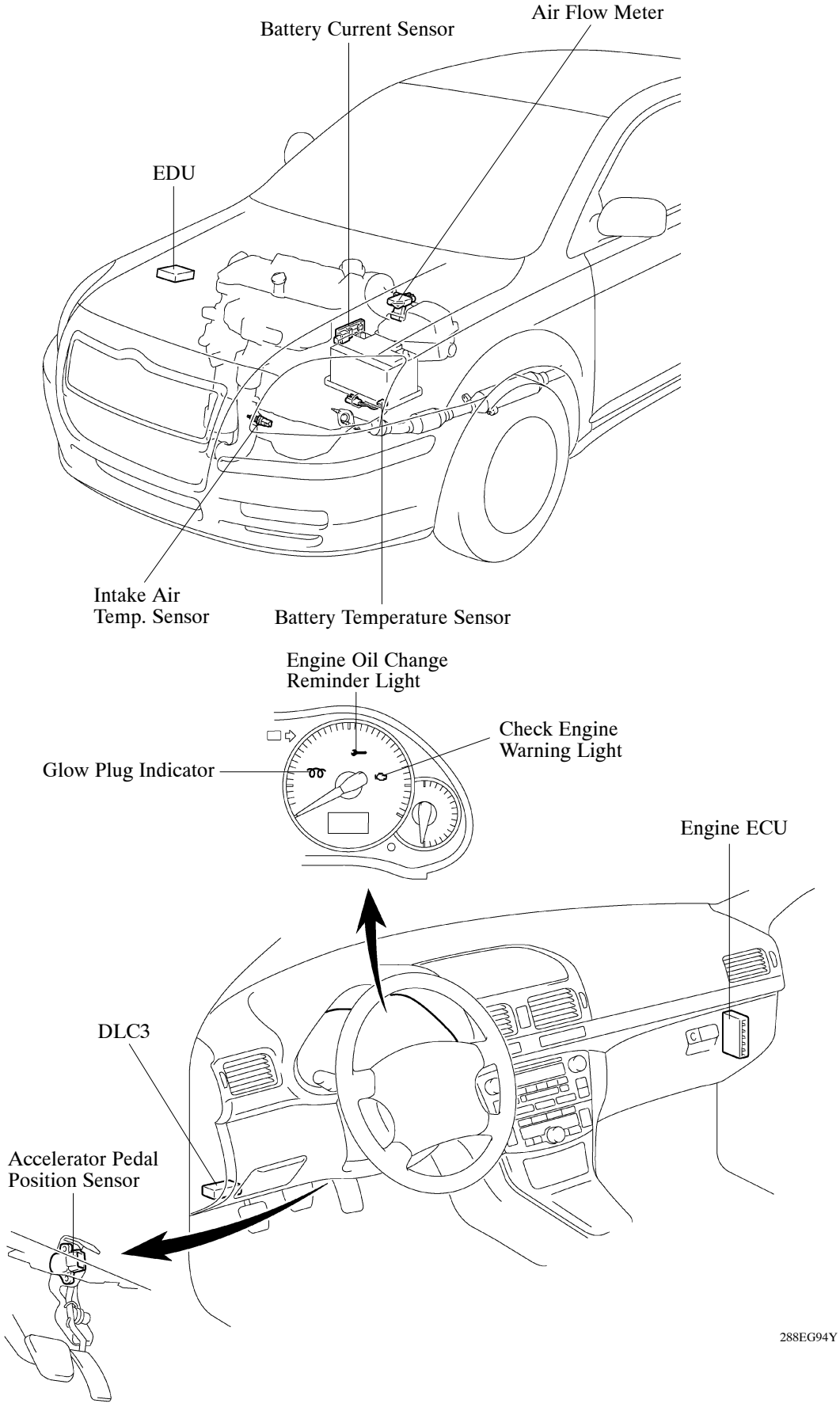

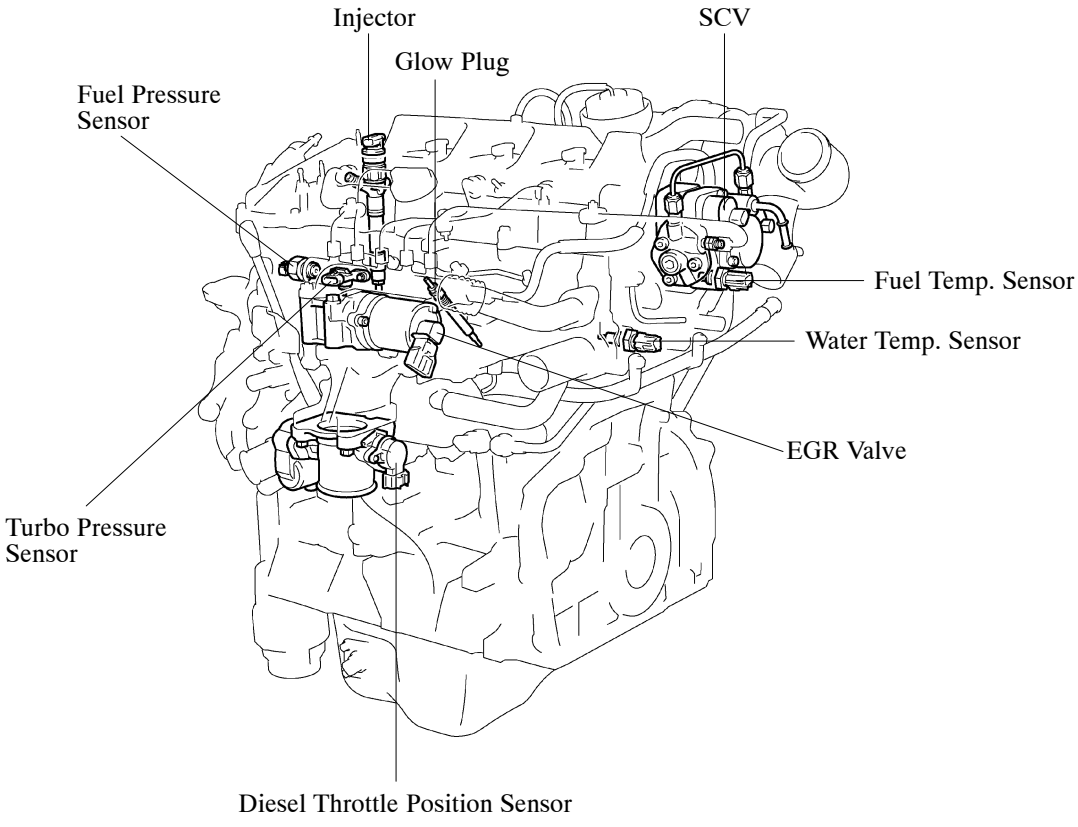
Injector
SCV
Glow Plug
Fuel Pressure Sensor
Fuel Temp. Sensor
Water Temp. Sensor
EGR Valve
Turbo Pressure Sensor
Diesel Throttle Position Sensor

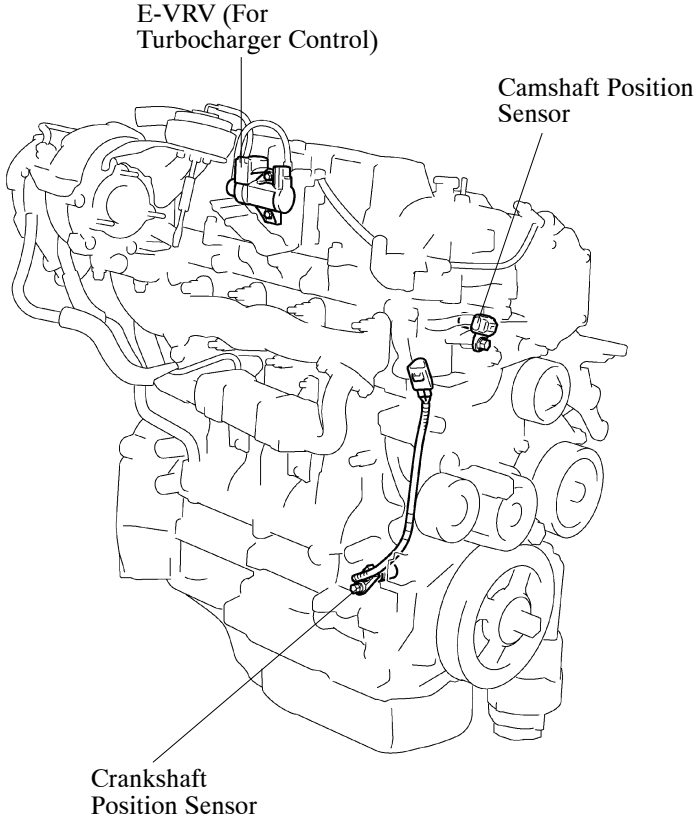
E-VRV (For Turbocharger Control)
Camshaft Position Sensor
Crankshaft Position Sensor

288EG35Y

NF

5. Main Component of Engine Control System

General

The main components of the 2AD-FTV engine control system are as follows:

Components	Outline	Quantity
Engine ECU	32-bit CPU	1
EDU	Including a built-in DC-DC converter	1
Air Flow Meter	Hot-wire Type	1
Crankshaft Position Sensor (Rotor Teeth)	Pick-up Coil Type (36 – 2)	1
Camshaft Position Sensor (Rotor Teeth)	Pick-up Coil Type (1)	1
Fuel Pressure Sensor	Semiconductor Strain Gauge Type	1
Accelerator Pedal Position Sensor	Linear (No-Contact) Type	1
Diesel Throttle Position Sensor	Linear (No-Contact) Type	1

Air Flow Meter

The air flow meter of diesel engine is used precise fuel injection volume control and EGR control to realize excellent clean emission.

- The plug-in type air flow meter is used and allows a portion of the intake air to flow through the detection area. By directly measuring the mass and the flow rate of the intake air, the detection precision is ensured and the intake air resistance is reduced.
- The air flow meter has a built-in atmospheric temperature sensor.

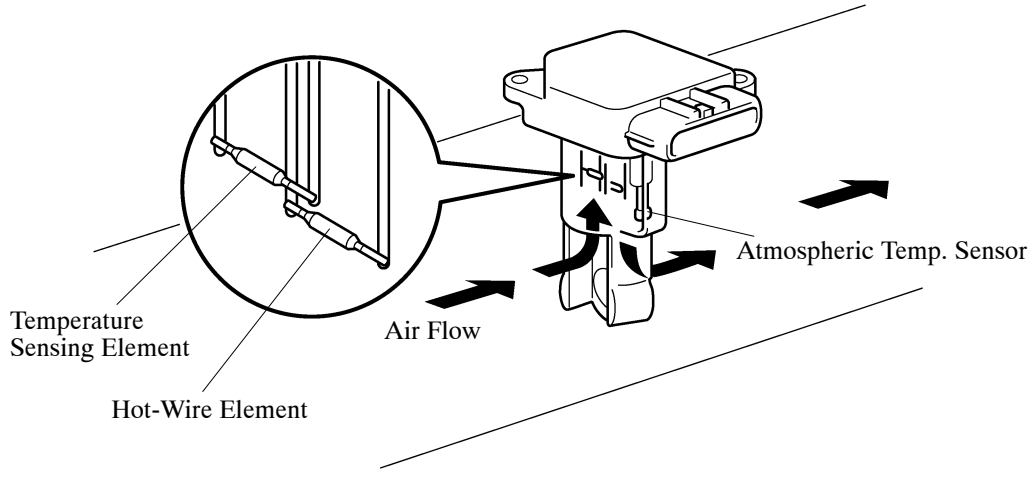

204EG54

Crankshaft Position Sensor

The timing rotor of the crankshaft consists of 34 teeth, with 2 teeth missing. The crankshaft position sensor outputs the crankshaft rotation signals every 10°, and the missing teeth are used to determine the top-dead-center.

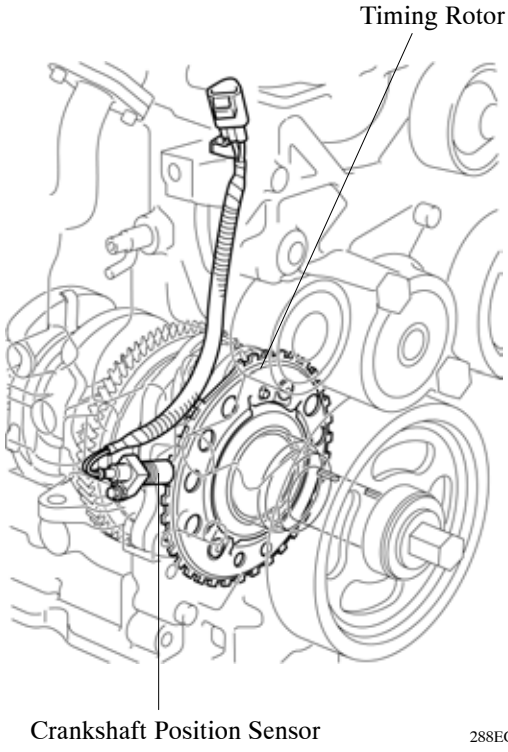

288EG44C

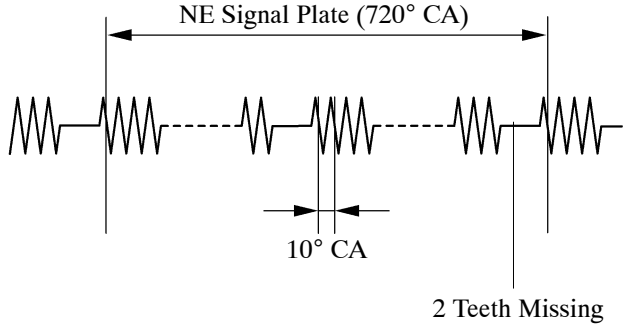

240EG90

Camshaft Position Sensor

The hall element type camshaft position sensor is used to detect the camshaft position. The sensor generates one signal in every two revolutions of the crankshaft by using the timing trigger of the timing sprocket.

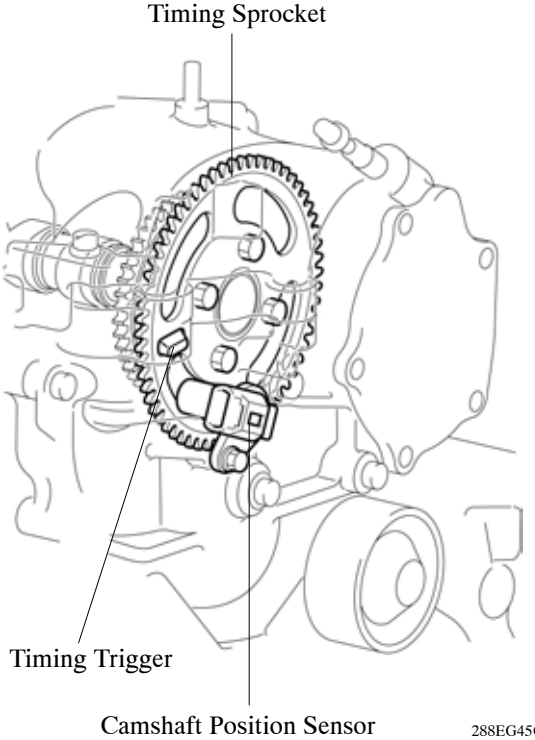

288EG45C

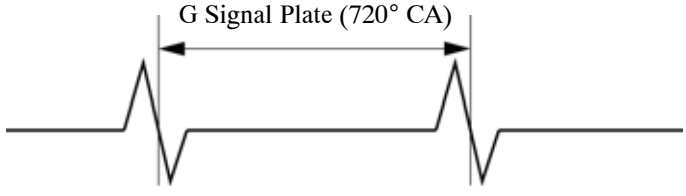

288EG95C

Accelerator Pedal Position Sensor

The accelerator pedal position sensor converts the acceleration pedal depressing angles into electronic signals with two differing characteristics and outputs them to the engine ECU. One is the VPA1 signal that linearly outputs the voltage along the entire range of the accelerator pedal depressed angle. The other is the VPA2 signal that outputs an offset voltage.

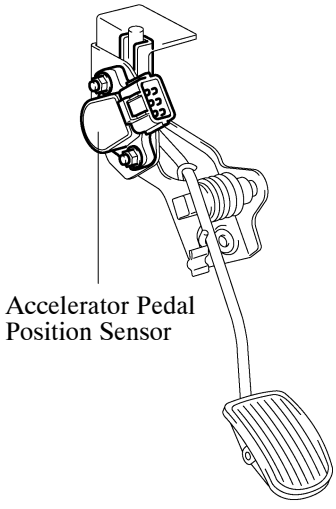

206EG37

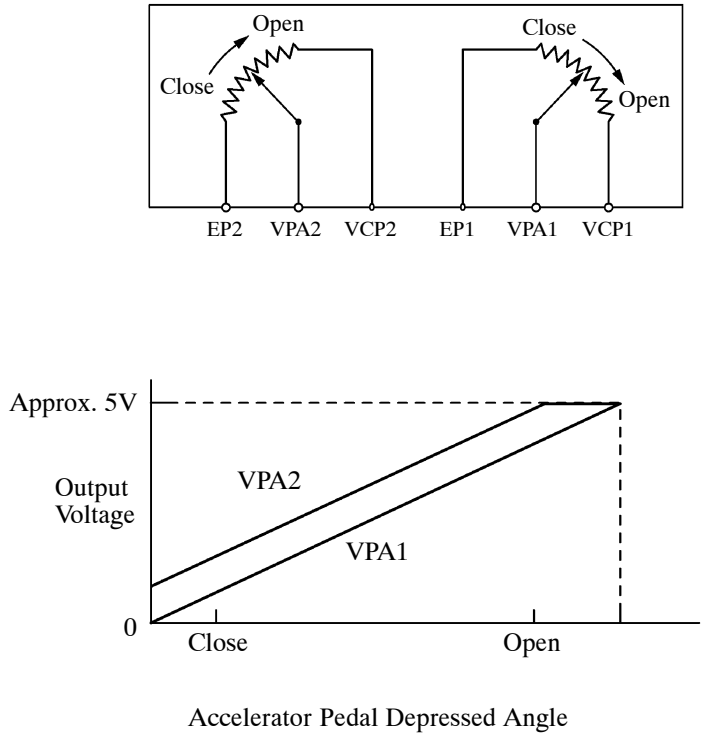

264EG18

Throttle Position Sensor

The non-contact type throttle position sensor uses a Hall IC, which is integrated with the throttle body. A magnetic yoke surrounds the Hall IC. The Hall IC converts the changes that occur in the magnetic flux at that time into electrical signals and outputs them in the form of a diesel throttle control valve effort to the engine ECU.

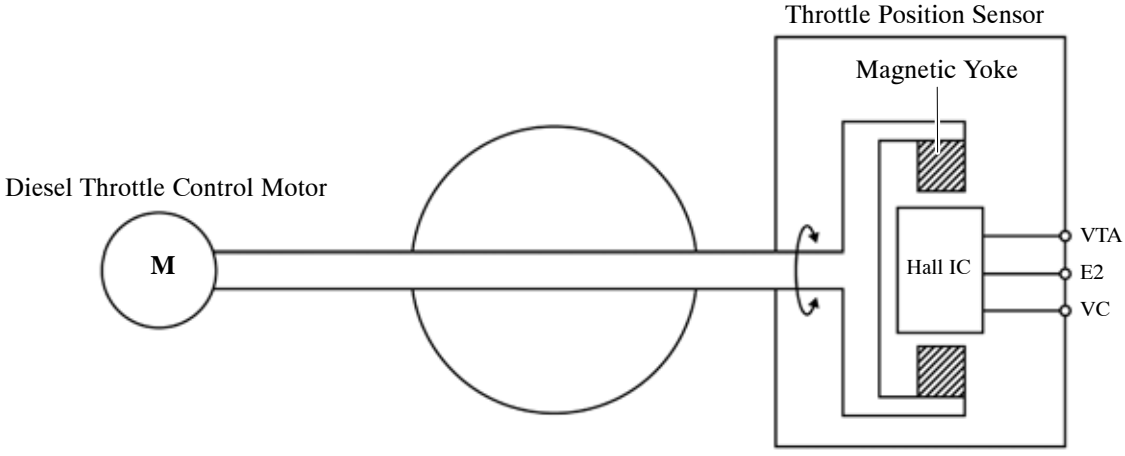

266NF77

▶ Output Characteristic ◀

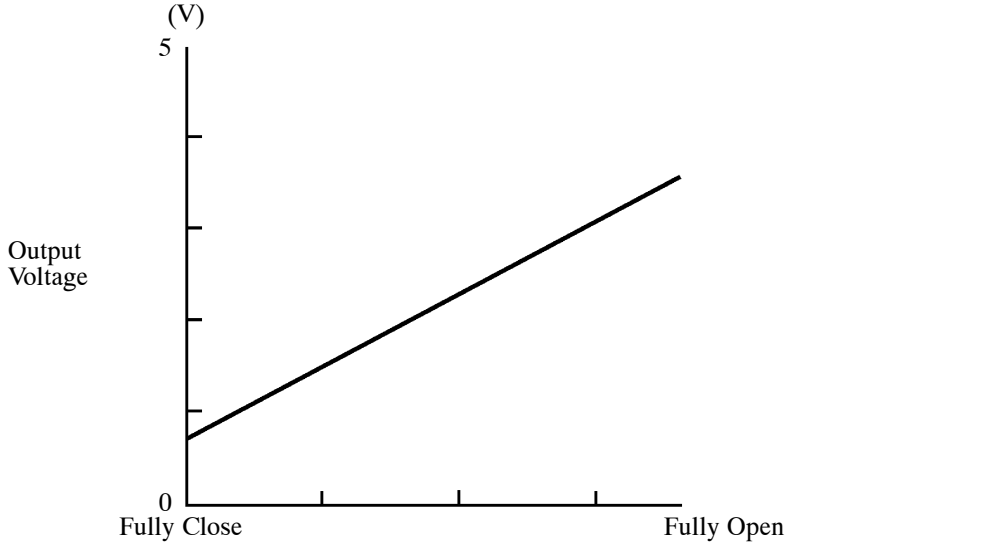

266NF103

Service Tip

The inspection method differs from the contact type throttle position sensor because this sensor uses a Hall IC. For details, see the Avensis Repair Manual Supplement (Pub. No. RM1174E).

6. Fuel Pressure Control

Engine ECU calculates the target injection pressure (25 – 167 MPa) based on the engine conditions, that are the signals from the accelerator pedal position sensor and the crankshaft position sensor.
To control fuel pressure, signals sent to SCV (Suction Control Valve) of the supply pump regulate the pumping volume, so that the pressure detected by the fuel pressure sensor matches the target injection pressure.

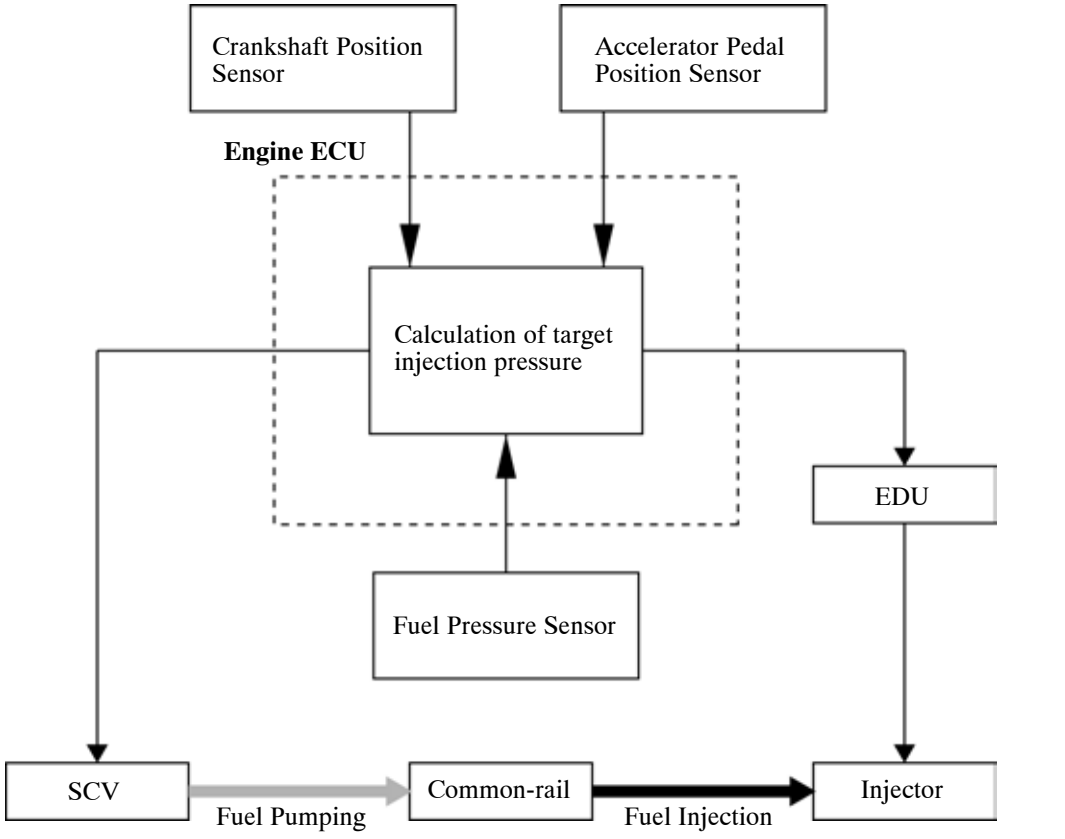

288EG58C

7. Charging Control

General

The charging control system controls the generated voltage of the alternator according to driving conditions for fuel economy. Voltage is generated while decelerating. During constant-speed driving, battery charging and discharging are repeated to maintain a constant battery voltage.

- This control consists of the engine ECU, battery current sensor, battery temperature sensor, alternator and various sensors and switches.
- The engine ECU detects driving condition based on signals from various sensors and switches, and detects charging condition based on signals from the alternator, battery current sensor and battery temperature sensor. Then the engine ECU outputs signals to the IC regulator to control the generated voltage of the alternator.

▶ System Diagram ◀

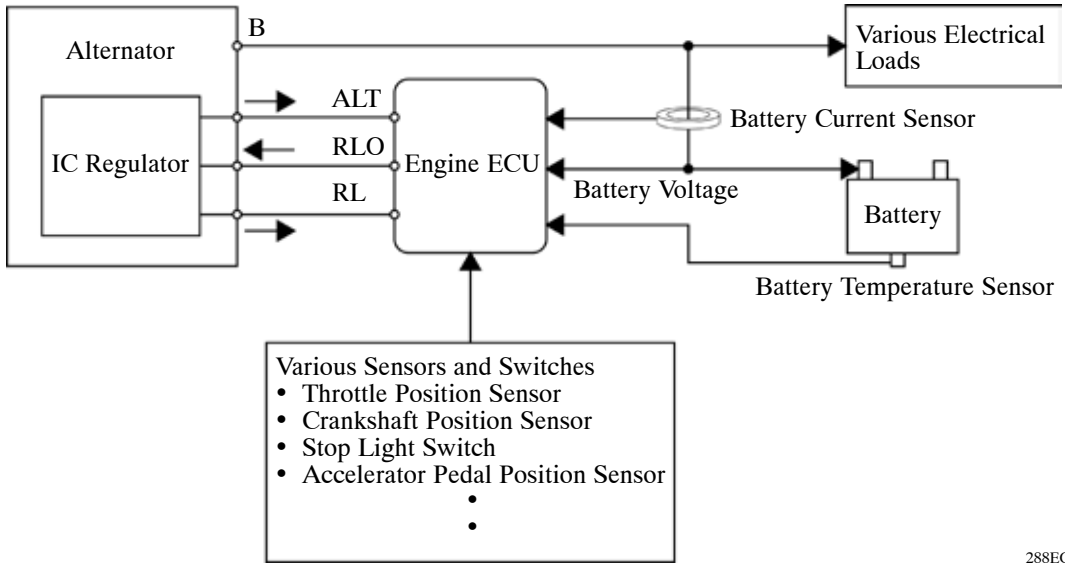

Battery Current Sensor

The battery current sensor detects the charged and discharged battery volume and sends the signal to the engine ECU. The battery current sensor consists of the Hall IC and magnetic. Hall IC is used to detect the battery volume by converting changes in magnetic flux density into voltage.

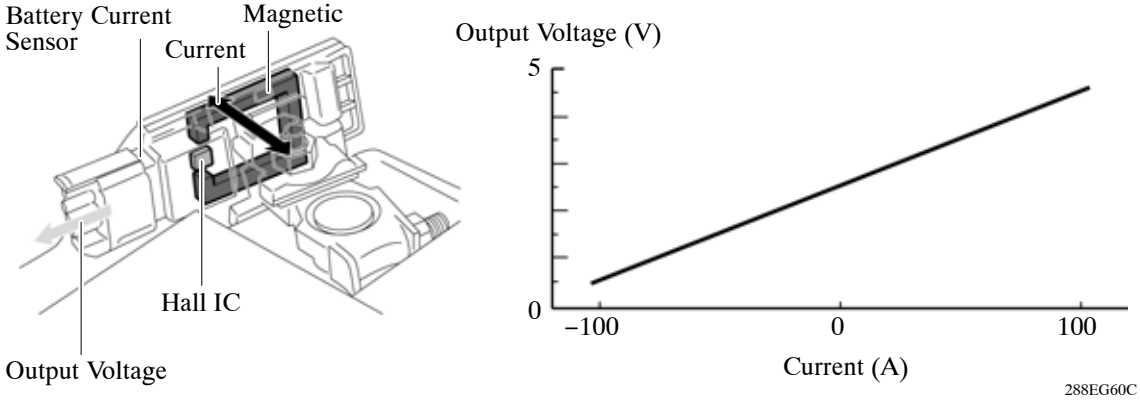

Battery Temperature Sensor

The battery characteristic (battery internal resistance) of taking in current for charging varies according to battery electrolyte temperature. If the electrolyte temperature is too low or too high, the battery internal resistance will increase, resulting in early deterioration. To prevent this, the battery temperature sensor changes its resistance as shown below to detect the temperature.

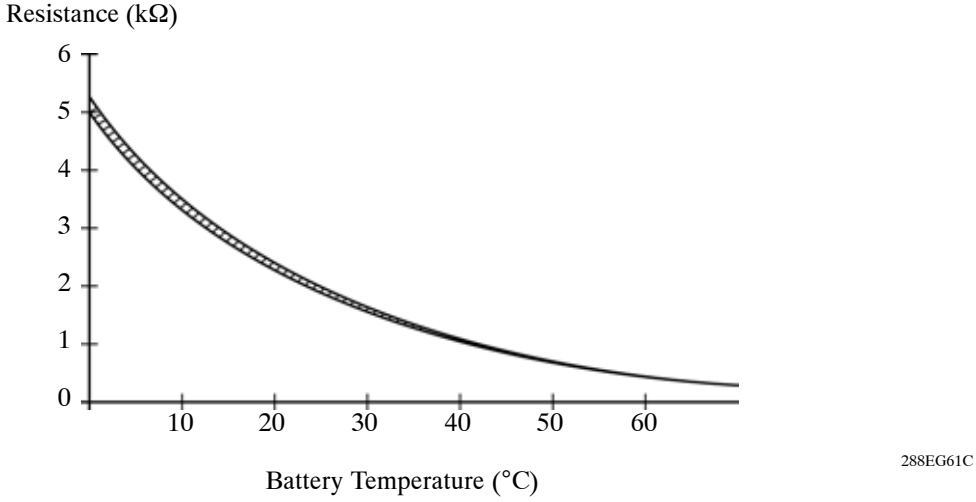

8. Oil Maintenance Management System

General

In the oil maintenance management system, soot volume in the engine oil is calculated from the engine condition. Based on the calculated volume, the engine oil change reminder light turns on to inform the driver of engine oil change timing.

- The engine ECU calculates soot volume from the vehicle speed, engine speed, injection volume, injection timing and intake air volume in order to control this system.

▶ System Diagram ◀

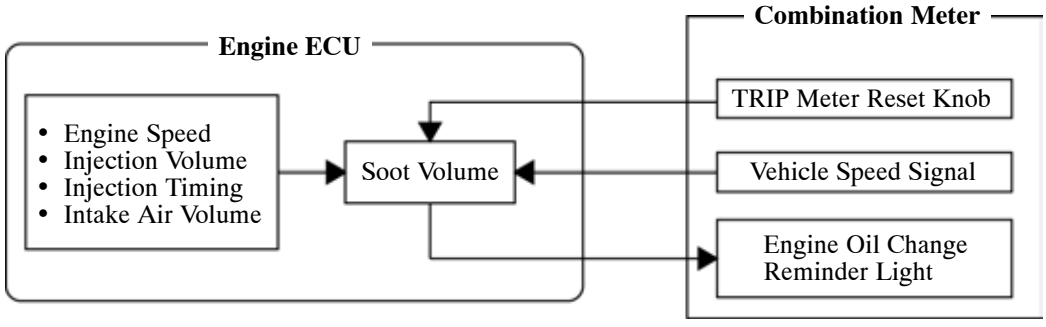

288EG62C

Service Tip

Since this system is controlled based on engine conditions, the reminder light may turn on before driving 30,000 km (the maximum travel distance after oil maintenance). If the reminder light turns on, immediately replace the oil and oil filter.

Calculation Method of Soot Volume

The soot volume largely depends on injection ending timing and air-fuel ratio. The engine ECU calculates soot volume from this information as shown in the graphs below.

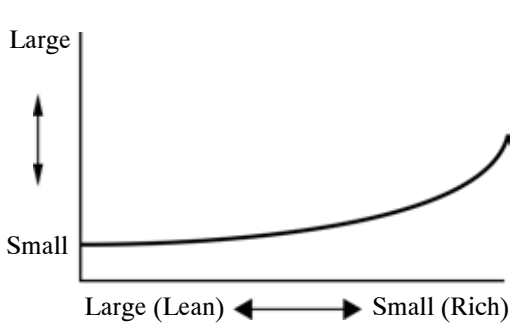

Calculation of Air-Fuel Ratio

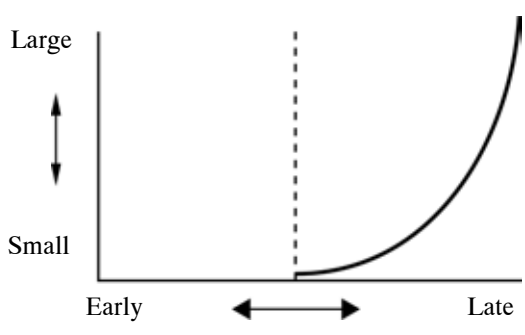

Injection Ending Timing

288EG63C 288EG64C

Service Tip

The accumulated soot volume memorized in engine ECU can be reset by the following procedures.

1) Ignition switch is IG-ON and make sure that the LCD is the odometer display.
2) Ignition switch is OFF. While pushing the “TRIP” meter reset knob, Ignition switch is IG-ON.
3) Until the resetting is completed for at least five seconds and the LCD counts as shown below. Release the “TRIP” meter reset knob when the resetting is completed.
4) After the resetting is completed, the LCD displays as follows for one second. Then, the LCD displays the odometer.

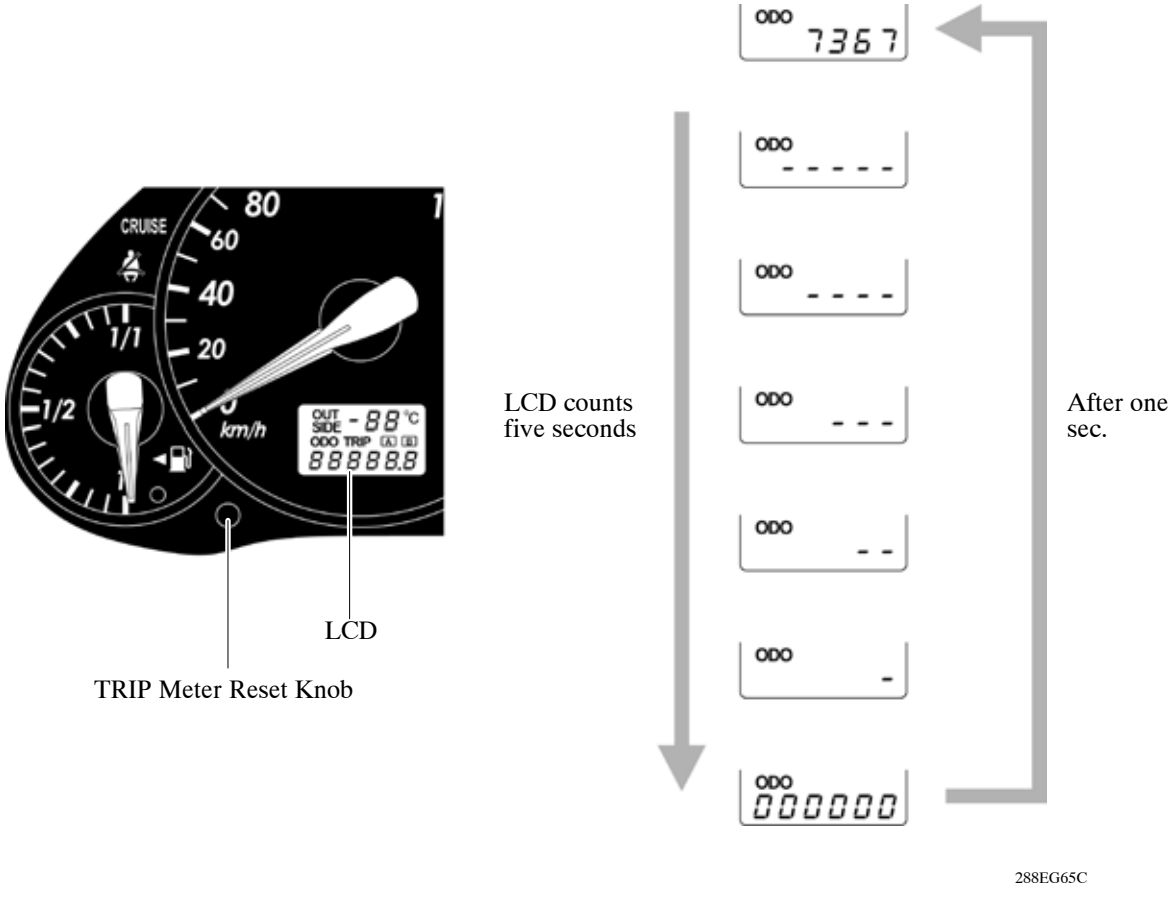

9. Diagnosis

- The diagnosis uses the EURO-OBD (Europe On-Board Diagnosis) that complies with European regulations.
- When the Engine ECU detects a malfunction, the Engine ECU makes a DTCs (Diagnostic Trouble Codes) and memorizes the failed section. Furthermore, the check engine warning light in the combination meter illuminates to inform the driver.
- The Engine ECU will also store the DTCs (Diagnostic Trouble Codes) of the malfunctions. The DTC can be accessed by using the intelligent tester II.
- For details, see the Avensis Repair Manual Supplement (Pub. No. RM1174E).

Service Tip

To clear the DTC that is stored in the Engine ECU, use an intelligent tester II, disconnect the battery terminal or remove the EFI fuse for 1 minute or longer.

10. Fail-Safe

When the Engine ECU detects a malfunction, the Engine ECU stops or controls the engine according to the data already stored in the memory.

▶ Fail-Safe Chart ◀

DTC	Fail-safe Operation	Fail-safe Deactivation Conditions
P0087	Limits the engine power.	Ignition switch OFF
P0088	Limits the engine power.	Ignition switch OFF
P0093	After shunt driving control is performed for 1 minute, engine stalls.	Ignition switch OFF
P0095, P0097, P0098	Intake air (intake manifold) temperature is fixed at 145°C (293°F).	“Pass” condition detected
P0100, P0102, P0103	Limits the engine power.	“Pass” condition detected
P0105, P0107, P0108	Turbo pressure is fixed value.	“Pass” condition detected
P0110, P0112, P0113	Intake air (built in mass air flow meter) temperature is fixed value.	“Pass” condition detected
P0115, P0117, P0118	Fuel temperature sensor is specified value.	“Pass” condition detected
P0120, P0122, P0123	Limits the engine power.	Ignition switch OFF
P0168	Limits the engine power.	“Pass” condition detected
P0180, P0182, P0183	Fuel temperature is fixed at 40°C (104°F).	“Pass” condition detected
P0190, P0192, P0193	Limits the engine power.	Ignition switch OFF
P0200	Limits the engine power.	Ignition switch OFF
P0234	Limits the engine power.	Ignition switch OFF
P0335	Limits the engine power.	“Pass” condition detected
P0340	Limits the engine power.	“Pass” condition detected
P0400	Limits the engine power.	Ignition switch OFF
P0405, P0406 P0488	Limits the engine power.	Ignition switch OFF

(Continued)

DTC	Fail-safe Operation	Fail-safe Deactivation Conditions
P0500	Vehicle speed is fixed at 0 km/h (0 mph).	“Pass” condition detected
P0627	Limits the engine power.	“Pass” condition detected
P1229	Limits the engine power.	Ignition switch OFF
P1251	Limits the engine power.	Ignition switch OFF
P1611	Limits the engine power.	Ignition switch OFF
P2120, P2121, P2122, P2123, P2125, P2127, P2128, P2138	Limits the engine power.	Ignition switch OFF
P2226, P2228, P2229	Atmospheric pressure is fixed value.	“Pass” condition detected

2AD-FHV ENGINE

■ DESCRIPTION

The newly developed 2AD-FHV TOYOTA D-4D (Direct injection 4 Stroke common-rail Diesel engine) is in-line 4-cylinder, 2.2 liter, 16-valve DOHC turbocharged with intercooler diesel engine.
This is the engine that has been changed based on the 2AD-FTV engine to realize higher performance. In addition, this engine uses D-CAT (Diesel Clean Advanced Technology) system for cleaner emission.

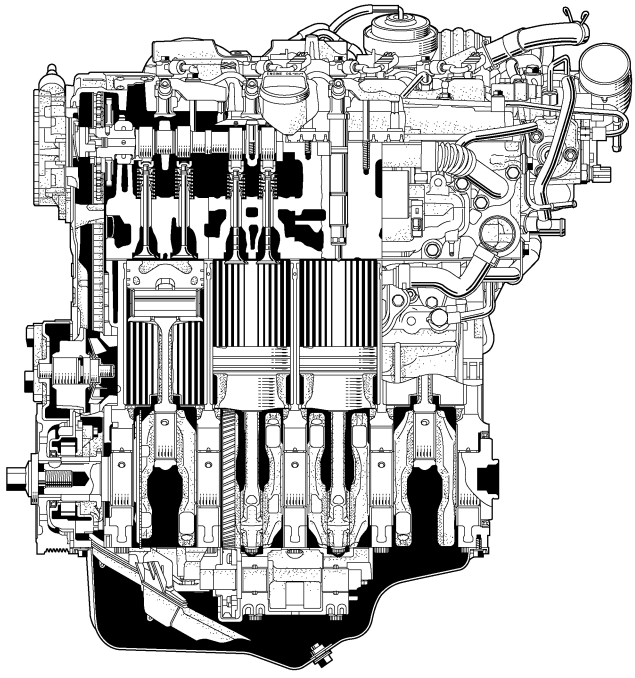

288EG87Y

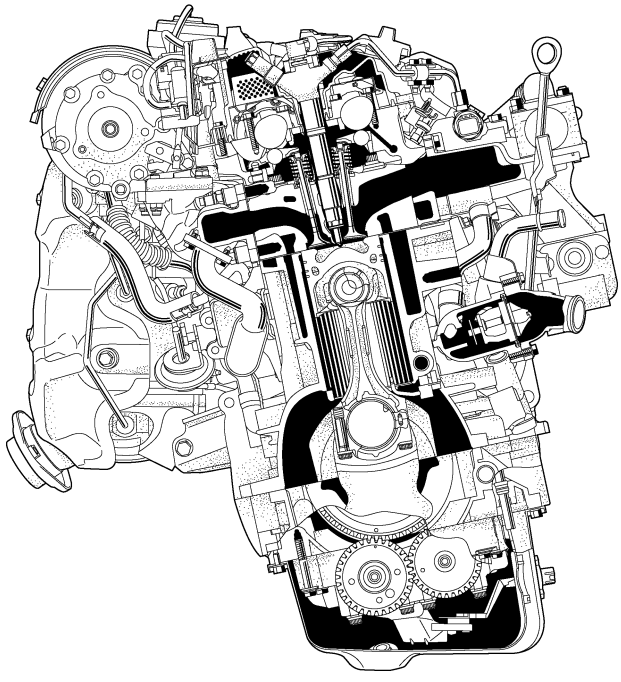

288EG88Y

▶ Engine Specification ◀

No. of Cyls. & Arrangement			4-Cylinder, In-line
Valve Mechanism			16-Valve DOHC, Chain and Gear Drive
Combustion Chamber			Direction Injection Type
Manifolds			Cross-Flow
Fuel System			Common-Rail Type
Displacement cm^3 (cu. in.)			2231 (136.1)
Bore × Stroke mm (in.)			86.0 × 96.0 (3.39 × 3.78)
Compression Ratio			15.8 : 1
Max. Output (EEC)			130 kW @ 3600 rpm
Max. Torque (EEC)			400 N·m @ 2000 – 2600 rpm
Oil Capacity		Dry	6.7 liters (7.1 US qts, 5.9 Imp. qts)
		with Oil Filter	5.9 liters (6.2 US qts, 5.2 Imp. qts)
		without Oil Filter	5.5 liters (5.8 US qts, 4.8 Imp. qts)
Oil Grade			ACEA B1, API CF-4 or CF
Engine Coolant	Type		TOYOTA Genuine Super Long Life Coolant or the following*1
	Capacity	Without Combustion Type Power Heater	8.0 liters (8.5 US qts, 7.0 Imp. qts)
		With Combustion Type Power Heater	8.2 liters (8.7 US qts, 7.2 Imp. qts)
Firing Order			1 - 3 - 4 - 2
Fuel Cetane Number			48 or more
Emission Regulation			EURO IV*2
Engine Service Mass*3 (Reference) kg (lb)			168 (370)

*1: Similar high quality ethylene glycol based non-silicate, non-amine, non-nitrite, and non-borate coolant with long-life hybrid organic acid technology. (Coolant with hybrid organic acid technology consists of the combination of low phosphates and organic acids.)

*2: NOx: 50% less than EURO IV regulations PM: 80% less EURO IV regulations

*3: Weight shows the figure with the oil and engine coolant fully filled.

▶ Valve Timing ◀

: IN Valve Opening Angle
: EX Valve Opening Angle

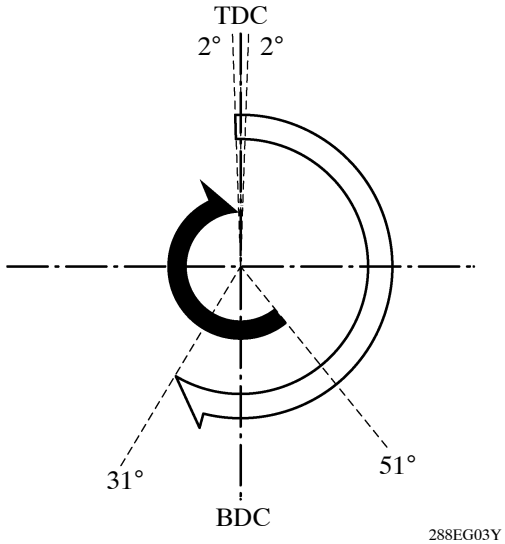

Intake	Open	2° BTDC
	Close	31° ABDC
Exhaust	Open	51° BBDC
	Close	2° ATDC

NF

▶ Performance Curve ◀

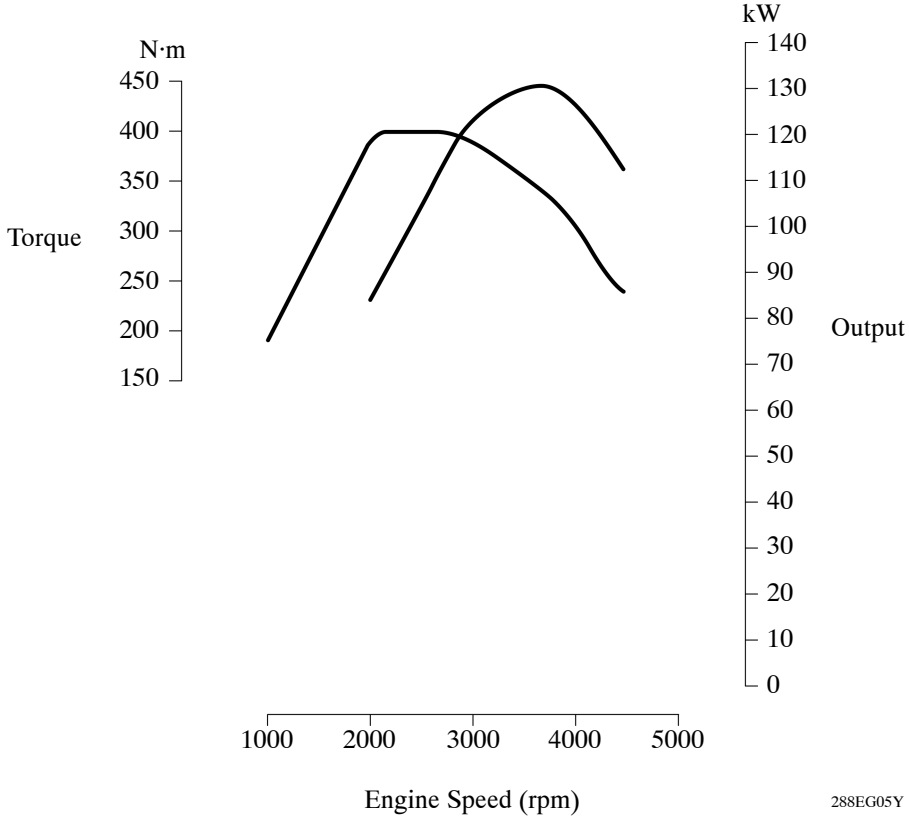

■MAJOR DIFFERENCE

●The major difference between 2AD-FHV engine from 2AD-FTV is as follows:

Item	Outline
Features	•The D-CAT (Diesel-Clean Advanced Technology) system is adopted. For details see page 73. • A high-velocity piezo type injector is used to realize optimum fuel injection characteristics, to reduce emissions and combustion noise, and to achieve high output. • By setting the maximum fuel injection pressure at 180Mpa, the diameter of fuel spray particles is reduced. This enhances combustion efficiency and fuel economy. • The 2AD-FTV engine has provided low compression ratio, but the compression ratio of this engine is further lower. • By adopting a lower compression ratio and a higher boost turbocharger, the volume of intake air and fuel injection at the point of maximum cylinder pressure, achieving high output. This also reduces pumping loss, and thus enhances fuel economy. • A ceramic glow plug with a higher operating temperature than that of conventional metal glow plugs is used to enhance startability, and reduce white smoke.
Engine Proper	• Along with the use of the piezo type injector, the shape of the cylinder head cover is changed due to a change in the mounting method of the injector. For details see page 76. • A hole to install the exhaust fuel addition injector is added to the No.4 exhaust port of the cylinder head. For details see page 76. •The shape of the piston combustion chamber is changed. For details see page 77.
Cooling System	• The water circuit is changed due to the adoption of the water-cooled turbocharger. For details see page 78.
Intake and Exhaust System	• A bypass passage with a switching valve is added to the EGR cooler. For details see page 79. •The turbocharger is changed to a water-cooled type. For details see page 80. • The exhaust manifold converter uses NSR and DPNR (Diesel Particulate-NOx Reduction) catalysts. For details see page 80.
Fuel System	•A fuel outlet for the exhaust fuel addition injector is added to the supply pump. For details see page 82. •Addition of a pressure discharge valve to the common rail. For details see page 83. • The fuel pressure sensor that contains two circuits (main and sub) is used. For details see page 94. •A piezo type injector is used. For details see page 84. • The exhaust fuel addition injector is added for catalyst support control. For details see page 86.
Engine Control System	• Catalyst support control is used in accordance with the adoption of the D-CAT system. For details see page 99. • A differential pressure sensor, an air fuel ratio sensor, and two exhaust gas temperature sensors are added to perform catalyst support control. For details see page 95. • Along with the addition of the EGR cooler bypass switching valve, the EGR control is changed. For details see page 101.

● Structures other than above are the same as those of the 2AD-FTV engine. For details, refer to 2AD-FTV ENGINE.

■D-CAT SYSTEM

1. General

The D-CAT (Diesel Clean Advanced Technology) system totally controls the intake & exhaust, fuel and engine control systems to reduce PM (Particulate Matter), NOx (Nitric Oxide), and sulfur exhausted from the diesel engine.

- Along with the adoption of the D-CAT system, catalyst support control is used. For details, see page 98.

▶ System Diagram ◀

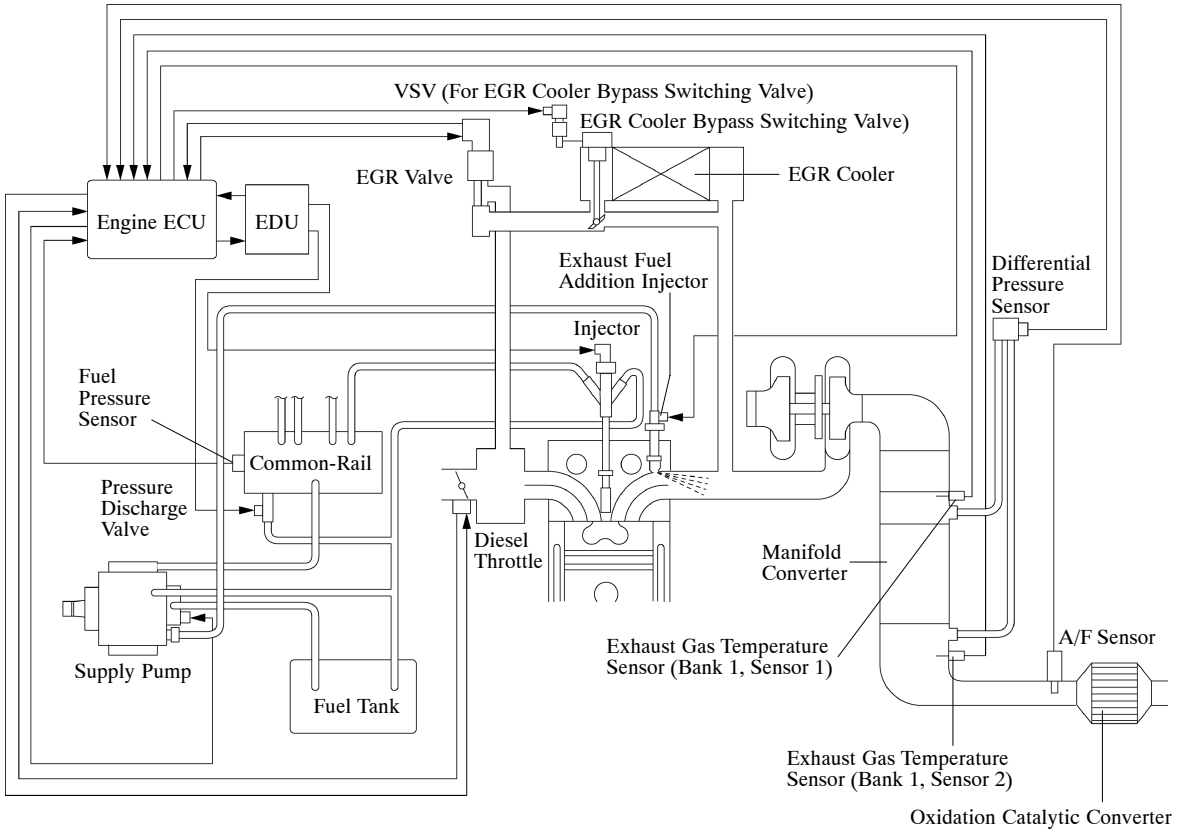

For construction and operation of major parts for each system, refer to the following page according to each system:

- Intake and Exhaust System: See page 79.
- Fuel System: See page 81.
- Engine Control System: See page 87.

2. Major Difference

Along with the change from 1CD-FTV engine to 2AD-FHV engine, the D-CAT system is changed as follows:

- D-CAT switch is discontinued.
- EGR cooler catalyst is discontinued.
- EGR cooler bypass switching valve is added. For details, see page 79.
- Injector is used Piezo type. For details, see page 84.

The basic construction and operation of the D-CAT system are the same as those for the 1CD-FTV engine.

■ FEATURES OF 2AD-FHV ENGINE

The 2AD-FHV engine has achieved the following performance through the use of the items listed below.

(1) High performance and reliability
(2) Low noise and vibration
(3) Lightweight and compact design
(4) Good serviceability
(5) Clean emission and fuel economy

Item		(1)	(2)	(3)	(4)	(5)	2AD-FTV	2AD-FHV
Engine Proper	A cylinder head and cylinder block made of aluminum alloy are used.			○			○	○
	Piston provided with combustion chamber is used in conjunction with the adoption of direct injection.	○				○	○	○
	A balance shaft which is directly driven by the crankshaft is used.	○	○				○	○
Valve Mechanism	Hydraulic lash adjuster is used.	○	○		○		○	○
	A timing chain and chain tensioner are used.		○	○	○		○	○
	Roller rocker arms are used.	○				○	○	○
Lubrication System	An oil filter with a replaceable element is used.				○		○	○
	The water cooling type oil cooler is used.	○					○	○
Cooling System	The engine coolant is used the TOYOTA Genuine SLLC (Super Long Life Coolant).				○		○	○
Intake and Exhaust System	An EGR and a catalytic converter are used.					○	○	○
	A rotary solenoid motor type diesel throttle control motor and a non-contact throttle position sensor are used in the throttle body.					○	○	○
	A linear solenoid type EGR valve is used.					○	○	○
	A water-cooling type EGR cooler is used.					○	○	
	A water-cooled type EGR cooler with a bypass is used.					○		○
	The variable nozzle vane type turbocharger is used.	○				○	○	○
	The exhaust manifold converter uses NSR and DPNR catalysts.					○		○
Fuel System	HP3 type supply pump is used.	○	○	○			○	○
	A common rail type fuel injection system is used.	○	○			○	○	○
	Compensation value and QR code printed solenoid type injector is used.	○				○	○	
	Compensation value and QR code printed piezo type injector is used.	○				○		○
	An exhaust fuel addition injector is used.					○		○
Charging System	A segment conductor type alternator is used.	○		○			○	○
	An alternator pulley with a clutch is used.				○		○	○

Item		(1)	(2)	(3)	(4)	(5)	2AD-FTV	2AD-FHV
Serpentine Belt Drive System	A serpentine belt drive system is used.			○	○		○	○
Engine Control System	A pilot injection control is used.	○					○	○
	A charging control is used.					○	○	○
	An oil maintenance management is used.				○		○	○
	A catalyst support control is used.					○		○

■ENGINE PROPER

1. Cylinder Head Cover

- Along with the adoption of a piezo type injector, the shape of the cylinder head cover is optimally changed from that for the 2AD-FTV engine.
- PCV (Positive Crankcase Ventilation) paths are provided on the left and right side of the cylinder head cover. Accordingly, the capacity of the PCV paths is increased to ensure pollution control performance equal to that of the 2AD-FTV engine cylinder head cover.

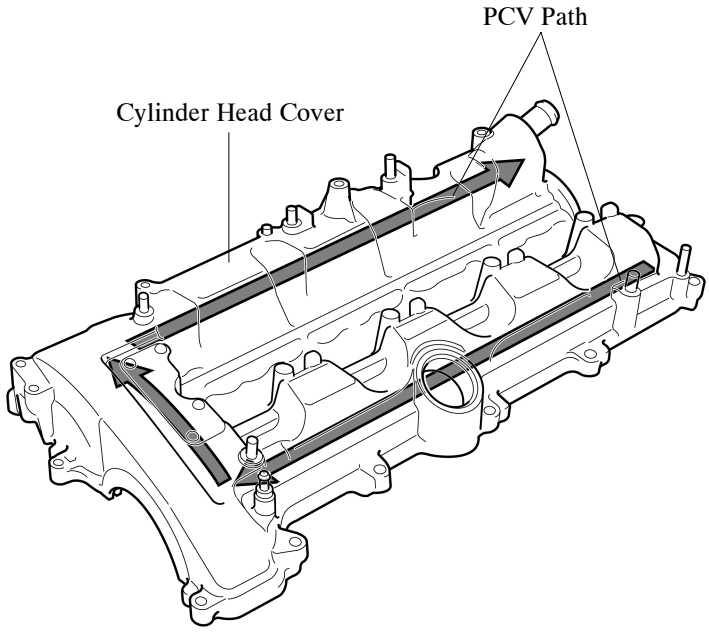

2. Cylinder Head

A hole for installing the exhaust fuel addition injector is located on the No.4 exhaust port of the cylinder head.

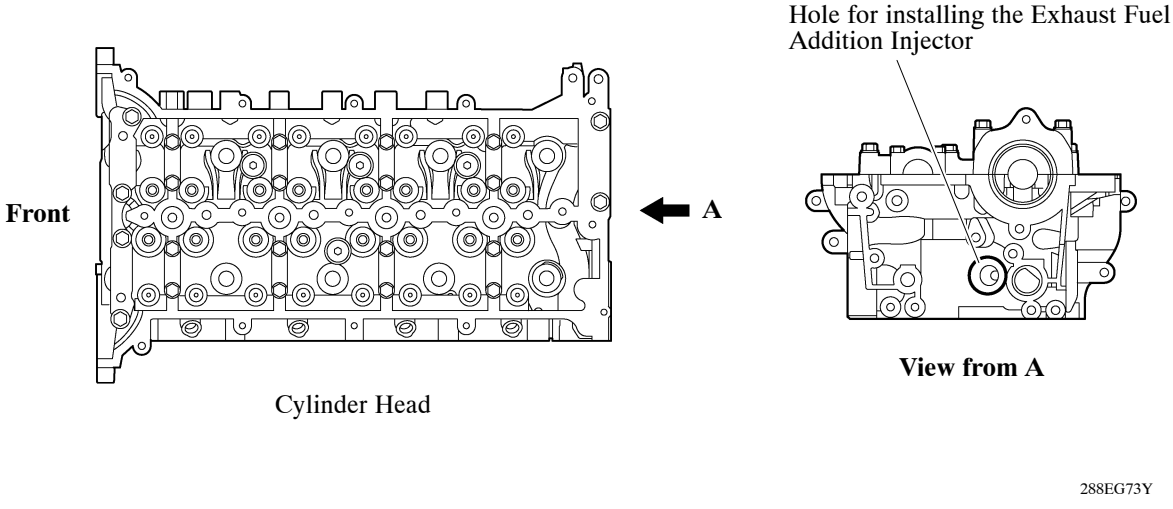

3. Piston

The shape of the combustion chamber is optimized in order to attain low compression and high output.

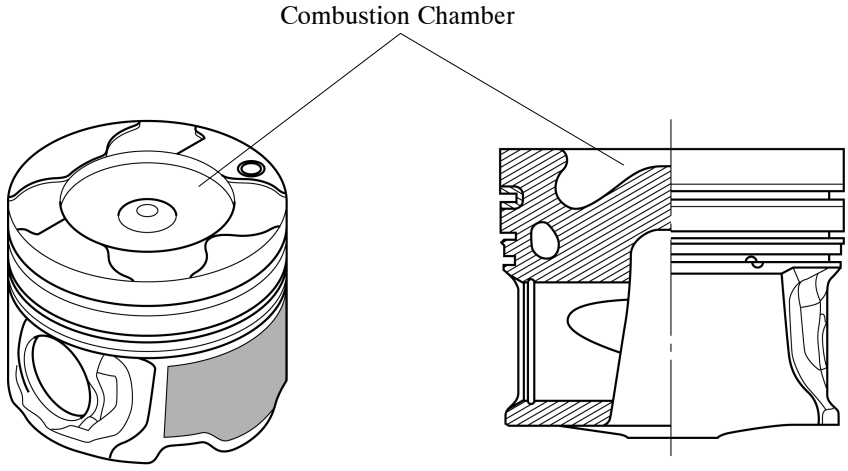

2AD-FHV Engine

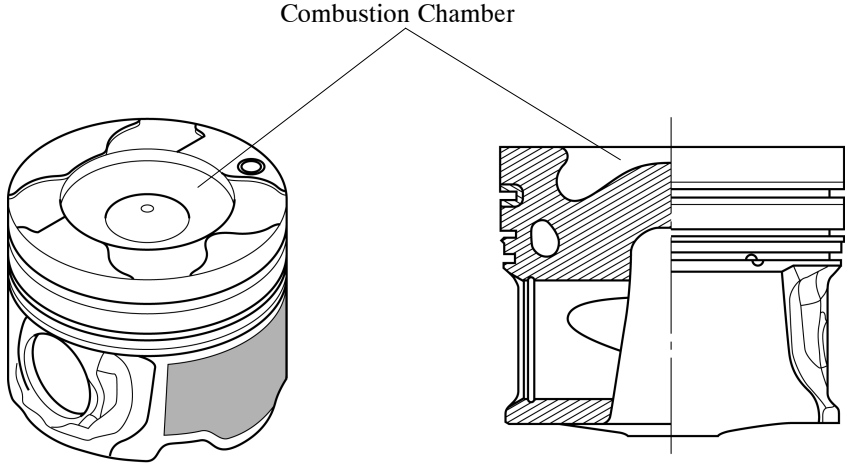

2AD-FTV Engine

288EG75C

■COOLING SYSTEM

Along with the adoption of a water-cooled type turbocharger, the water circuit is changed. Other construction is the same as that of 2AD-FTV. For details, see page 34.

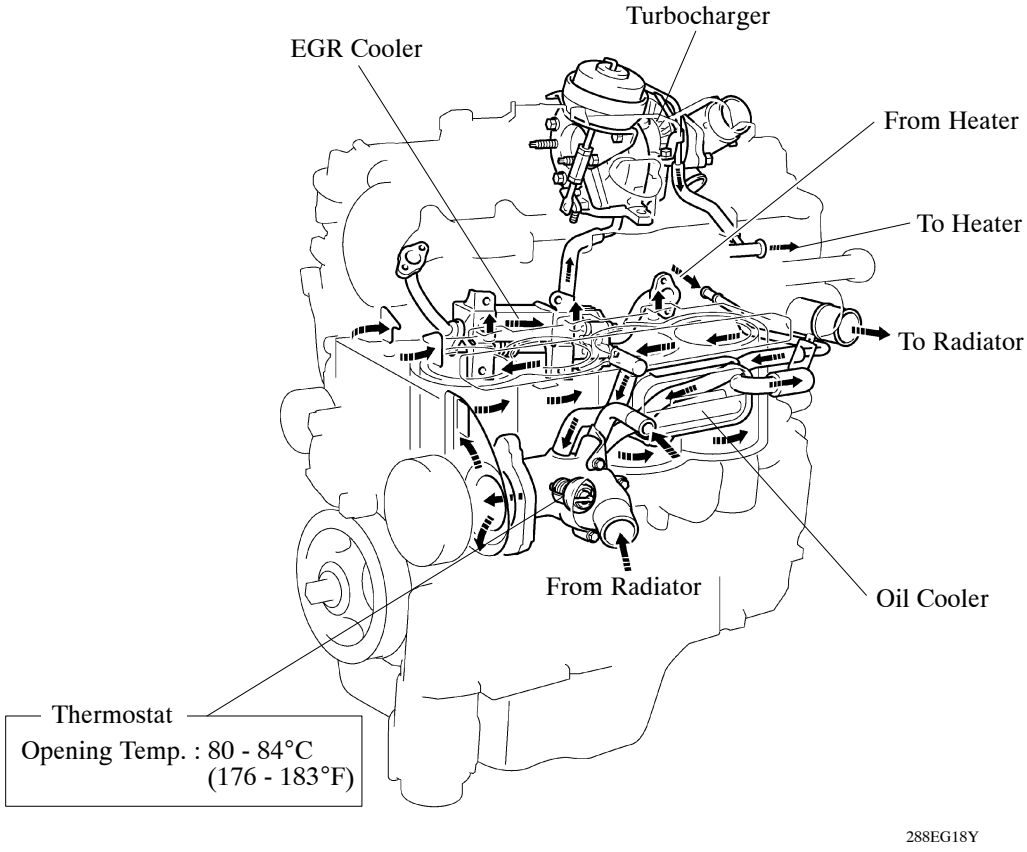

▶ Water Circuit ◀

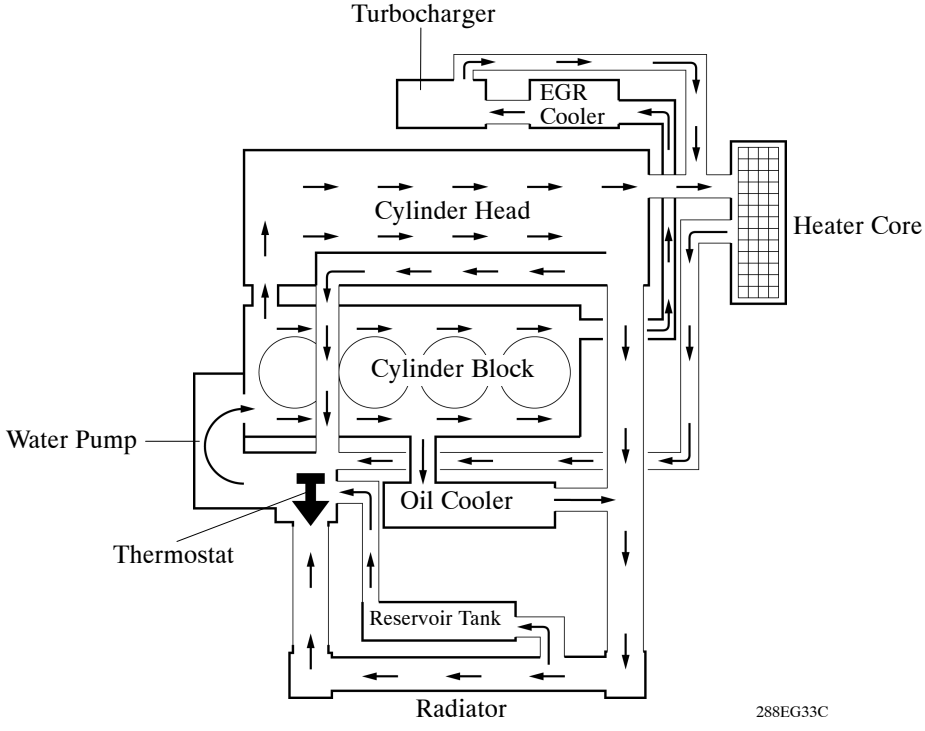

■INTAKE AND EXHAUST SYSTEM

1. General

- A bypass path with a switching valve is added to the EGR cooler.
- A water-cooled type turbocharger is used.
- NSR and DPNR catalyst converters are used in the exhaust manifold converter.

2. EGR Valve and EGR Cooler

A bypass with an EGR cooler bypass switching valve is added to the EGR cooler.

- If EGR gas is cooled down in the EGR cooler with light engine load, compression air temperature decreases. To prevent this, the EGR gas passage is switched by the EGR cooler bypass switching valve.

EGR Valve

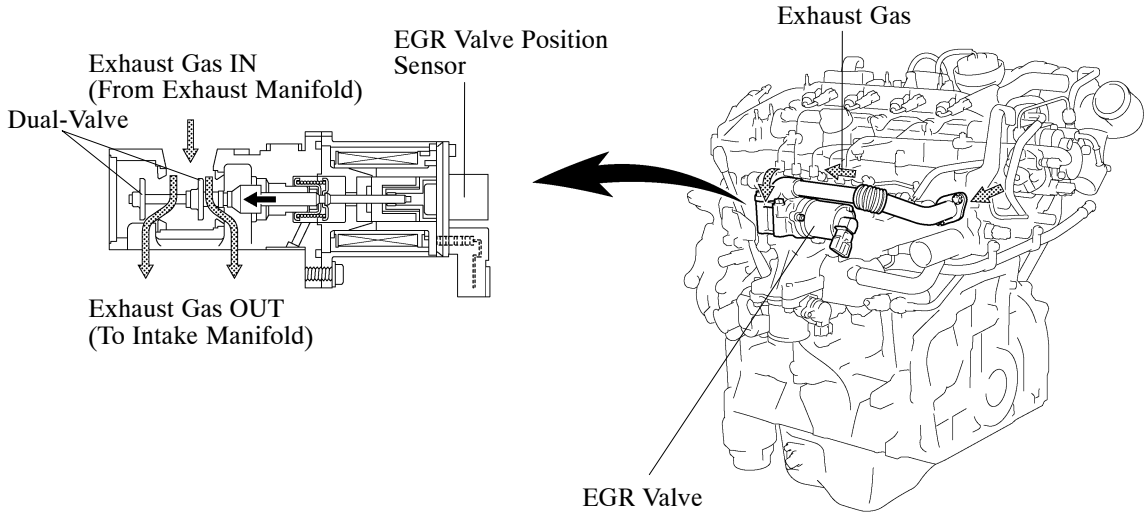

288EG99Y

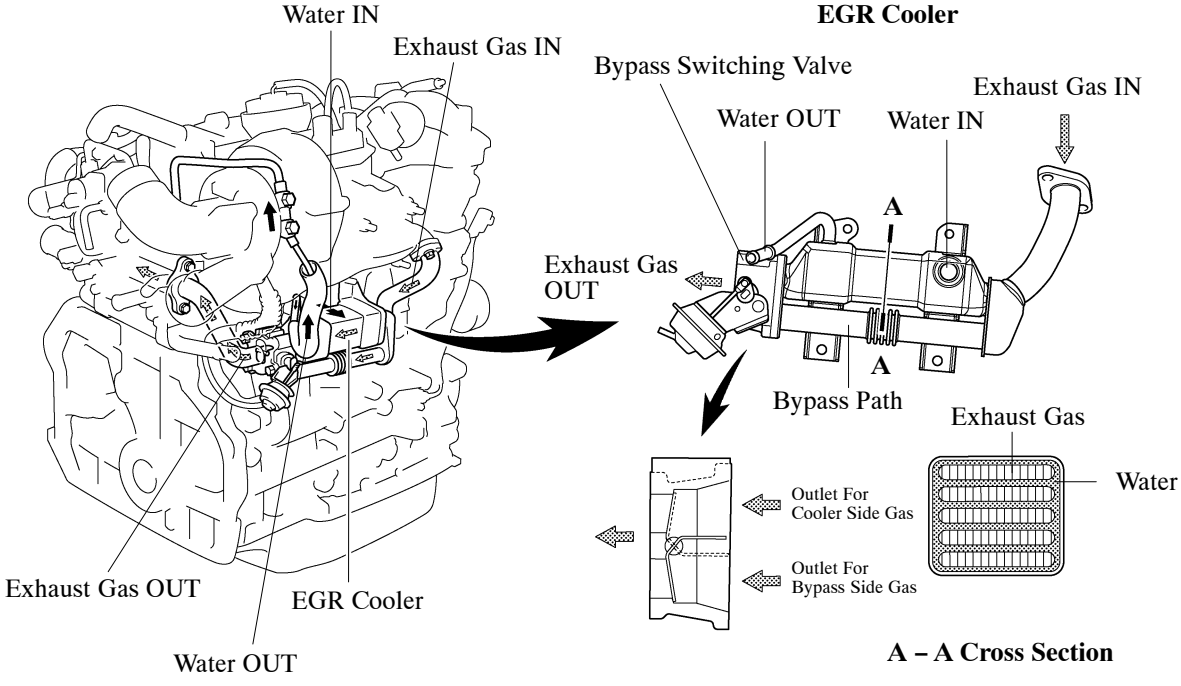

288EG100Y

3. Turbocharger

- The variable nozzle vane type turbocharger drives the vacuum type actuator according to engine condition, and controls the nozzle vane in order to realize high engine output, low fuel consumption and low emissions.
- The turbocharger is cooled with engine coolant.
- The basic operation is the same as that of the 2AD-FTV turbocharger. For details, see page EG-39.

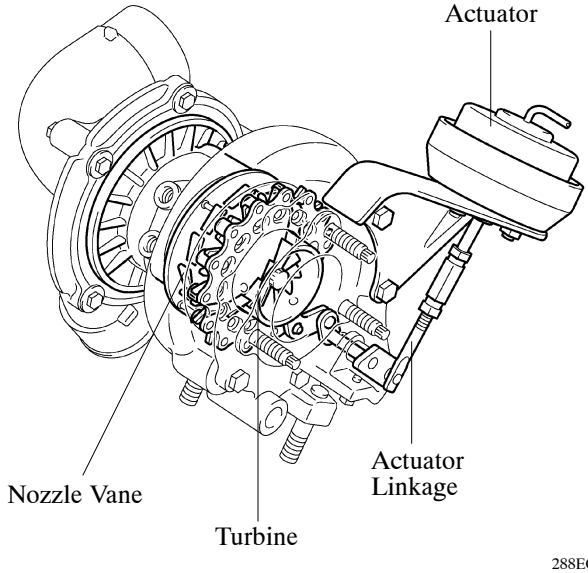

288EG96Y

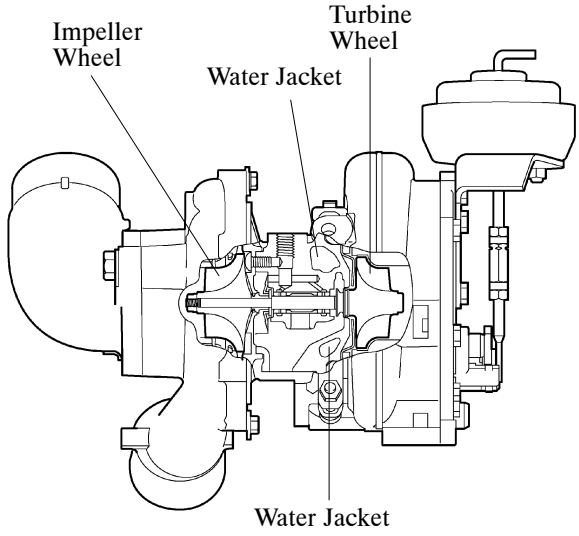

288EG77Y

4. Exhaust Manifold Converter

The exhaust manifold converter consists of the NSR (NOx Storage Reduction) and DPNR (Diesel Particulate-NOx Reduction) catalysts.

- The NSR catalyst purifies the NOx, HC (hydrocarbon), CO (carbon monoxide).
- The DPNR catalyst purifies the PM (Particulate Matter), NOx, HC, CO.

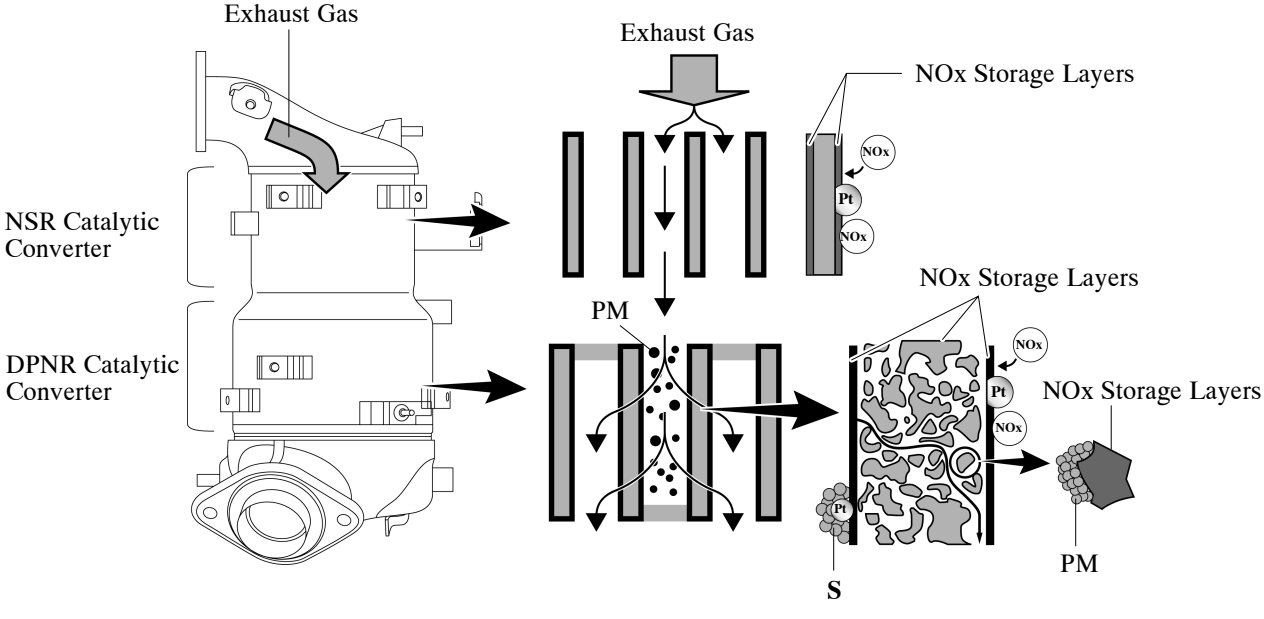

288EG71C

■FUEL SYSTEM

1. General

- The fuel outlet for the exhaust fuel addition injector is added to the supply pump.
- Addition of a pressure discharge valve to the common rail.
- A piezo type injector is used.
- The exhaust fuel addition injector is added for catalyst support control.
- Along with the changes in the common-rail system from the 2AD-FTV engine, the fuel cooler is not used in the 2AD-FHV engine.

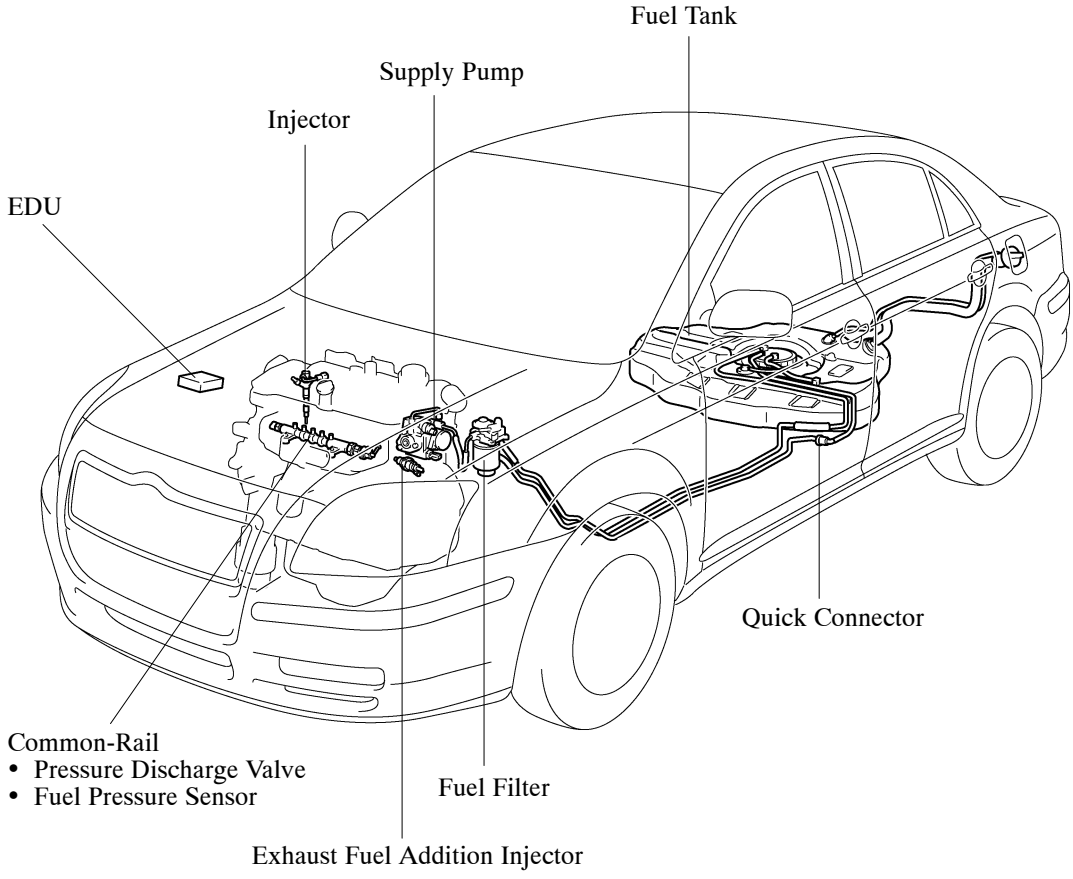

288EG21Y

2. Common-Rail System

General

In this system, the high pressurized fuel that is supplied by the supply pump is stored in the common-rail, and the engine ECU sends signals to the injectors via the EDU (Electronic Driver Unit) in order to control the injection timing and injection volume. For details of this control, see page 98.

▶ System Diagram ◀

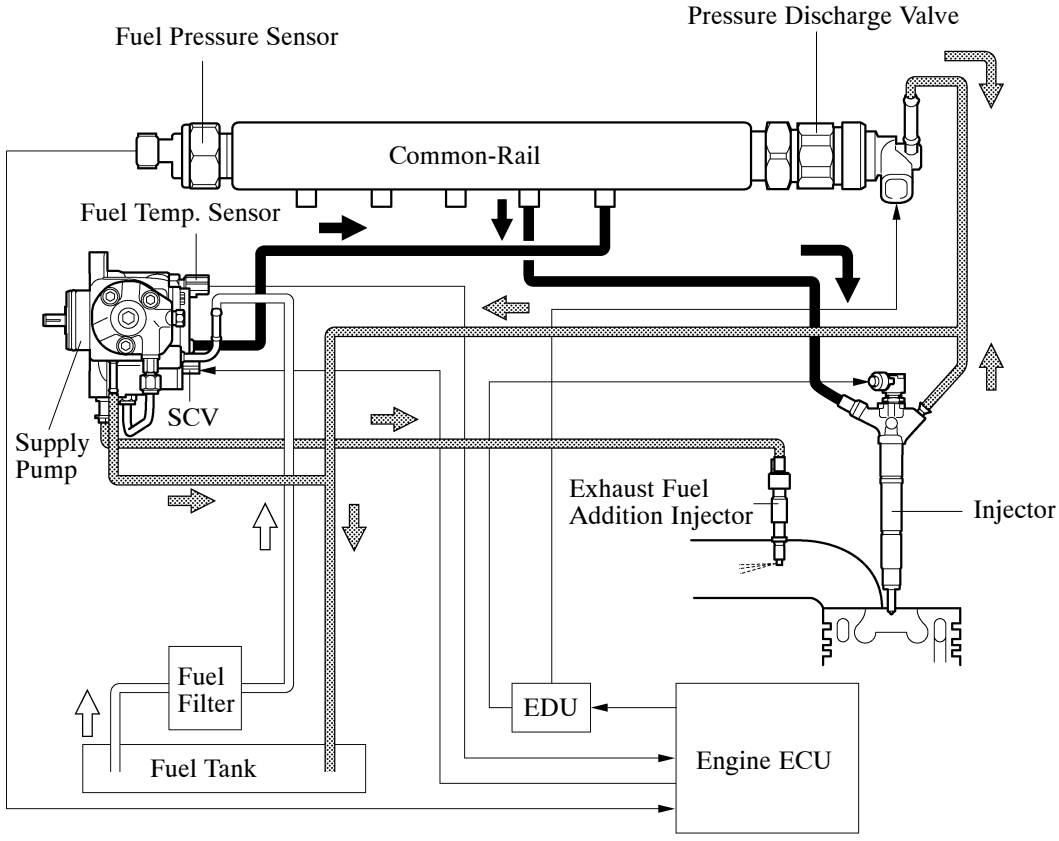

288EG78Y

Supply Pump

The fuel outlet for the exhaust fuel addition injector is added.

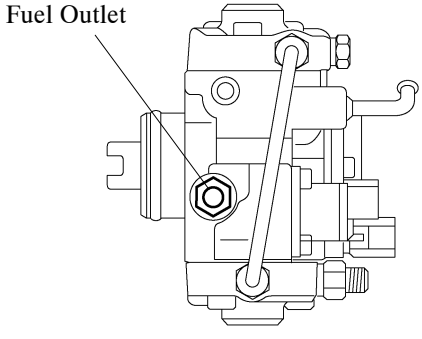

288EG101Y

Common-Rail

- The function of the common-rail is to store the fuel that has been pressurized by the supply pump. The common-rail is provided with a fuel pressure sensor, which detects the fuel pressure in the common-rail, and a pressure discharge valve, which regulates the fuel pressure.
- Internally, the common-rail contains a main hole and five branch holes that intersect the main hole. Each branch hole functions as an orifice that dampens the fluctuation of the fuel pressure.
- In the pressure discharge valve, the plunger opens and closes in accordance with the actuation signals from the EDU. Thus, it regulates pressure by releasing excess pressure from the common-rail. In addition, it has a pressure reduction function in case of emergency.
- For details on the fuel pressure sensor, see page 94.

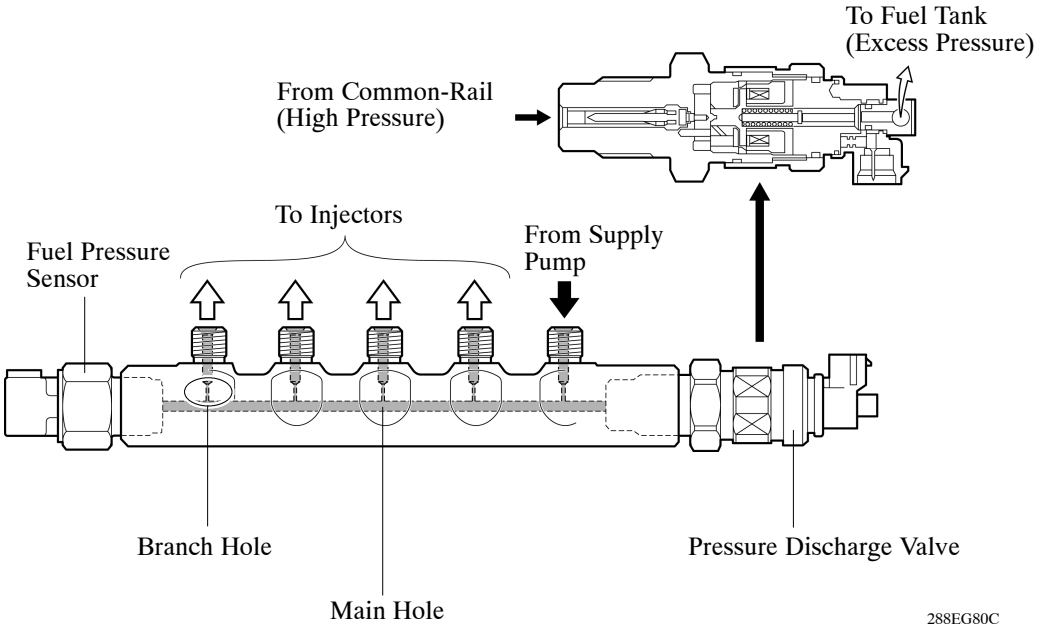

Service Tip

- Fuel pressure sensor has its sealing portion plastic-deformed in order to keep sealing performance, so do not reuse it after disassembling.
- The fuel pressure sensor and pressure discharge valve are supplied as a set with the common-rail.
- Do not disassemble the pressure discharge valve.
- If parts that affect the alignment have been changed, make sure to replace the pipe with a new one as well. The parts that require the replacement of a pipe are listed below.
  Injection Pipe: Injector, Common-rail, Cylinder Head and Intake Manifold
  Fuel Inlet Pipe: Supply Pump, Common-rail, Cylinder Head and Intake Manifold

For details, see the Avensis Repair Manual Supplement (Pub. No. RM1174E).

Injector

1) General

- The actuator in the injector, which operates nozzle needle, is changed to a piezo type for high-speed operation. Along with this change, the fuel injection characteristics are optimized, achieving low emissions, low combustion noise, and high output.
- An injector consists of a nozzle needle, two pistons, three-way valve and piezo actuator.
- An injector compensation value and QR (Quick Response) code containing encoded characteristics of the injector are printed on each injector.
- The injector compensation value and QR code contain various pieces of information regarding the injector, such as model code, and injection volume correction.

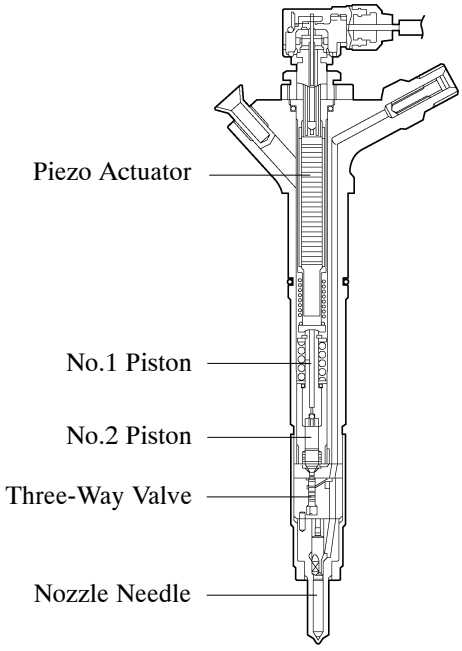

288EG81Y

Service Tip

- If the engine ECU is replace, use the intelligent tester II and input the injector compensation values of all 4 injectors. If one of the injectors is replaced, input the injector compensation value of the replaced injector. Then, the proper compensation will be made so that the injection volume precision prior to the replacement will remain unchanged. For details, see the Avensis Repair Manual Supplement (Pub. No. RM1174E).
- The QR code, which requires a special scan tool, is not used at Toyota dealers.

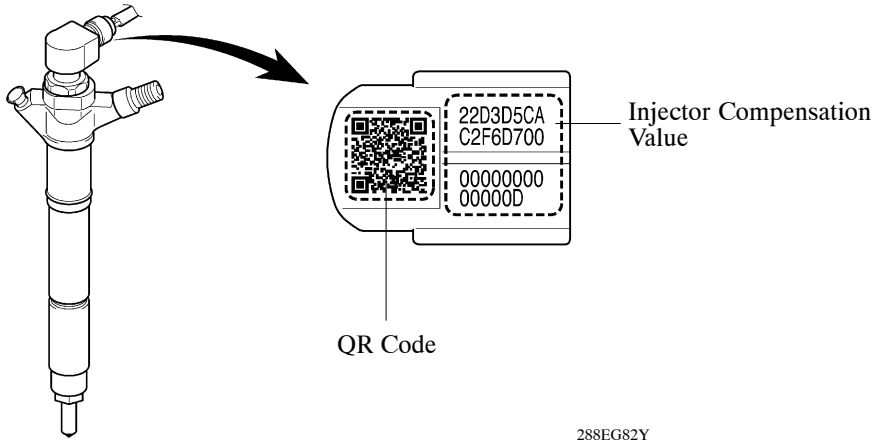

288EG82Y

— REFERENCE —

What is QR (Quick Response) Code?

- *QR code, a matrix symbology consisting of an array of nominally square cells, allows omni-directional, high-speed reading of large amounts of data.*
- *QR code encodes many types of date such as numeric, alphanumeric, kanji, kana and binary code. A maximum of 7,089 characters (numeric) can be encoded.*
- *QR code (2D code) contains information in the vertical and horizontal direction, whereas a bar code contains date in one direction only. QR code (2D code) holds a considerably greater volume of information than a bar code.*

2) Operation

a. During Injection

(1) When current is applied to the piezo actuator, the No.1 piston, No.2 piston and the three-way valve are push down.
(2) The orifice on the upper part of the three-way valve opens and the fuel in the control chamber flows out.
(3) The fuel pressure in the control chamber drops.
(4) As a result, the nozzle needle is pushed up due to fuel pressure, causing fuel injection.

b. While Stopped

(1) Current to the piezo actuator is shut off and the No.1 and No.2 pistons and the three-way valve are pushed up due to spring tension.
(2) The orifice on the upper part of the three-way valve closes to stop fuel flow.
(3) The fuel pressure in the control chamber rises.
(4) As a result, the nozzle needle goes down to stop fuel injection.

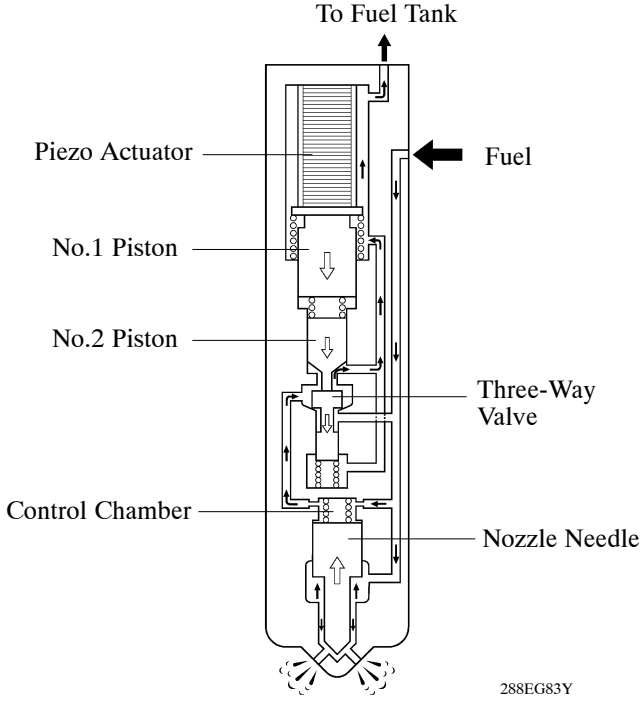

During Injection

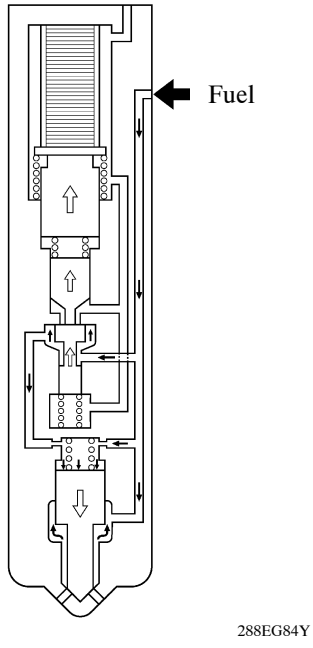

While Stopped

3) Control when idling

The engine ECU reduces injector operation speed and applied voltage to the injector to reduce the sound it produces during idling. To do this, the Engine ECU outputs applied voltage switching signals to terminal IJEN of the EDU from terminal IDLO of the Engine ECU.

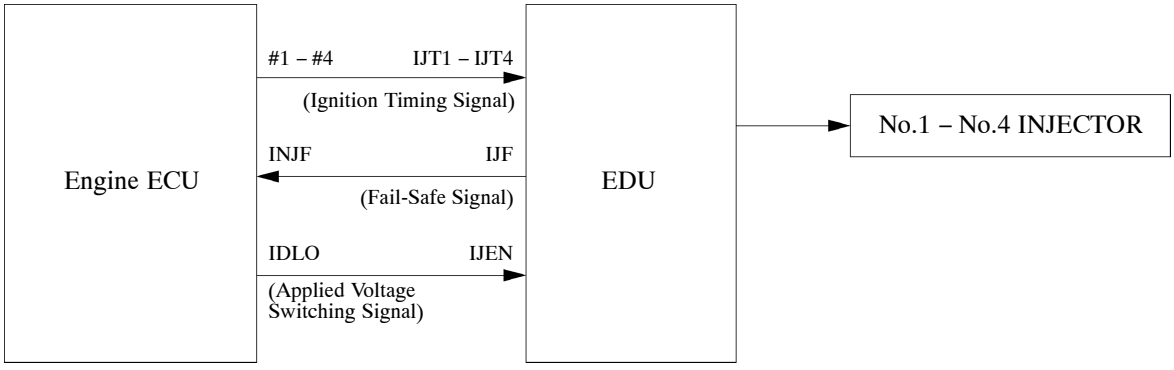

288EG107C

Service Tip

When there is an open circuit between terminal IDLO of the Engine ECU and terminal IJEN of the EDU, DTC (Diagnostic Trouble Code) P1625 is stored in the ECU and the check engine warning light comes on. For details, see the Avensis Repair Manual Supplement (Pub. No. RM1174E).

Exhaust Fuel Addition Injector

- An exhaust fuel addition injector is installed on the No. 4 exhaust port of the cylinder head. This injector supplies additional fuel into the No. 4 exhaust port for the purpose of realizing fuel enrichment (in order to reduce NOx), and maintains the proper catalyst temperature for the purpose of PM (Particulate Matter) recovery and sulfur poison recovery.
- An exhaust fuel addition injector consists of a needle valve body, needle valve, and solenoid valve.

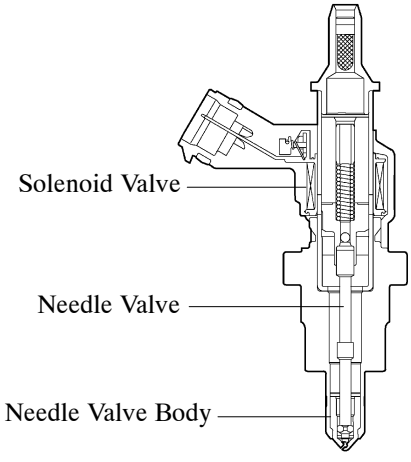

288EG89Y

■ENGINE CONTROL SYSTEM

1. General

The following list shows engine control comparison between 2AD-FHV engine and 2AD-FTV engine. The engine ECU that controls this system is made by DENSO.

System	Outline	2AD-FHV	2AD-FTV
Fuel Injection Volume Control	Based on the signals received from the sensors, the engine ECU determines the fuel injection volume in accordance with the engine condition.	○	○
Fuel Injection Timing Control	Based on the signals received from the sensors, the engine ECU determines the fuel injection timing in accordance with the engine condition.	○	○
Fuel Pressure Control (See page 98)	Based on the signals received from the sensors, the engine ECU controls fuel pressure using the SCV (Suction Control Valve) and pressure discharge valve according to engine conditions.	○	—
	Based on the signals received from the sensors, the engine ECU controls fuel pressure using the SCV according to the engine conditions.	—	○
Pilot Injection Control	Based on the signals received from the various sensors, the engine ECU determines pilot injection volume, timing, and interval (between pilot injection and main injection) in accordance with the engine condition.	○	○
Catalyst Support Control (See page 99)	Based on the signals received from the sensors, the engine ECU controls exhaust fuel addition injector to purify NOx, PM and sulfur.	○	—
Idle Speed Control	The engine ECU determines the idle speed in accordance with the engine condition, and controls the fuel injection volume in order to maintain the target idle speed.	○	○
Glow Plug Control	Controls the length of time when the current is applied to the glow plugs, in accordance with water temperature.	○	○
EGR Control	Based on the signals received from the sensors, the engine ECU determines the EGR volume via EGR valve and diesel throttle control valve in accordance with the engine condition.	—	○
	Based on the signals received from the sensors, the engine ECU determines the EGR volume via EGR valve, EGR cooler bypass switching valve and diesel throttle control valve in accordance with the engine condition.	○	—
Turbo Pressure Control	Based on the signals received from the sensors, the engine ECU controls the actuator via VRV in accordance with the engine condition.	○	○
Intake Throttle Control	• Based on the signals received from the various sensors, the engine ECU determines throttle position in accordance with engine condition. • Fully close the diesel throttle control valve in order to reduce the vibration when the engine is stopped.	○	○
Charging Control (See page 63)	The engine ECU regulates the charging voltage of the alternator in accordance with the driving conditions and the charging state of the battery.	○	○

(Continued)

NF

System	Outline	2AD-FHV	2AD-FTV
Air Fuel Ratio Sensor Heater Control	Maintains the temperature of the air fuel ratio sensor at an appropriate level to increase accuracy of detection of the oxygen concentration in the exhaust gas.	○	—
Air Conditioner Cut-off Control	By controlling the air conditioner compressor ON or OFF in accordance with the engine condition, drivalility is maintained.	○	○
Engine Immobilizer	Prohibits fuel injection if an attempt is made to start the engine with an invalid ignition key.	○	○
Oil Maintenance Management (See page 65)	When the engine ECU determines engine oil deterioration, the engine oil change reminder light turns on to inform the driver.	○	○
Diagnosis (See page 67)	When the engine ECU detects a malfunction, the engine ECU diagnoses and memorizes the failed section.	○	○
Fail-Safe (See page 102)	When the engine ECU detects a malfunction, the engine ECU stops or controls the engine according to the data already stored in the memory.	○	○

2. Construction

The configuration of the engine control system is as shown in the following chart.

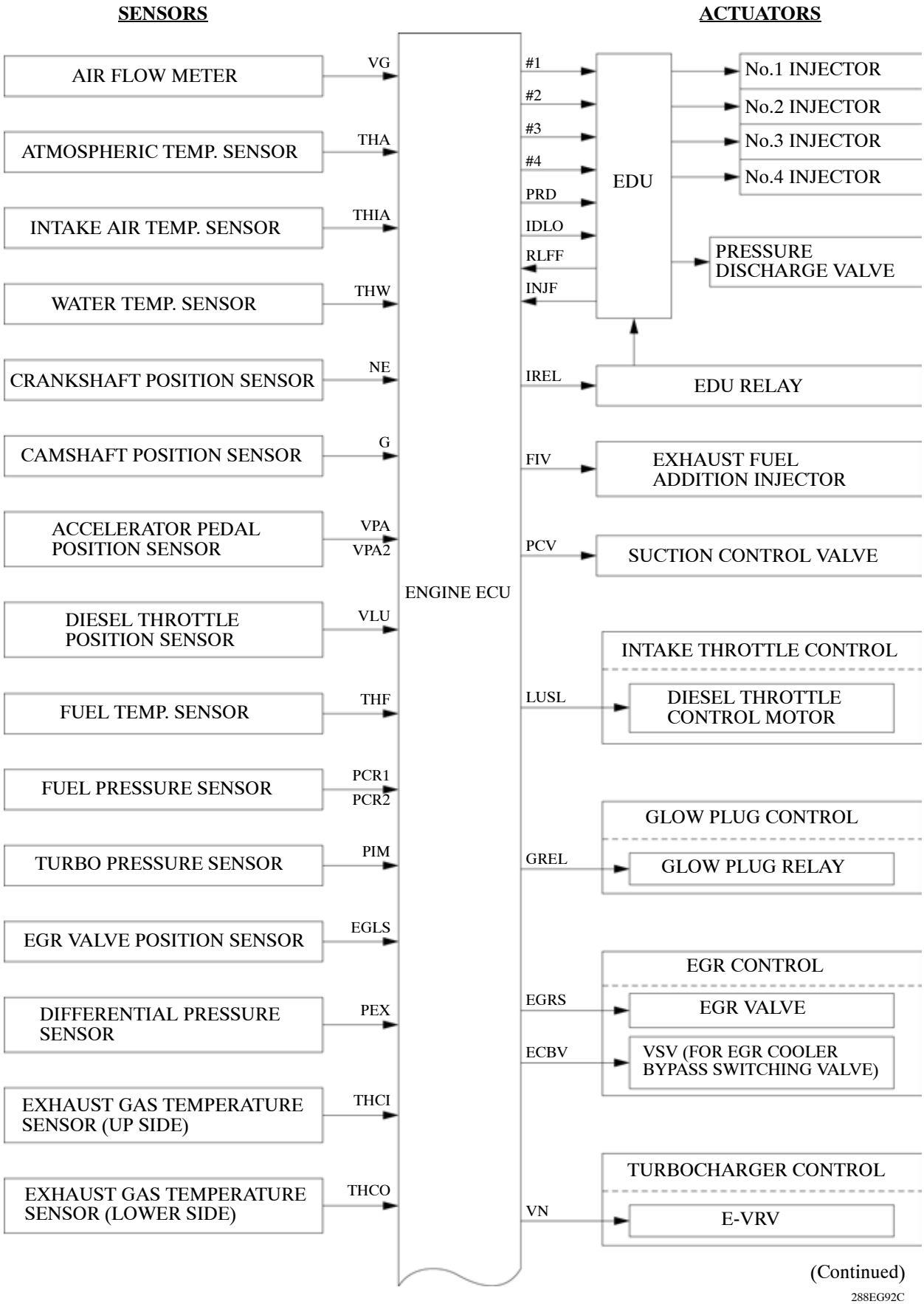

(Continued)

288EG92C

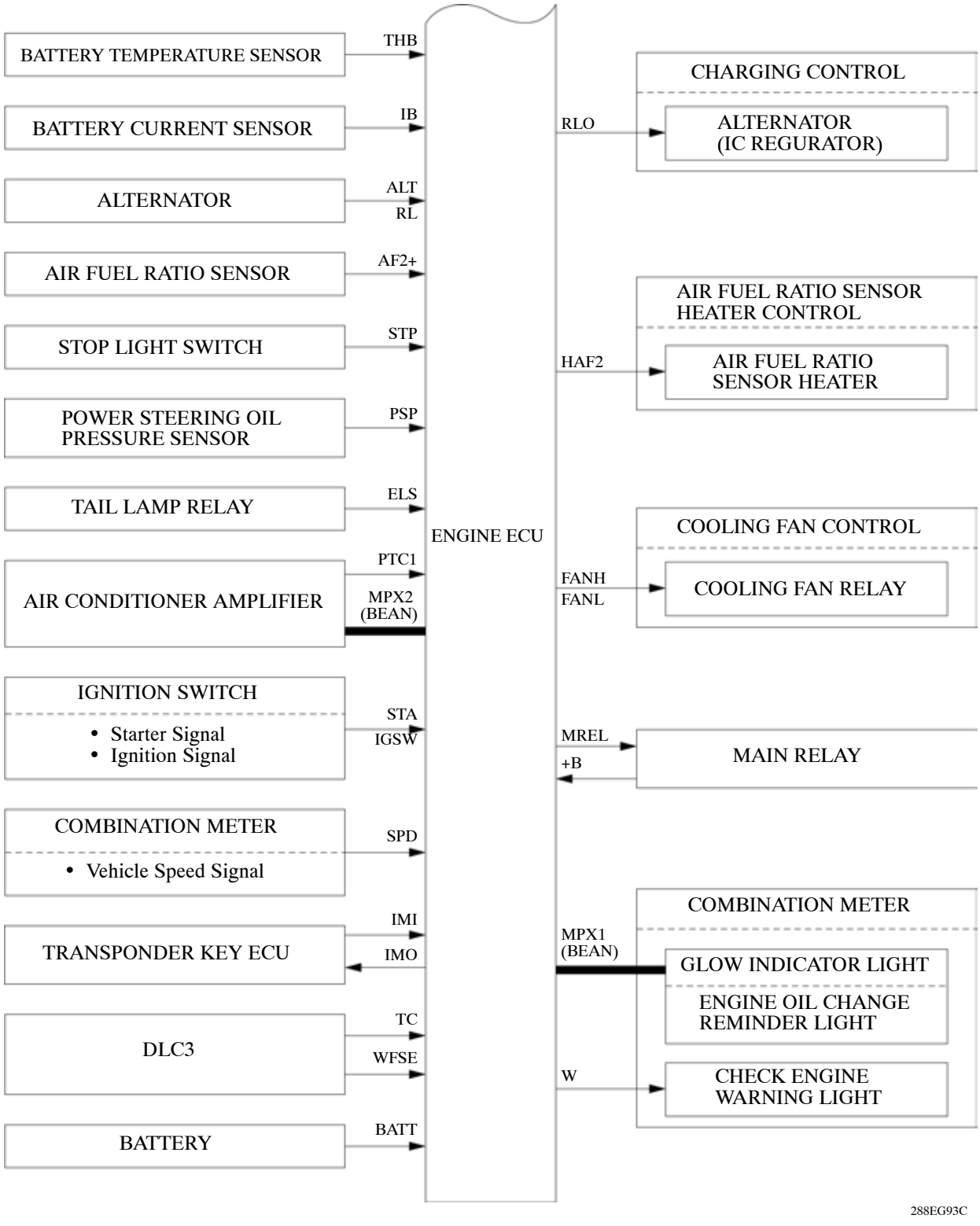
BATTERY TEMPERATURE SENSOR
THB
BATTERY CURRENT SENSOR
IB
ALTERNATOR
ALT
RL
AIR FUEL RATIO SENSOR
AF2+
STOP LIGHT SWITCH
STP
POWER STEERING OIL PRESSURE SENSOR
PSP
TAIL LAMP RELAY
ELS
AIR CONDITIONER AMPLIFIER
PTC1
MPX2 (BEAN)
IGNITION SWITCH
• Starter Signal
• Ignition Signal
STA
IGSW
COMBINATION METER
• Vehicle Speed Signal
SPD
TRANSPONDER KEY ECU
IMI
IMO
DLC3
TC
WFSE
BATTERY
BATT
ENGINE ECU
CHARGING CONTROL
RLO
ALTERNATOR (IC REGURATOR)
AIR FUEL RATIO SENSOR HEATER CONTROL
HAF2
AIR FUEL RATIO SENSOR HEATER
COOLING FAN CONTROL
FANH
FANL
COOLING FAN RELAY
MREL
+B
MAIN RELAY
COMBINATION METER
MPX1 (BEAN)
GLOW INDICATOR LIGHT
ENGINE OIL CHANGE REMINDER LIGHT
W
CHECK ENGINE WARNING LIGHT
288EG93C

3. Engine Control System Diagram

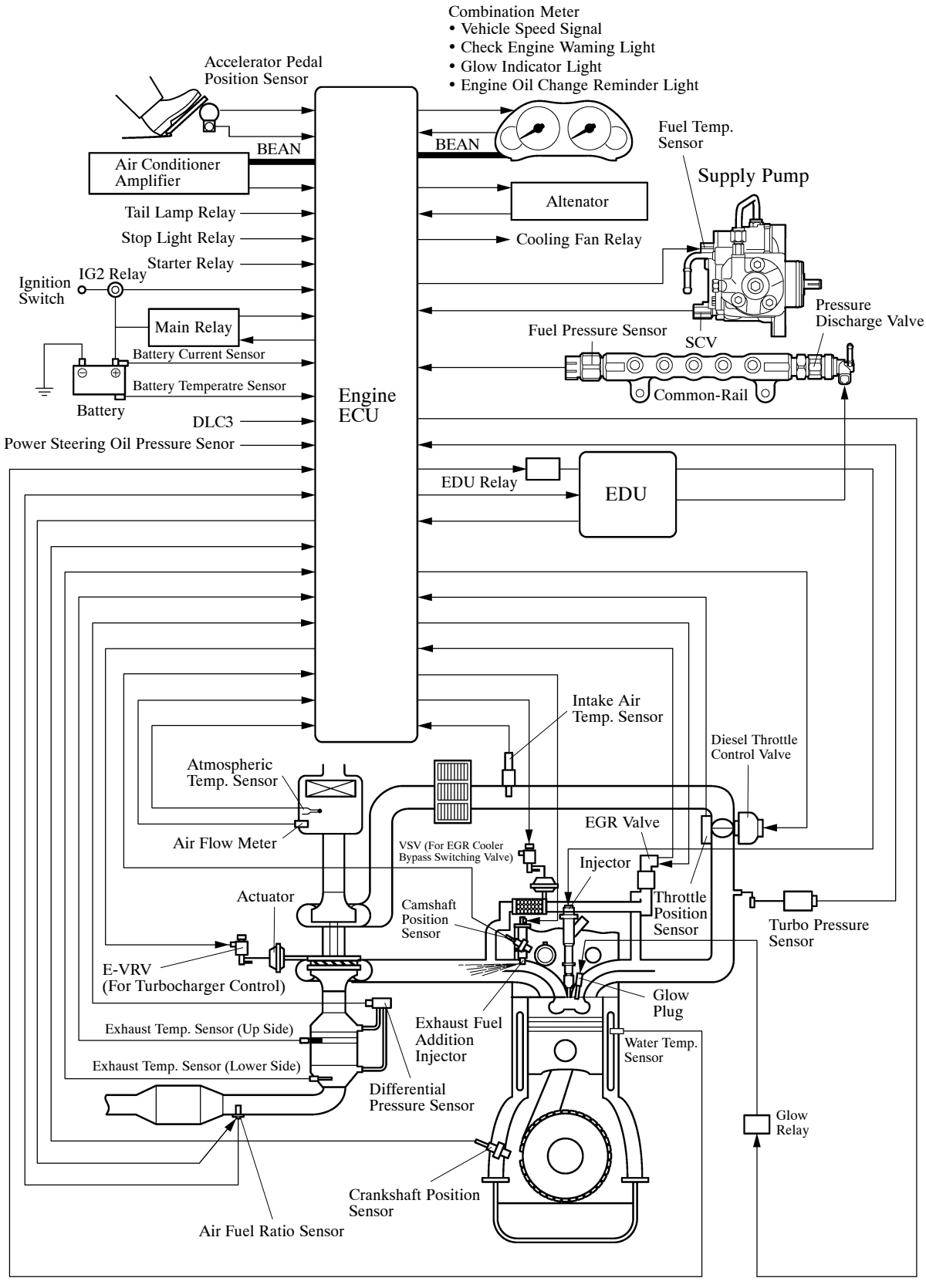

288EG07C

NF

4. Layout of Main Components

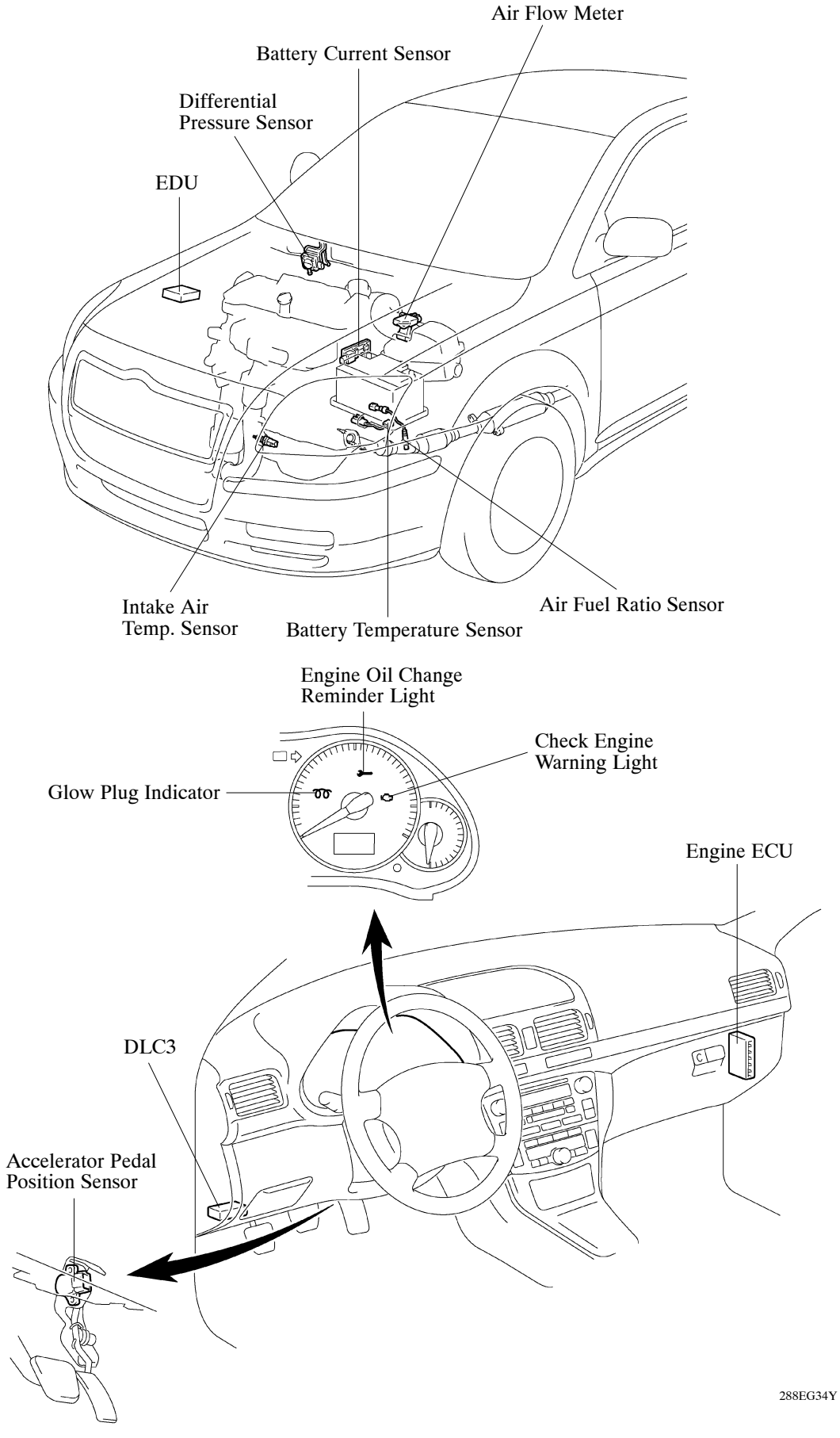

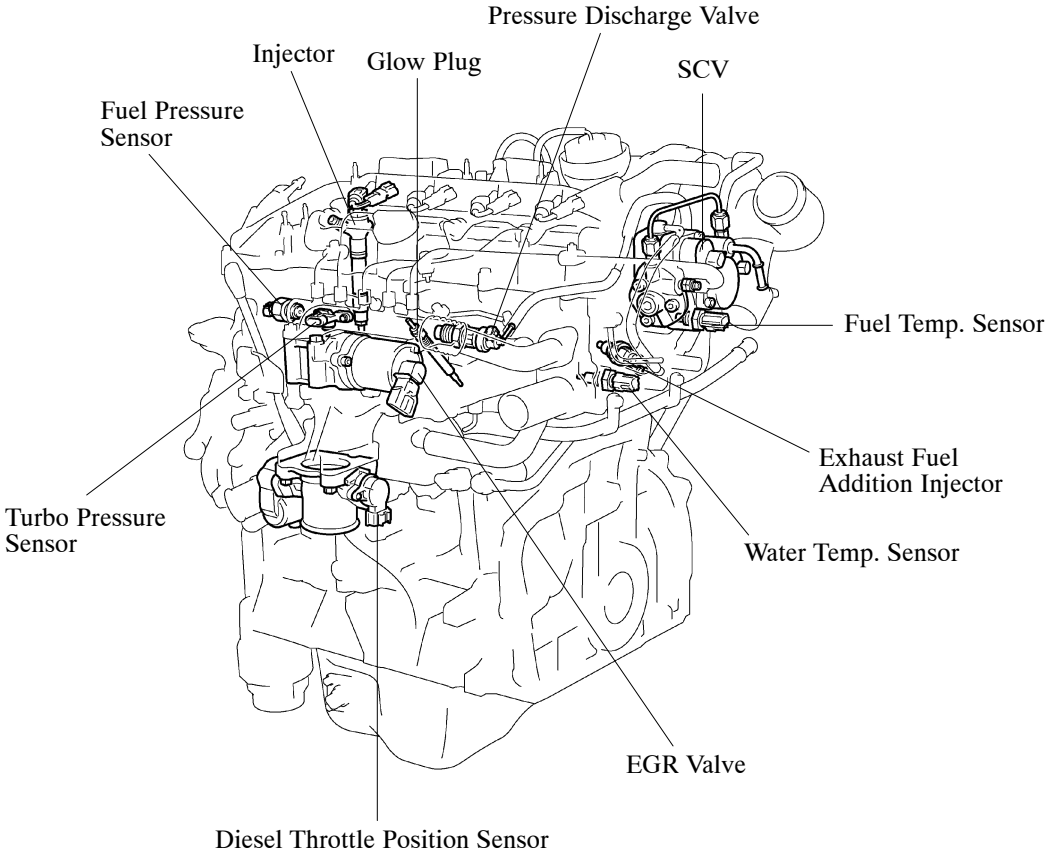
Pressure Discharge Valve
Injector
Glow Plug
SCV
Fuel Pressure Sensor
Fuel Temp. Sensor
Exhaust Fuel Addition Injector
Turbo Pressure Sensor
Water Temp. Sensor
EGR Valve
Diesel Throttle Position Sensor

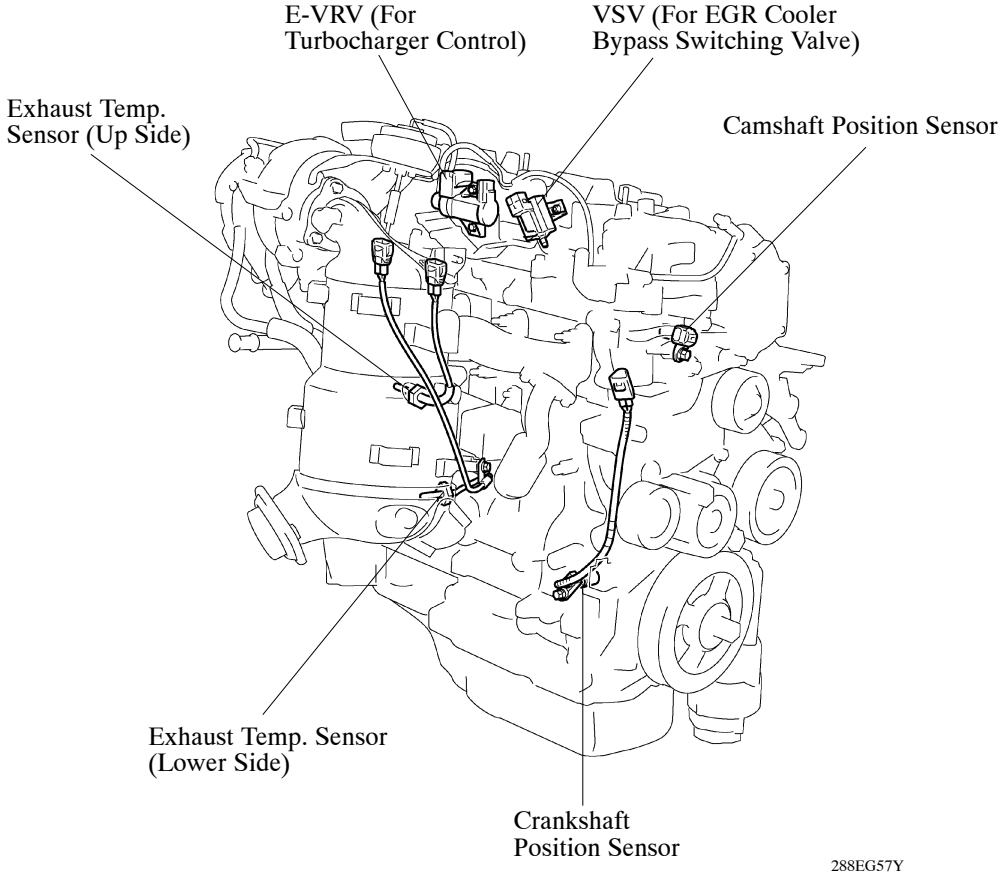
E-VRV (For Turbocharger Control)
VSV (For EGR Cooler Bypass Switching Valve)
Exhaust Temp. Sensor (Up Side)
Camshaft Position Sensor
Exhaust Temp. Sensor (Lower Side)
Crankshaft Position Sensor
288EG57Y

NF

5. Main Component of Engine Control System

General

The main components of the 2AD-FHV engine control system are as follows:

Components		Outline	Quantity
Engine ECU		32-bit CPU	1
EDU		Including a built-in DC-DC converter	1
Air Flow Meter		Hot-wire Type	1
Crankshaft Position Sensor (Rotor Teeth)		Pick-up Coil Type (36 - 2)	1
Camshaft Position Sensor (Rotor Teeth)		Pick-up Coil Type (1)	1
Fuel Pressure Sensor		Semiconductor Strain Gauge Type (Two Circuits Type)	1
Accelerator Pedal Position Sensor		Linear (No-Contact) Type	1
Diesel Throttle Position Sensor		Linear (No-Contact) Type	1
Differential Pressure Sensor		Semiconductor Strain Gauge Type	1
Exhaust Gas Temperature Sensor	Up Side	Thermister Type	1 each
	Lower Side		
Air Fuel Ratio Sensor		Type with heater (Planar Type)	1

Fuel Pressure Sensor

- The fuel pressure sensor outputs a signal that represents the fuel pressure in the common-rail to the engine ECU in order to constantly regulate the fuel at an optimal pressure.
- The fuel pressure sensor contains two circuits (main and sub), which enable the engine ECU to constantly compare the values detected by the two circuits. As a result, highly precise values can be detected, which also enable a higher level of failsafe control.

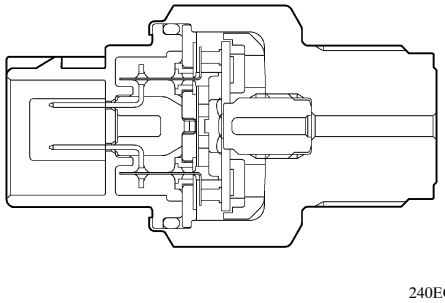

240EG91

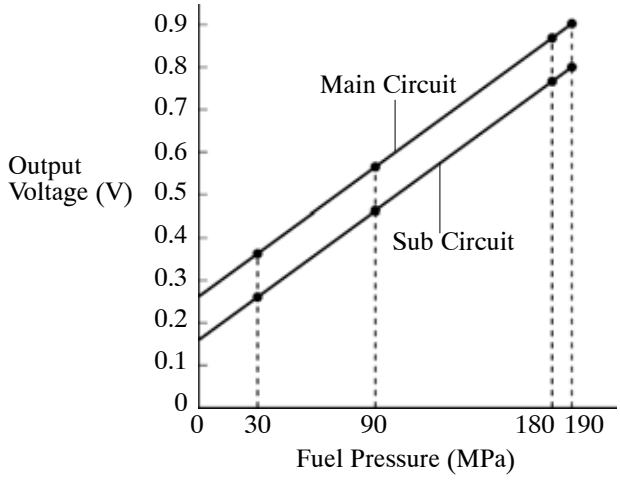

288EG102C

Differential Pressure Sensor

- The differential pressure sensors, which are installed in front and back of the DPNR catalyst, measures the pressure differences between front and back of the DPNR catalyst with PM in order to detect the clogging.
- The sensor is mounted on the dash panel of the engine room side, where the effects of vibration are minimal. The DPNR catalyst and the sensor are connected with pipes and hoses.

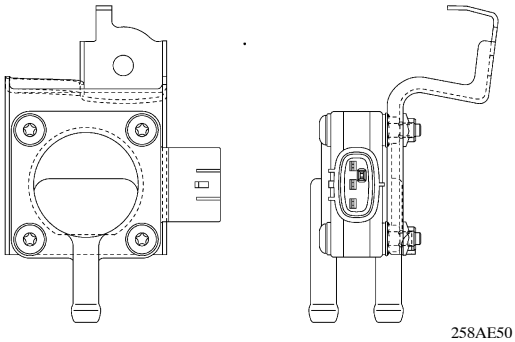

258AE50

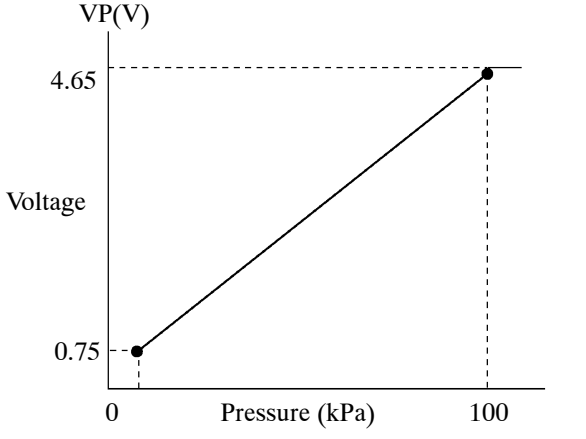

258AE49

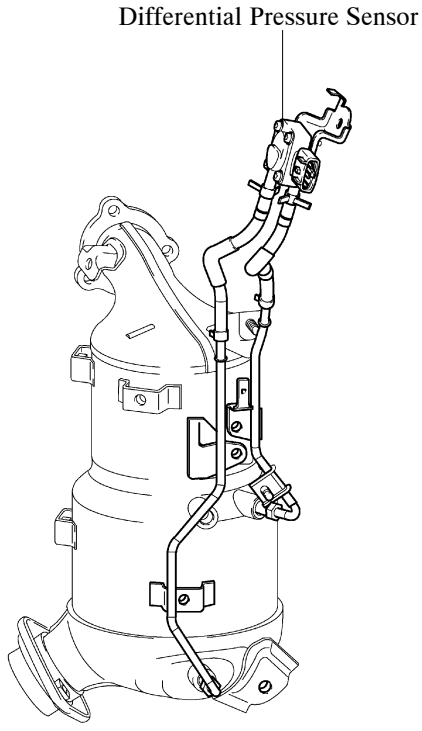

288EG85Y

Exhaust Gas Temperature Sensor

The exhaust gas temperature sensor, which is a thermistor type, is installed in front and back of the DPNR catalyst, in order to detect the temperature of the catalyst.

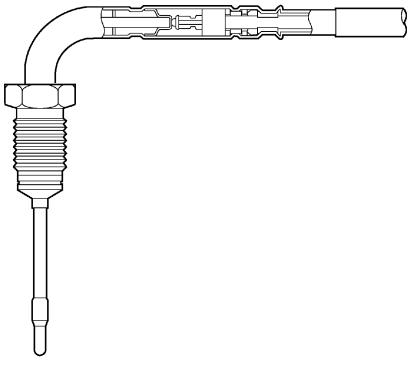

Exhaust Gas Temp. Sensor

258AE40

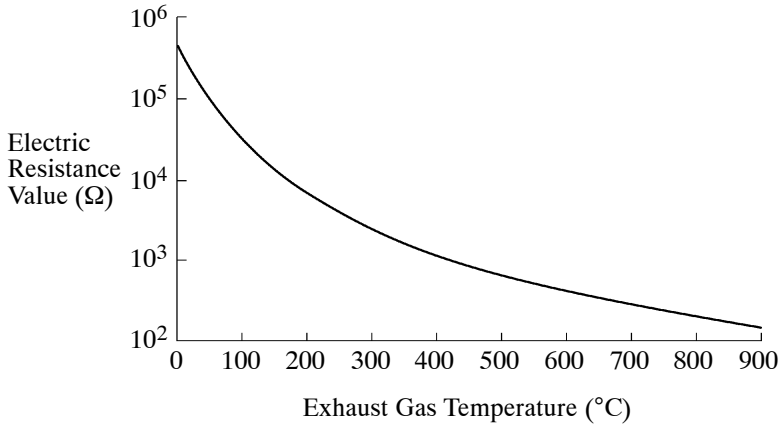

258AE41

Air Fuel Ratio Sensor

1) General

- The planar type air-fuel ratio sensor is used.
- The planar type air-fuel ratio sensor uses alumina, which excels in heat conductivity and insulation, to integrate a sensor element with a heater, thus improving the warm-up performance of the sensor.
- This sensor is based on a sensor that is developed for gasoline engines. Its cover is changed for diesel engine applications in order to eliminate the influences of the sensor temperature and the PM. This sensor, which is mounted after the DPNR catalyst, detects the air-fuel ratio after the gases is reduced.

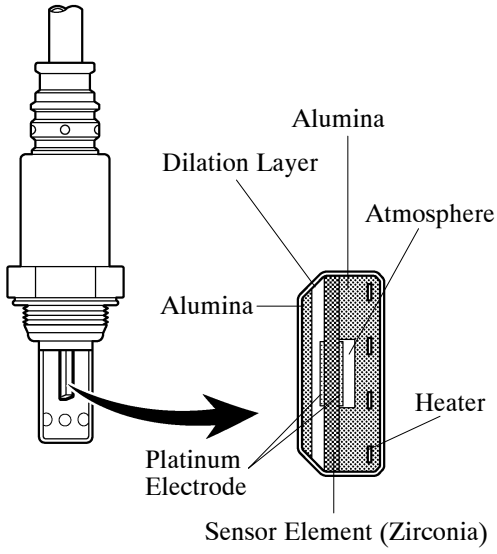

Air Fuel Ratio Sensor (Planar Type)

288EG86Y

2) Characteristics

The air fuel-ratio sensor and the heated oxygen sensor differ in output characteristics.

- The air fuel ratio sensor outputs a voltage that is approximately proportionate to the existing air fuel ratio by converting the oxygen density to the voltage.

As a result, the detection precision of the air fuel ratio is improved.

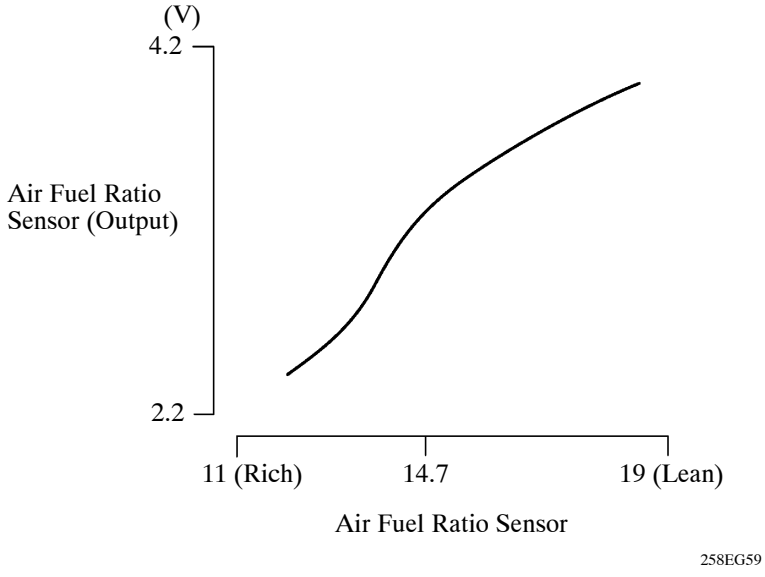

6. Fuel Pressure Control

Engine ECU calculates the target injection pressure (25 – 180 MPa) based on the engine conditions, that are the signals from the accelerator pedal position sensor and the crankshaft position sensor.
To control fuel pressure, signals sent to SCV (Suction Control Valve) of the supply pump regulate the pumping volume and signals sent to pressure discharge valve of the common-rail regulate the discharge volume, so that the pressure detected by the fuel pressure sensor matches the target injection pressure.

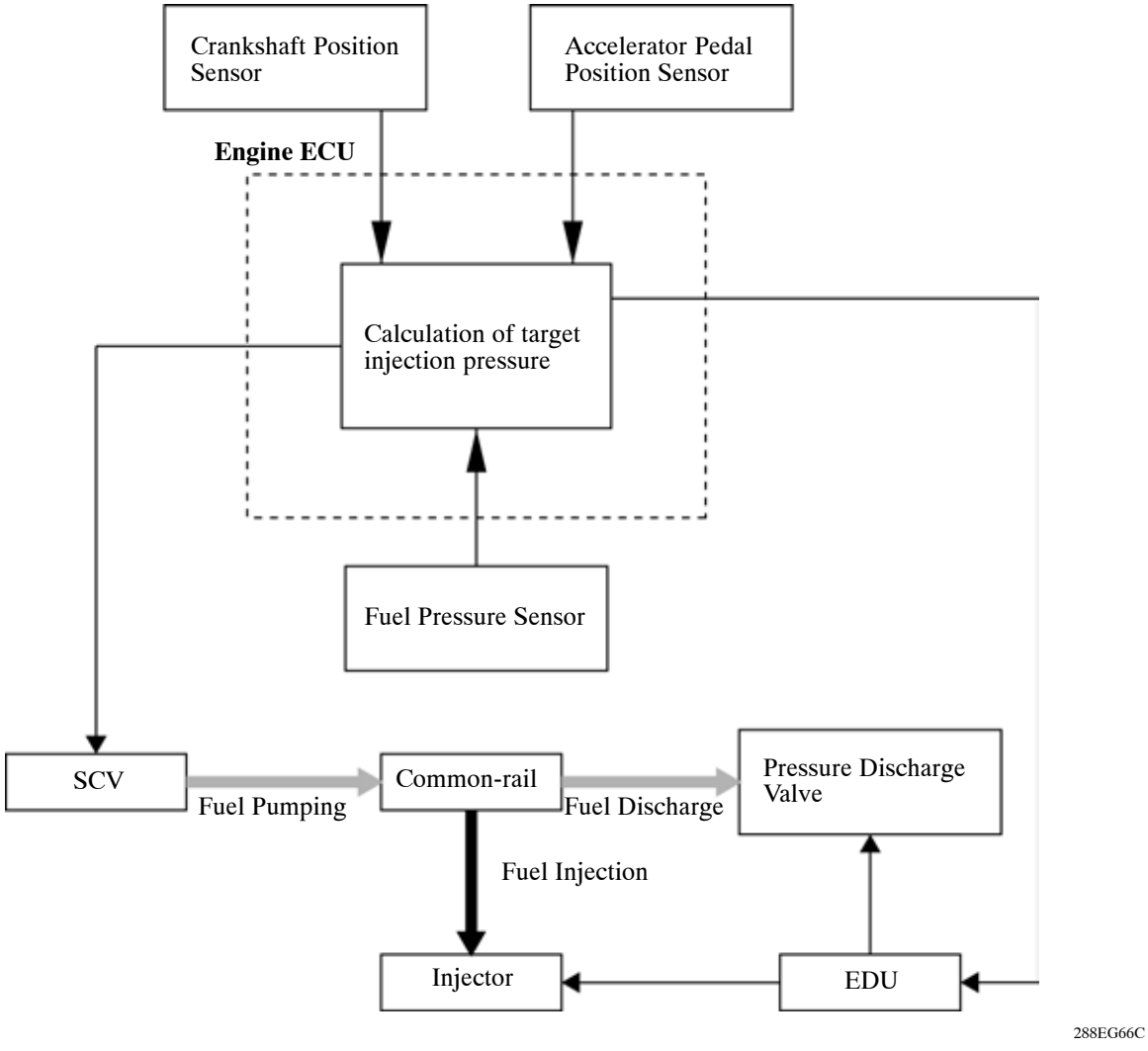

7. Catalyst Support Control

General

The engine ECU judges manifold converter condition based on signals from the air flow meter, water temp. sensor, two exhaust gas temperature sensors, differential pressure sensor, and air fuel ratio sensor to control the injectors and exhaust fuel addition injector for catalyst support control.

- The catalyst support control consists of the NOx reduction control, PM (Particulate Matter = Carbon) reduction control, and sulfur poison recovery control.

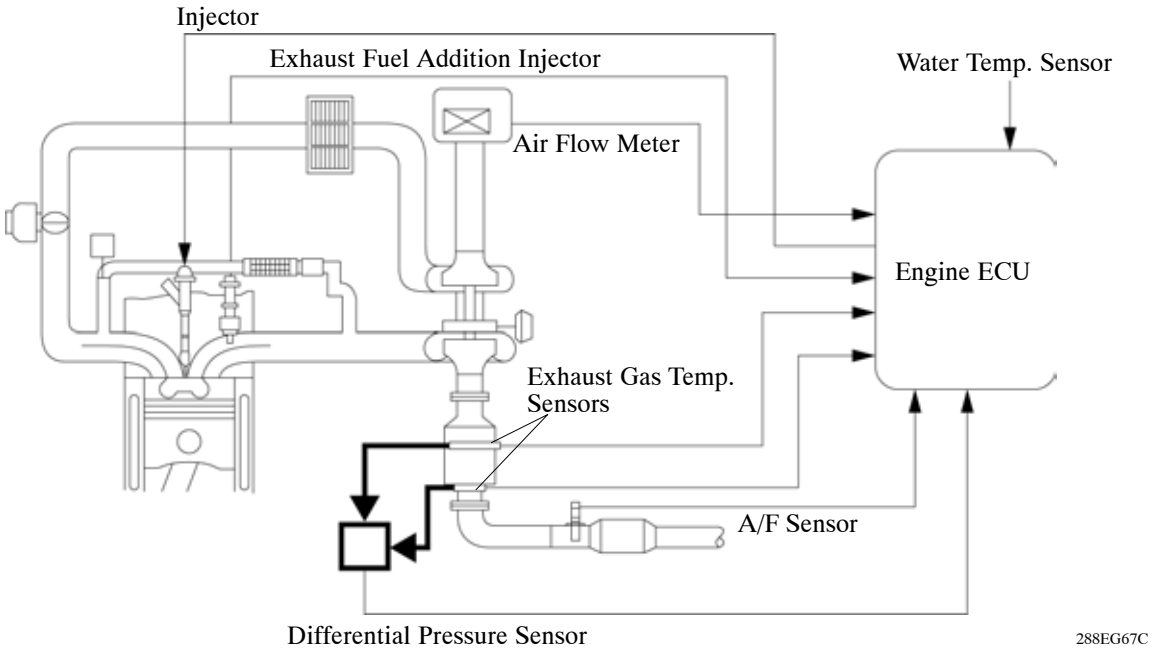

NOx Reduction Control

The engine ECU calculates the amount of NOx in the catalytic converter based on fuel injection volume, intake air volume, and exhaust gas temperature and operates the injectors and exhaust fuel addition injector for NOx reduction control.

As a result of these injectors, the air fuel ratio in the exhaust gas becomes rich to purify NOx.

- Fuel efficiency momentarily drops during this control.

PM Reduction Control

If the DPNR catalyst converter temperature becomes low, catalyst converter performance decreases, resulting in an increase of the amount of PM stuck in the filter substrate. When the engine ECU detects clogs in the filter substrate based on signals from the differential pressure sensor, it operates the injectors and exhaust fuel addition injector for PM reduction.

- As a result of these injectors, the air fuel ratio in the exhaust gas becomes rich and active oxygen is generated by NOx reduction control.
- At the same time, filter substrate temperature becomes high and PM reacts with active oxygen and changes into CO_2 for purification.
- Fuel efficiency drops during this control.

Sulfur Poison Recovery Control

The engine ECU calculates the sulfur volume in the catalyst converter based on the accumulated data of fuel injection volume and operates the injectors and exhaust fuel addition injector for sulfur position recovery control.

As a result of these injectors, the air fuel ratio in the exhaust gas becomes rich for sulfur purification.

- Fuel efficiency drops during this control.

Service Tip

- When replacing the exhaust manifold converter with a new one, it is necessary to perform initialization of the DPNR catalyst deteriorate data history in the Engine ECU by using the intelligent tester II.
- When replacing the engine ECU with a new one, it is necessary to read DPNR catalyst deteriorate data history from the installed Engine ECU and then transfer that data history to the new Engine ECU by using the intelligent tester II. When the DPNR catalyst deteriorate data history is not transferred, DTC (Diagnostic Trouble Code) P1601 is stored in the Engine ECU, and the check engine warning light comes on.
- When replacing both the exhaust manifold converter and the Engine ECU, it is necessary to perform initialization of the DPNR catalyst deteriorate data history in the Engine ECU by using the intelligent tester II. When the DPNR catalyst deteriorate history initialization is not performed, DTC (Diagnostic Trouble Code) P1601 is stored in the Engine ECU and the check engine warning light comes on.

For details, see the Avensis Repair Manual Supplement (Pub. No. RM1174E).

8. EGR Control

By sensing the engine driving conditions, the engine ECU operates the EGR valve, diesel throttle control motor and VSV (for EGR cooler bypass switching valve) and regulates the amount of EGR gas.

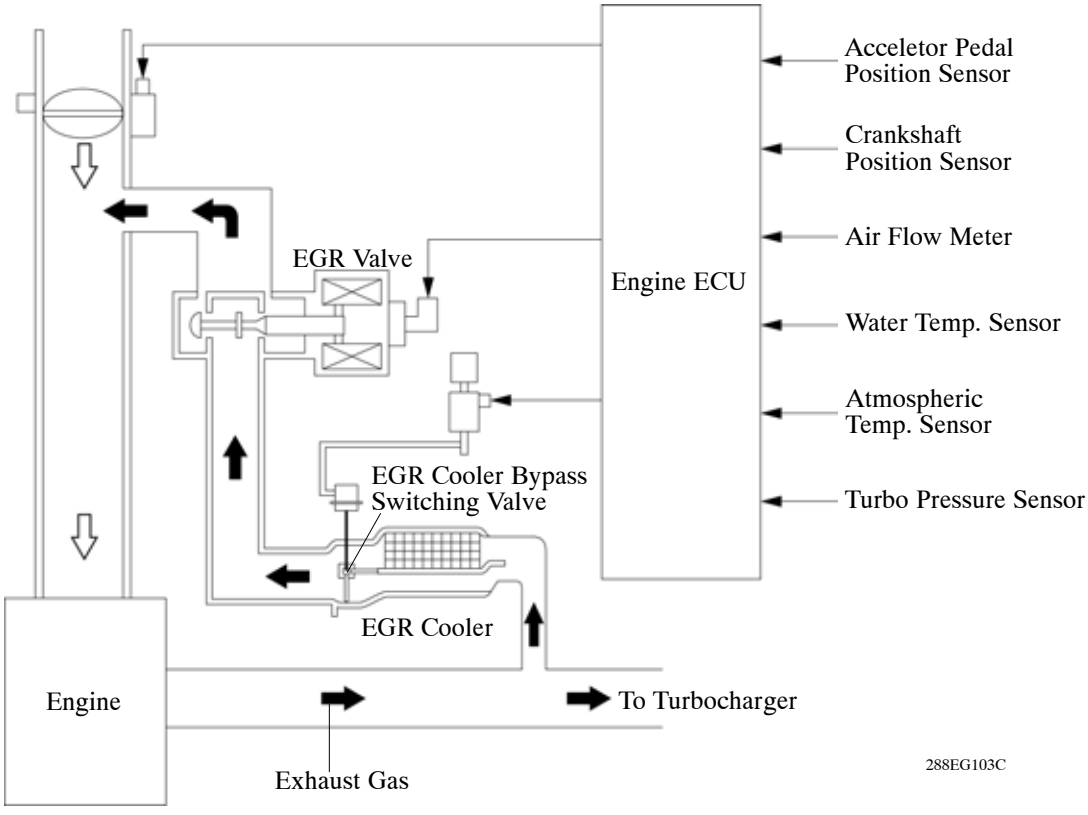

9. Fail-Safe

When the Engine ECU detects a malfunction, the Engine ECU stops or controls the engine according to the data already stored in the memory.

▶ Fail-Safe Chart ◀

DTC	Fail-safe Operation	Fail-safe Deactivation Conditions
P0087	Limits the engine power.	Ignition switch OFF
P0088	Limits the engine power.	Ignition switch OFF
P0093	After shunt driving control is performed for 1 minute, engine stalls.	Ignition switch OFF
P0095, P0097, P0098	Intake air (intake manifold) temperature is fixed at 145°C (293°F).	“Pass” condition detected
P0100, P0102, P0103	Limits the engine power.	“Pass” condition detected
P0105, P0107, P0108	Turbo pressure is fixed value.	“Pass” condition detected
P0110, P0112, P0113	Intake air (built in mass air flow meter) temperature is fixed value.	“Pass” condition detected
P0115, P0117, P0118	Fuel temperature sensor is specified value.	“Pass” condition detected
P0120, P0122, P0123	Limits the engine power.	Ignition switch OFF
P0168	Limits the engine power.	“Pass” condition detected
P0180, P0182, P0183	Fuel temperature is fixed at 40°C (104°F).	“Pass” condition detected
P0190, P0191, P0192, P0193	Limits the engine power.	Ignition switch OFF
P0200	Limits the engine power.	Ignition switch OFF
P0234	Limits the engine power.	Ignition switch OFF
P0335	Limits the engine power.	“Pass” condition detected
P0340	Limits the engine power.	“Pass” condition detected
P0400	Limits the engine power.	Ignition switch OFF
P0405, P0406 P0488	Limits the engine power.	Ignition switch OFF
P0500	Vehicle speed is fixed at 0 km/h (0 mph).	“Pass” condition detected
P0544, P0545 P0546	Limits the engine power.	Ignition switch OFF
P0627	Limits the engine power.	“Pass” condition detected
P1229	Limits the engine power.	Ignition switch OFF
P1251	Limits the engine power.	Ignition switch OFF
P1271	Limits the engine power.	Ignition switch OFF

(Continued)

DTC	Fail-safe Operation	Fail-safe Deactivation Conditions
P1272	Limits the engine power.	Ignition switch OFF
P1386	• Low or excess fuel addition volume: No fail-safe operation. • Low fuel addition volume: Limits the engine power (Driving at engine speed of up to approximately 80 km/h [50 mph] is permitted). • Stuck open Limits the engine power (Driving at engine speed of up to approximately 10 km/h [6 mph] is permitted).	Ignition switch OFF
P1425, P1427, P1428	Differential pressure is fixed value.	Ignition switch OFF
P1611	Limits the engine power.	Ignition switch OFF
P2002	Limits the engine power.	Ignition switch OFF
P2031, P2032, P2033	Limits the engine power.	Ignition switch OFF
P2120, P2121, P2122, P2123, P2125, P2127, P2128, P2138	Limits the engine power.	Ignition switch OFF
P2226, P2228, P2229	Atmospheric pressure is fixed value.	“Pass” condition detected

CLUTCH

■ DESCRIPTION

Models with 2AD-FTV/2AD-FHV engines have a clutch system with the following features.

- A dry type single plate clutch which is operated by hydraulic pressure is used.
- The clutch pedal uses a turnover mechanism to reduce clutch pedal effort.
- The self-adjusting type clutch cover is used to ensure a comfortable clutch feel.

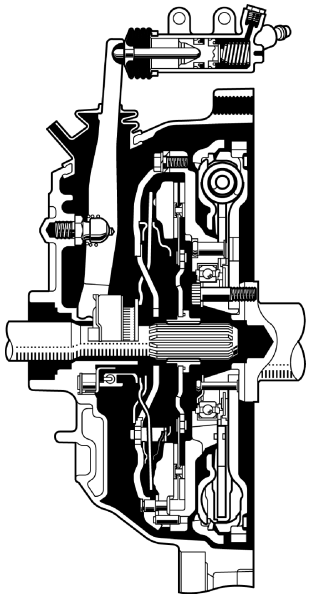

288NF01C

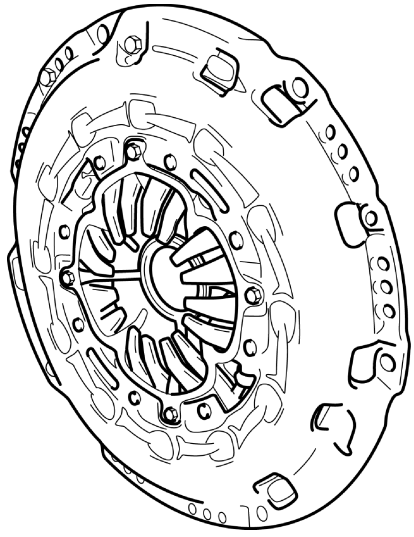

288NF02C

Self-Adjusting Type Clutch Cover

Service Tip

Make sure to replace the clutch cover whenever the clutch disc is replaced. If the clutch disc is replaced without replacing the clutch cover, a proper diaphragm spring posture cannot be attained, which could cause the clutch to slip and make it more difficult to operate the clutch.

▶ **Specification** ◀

Engine			2AD-FTV	2AD-FHV
Clutch System	Type		Dry Type Single Plate Clutch, Diaphragm Spring	←
	Operation		Hydraulic	←
Clutch Cover	Type		DST*1 with Self-Adjusting	←
	Size	mm (in.)	240 (9.4)	←
	Installed Load	N	8800	10800
Clutch Disc	Facing Size*2	mm (in.)	240 × 155 × 3.75 (9.4 × 6.1 × 0.15)	←
	Facing Area	cm^2 ($in.^2$)	264 (40.9)	←
Master Cylinder	Type		Conventional	←
	Material		Plastic	←
	Cylinder Dia.	mm (in.)	15.87 (0.62)	←
Release Cylinder	Type		Non-adjustable	←
	Cylinder Dia.	mm (in.)	22.2 (0.87)	←
Clutch Pedal			Turnover	←

*1: DST (Diaphragm Spring Turnover)
*2: Outer Diameter × Inner Diameter × Thickness

NF

■SELF-ADJUSTING TYPE CLUTCH COVER

1. General

Self-adjusting type clutch cover maintains a constant diaphragm spring posture regardless of the amount of the clutch disc wear. Consequently, it maintains the clutch pedal effort constant to ensure a comfortable clutch feel.

▶ **Specification** ◀

Engine			2AD-FTV	2AD-FHV
Clutch System	Type		Dry Type Single Plate Clutch, Diaphragm Spring	←
	Operation		Hydraulic	←
Clutch Cover	Type		DST*1 with Self-Adjusting	←
	Size	mm (in.)	240 (9.4)	←
	Installed Load	N	8800	10800
Clutch Disc	Facing Size*2	mm (in.)	240 × 155 × 3.75 (9.4 × 6.1 × 0.15)	←
	Facing Area	cm^2 ($in.^2$)	264 (40.9)	←
Master Cylinder	Type		Conventional	←
	Material		Plastic	←
	Cylinder Dia.	mm (in.)	15.87 (0.62)	←
Release Cylinder	Type		Non-adjustable	←
	Cylinder Dia.	mm (in.)	22.2 (0.87)	←
Clutch Pedal			Turnover	←

*1: DST (Diaphragm Spring Turnover)
*2: Outer Diameter × Inner Diameter × Thickness

NF

■SELF-ADJUSTING TYPE CLUTCH COVER

1. General

Self-adjusting type clutch cover maintains a constant diaphragm spring posture regardless of the amount of the clutch disc wear. Consequently, it maintains the clutch pedal effort constant to ensure a comfortable clutch feel.

2. Major Difference

A major difference between the self-adjusting type clutch cover and the conventional clutch cover is the support mechanism for the diaphragm spring.

- Conventional type uses a pivot ring to support the diaphragm spring.
- Self-adjusting type uses a sensor spring and an adjust ring to support the diaphragm spring.

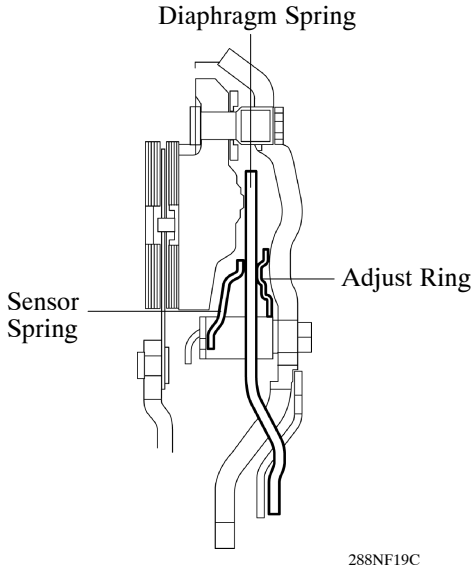

Self-adjusting Type

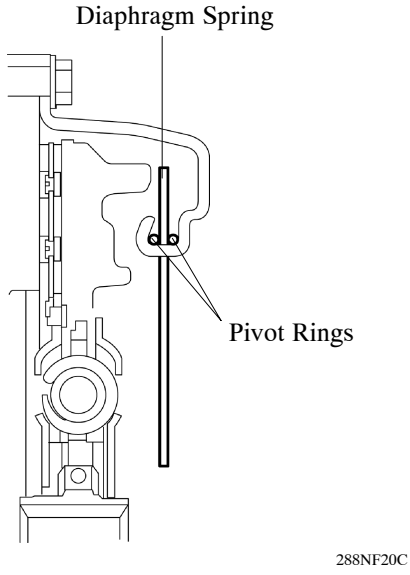

Conventional Type

3. Construction and Operation

Self-adjusting mechanism consists of the diaphragm spring, sensor spring, adjust ring, and coil spring.

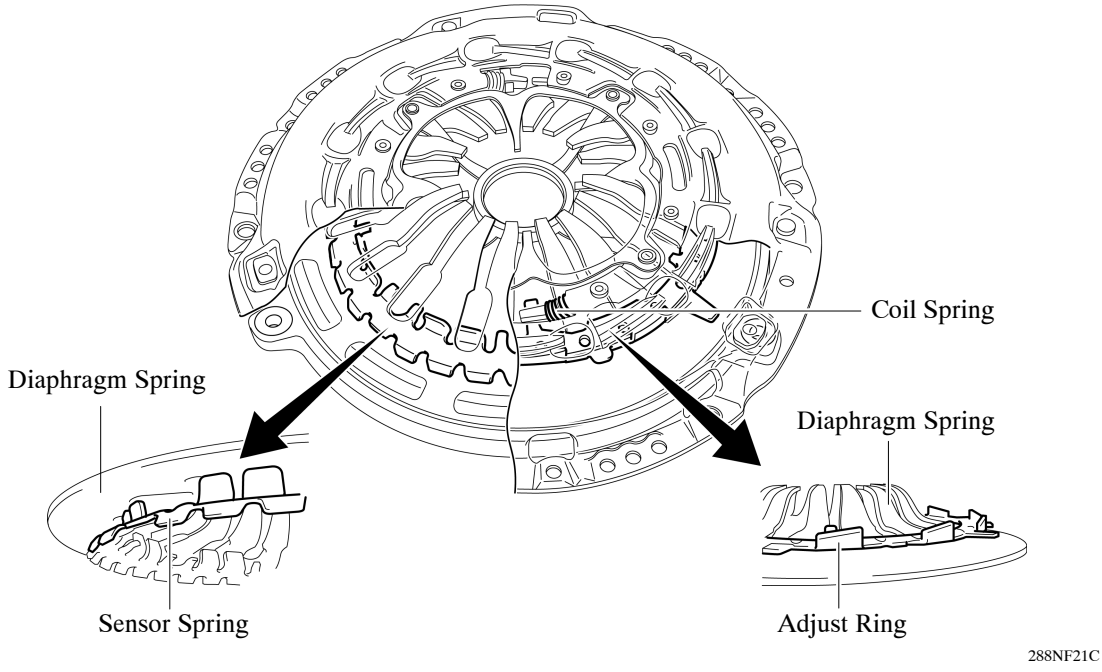

The self-adjusting mechanism operates as follows:

- When the clutch disc wears, the pressure plate will move in the direction shown by arrow A. The height of the tip of the diaphragm spring will also increase in the direction shown by arrow B, resulting in a change in the diaphragm spring posture. This will increase the installed load of the diaphragm spring applied to the sensor spring.
- When the installed load becomes excessive, the sensor spring will deform.
- The clearance between the diaphragm spring and adjust ring will increase due to the deformation of the sensor spring.

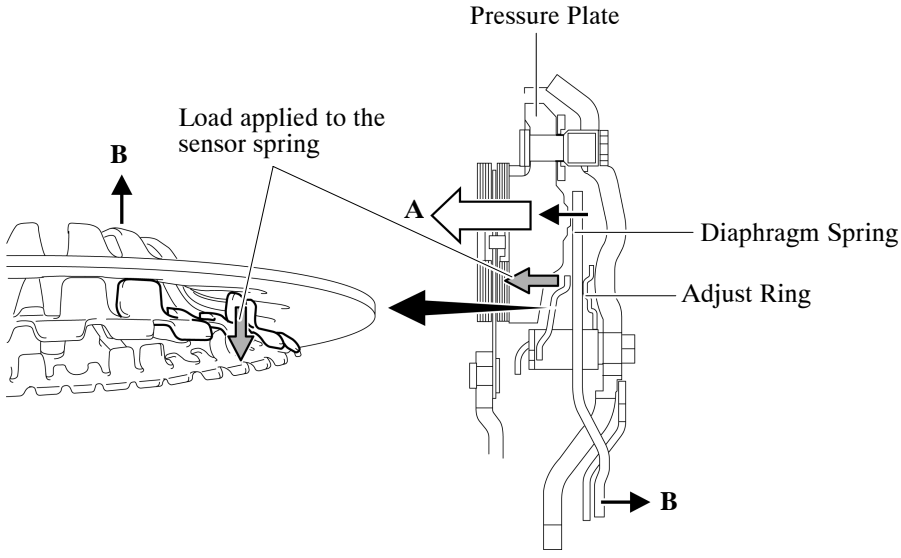

288NF22C

- However, the coil spring of the clutch cover will rotate the adjust ring, eliminating this clearance.
- The diaphragm spring posture will be maintained by this mechanism, realizing a constant pedal effort.

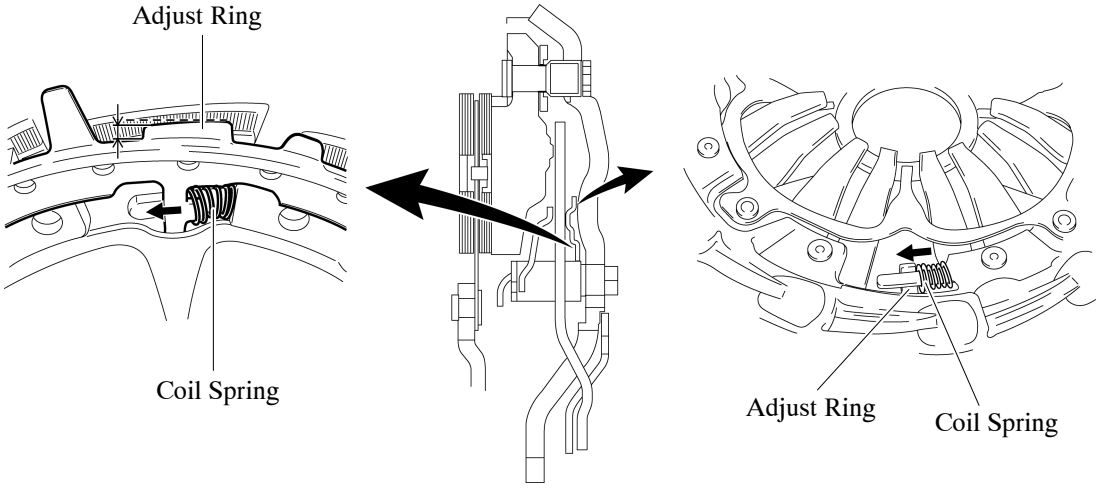

288NF25C

MANUAL TRANSAXLE

■ EA60 AND EA61 MANUAL TRANSAXLE

1. General

EA60/EA61 manual transaxles are newly developed 6-speed manual transaxles. These transaxles realize a compact construction and excellent shift feeling due to the following items.

Feature	Item
Compact Construction	• Twin (No.1 and No.2) output shafts are used. • The 4th & 5th and 1st & reverse drive gears share.
Excellent Shift Feeling	• Multi-cone type (for 1st to 4th) and lever type (for reverse) synchromesh mechanisms are used. • Constant mesh type reverse gear is used. • Slide ball bearings are used for the shift fork shafts and shift & select lever shaft. • Rolling type rock ball is used for shift & select lever shaft.

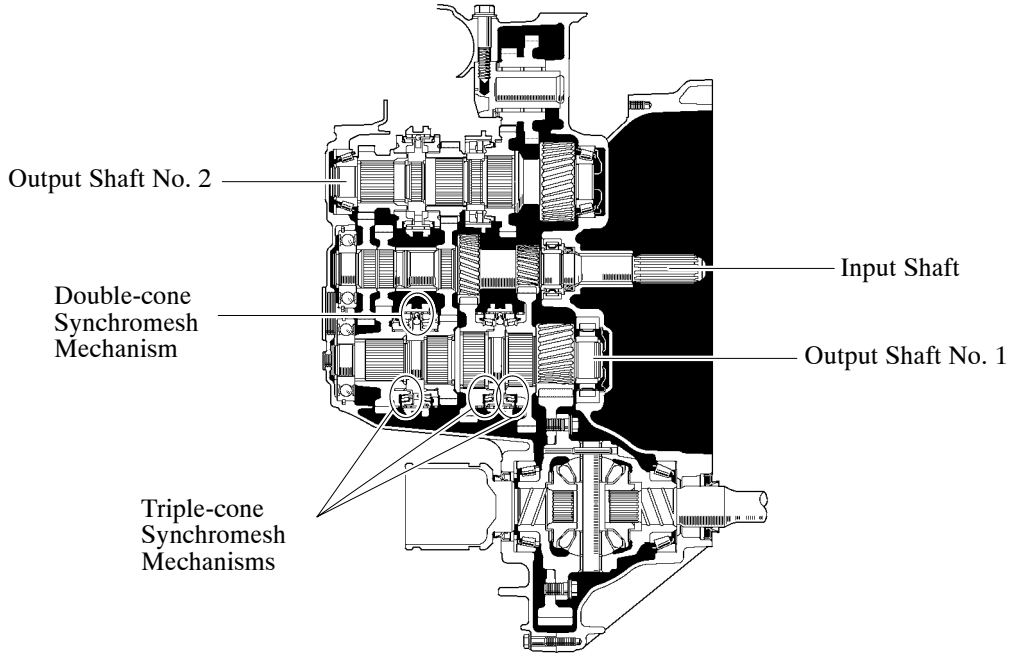

288NF03Y

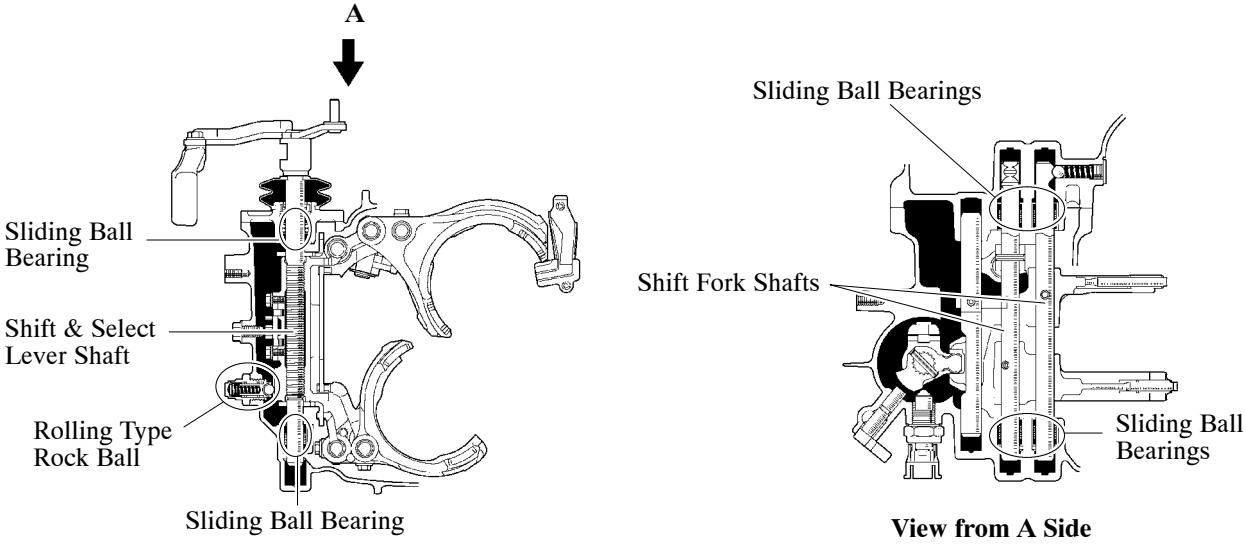

EA60 and EA61 Manual Transaxles 288NF04Y

▶ Specification ◀

Transaxle Type		**EA60**	**EA61**
Engine Type		2AD-FHV	2AD-FTV
Gear Ratio	1st	3.538	←
	2nd	1.913	←
	3rd	1.218	←
	4th	0.860	←
	5th	0.790	←
	6th	0.638	0.673
	Reverse	3.831	←
Differential Gear Ratio	For 1st to 4th	3.777	←
	For 5th, 6th, Reverse	3.238	←
Oil Capacity	Liters (US qts, Imp. qts)	2.3 (2.4, 2.0)	←
Oil Viscosity		SAE 75W	←
Oil Grade		API GL-4	←
Weight (Reference)*	kg (lb)	65 (143.3)	←

*: Weight shows the figure with the oil fully filled.

2. Transmission Gear

General

Gear layout consists of the input shaft, output shaft No. 1, output shaft No. 2 and reverse idler gear.

- The output shafts No.1 and No.2 are placed on the circumference of the differential ring gear.
- The reverse idler gear is engaged with the 1st & reverse drive gear of the input shaft and the reverse driven gear of output shaft No.2.

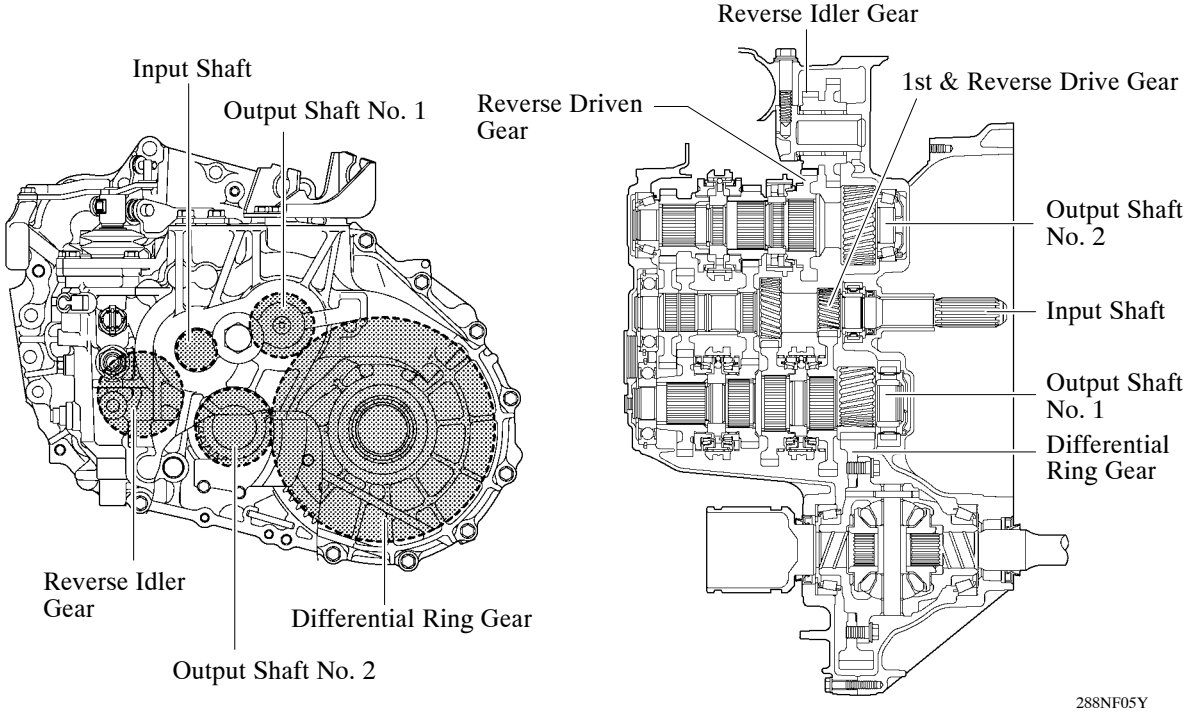

The 1st, 2nd, 3rd, and 4th driven gears are located on output shaft No.1, and the 5th, 6th, and reverse driven gears are located on output shaft No.2. Synchromesh mechanism is used a single-cone, double-cone, triple-cone, and lever single-cone types.

- A triple-cone type and double-cone type synchromesh mechanisms are used to reduce the shifting effort and smoother shifting.
- The lever single-cone type synchromesh mechanism is used for the reverse gear to enhance the ease of operation.

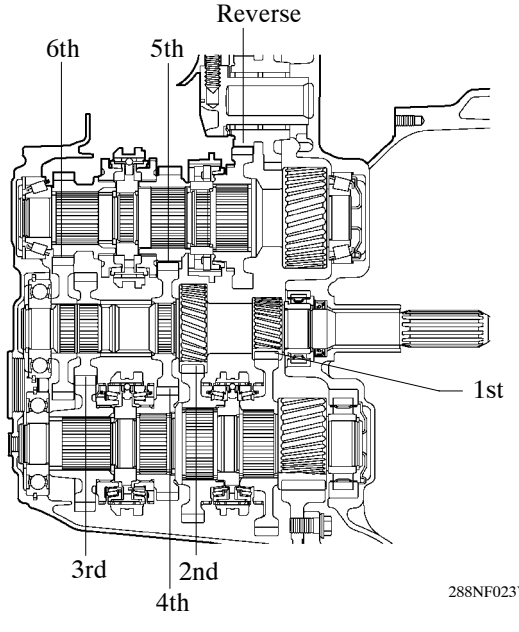

Gear	Synchromesh Mechanism Type
1st	Triple-cone
2nd	
3rd	
4th	Double-cone
5th	Single-cone
6th	
Reverse	Lever Single-cone

Transmission Power Flow

1) 1st Gear

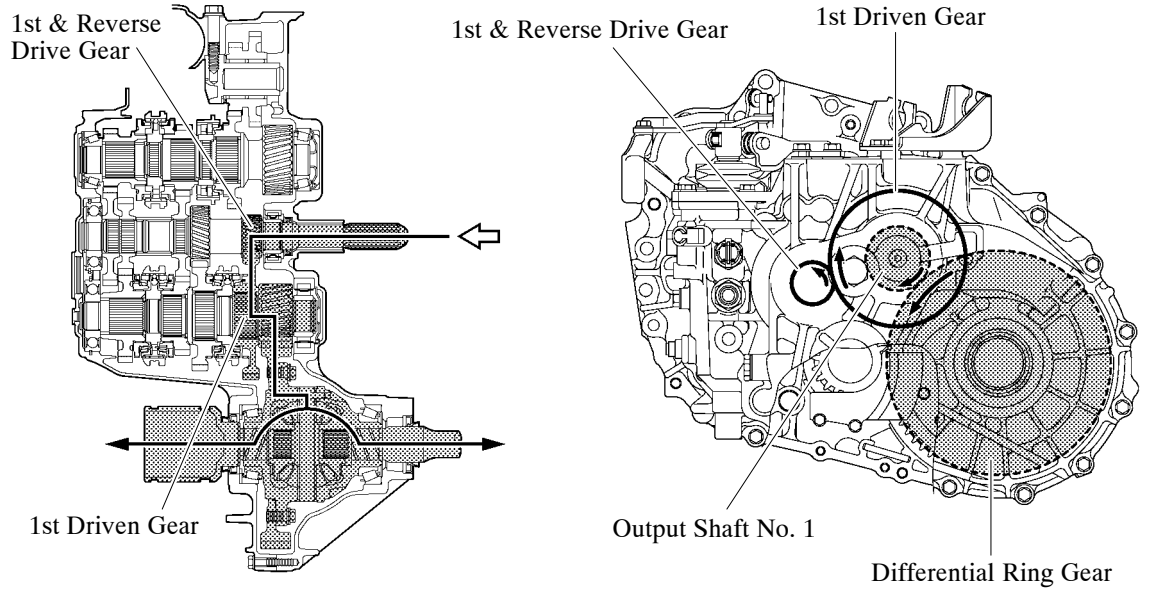

288NF06Y

2) 2nd Gear

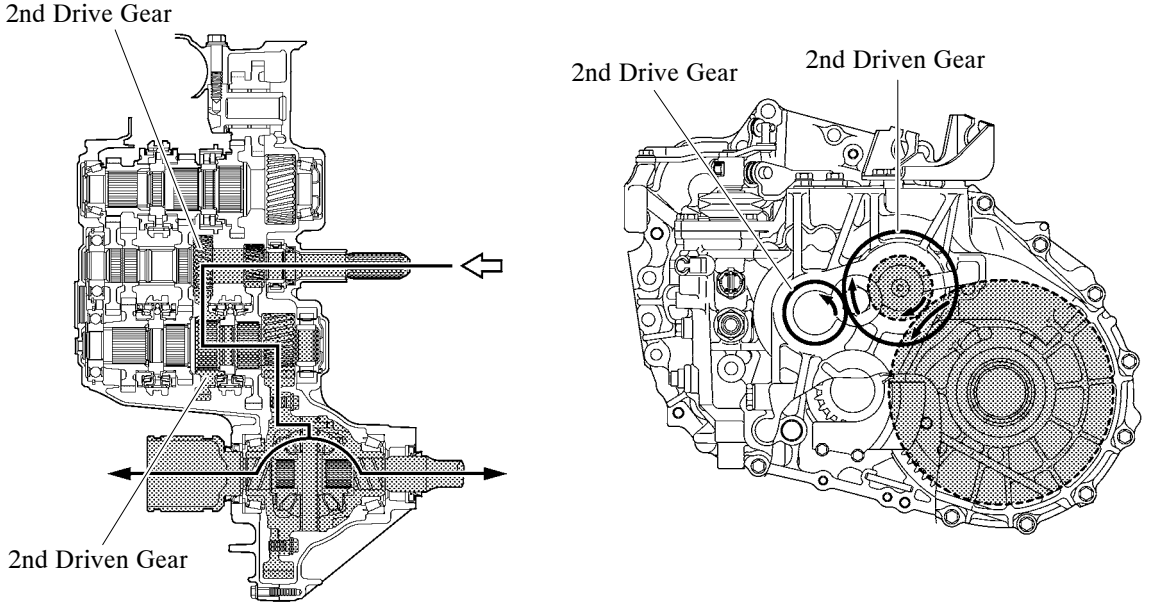

288NF07Y

3) 3rd Gear

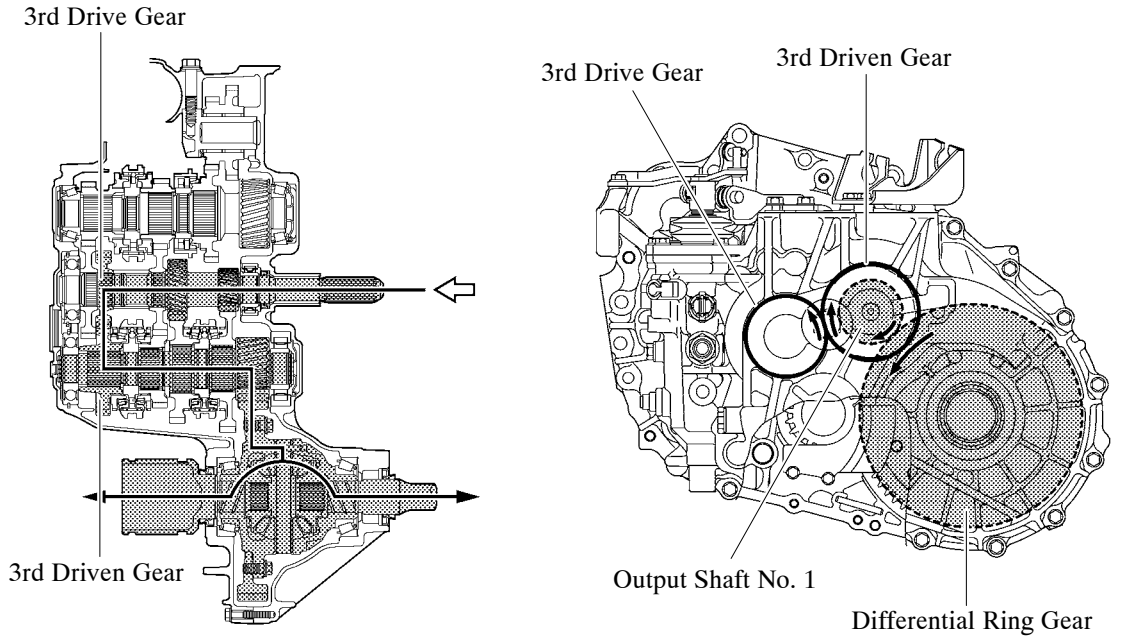

288NF08Y

4) 4th Gear

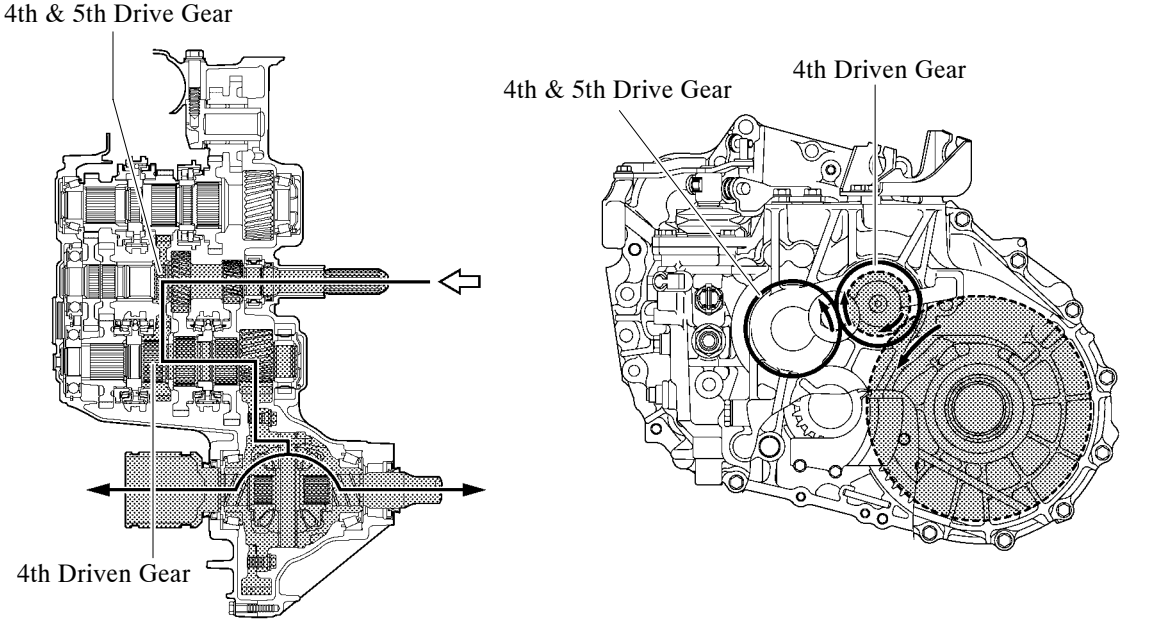

288NF09Y

5) 5th Gear

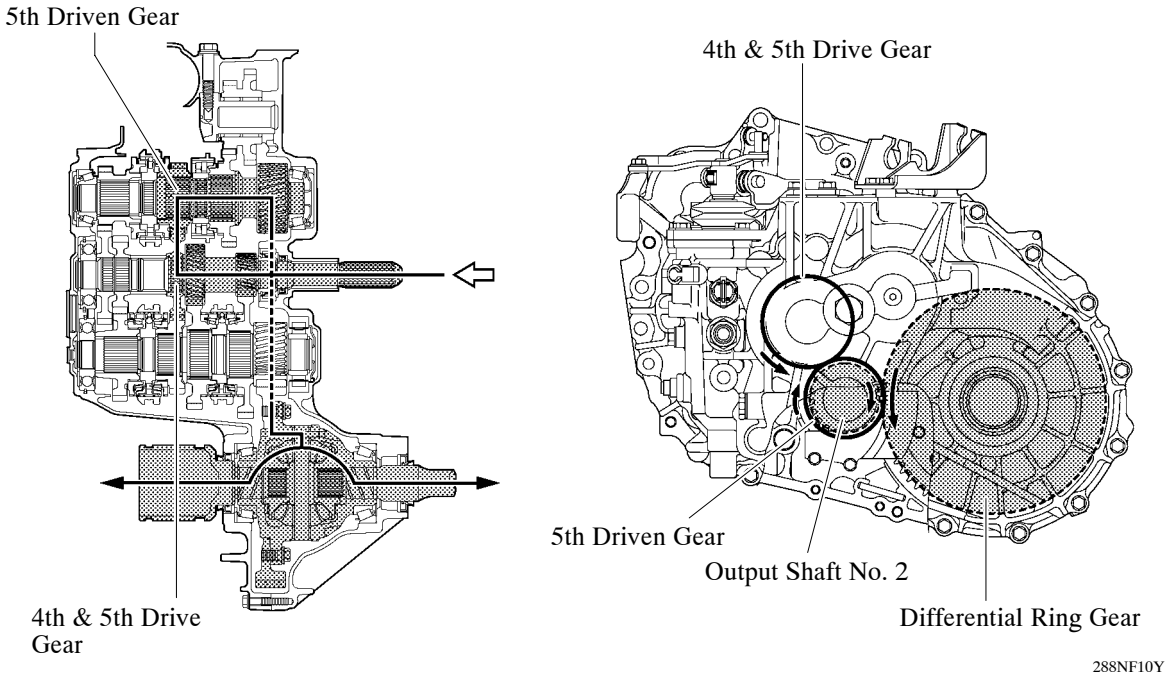

288NF10Y

6) 6th Gear

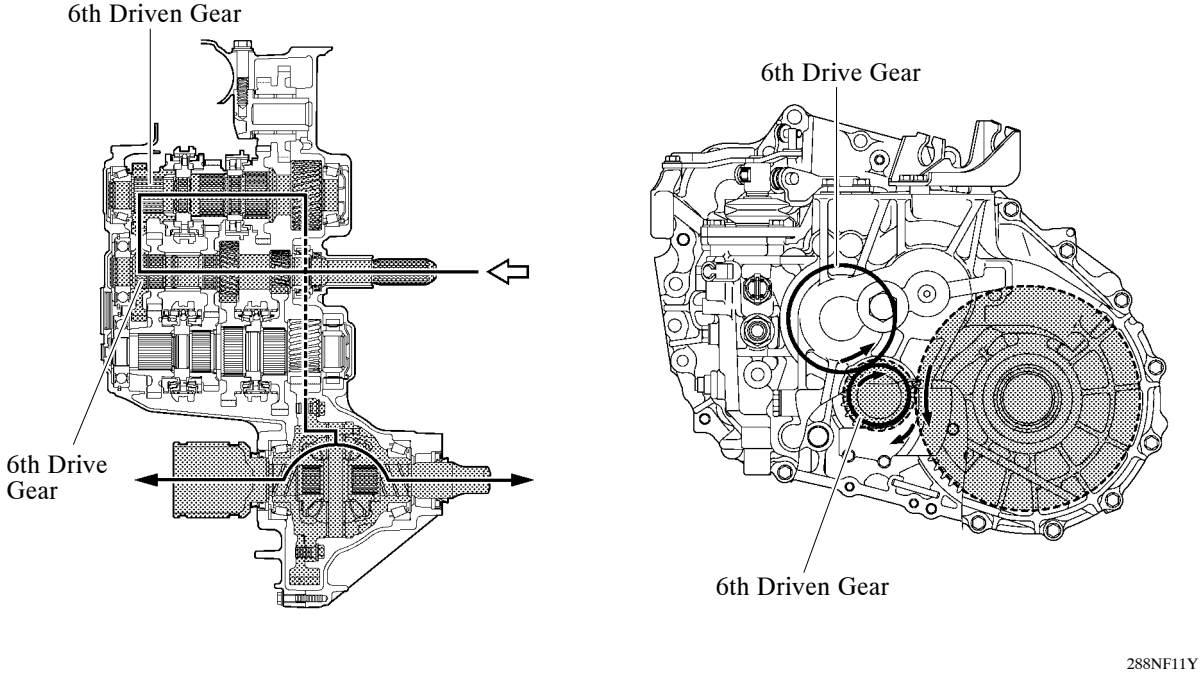

288NF11Y

7) Reverse Gear

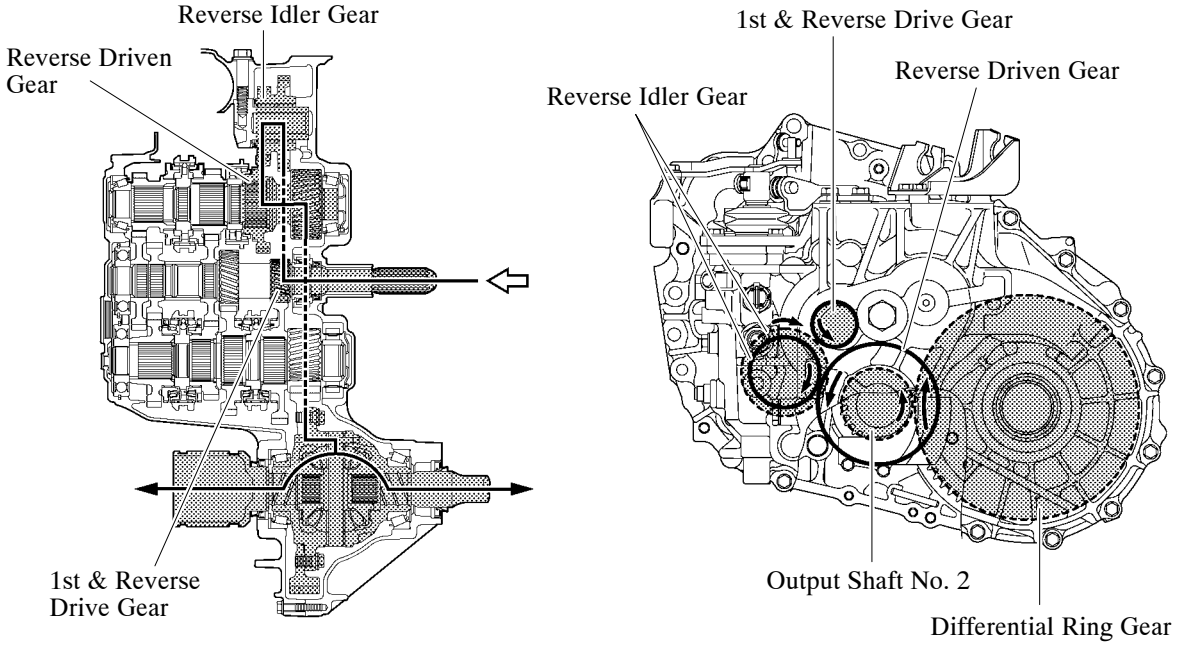

288NF24Y

■ SHIFT LEVER

The reverse miss-shift prevent mechanism prevents shifting into reverse unless the shift lock release collar provided on the shift lever is raised.

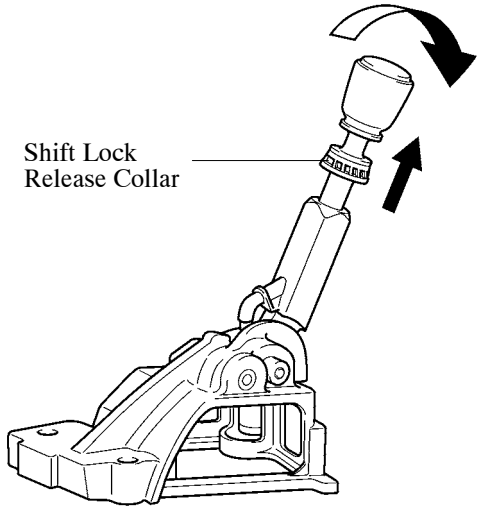

288NF12Y

7) Reverse Gear

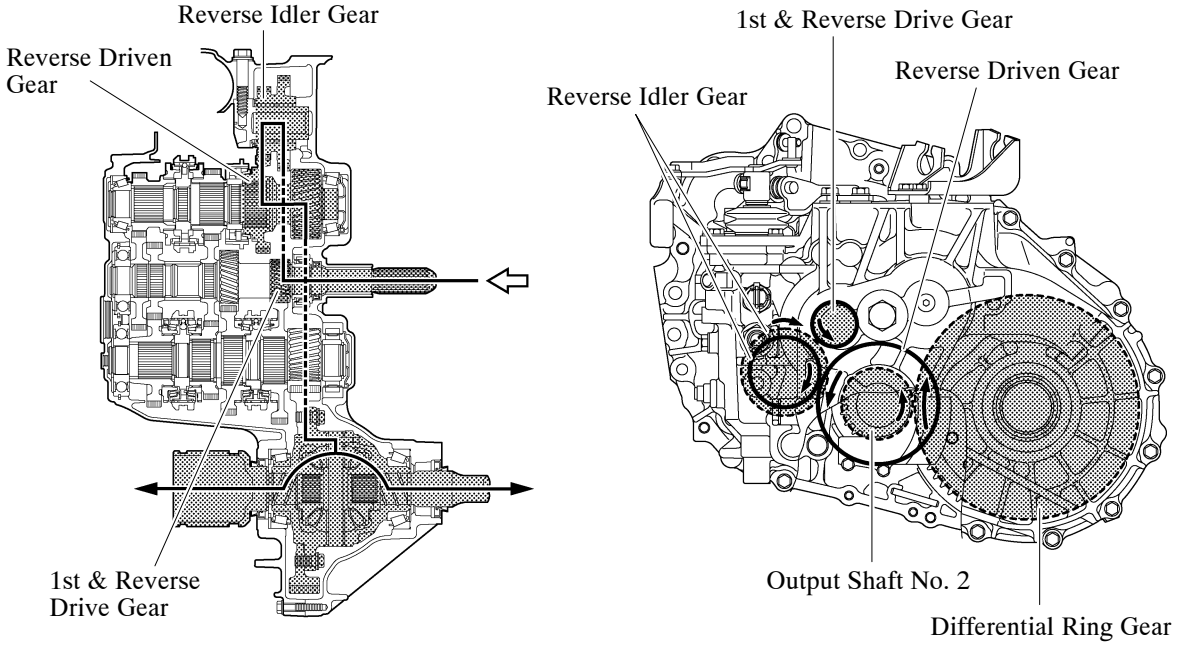

288NF24Y

■ SHIFT LEVER

The reverse miss-shift prevent mechanism prevents shifting into reverse unless the shift lock release collar provided on the shift lever is raised.

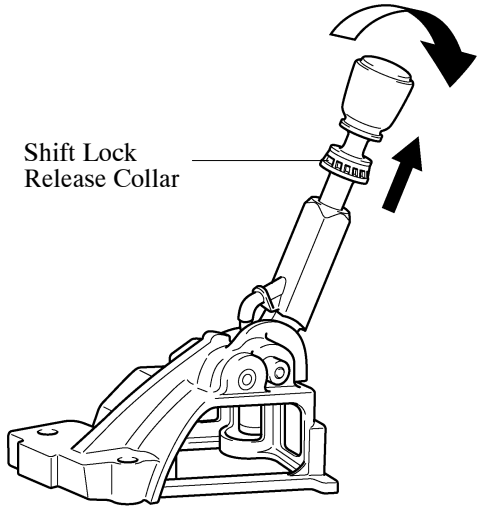

288NF12Y